MILITARY SPECIFICATION SHEET

INTERCONNECTION BOX, FIBER OPTIC, SUBMERSIBLE, 308 4 X 609 6 MM

This specification is approved for use by all Departments and Agencies of the Department of Defense

The requirements for acquiring the product described herein shall consist of this specification sheet and the issue of the following specification listed in that issue of the Department of Defense Index of Specifications and Standards (DODISS) specified in the solicitation: MIL-I-24728

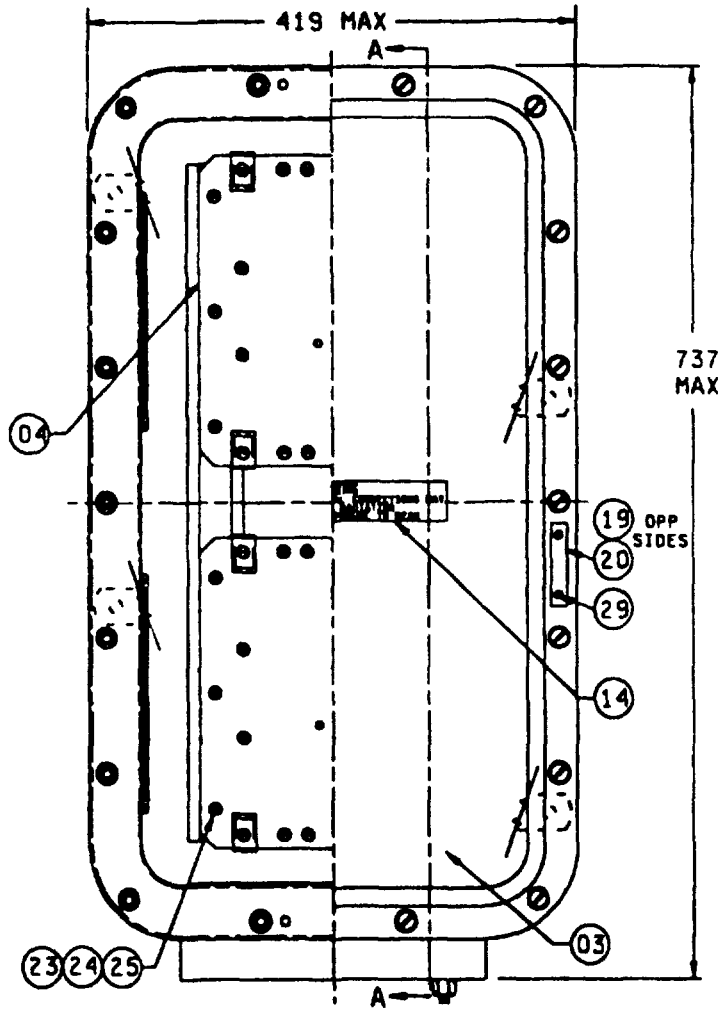

ABOVE COVER SHOWN PARTIALLY REMOVED

FIGURE 1 Enclosure assembly, M24728/2-005 and M24728/2 006

DISTRIBUTION STATEMENT A Approved for public release distribution is unlimited

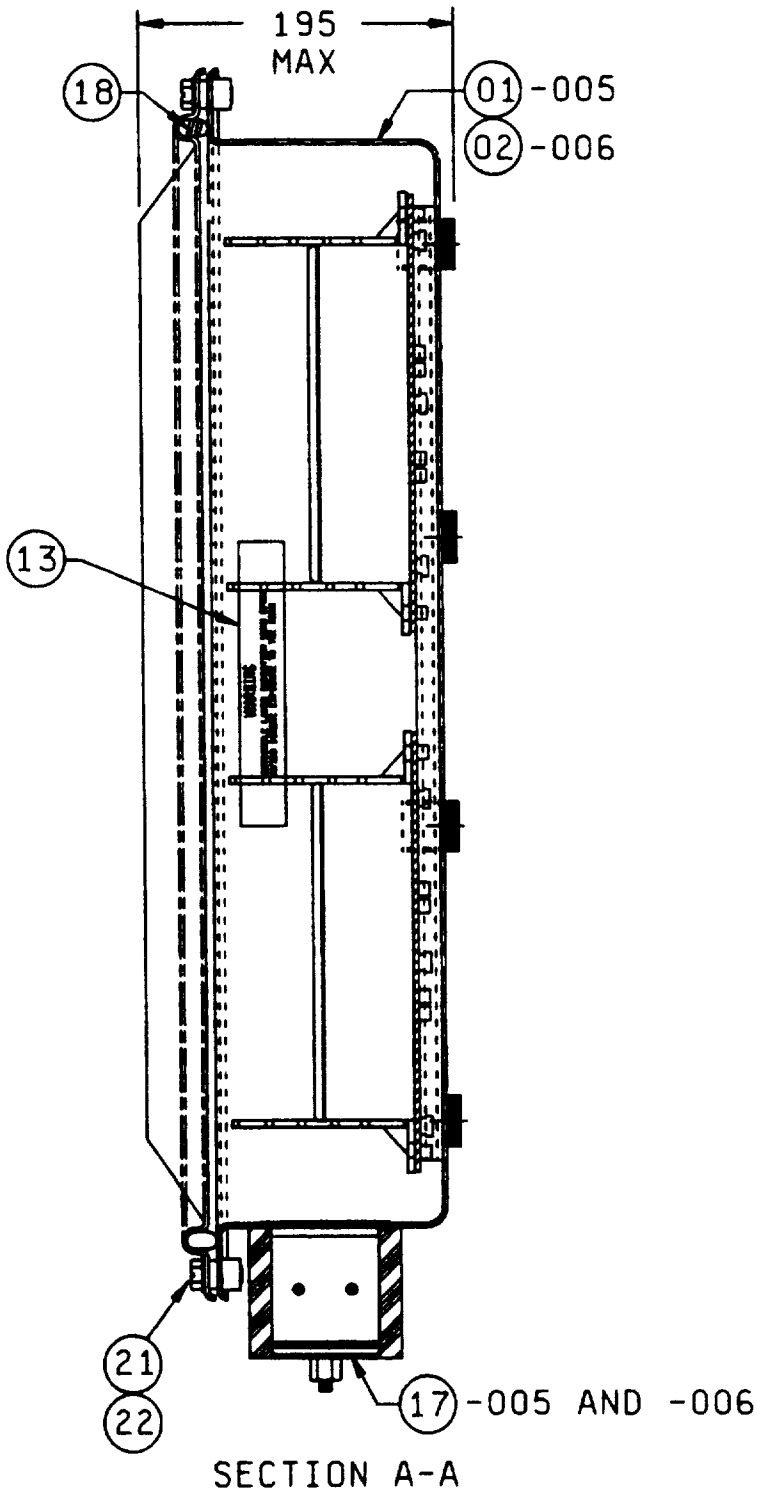

FIGURE 1 Enclosure assembly, M24728/2-005 and M24728/2-006 - Continued

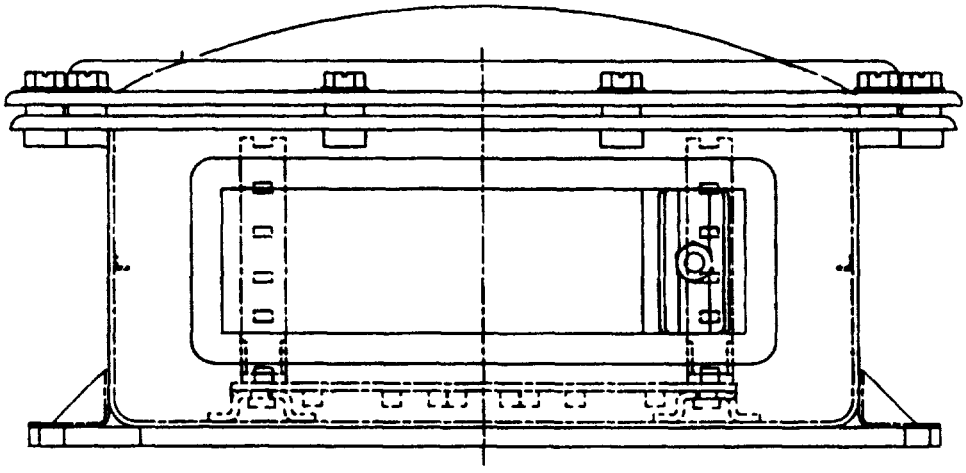

mm	Inches
195	7 7
419	16 5
737	29 0

NOTES
1 Dimensions are in millimeters
2 Inch-pound equivalents are given for general information only
3 Unless otherwise specified, tolerance is ±3 mm (.12 inches)
4 For identification of subcomponent parts (circled numbers), see table 1

FIGURE 1 Enclosure assembly, M24728/2-005 and M24728/2-006 Continued

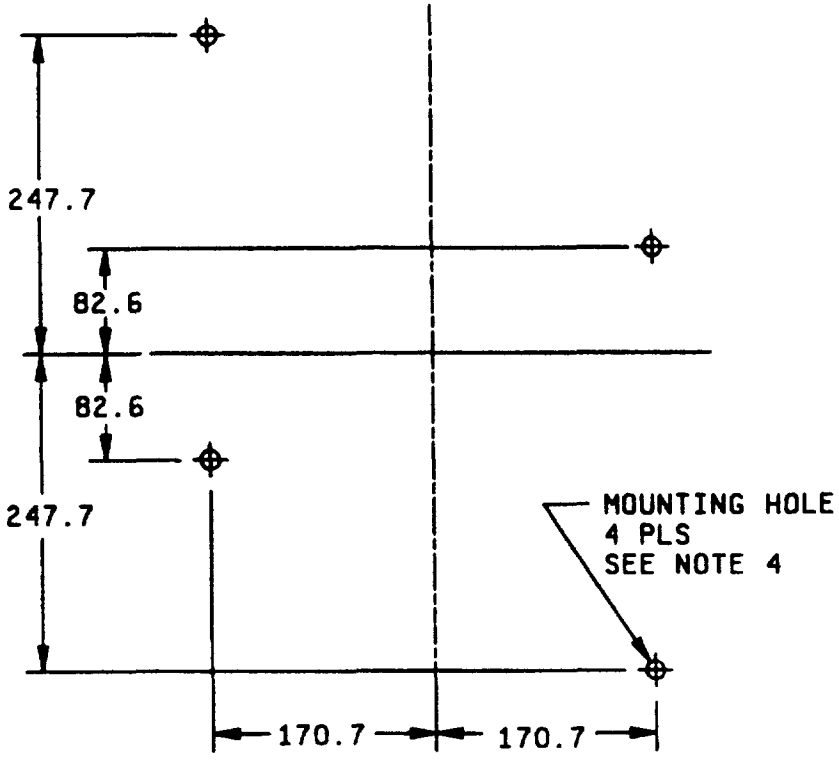

mm	Inches
82 6	3 25
170 7	6 72
247 7	9 75

NOTES
1 Dimensions are in millimeters
2 Inch-pound equivalents are given for general information only
3 Unless otherwise specified, tolerance is ± 3 mm (01 inch) for 1 place decimals
4 Mounting holes shall accommodate M12 7 X 1 95 (50 13) bolts

FIGURE 2 Box mounting hole dimensions

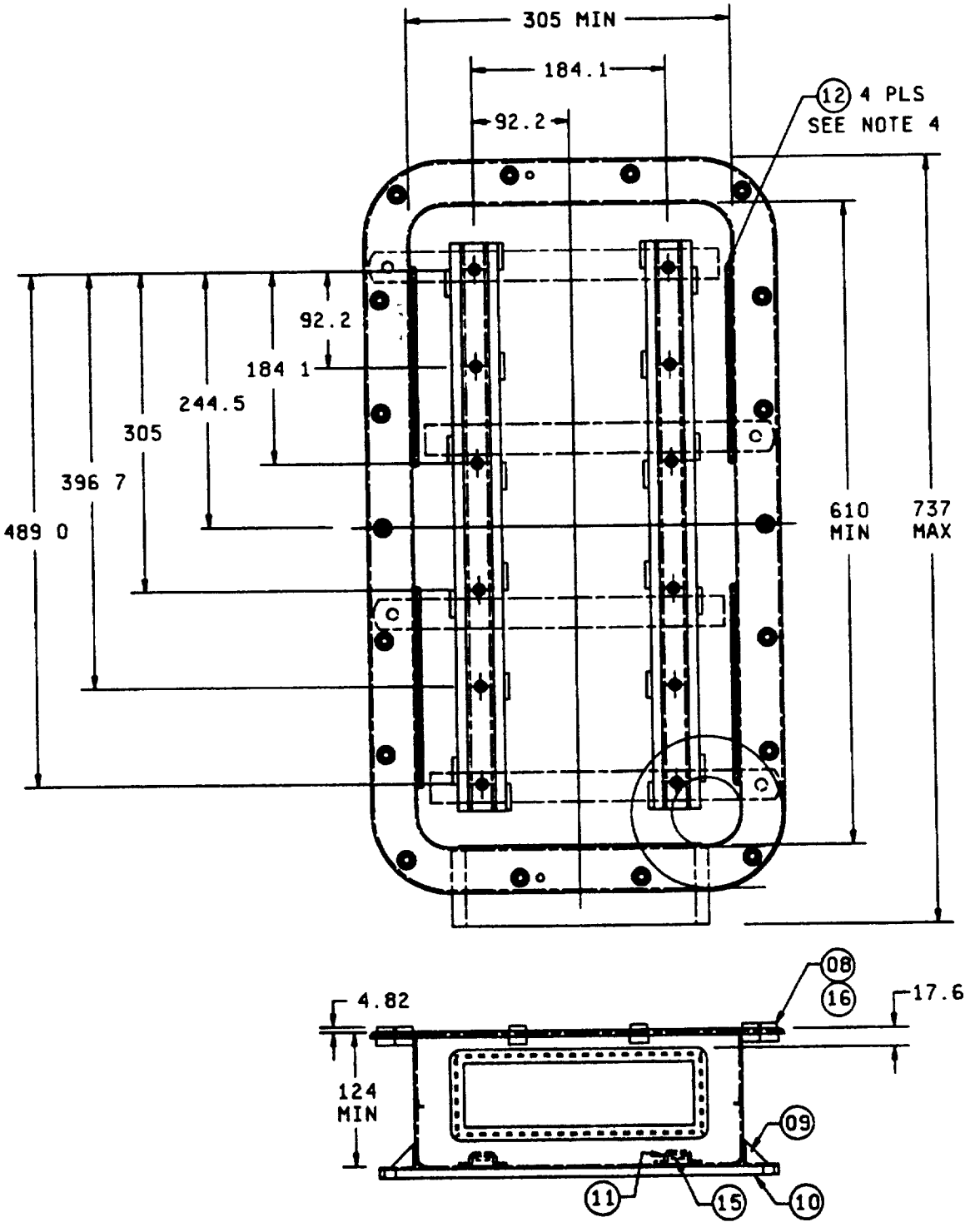

FIGURE 3 Box assembly

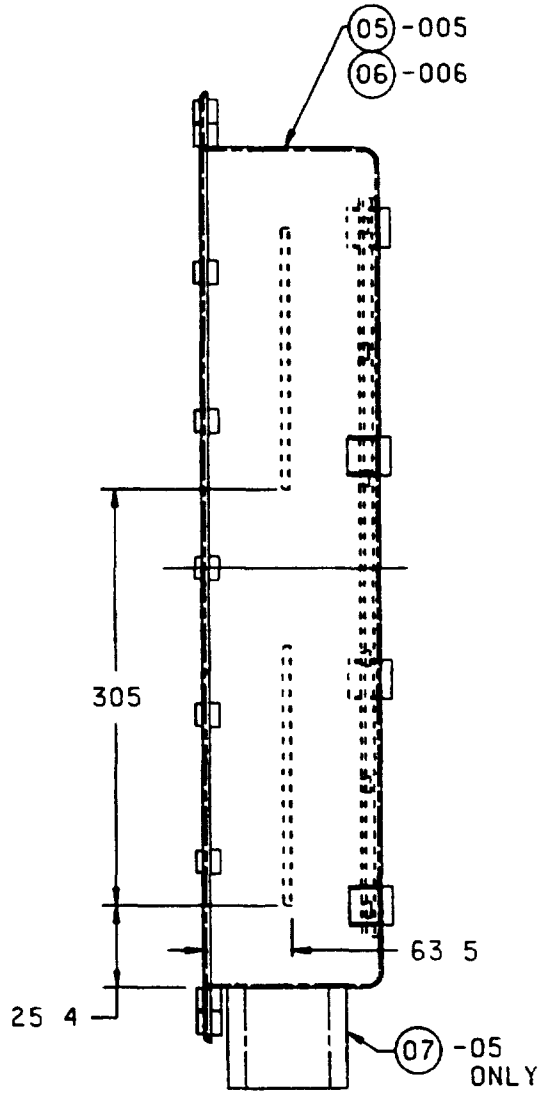

mm	Inches	mm	Inches
4 82	190	184 1	7 25
17 6	69	305	12 01
25 4	1 00	396 7	15 62
63 5	2 50	489	19 25
92 2	3 63	610	24 0
124 0	4 9	737	29 0

NOTES
1 Dimensions are in millimeters
2 Inch-pound equivalents are given for general information only
3 Unless otherwise specified, tolerance is ±3 0 mm (12 inch), ± 3 mm (01 inch) for whole numbers for 1 place decimals, and ± 13 mm (005 inch) for 2 place decimals A tolerance of ± 8 mm (03 inch) is acceptable on dimensions controlled by welding or brazing, providing that this tolerance does not interfere with the interchangeability of assemblies or parts
4 Circled numbers are subcomponent identification numbers, see table I

FIGURE 3 Box assembly Continued

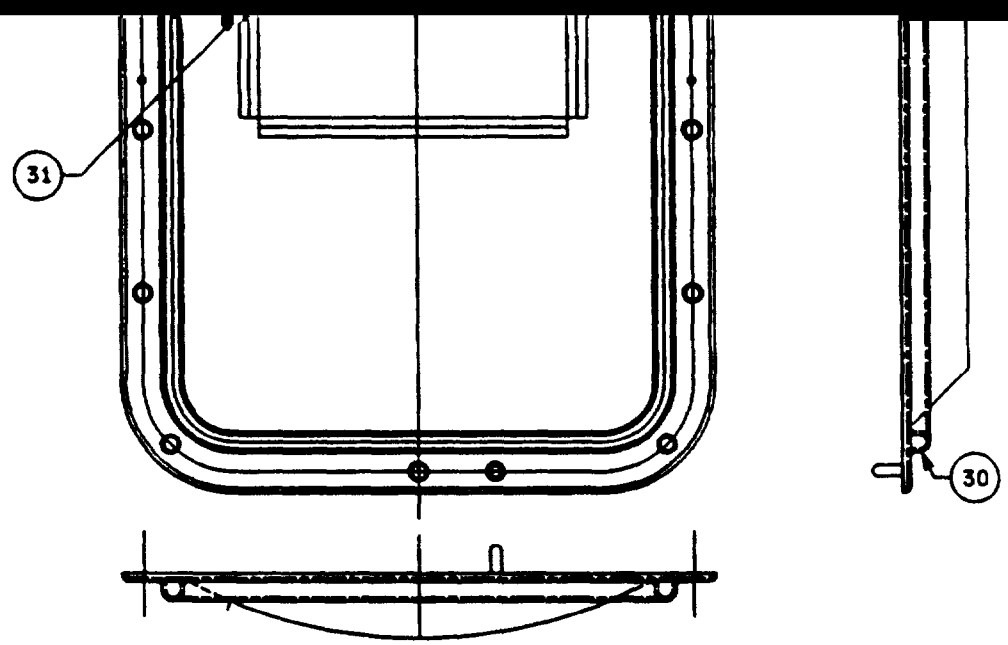

NOTES
1 Detailed layout and placement of diagram holder is not specified
2 Circled numbers are subcomponent identification numbers, see table I

FIGURE 4 Cover assembly

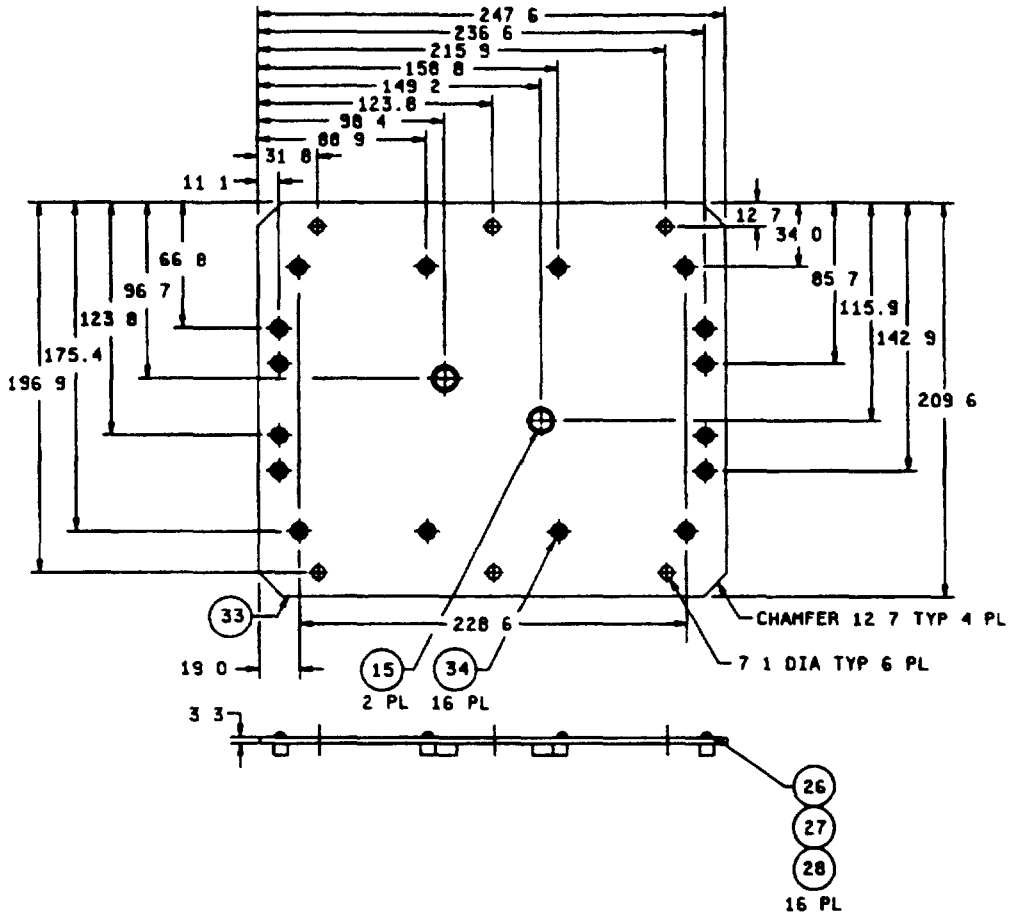

mm	Inches	mm	Inches	mm	Inches
3 3	13	88 9	3 50	175 4	6 91
7 1	28	96 7	3 69	196 9	7 75
11 2	44	98 4	3 88	209 6	8 25
12 7	50	115 9	4 56	215.9	8 50
19 0	75	123 8	4 88	228 6	9.00
31 8	1 25	142 9	5 63	236 6	9 31
34 0	1 34	149 2	5 88	247 6	9 75
64 1	2 53	158 8	6 25		
85 7	3 38				

NOTES
1 Dimensions are in millimeters
2 Inch-pound equivalents are given for general information only
3 Unless otherwise specified, tolerance is ± 3 mm (01 inch) for 1 place decimals
4 Circled numbers are subcomponent identification numbers, see table I

FIGURE 5 Mounting plate assembly

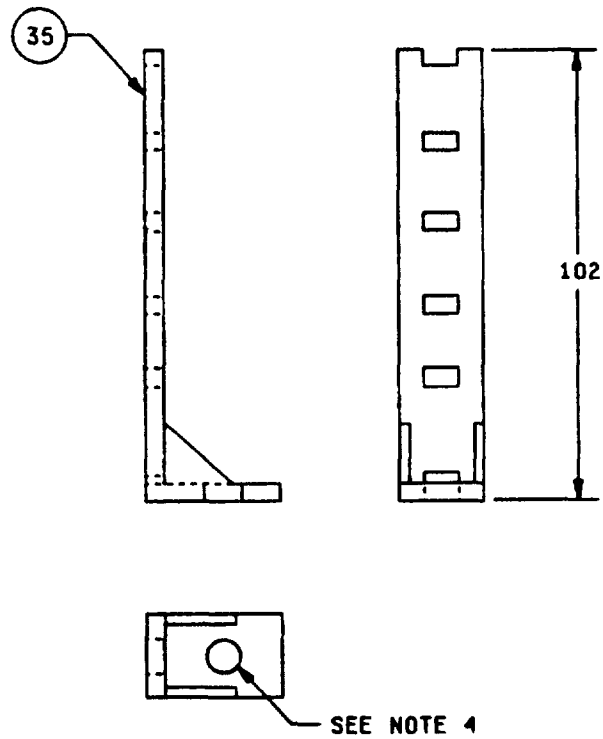

mm	Inches
102	4 0

NOTES
1 Dimensions are in millimeters
2 Inch-pound equivalents are given for general information only
3 Unless otherwise specified, tolerance is ±3 mm (12 inch).
4 Hole is 5 6 mm (22 inch) diameter
5 Circled number is subcomponent identification number, see table I

FIGURE 6 Tie wrap post

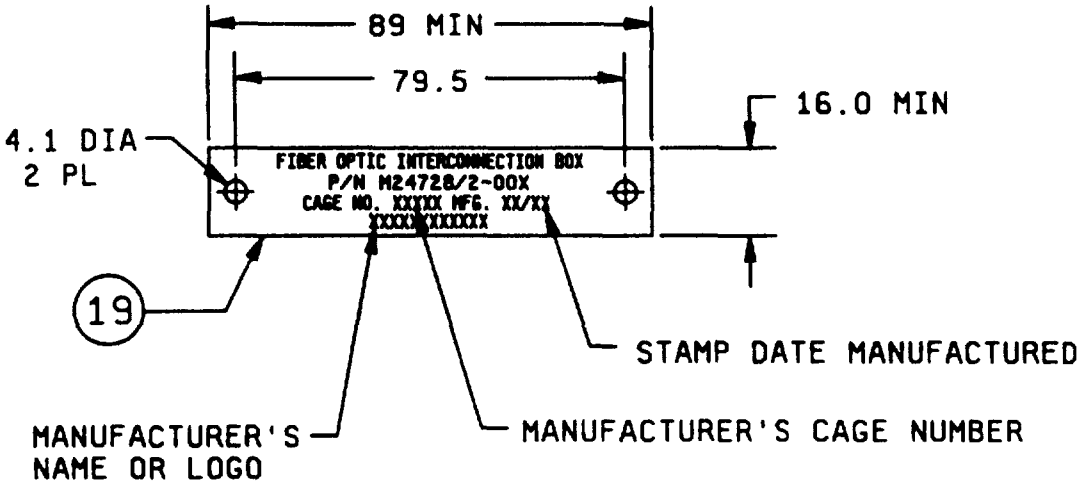

mm	Inches
4 1	16
16 0	63
79 5	3 13
89	3 5

NOTES
1 Dimensions are in millimeters
2 Inch-pound equivalents are given for general information only
3 Unless otherwise specified, tolerance is ±3 mm (12 inch) for whole numbers and ± 3 mm (01 inch) for 1 place decimals
4 Circled number is subcomponent identification number, see table I

FIGURE 7 Identification plate

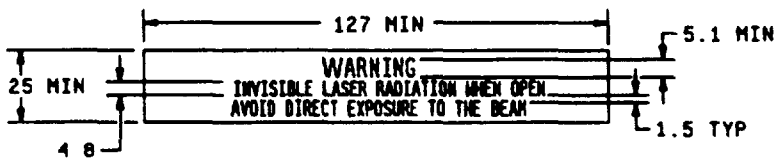

mm	Inches
1 5	06
4.8	19
5 1	.20
25	1 0
127	5 0

NOTES
1 Dimensions are in millimeters
2 Inch pound are given for general information only
3 The signal word "WARNING" shall be in yellow on a black background in the upper panel The lower panel shall consist of black letters on a yellow background
4 Unless otherwise specified, tolerance is ±3 mm (12 inch) for whole numbers and ± 3 mm (01 inch) for 1 place decimals

FIGURE 8 Inside warning label

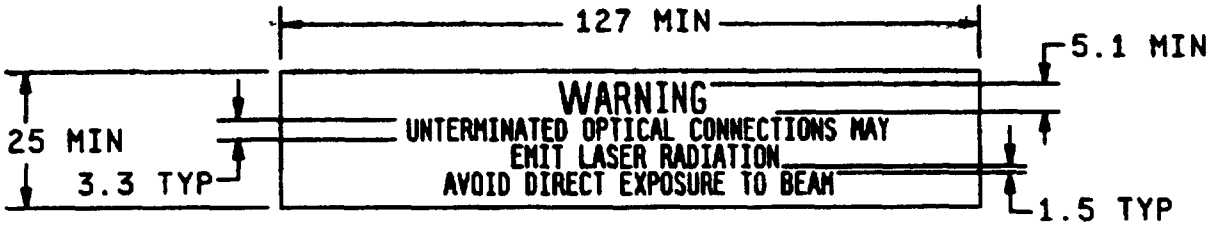

mm	inches
1 5	06
3 3	13
5 1	20
25	1 0
127	5 0

NOTES
1. Dimensions are in millimeters.
2. Inch-pound equivalents are given for general information only
3. The signal word "WARNING" shall be in yellow on a black background in the upper panel The lower panel shall consist of black letters on a yellow background
4. Unless otherwise specified, tolerance is ±3 mm (12 inch) for 1 whole numbers and ± 3 mm (01 inch) for 1 place decimals

FIGURE 9 Outside warning label

TABLE I Parts list

Subcomponent identification numbers, circled (see figures 1 through 9)	Part name	PIN M24728/2		Subassembly number				Remarks and reference figures
		005	006	01	02	03	04	
01	Box assembly with MCT frame	1		1				1 and 3
02	Box assembly without MCT frame		1		1			1 and 3
03	Cover assembly	1	1			1		1 and 4
04	Mounting plate assembly	2	2				1	5
05 1/ 2/	308.4 X 609 6 Box with MCT frame			1				3
06 1/ 2/	308.4 X 609 6 Box without MCT frame				1			3
07 3/ 4/	MCT frame			1				3
08 3/ 2/	Flange pad			18	18			3
09 2/ 5/	Gusset			4	4			3
10 3/	Mounting leg			4	4			3
11 3/	Mounting channel			2	2			3
12 3/	Tie wrap bracket			4	4			3
13 6/	Inside warning label	1	1					1 and 8
14 6/	Outside warning label	1	1					1 and 9
15 7/	M6 35 x 1 27 (25 20) insert			12	12		2	3 and 5
16 7/	M9 53 x 1 59 (375-16) helicoil			18	18			3
17 4/	MCT wedge pack	1	1					1
18 2/	Gasket	1	1					1
19 8/	Identification plate	1	1					1 and 7
20 9/	Blank nameplate	1	1					1
21 7/ 2/	M9 53 x 1 59 (375-16) hex bolt	18	18					1
22 7/	9 53 (375) flat washer	18	18					1

See footnotes at end of table

TABLE I Parts list - Continued

Subcomponent identification numbers, circled (see figures 1 through 9)	Part name	PIN M24728/2-		Subassembly number				Remarks and reference figures
		005	006	01	02	03	04	
23 7/	M6 35 x 1 27 (.25-20) X 15.9 PHMS	12	12					1
24 7/	6 35 (.25) flat washer	12	12					1
25 7/	6.35 (.25) split lock washer	12	12					1
26 7/	M4 0 x 79 (8-32) X 12 7 PHMS						12	5
27 7/	4.0 (#8) flat washer						12	5
28 7/	4.0 (#8) split lock washer						12	5
29 7/	M3.5 x .79 (6 32) X 6.35 PHMS	4	4					1
30 1/ 2/	308 4 X 609 6 cover	1	1					4
31 2/ 9/ 9/	Diagram holder					1		4
32 2/ 9/	Dowel pin					2		4
33 9/	Mounting plate						1	5
34 7/	M4 0 x 79 (8-32) insert						16	5
35	Tie wrap post	8	8					5

1/ Aluminum, 3003 or 6061 in accordance with ASTM-B-209
2/ See MIL-E-24142/6 for guidance
3/ Aluminum, 5052 H-32 or 6061 in accordance with ASTM-B-209
4/ See MIL-P 24705/1 for guidance
5/ Aluminum, 5052 H-32 or 6061 in accordance with ASTM-B-209, 2 39 mm (09 inch) thick
6/ In accordance with MIL-P-15024, type G, adhesive-backed, metal foil
7/ CRES
8/ Constructed to hold an 216 mm (8.5 inch) by 279 mm (11 0 inch) diagram
9/ Aluminum, 5052 H-32 in accordance with ASTM-B-209

REQUIREMENTS

Design and construction See figures 1 through 9, and table I

The interconnection box shall be constructed using MIL E 24142/6 010 as guidance

The MCT shall be constructed using MIL-P-24705/1 as guidance The MCT interior dimensions shall be 217 4 X 60 0 mm (8 56 X 2 36 inch)

The enclosure assembly shall be constructed using the following combinations of materials

a The box, MCT frame, flange pads, gussets, mounting legs, mounting channels, tie wrap bracket, and cover are aluminum, 6061 in accordance with ASTM-B-209

b The box and cover are aluminum, 3003 in accordance with ASTM-B 209 and the MCT frame, flange pads, gussets, mounting legs, mounting channels, and tie wrap bracket are aluminum, 5052 H 32 in accordance with ASTM-B-209

Enclosure assemblies constructed using 6061 aluminum shall not be welded

Enclosure assemblies constructed using 6061 aluminum shall be dip-brazed in accordance with MIL-B 7883, type V, grade B

Enclosure assemblies constructed using 6061 aluminum shall be artificially aged at 177°C for 12 hours to a 6061-T4 condition

Enclosure assemblies shall be class 1A conversion coated in accordance with MIL-C-5541 before being epoxy powder coated

Cable interconnection interface The cable feed-through shall be in accordance with MIL-P-24705 and shall accept cables having outer diameters between 6 1 mm (24 inch) and 25 4 mm (1 00 inch) constructed in accordance with MIL-C-85045

Enclosure assemblies shall be stress relieved in accordance with MIL-E-24142

Mass M24728/2-005 11 3 Kg (maximum)
M24728/2-006 9 1 Kg (maximum)

Interconnection box mounting See figure 2

Interconnect organization

Fiber optic diagram holders See figure 4

Fiber optic cable tie posts 8 (see figure 6)

Fiber optic splice tray holder 4 max (see MIL I-24728/7)

Fiber optic connector module 2 max (see MIL-I 24728/6)

Fiber optic splices When outfitted with two MIL I-24728/7 splice tray holders per splice module, the interconnection box shall organize up to 72 MIL-S-24623/4 fiber optic splices per splice module (maximum of two splice modules)

Fiber optic connector adapters When outfitted with MIL I-24728/6 connector modules, the interconnection box shall organize up to 48 MIL C 83522/17 connector adapters (maximum of two connector modules)

Cable retention Not applicable

Cable seal flexing Not applicable

Cable twist Not applicable

Compression resistance Not applicable

Impact Not applicable

Water pressure The applied pressure shall be 44 8 kilopascals (6 5 PSI) (equivalent to a depth of 15 ft) The interconnection cover bolts and the MCT wedge pack nut shall be tightened to a minimum torque of 16 94 N m (150 in lbs) during this test

Flammability Not applicable

Salt spray Not applicable

Flame spread Not applicable

Fungus test shall be conducted only on polymeric materials

The operating temperature range shall be -54°C to +65°C and the storage range shall be -62°C to +85°C

Part or Identifying Number (PIN) See table I

M24728/1-005, box, mounting plates, and lid, with cable entrance and wedge pack

M24728/1-006, box, mounting plates, and lid, without cable entrance

M24728/2-001, M24728/2-002, M24728/2-003 and M24728/2-004 have been cancelled without replacement

The gasket size shall be 314.3 mm (12 375 inch) wide X 619 12 mm (24 375 inch) long This corresponds to PIN M24142/6-010 of MIL-E-24142/6

Insert blocks compatible with the MCT frame are specified in MIL-P 24705/1

The US Government preferred system of measurement is the metric SI system However since this item was originally designed using inch-pound units of measurement, in the event of conflict between the metric and inch-pound units, the inch-pound units shall take precedence

CONCLUDING MATERIAL

Custodians
Army - CR
Navy - SH
Air Force 85
NASA - NA

Review activities
Army - MI
Navy - AS, EC, YD
Air Force - 17, 19, 80, 99
DLA - ES

Preparing activity
Navy - SH

Agent
DLA - ES

(Project 6099-0004-02)