MILITARY SPECIFICATION SHEET

INTERCONNECTION BOX FIBER OPTIC, SUBMERSIBLE, 406 4 x 863 6 mm

This specification is approved for use by all Departments and Agencies of the Department of Defense

The requirements for acquiring the product described herein shall consist of this specification sheet and the issue of the following specification listed in that issue of the Department of Defense Index of Specifications and Standards (DODISS) specified in the solicitation MIL-I-24728

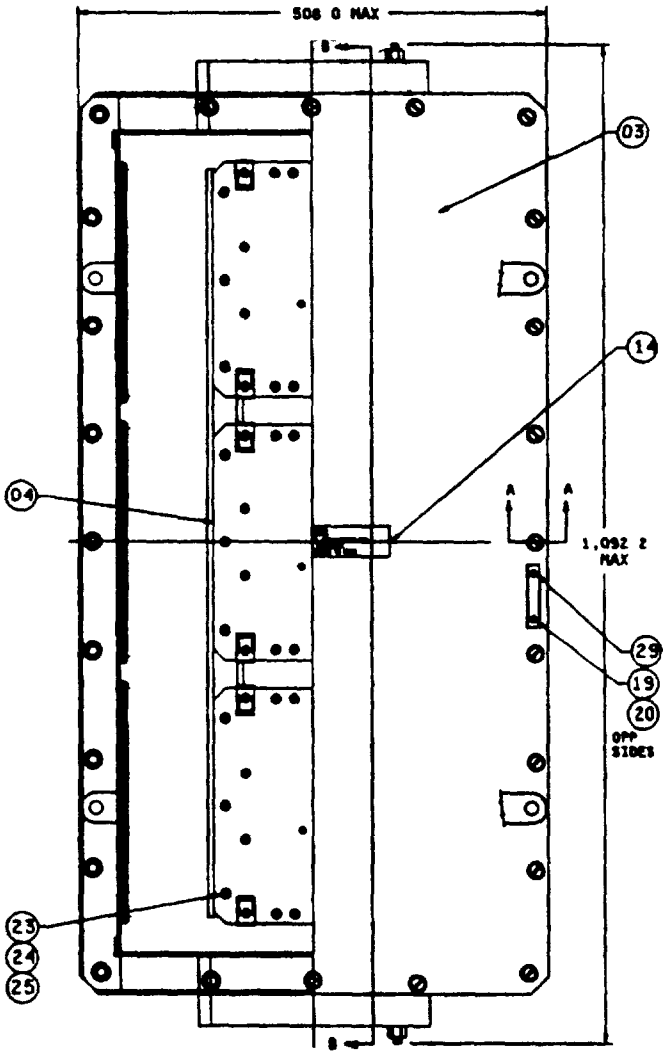


ABOVE COVER SHOWN PARTIALLY REMOVED

FIGURE 1 Enclosure assembly, M24728/3-001 and M24728/3-004


DISTRIBUTION STATEMENT A Approved for public release distribution is unlimited

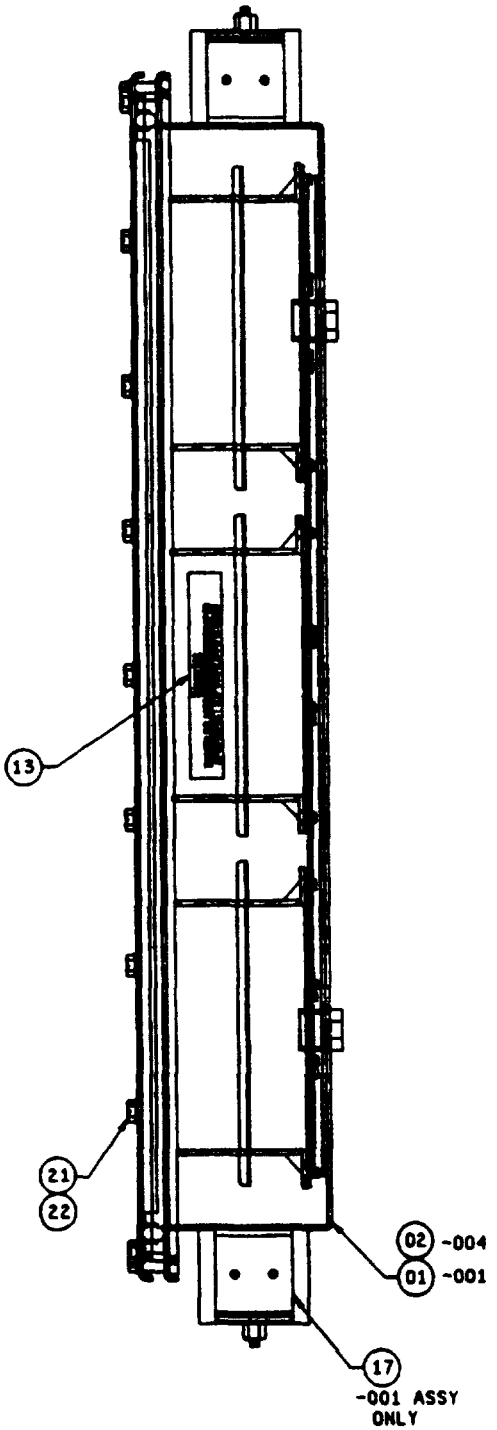


SECTION B-B

FIGURE 1 Enclosure assembly, M24728/3-001 and M24728/3-004 Continued

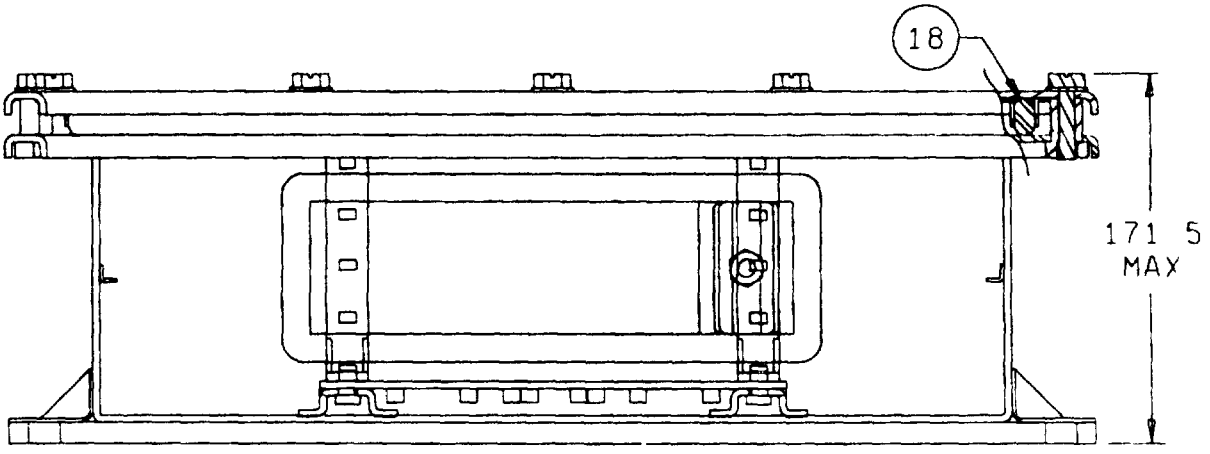


SECTION A-A

| mm | Inches |
|---|---|
| 171 5 | 6 75 |
| 508 0 | 20 00 |
| 1092 2 | 43 00 |

NOTES
1 Dimensions are in millimeters.
2 Inch-pound equivalents are given for information only
3 Unless otherwise specified, tolerance is ±2 5 mm ( 1 inch) for one-place decimals, and ±0.3 mm ( 01 inch) for two-place decimals
4 For identification of subcomponent parts, see table I

FIGURE 1 Enclosure assembly, M24728/3-001 and M24728/3-004 - Continued

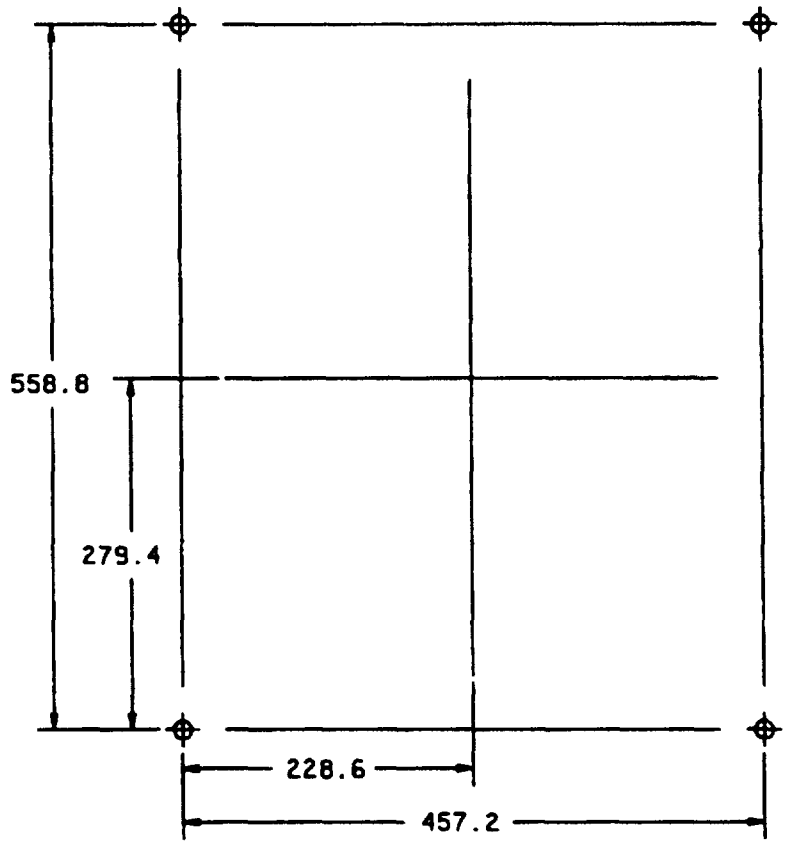


| mm | Inches |
|---|---|
| 12 7 | 50 |
| 228 6 | 9 00 |
| 279 4 | 11 00 |
| 457 2 | 18 00 |
| 558 8 | 22 00 |

NOTES
1 Dimensions are in millimeters
2 Inch-pound equivalents are given for information only
3 Unless otherwise specified, tolerance is ±0 3 mm ( 01 inch) for two-place decimals
4 Mounting holes shall accomodate M12 7 X 1 95 ( 50 13) bolts

FIGURE 2 Box mounting dimensions

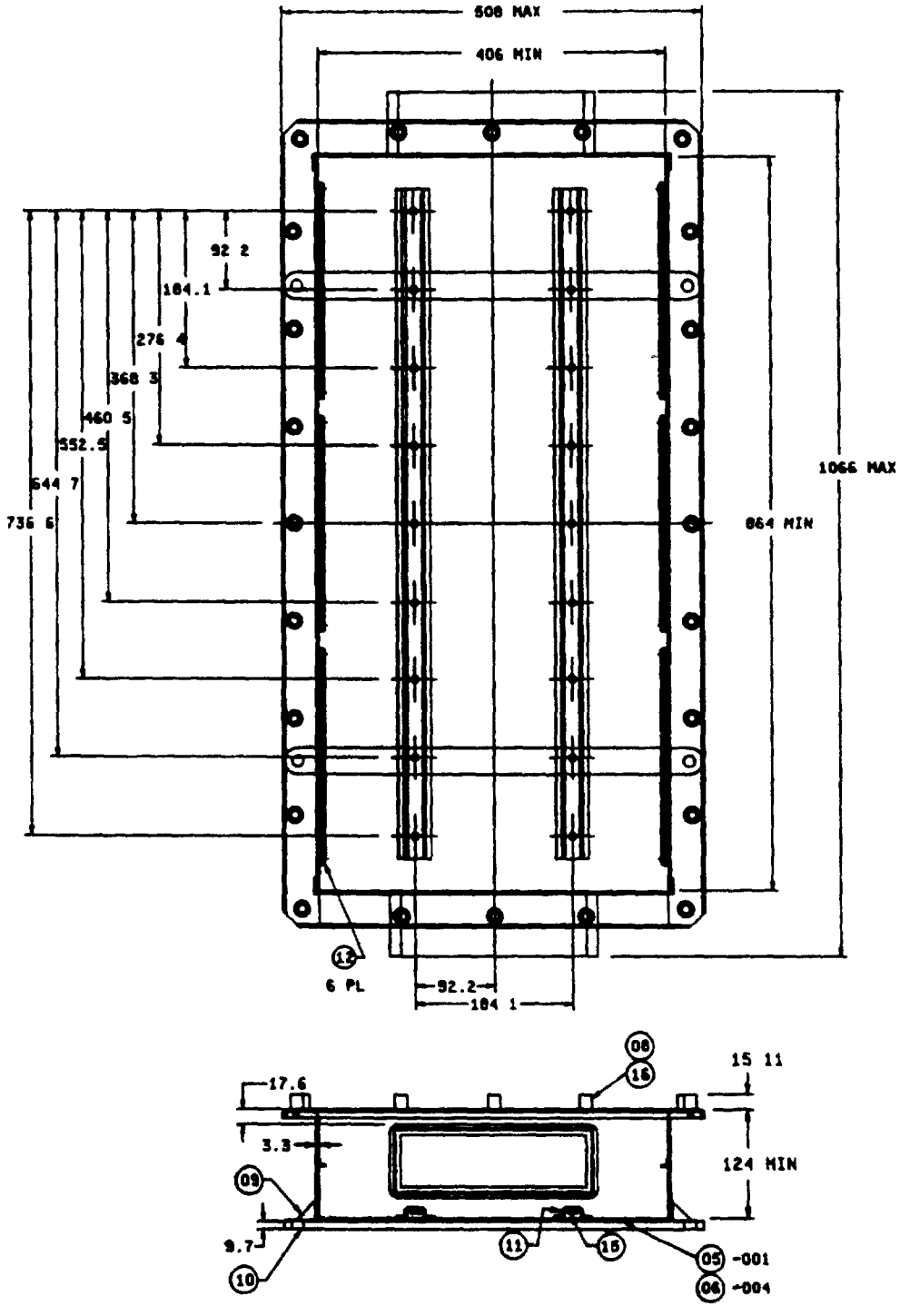


FIGURE 3 Box assembly

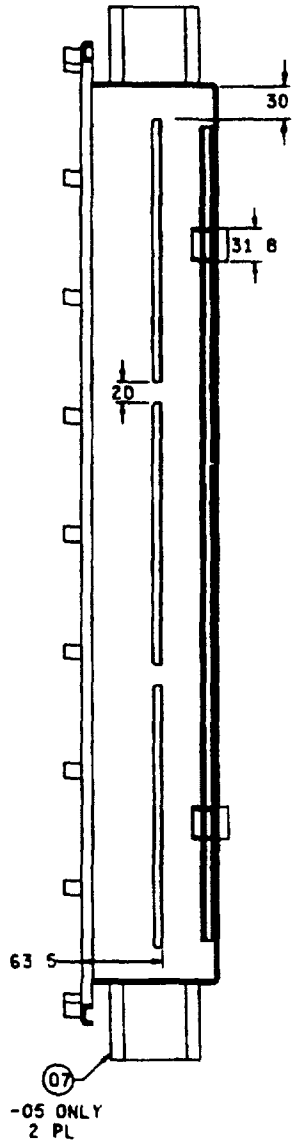


| mm | Inches | mm | Inches | mm | Inches |
|---|---|---|---|---|---|
| 3 3 | 13 | 63 5 | 2 50 | 460 5 | 18 13 |
| 9 7 | 38 | 92 2 | 3 63 | 508 | 20 0 |
| 15 11 | 595 | 124 | 4 9 | 552 5 | 21 75 |
| 17 6 | 69 | 184 1 | 7 25 | 644 7 | 25 38 |
| 20 | 8 | 276.4 | 10 88 | 736 6 | 29 00 |
| 30 | 1 2 | 368 3 | 14 50 | 864 | 34 0 |
| 31 8 | 1 25 | 406 | 16 0 | 1066 | 42 0 |

NOTES
1 Dimensions are in millimeters
2 Inch-pound equivalents are given for information only
3 Unless otherwise specified, tolerance is ±2 5 mm ( 1 inch) for one-place decimals, ±0 3 mm ( 01 inch) for two-place decimals, and ±0 13 mm ( 005 inch) for three-place decimals A tolerance of ±0 8 mm ( 03 inch) is acceptable on dimensions controlled by welding or brazing, providing that this tolerance does not interfere with the interchangeability of assemblies or parts

FIGURE 3 Box assembly Continued

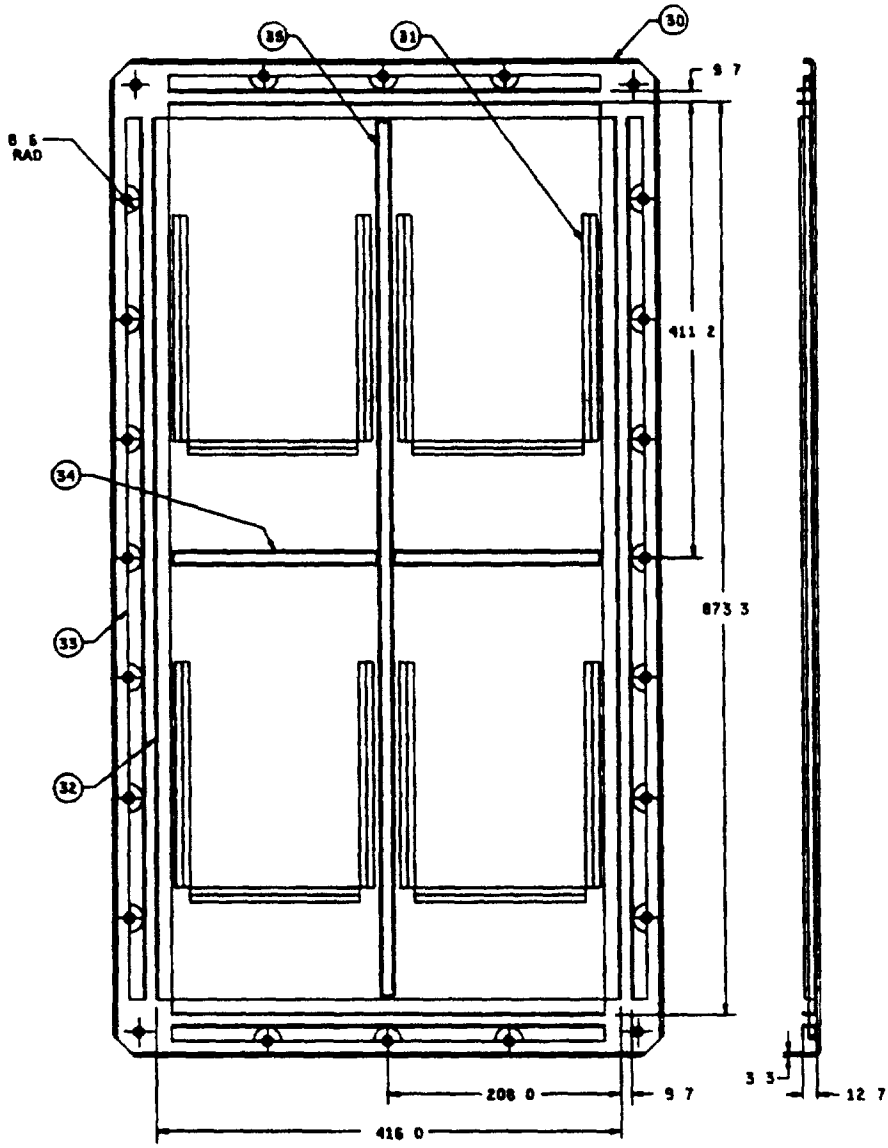


| mm | Inches |
|---|---|
| 3 3 | 13 |
| 8 6 | 34 |
| 9 7 | 38 |
| 12 7 | 50 |
| 208 0 | 8 19 |
| 411 2 | 16 19 |
| 416 0 | 16 38 |
| 822 5 | 32 38 |

NOTES
1 Dimensions are in millimeters
2 Inch-pound equivalents are given for information only
3 Unless otherwise specified, tolerance is ±0 3 mm ( 01 inch) for two-place decimals
4 Detailed layout and placement of diagram holders is not specified

FIGURE 4 Cover assembly

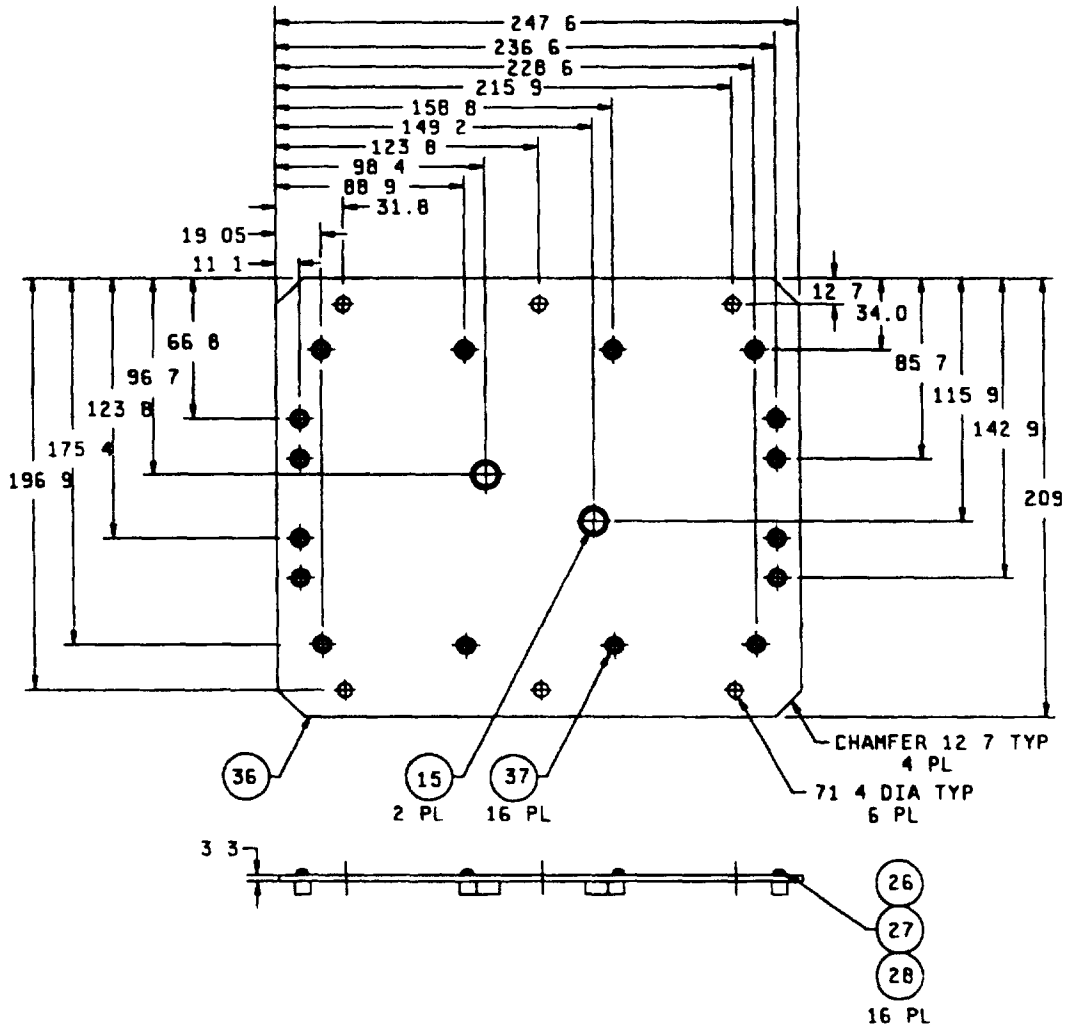


| mm | Inches | mm | Inches |
|---|---|---|---|
| 3 3 | 13 | 98 4 | 3 88 |
| 7 1 | 28 | 115 9 | 4 56 |
| 11 1 | 44 | 123 8 | 4.88 |
| 12 7 | 50 | 142 9 | 5 63 |
| 19 05 | 75 | 149 2 | 5 88 |
| 31 8 | 1 25 | 158 8 | 6 25 |
| 34 0 | 1 34 | 175 4 | 6 91 |
| 64 1 | 2 53 | 196.9 | 7.75 |
| 66 8 | 2 63 | 209 6 | 8 25 |
| 85 7 | 3 38 | 228 6 | 9 00 |
| 88 9 | 3 50 | 236 6 | 9 31 |
| 96.7 | 3 69 | 247 6 | 9 75 |

NOTES
1 Dimensions are in millimeters
2 Inch-pound equivalents are given for information only
3 Unless otherwise specified, tolerance is ±0 3 mm ( 01 inch) for two-place decimals and ±0 13 mm ( 005 inch) for three-place decimals
4 Tie wrappost is shown in figure 6

FIGURE 5 Mounting plate assembly

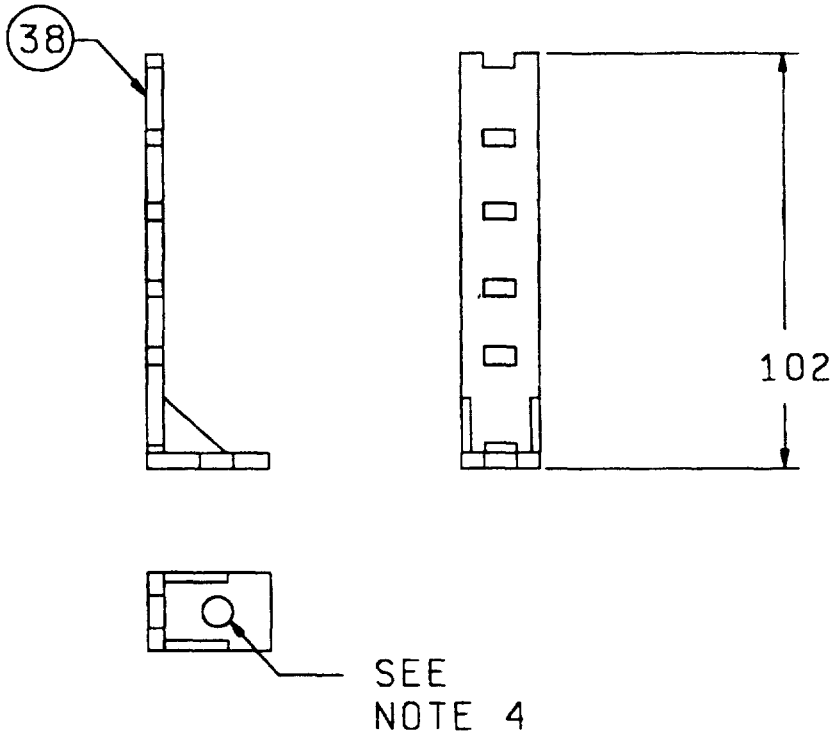


| mm | Inches |
|---|---|
| 102 | 4 0 |

NOTES
1 Dimensions are in millimeters
2 Inch-pound equivalents are given for information only
3 Unless otherwise specified, tolerance is ±2.5 mm ( 1 inch) for one-place decimals
4 Hole is 5 6 mm ( 22 inch) diameter

FIGURE 6. Tie wrap post

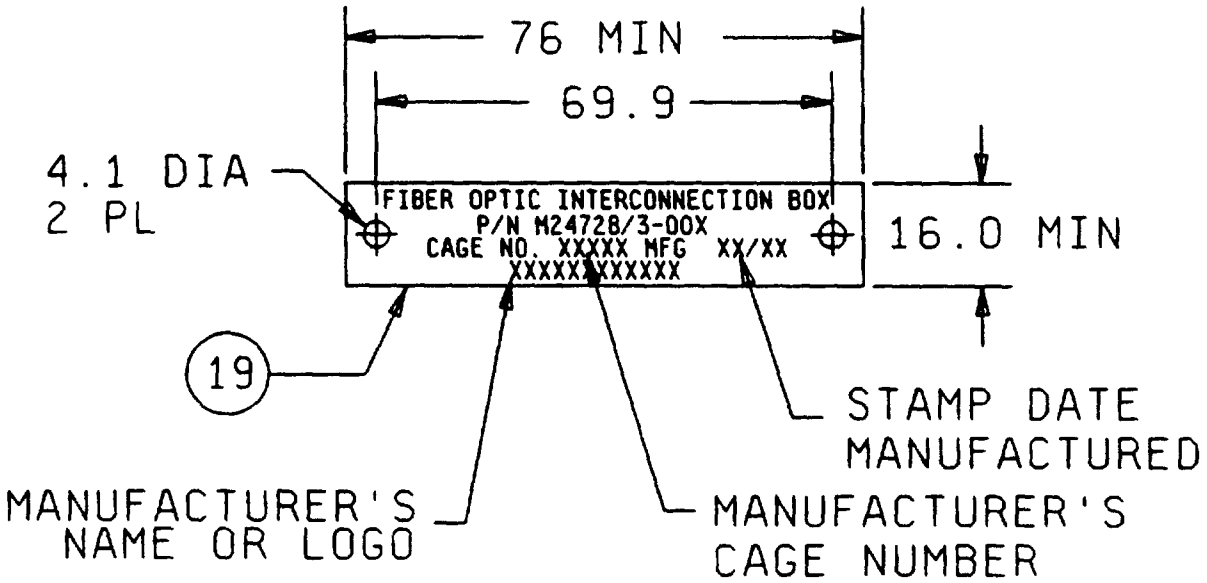


| mm | Inches |
|---|---|
| 4 1 | 16 |
| 16 0 | 63 |
| 69 9 | 2 75 |
| 76 | 3 0 |

NOTES
1 Dimensions are in millimeters
2 Inch-pound are given for information only
3 Unless otherwise specified, tolerance is ±2 5 mm ( 1 inch) for one-place decimals and ±0 3 mm ( 01 inch) for two-place decimals

FIGURE 7 Identification plate

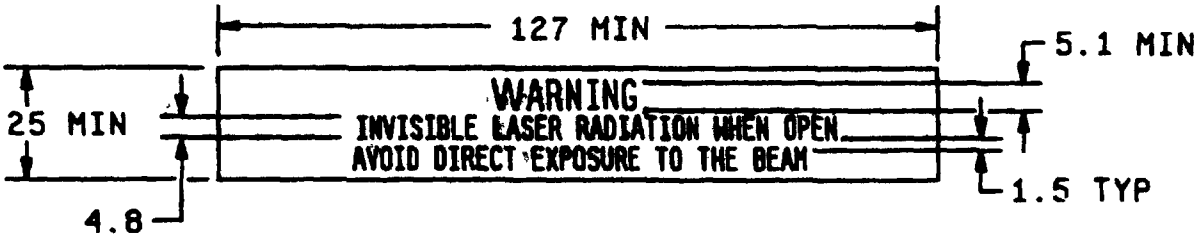


| mm | Inches |
|---|---|
| 1 5 | 06 |
| 4.8 | 19 |
| 5 1 | 20 |
| 25 4 | 1 00 |
| 127 | 5 0 |

NOTES·

1 Dimensions are in millimeters
2 Inch-pound equivalents are given for information only
3 The signal word "WARNING" shall be in yellow on a black background in the upper panel The lower panel shall consist of black letters on a yellow background
4 Unless otherwise specified, tolerance is ±2 5 mm ( 1 inch) for one-place decimals and ±0 3 mm ( 01 inch) for two-place decimals

FIGURE 8 Inside warning label

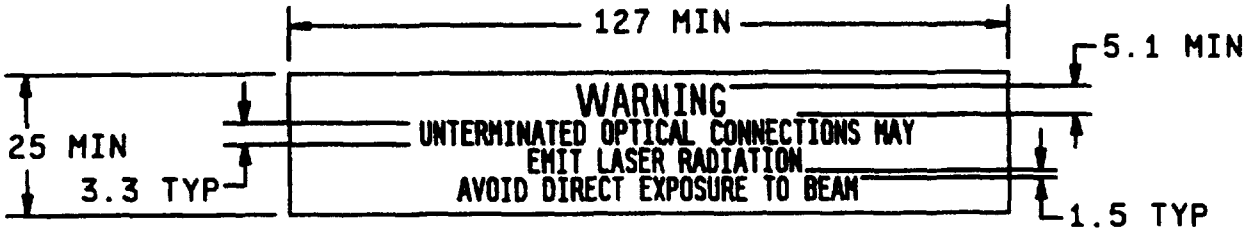


| mm | Inches |
|---|---|
| 1 5 | 06 |
| 3 3 | 13 |
| 5 1 | 20 |
| 25 4 | 1 00 |
| 127 | 5 0 |

NOTES
1 Dimensions are in millimeters
2 Inch-pound equivalents are given for information only
3 The signal word "WARNING" shall be in yellow on a black background in the upper panel The lower panel shall consist of black letters on a yellow background
4 Unless otherwise specified, tolerance is ±2 5 mm ( 1 inch) for one-place decimals and ±0 3 mm ( 01 inch) for two-place decimals

FIGURE 9 Outside warning label

TABLE I Parts list

| Subcomponent identification numbers, circled (see figures 1 through 9) | Part name | PIN M24728/3 | | Subassembly number | | | | Remarks and reference figures |
|---|---|---|---|---|---|---|---|---|
| | | 001 | 004 | 01 | 02 | 03 | 04 | |
| 01 | Box assembly with MCT frame | 1 | | 1 | | | | 1 and 3 |
| 02 | Box assembly without MCT frame | | 1 | | 1 | | | 1 and 3 |
| 03 | Cover assembly | 1 | 1 | | | 1 | | 1 and 4 |
| 04 | Mounting plate assembly | 3 | 3 | | | | 1 | 5 |
| 05 1/ 5/ | 406 4 X 863 6 box with MCT frame | | | 1 | | | | 3 |
| 06 1/ 5/ | 406.4 X 863 6 box without MCT frame | | | | 1 | | | 3 |
| 07 1/ 2/ | MCT frame | | | 2 | | | | 3 |
| 08 1/ 6/ | Flange pad | | | 24 | 24 | | | 3 |
| 09 7/ 8/ | Gusset | | | 4 | 4 | | | 3 |
| 10 1/ | Mounting leg | | | 2 | 2 | | | 3 |
| 11 1/ | Mounting channel | | | 2 | 2 | | | 3 |
| 12 1/ | Tie wrap bracket | | | 6 | 6 | | | 3 |
| 13 3/ | Warning label (inside) | 1 | 1 | | | | | 1 and 8 |
| 14 3/ | Warning label (outside) | 1 | 1 | | | | | 1 and 9 |
| 15 4/ | M6.35 x 1 27 ( 25 20) insert | | | 18 | 18 | | 2 | 3 and 5 |
| 16 4/ | M9.53 x 1 59 ( 375-16) helicoil | | | 24 | 24 | | | 3 |
| 17 2/ | MCT wedge pack | 2 | 2 | | | | | 1 |
| 18 9/ | Gasket | 1 | 1 | | | | | 1 |
| 19 12/ | Identification plate | 1 | 1 | | | | | 1 and 7 |
| 20 12/ | Blank nameplate | 1 | 1 | | | | | 1 |
| 21 4/ 13/ | M9 53 x 1.59 (.375-16) hex bolt | 24 | 24 | | | | | 1 |
| 22 4/ | 9.53 (.375) flat washer | 24 | 24 | | | | | 1 |
| 23 4/ | M6 35 x 1.27 ( 25-20) x 15 9 PHMS | 18 | 18 | | | | | 1 |
| 24 4/ | 6 35 ( 25) flat washer | 18 | 18 | | | | | 1 |
| 25 4/ | 6 35 ( 25) split lock washer | 18 | 18 | | | | | 1 |

See footnotes at end of table

TABLE I Parts list Continued

| Subcomponent identification numbers, circled (see figures 1 through 9) | Part name | PIN M24728/3 | | Subassembly number | | | | Remarks and reference figures |
|---|---|---|---|---|---|---|---|---|
| | | 001 | 004 | 01 | 02 | 03 | 04 | |
| 26 4/ | M4 0 x 79 (8 32) X 12 7 PHMS | | | | | | 12 | 5 |
| 27 4/ | 4 0 (#8) flat washer | | | | | | 12 | 5 |
| 28 4/ | 4 0 (#8) split lock washer | | | | | | 12 | 5 |
| 29 4/ | M3 5 x 79 (6 32) X 6 35 PHMS | 4 | 4 | | | | | 1 |
| 30 1/ 5/ | 406 4 X 863.6 cover | 1 | 1 | | | | | 4 |
| 31 5/ 10/ 12/ | Diagram holder | | | | | 4 | | 4 |
| 32 11/ | Inner gasket retainer | | | | | 4 | | 4 |
| 33 11/ | Outer gasket retainer | | | | | 4 | | 4 |
| 34 11/ | Stiffener | | | | | 1 | | 4 |
| 35 11/ | Stiffener | | | | | 2 | | 4 |
| 36 12/ | Mounting plate | | | | | | 1 | 5 |
| 37 4/ | M4.0 x 0.79 (8-32) insert | | | | | | 16 | 5 |
| 38 | Tie wrap post | 12 | 12 | | | | | 5 |

1/ Aluminum, 5052 H-32 or 6061 in accordance with ASTM-B 209

2/ See MIL-P-24705/1 for guidance

3/ In accordance with MIL-P-15024, type G, adhesive-backed, metal foil

4/ CRES

5/ See MIL-E-24142 for guidance

6/ See MIL-E-24142, figure 11 for guidance.

7/ Aluminum, 5052 H-32 or 6061 in accordance with ASTM-B-209 2 39 mm ( 094 inch) thick

8/ See MIL-E 24142, figure 6 for guidance

9/ See MIL-E-24142, figure 8 for guidance

10/ Constructed to hold an 152 mm (6 inches) by 279 mm (11 0 inches) diagram

11/ Aluminum, 5052 H-32 or 6061 in accordance with ASTM-B-209, 2 mm ( 060 inch) thick (min)

12/ Aluminum, 5052 H-32 or 6061 in accordance with ASTM-B 209

13/ See MIL E 24142, figure 4 for guidance

REQUIREMENTS.

Design and construction See figures 1 through 9, and table I

The interconnection box shall be constructed using MIL E-24142 as guidance

The MCT's shall be constructed using MIL-P 24705/1 as guidance The MCT interior dimensions shall be 217 4 x 60 0 mm (8 56 X 2 36 inches)

The enclosure assembly shall be constructed using the following combinations of materials

a. The box, MCT frame, flange pads, gussets, mounting legs, mounting channels, tie wrap bracket, and cover are aluminum 6061 in accordance with ASTM-B-209

b The box, MCT frame, flange pads, gussets, mounting legs, mounting channels, tie wrap bracket, and cover are aluminum, 5052 H-32 in accordance with ASTM-B-209

Enclosure assemblies constructed using 6061 aluminum shall not be welded

Enclosure assemblies constructed using 6061 aluminum shall be dip-brazed in accordance with MIL-B-7883, type V, grade B

Enclosure assemblies constructed using 6061 aluminum shall be artificially aged at 177°C for 12 hours to a 6061-T4 condition

Enclosure assemblies shall be class 1A conversion coated in accordance with MIL-C-5541 before being epoxy powder coated

Cable interconnection interface The cable feed-through shall be in accordance with MIL-P-24705 and shall accept cables having outer diameters between 6 mm ( 24 inch) and 25 4 mm (1 00 inch) constructed in accordance with MIL-C-85045

Enclosure assemblies shall be stress relieved in accordance with MIL-E-24142

Mass
M24728/3-001 20 4 kilograms (45 pounds maximum)
M24728/3-004 18 2 kilograms (40 pounds maximum)

Interconnection box mounting See figure 2

Interconnect organization

Fiber optic diagram holders See figure 4

Fiber optic cable tie post 12 (see figure 6)

Fiber optic splice tray holder 6 maximum (see MIL-I-24728/7)

Fiber optic connector module 3 maximum (see MIL-I-24728/6)

Fiber optic splices When outfitted with two MIL-I-24728/7 splice tray holders per splice module, the interconnection box shall organize up to 72 MIL-S-24623/4 fiber optic splices per splice module (maximum of three splice modules)

Fiber optic connector adapters When outfitted with MIL-I-24728/6 connector modules, the interconnection box shall organize up to 48 MIL-C-83522/17 connector adapters (maximum of three connector modules)

Cable retention Not applicable

Cable seal flexing Not applicable

Cable twist Not applicable

Compression resistance Not applicable

Impact Not applicable

Water pressure The applied pressure shall be 44 8 kilopascals (6 5 psi), equivalent to a depth of 4 57 m (15 ft) The interconnection cover bolts and the MCT wedge pack nut shall be tightened to a minimum torque of 16 94 newton meters (150 in lbs) during this test

Flammability Not applicable

Salt spray Not applicable

Flame spread Not applicable

Fungus test shall be conducted only on polymeric materials

The operating temperature range shall be -54°C to +65°C and the storage temperature range shall be 62°C to +85°C

Part or Identifying Number (PIN) See table I

M24728/3-001 Box, mounting plates, and lid with cable entrance and wedge pack

M24728/3-004 Box, mounting plates, and lid without cable entrance

The gasket size is 415 9 mm (16 38 inches) wide x 873 1 mm (34 38 inches) long

Insert blocks compatible with the MCT frame are specified in MIL P-24705/1

The US Government preferred system of measurement is the metric SI system However, this item was originally designed using inch-pound units of measurement In the event of conflict between the metric and inch-pound units, the inch pound units shall take precedence

## CONCLUDING MATERIAL

Custodians
Army - CR
Navy SH
Air Force 85
NASA NA

Review activities
Army - AR, MI
Navy - AS, CG, EC, MC, YD
Air Force - 17, 19, 80, 99
DLA - ES

Preparing activity
Navy - SH

Agent
DLA - ES

(Project 6099-0003-01)