MILITARY SPECIFICATION SHEET

INTERCONNECTION BOX, FIBER OPTIC, CONNECTOR PATCH PANEL MODULE

This specification is approved for use by all Departments and Agencies of the Department of Defense

The requirements for acquiring the product described herein shall consist of this specification sheet and the issue of the following specification listed in that issue of the Department of Defense Index of Specifications and Standards (DODISS) specified in the solicitation: MIL I-24728

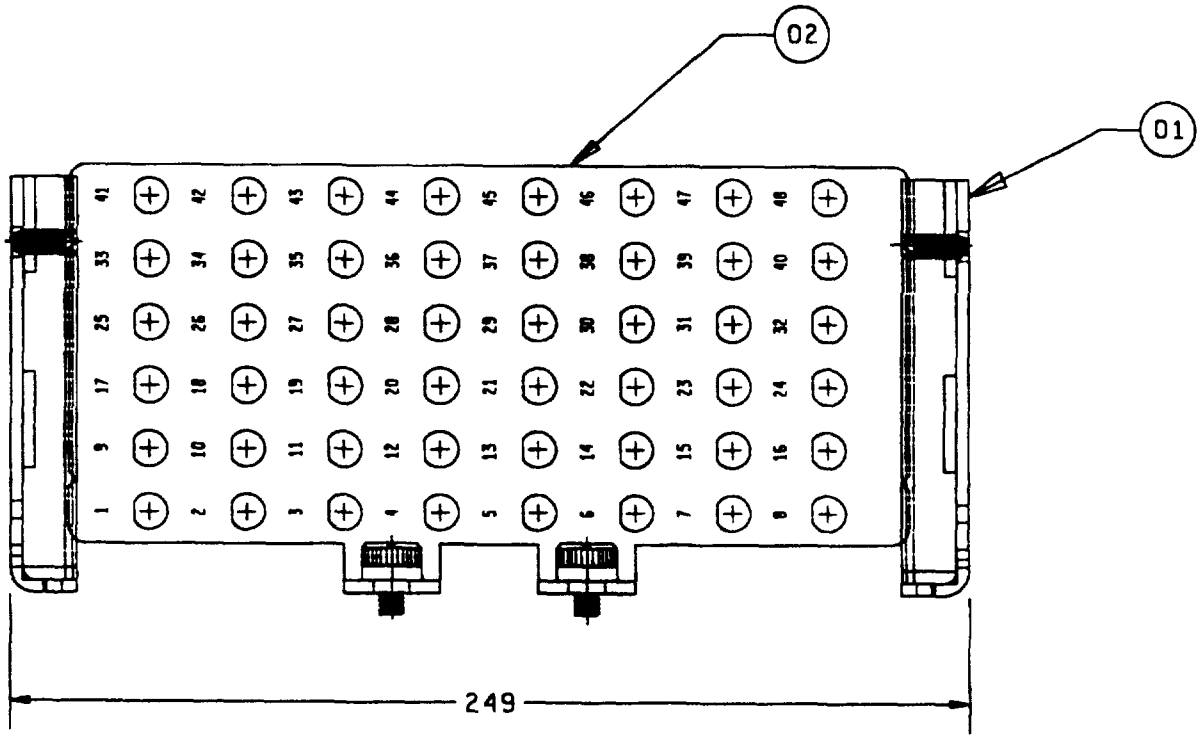

FIGURE 1 Patch panel module, M24728/6-001

DISTRIBUTION STATEMENT A Approved for public release, distribution is unlimited

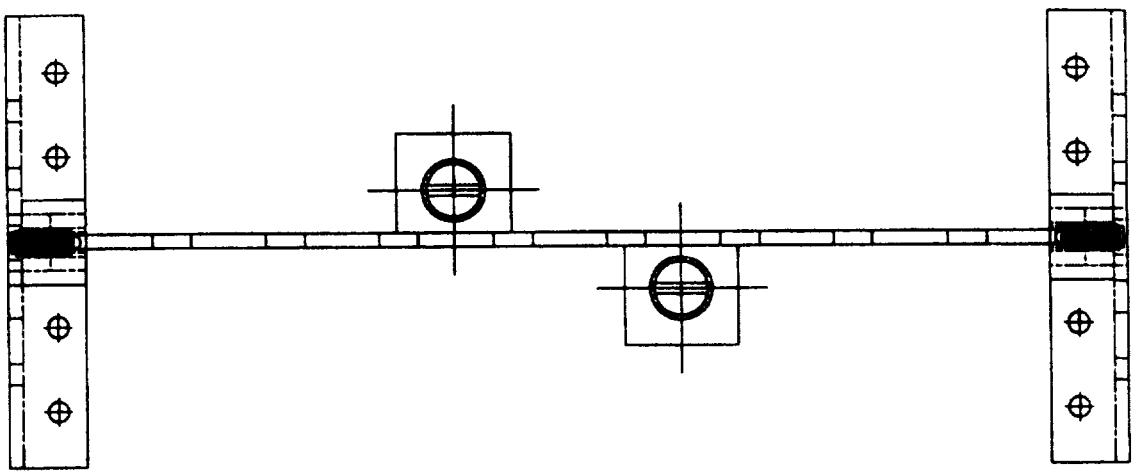

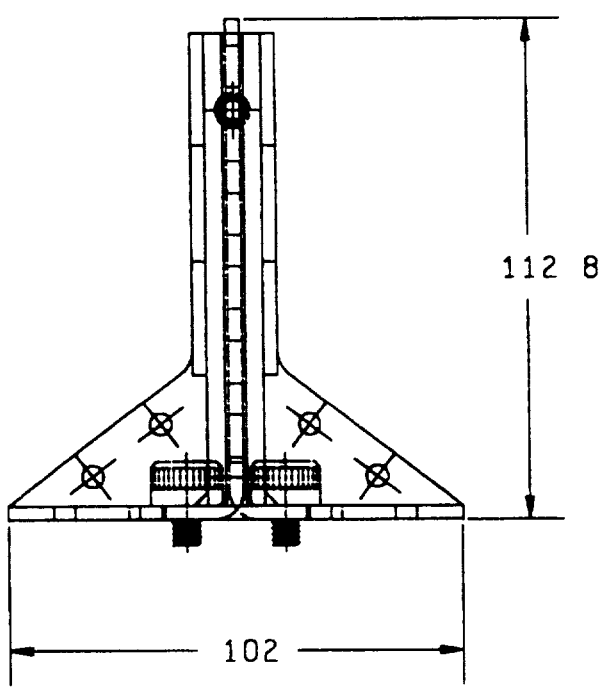

mm	Inches
102	4.0
112 8	4 44
249	9 8

NOTES
1 Dimensions are in millimeters
2 Inch-pound equivalents are given for information only
3 Unless otherwise specified, tolerance is ±2 5 mm (1 inch) for one-place decimals and ±0 3 mm (01 inch) for two-place decimals
4 For identification of subcomponent parts, see table I

FIGURE 1 Patch panel module, M24728/6 001 Continued

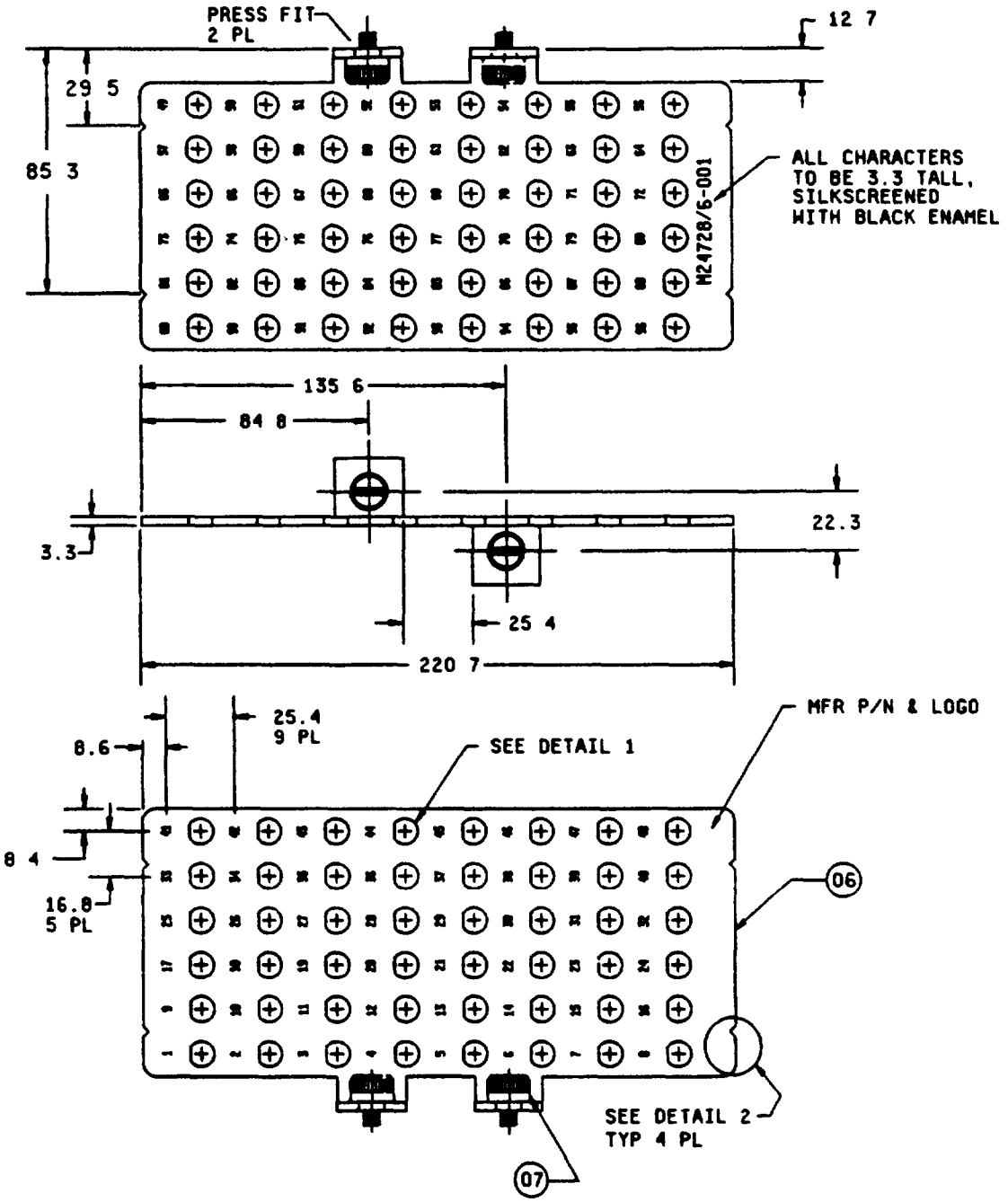

FIGURE 2 Patch panel assembly

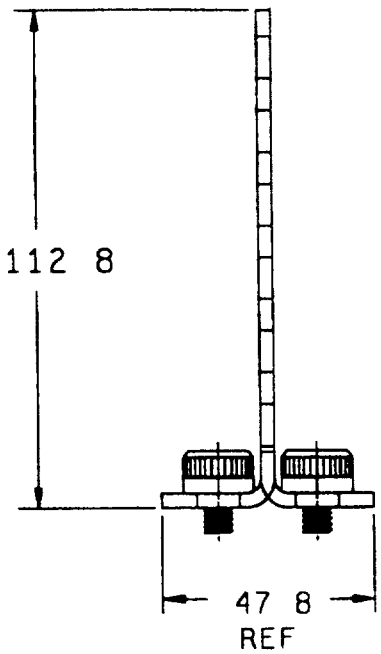

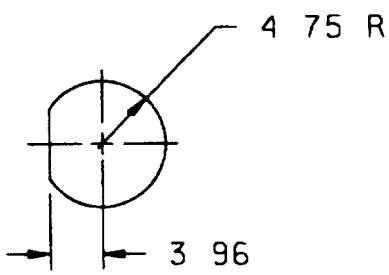

DETAIL 1

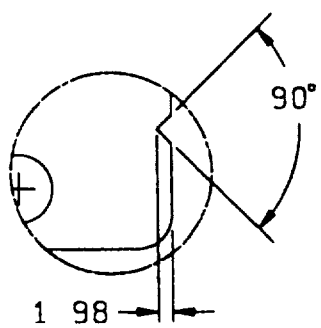

DETAIL 2

mm	Inches	mm	Inches
1 98	078	25 4	1 00
3 3	13	29 5	1 16
3 96	156	47 8	1 88
4 75	187	84 8	3 34
8 4	33	85 3	3 63
8 6	34	112 8	4 44
12 7	50	135 6	5 34
16 8	66	220 7	8 69
22 3	88		

NOTES
1 Dimensions are in millimeters
2 Inch-pound equivalents are given for information only
3 Unless otherwise specified, tolerance is ±0 3 mm (01 inch) for two-place decimals and ±0 13 mm (005 inch) for three-place decimals

FIGURE 2 Patch panel assembly - Continued

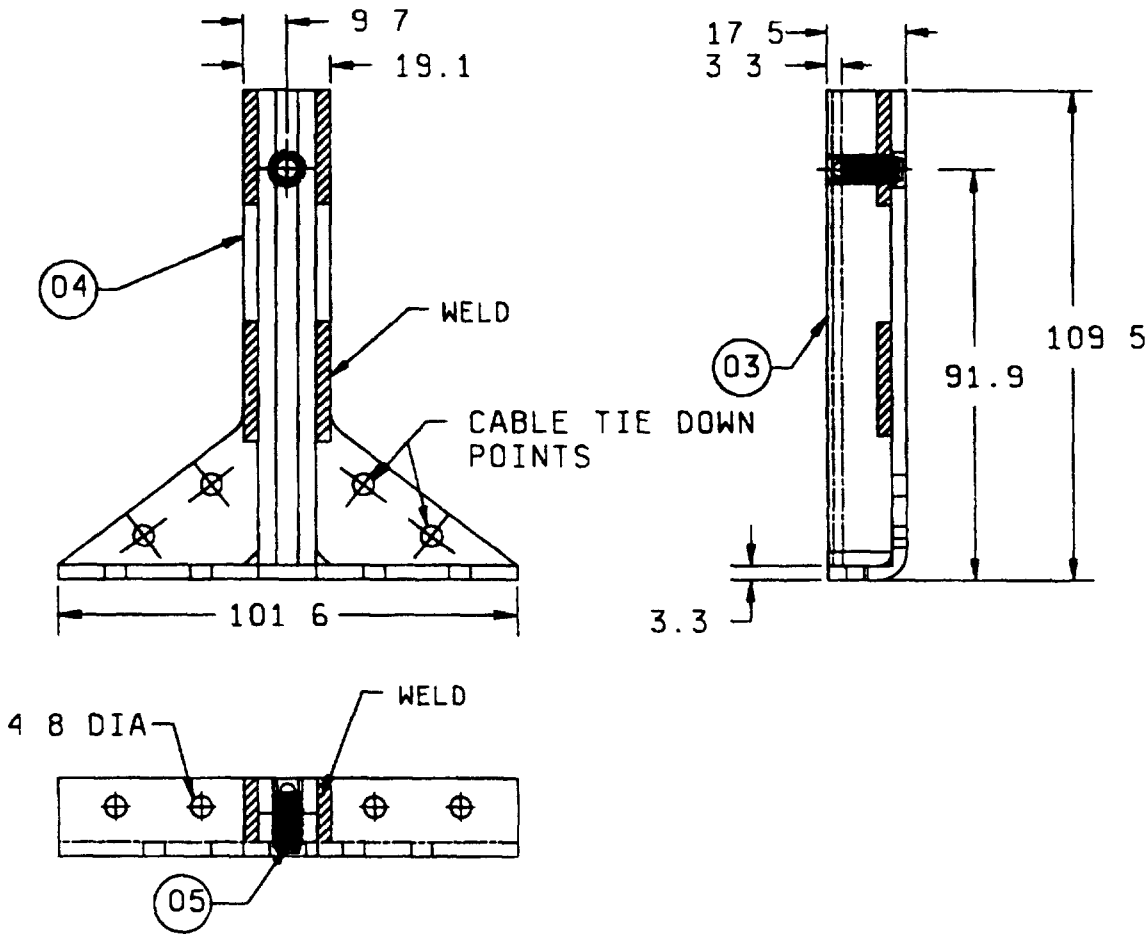

mm	Inches	mm	Inches
3 3	13	19 1	75
4 8	19	91 9	3 62
9 7	38	101 6	4 00
17 5	69	109 5	4 31

NOTES
1 Dimensions are in millimeters
2 Inch pound equivalents are given for information only
3 Unless otherwise specified, tolerance is ±0 8 mm (03 inch) for two-place decimals A tolerance of ±0 8 mm (03 inch) is acceptable on dimensions controlled by welding or brazing, providing that this tolerance does not interfere with the interchangeability of assemblies or parts

FIGURE 3 Slide channel assembly

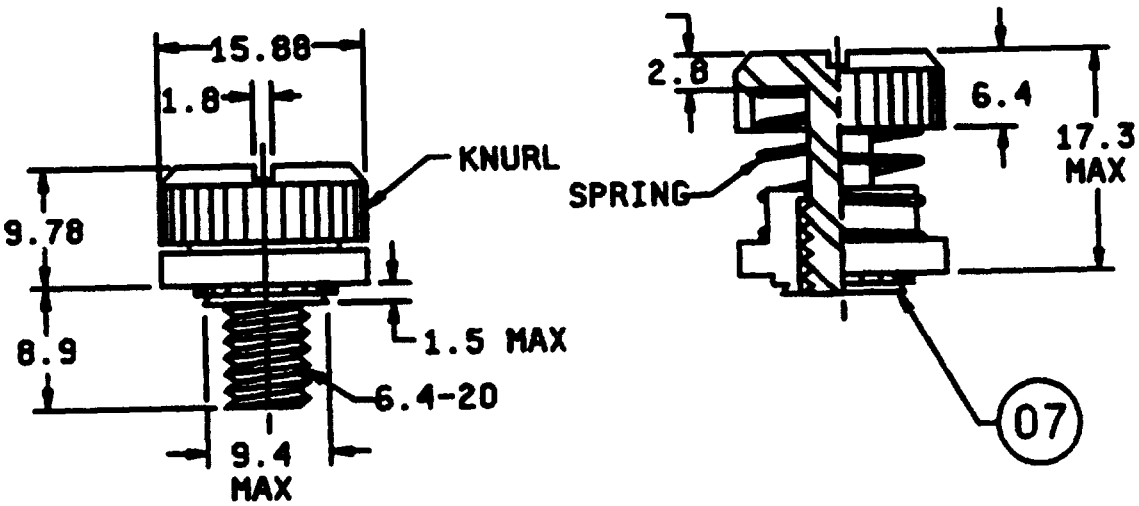

mm	Inches
1 5	06
1 8	07
2 8	11
6 4	25
8 9	35
9 4	37
9 78	385
15 88	625
17 3	68

NOTES
1 Dimensions are in millimeters
2 Inch-pound equivalents are given for information only
3 Unless otherwise specified, tolerance is ±0 3 mm (01 inch) for two-place decimals

FIGURE 4 Captive screw

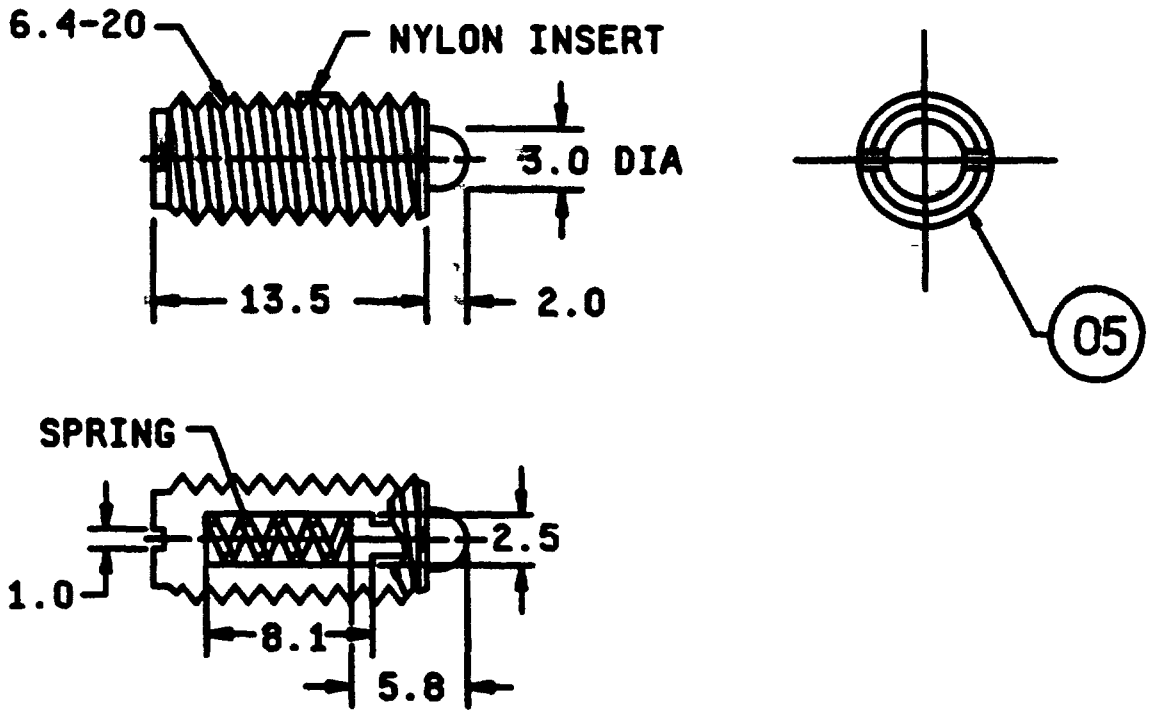

mm	Inches
1 0	.04
2 0	08
2 5	.10
3 0	.12
5 8	23
6 4	25
8 1	.32
13 5	53

NOTES
1 Dimensions are in millimeters
2 Inch-pound equivalents are given for information only
3 Unless otherwise specified, tolerance is ±0 3 mm (01 inch) for two-place decimals

FIGURE 5 Spring plunger

TABLE I Parts list

Subcomponent identification numbers, circled (see figures 1 through 5	Part name	PIN	Subassembly number		Remarks and reference figures
		001	01	02	
01	Slide channel assembly	1	1		1 and 3
02	Patch panel assembly	1		1	1 and 2
03 1/	Slide channel			2	3
04 1/	Slide channel bracket			2	3
05 2/	Spring plunger			2	3 and 5
06 1/	Patch panel		1		2
07 2/	M6 35 x 1 27 (25 20) captive screw		2		2 and 4

1/ Aluminum, 5052 H-32 in accordance with ASTM-B 209

2/ CRES

REQUIREMENTS

Design and Construction See figures 1 through 5, and table I

Patch panel modules shall be class 1A conversion coated in accordance with MIL-C-5541

Patch panel modules shall be stress relieved in accordance with MIL-E-24142

Mass (M24728/6-001) 454 kg (1 pound) maximum

Patch panel module mounting See figure 5 of MIL I 24728/1

Interconnect organization

Fiber optic connector adapters The patch panel module shall organize up to 48 MIL-C-83522/17 connector adapters

Cable retention Not applicable

Cable seal flexing Not applicable

Cable twist Not applicable

Compression resistance Not applicable

Impact Not applicable

Water pressure Not applicable

Flammability Not applicable

Salt Spray Not applicable

Flame Spread Not applicable

Fungus test shall be conducted only on polymeric materials
Temperature range The operating temperature range shall be -54°C to +65°C and the storage range shall be 62°C to +85°C

Part or Identifying Number (PIN) See table I

M24728/6 001, Patch panel assembly and two slide channel assemblies

Qualification by similarity -Manufacturers who produce products for either MIL I 24728/1 MIL I 24728/2 or MIL I-24728/3 and this specification sheet, and are qualified under MIL I 24728/1, MIL I 24728/2 or MIL-I-24728/3 and pass the size inspection specified herein, are qualified under this specification sheet

The US Government preferred system of measurement is the metric SI system However, this item was originally designed using inch-pound units of measurement In the event of conflict between the metric and inch-pound units, the inch pound units shall take precedence

CONCLUDING MATERIAL

Custodians
Army CR
Navy SH
Air Force - 85
NASA - NA

Review activities
Army - AR, MI
Navy AS, CG, EC, MC, YD
Air Force - 17, 19, 80, 85, 99
DLA ES

Preparing activity
Navy - SH

Agent
DLA ES

(Project 5975-1127)