MIL-J-5513C
16 April 1976

SUPERSEDING
MIL-J-5513B
13 May 1971

MILITARY SPECIFICATION

JOINTS, HYDRAULIC SWIVEL

This specification is approved for use by all Departments and Agencies of the Department of Defense.

1. SCOPE

1.1 This specification establishes the requirements for hydraulic swivel joints (see 6.1).

1.2 Classification. Hydraulic swivel joints covered by this specification shall be the following types and classes, as specified:

Type I	-65° to $+160^{\circ}$F (-55° to $+70^{\circ}$C) temperature range
Type II	-65° to $+275^{\circ}$F (-55° to $+135^{\circ}$C) temperature range
Type III	-65° to $+450^{\circ}$F (-55° to $+232^{\circ}$C) temperature range
Class 1500 psi	Where the nominal cut out pressure at the main pressure controlling device is 1500 psig
Class 3000 psi	Where the nominal cut out pressure at the main pressure controlling device is 3000 psig
Class 4000 psi	Where the nominal cut out pressure at the main pressure controlling device is 4000 psig
Class 5000 psi	Where the nominal cut out pressure at the main pressure controlling device is 5000 psig

1.3 Styles. Hydraulic swivel joints covered by this specification shall be the following styles:

Style a. Plane swivel: Able to swivel (rotate) in a single plane only.

Style b. Angular misalignment swivel: Able to swivel and compensate for a conical axial motion of 5 minimum to 7.5 maximum degrees (total axial motion of 10 to 15 degrees).

Style c. Other styles: Other swivel requirements, or other styles of swivel joints, such as joints incorporating sliding features, are covered by this specification.

FSC 4730

* 1.4 First article inspection. Swivel joints passing the first article inspection tests to specific type, class and style shall be considered as acceptable to those types and classes of the same style with lower requirements.

2. APPLICABLE DOCUMENTS

* 2.1 The following documents, of the issue in effect on date of invitation for bids or request for proposal, form a part of this specification to the extent specified herein.

SPECIFICATIONS

Federal

PPP-B-601	Boxes, Wood, Cleated-plywood
PPP-B-636	Box, Shipping, Fiberboard
PPP-B-640	Boxes, Fiberboard, Corrugated, Triple-wall
PPP-T-60	Tape; Packaging, Waterproof

Military

MIL-P-116	Preservation-packaging, Methods of
MIL-C-5501	Cap and Plugs, Protective, Dust and Moisture Seal
MIL-F-5509	Fitting, Flared Tube, Fluid Connection
MIL-H-8775	Hydraulic System Components, Aircraft and Missile, General Specification For
MIL-F-8815	Filter and Filter Elements, Fluid Pressure, Hydraulic Line, 15 Micron Absolute and 5 Micron Absolute, Type II Systems, General Specification For
MIL-H-8890	Hydraulic Components, Type III (-65° to 450°F), General Specification For
MIL-F-18280	Fitting, Flareless, Fluid Connection

STANDARDS

Military

MIL-STD-105	Sampling Procedures and Tables for Inspection By Attributes
MIL-STD-129	Marking For Shipment and Storage
MIL-STD-810	Environmental Test Methods
MS33514	Fitting End, Standard Dimensions For Flareless Tube Connection and Gasket Seal
MS33515	Fitting End, Standard Dimensions For Bulkhead Flareless Tube Connections
MS33656	Fitting End, Standard Dimensions For Flared Tube Connection and Gasket Seal
MS33657	Fitting End, Standard Dimensions For Bulkhead Flared Tube Connection

(Copies of specifications, standards, drawings, and publications required by contractors in connection with specific procurement functions should be obtained from the procuring activity or as directed by the contracting officer.)

2.2 Other publications. The following document forms a part of this specification to the extent specified herein. Unless otherwise indicated, the issue in effect on date of invitation for bids or request for proposal shall apply.

Uniform Classification Committee

Uniform Freight Classification Rules

(Application for copies of the above publication should be addressed to the Uniform Classification Committee, 202 Chicago Union Station, Chicago, Illinois 60606).

3. REQUIREMENTS

* 3.1 First article inspection. This specification makes provisions for first article inspection.

3.2 Materials. Materials used in the manufacture of swivel joints shall be of high quality, suitable for the purpose intended, and shall conform to applicable Government specifications. Materials conforming to industry or contractor specifications may be used provided the specifications are satisfactory to the Government and contain adequate provisions for testing. The use of these specifications will not constitute waiver of Government inspection.

3.2.1 Corrosion protection. All metals used on the construction of swivel joints shall be suitably protected to resist corrosion in accordance with MIL-H-8775 or MIL-H-8890, as applicable.

3.2.2 Dissimilar metals. Contact between dissimilar metals, especially brass, copper, or steel, in contact with aluminum or magnesium alloys, shall be avoided wherever possible. Where such contact is unavoidable the metals shall be protected in the best practicable manner.

* 3.2.3 Tube fitting ends. Joints of sizes -6 and smaller which incorporate tube ends in accordance with MS33656 or MS33657 (flared) shall have at least the tube connecting ends made of steel. Sizes -8 and larger may be made of aluminum alloy. Materials for flared tube connecting ends shall conform to the requirements of MIL-F-5509. Swivel joints which incorporate tube ends in accordance with MS33514 or MS33515 (flareless) shall have the tube connecting ends made of steel or aluminum alloy. Materials for flareless tube connecting ends in accordance with MS33514 or MS33515 shall conform to the requirements of MIL-F-18280.

3.3 Design and construction

3.3.1 Design. The hydraulic swivel joint shall be designed and tested in accordance with this specification and the requirements of MIL-H-8775 (types I and II) and MIL-H-8890 (type III). In the event of conflict, the requirements of this specification shall apply.

3.3.2 Packings and gland design. If a satisfactory installation using standard packings or gland design is not possible due to performance requirements, non-standard packing and gland designs may be used subject to approval by the procuring activity, and provided the units satisfactorily complete first article inspection.

* 3.3.3 Proof and burst pressure. The swivel joints shall be designed to withstand the proof and burst pressure requirements at all temperatures within their applicable temperature range, after being tested and aged at elevated temperatures, as specified in section 4.

3.3.4 Dimensions. Hydraulic swivel joints shall be designed and constructed within the limiting dimensions indicated on the applicable manufacturing drawings.

3.4 Performance. Hydraulic swivel joints shall satisfy the performance requirements specified in section 4 when subjected to the applicable tests.

3.5 Weight. The weight of the hydraulic swivel joints shall be as low as possible, consistent with the requirements of this specification.

* 3.6 Identification of product. All fitting connections and swivel joints shall be marked with the manufacturer's part number, serial number, and name or trademark.

3.7 Workmanship. All details of workmanship shall be of a sufficiently high grade to insure proper operation and service life.

4. QUALITY ASSURANCE PROVISIONS

4.1 Responsibility for inspection. Unless otherwise specified in the contract or purchase order, the contractor is responsible for the performance of all inspection requirements as specified herein. Except as otherwise specified in the contract or order, the contractor may use his own or any other facilities suitable for the performance of the inspection requirements specified herein, unless disapproved by the Government. The Government reserves the right to perform any of the inspections set forth in the specification where such inspections are deemed necessary to assure supplies and services conform to prescribed requirements.

4.2 Classification of inspections. The inspection and testing of the hydraulic swivel joints shall be classified as follows:

* a. First article inspection

b. Quality conformance inspection.

4.3 Test conditions

4.3.1 Test fluid. The hydraulic fluid used for all tests shall be the specified service fluid (see 3.3.1), which shall be filtered through a MIL-F-8815 (15 micron) filter, or equivalent.

4.3.2 Temperature. Except where otherwise specified, the tests shall be conducted at a room temperature of approximately 21° to 32°C (70° to 90°F) and a fluid temperature of approximately 21° to 43°C (70° to 110°F). The actual fluid temperature during testing shall be recorded.

4.3.3 Tolerance. Unless otherwise specified, the allowable tolerance for pressure during testing shall be plus or minus 2 percent.

* 4.4 First article inspection. The first article inspection of swivel joints shall consist of all the tests specified in section 4. When specified, the first article inspection shall be supplemented by tests approximating service conditions. (see 6.2 and 6.3)

4.4.1 Test report. The contractor shall prepare test reports showing quantitative results of all tests required. Tests shall be validated by authorized representatives of the contractor or laboratory, as applicable.

4.5 Quality conformance inspection. Quality conformance inspection shall consist of the following:

a. Individual tests

b. Sampling tests.

4.5.1 Individual tests. Each hydraulic swivel joint submitted for acceptance under contract shall be subjected to the following tests:

a. Examination of product (4.6.1)

b. Proof pressure and leakage (4.6.3)

c. Leakage at low pressure (4.6.4).

* 4.5.2 Sampling tests. Test swivel joints shall be selected at random in accordance with MIL-STD-105 and subjected to the tests as described under 4.5.2.1 The acceptance quality level for single normal inspection shall be 6.5. The special inspection level S-1 shall be used. Acceptability of a lot will be determined by the use of a sampling plan associated with a designated AQL of 6.5 Any failure resulting from these tests shall be thoroughly documented, analyzed, and corrected according to the procedures described in 4.5.2.2.

* 4.5.2.1 Sampling test procedure. The swivel joints shall be subjected to the endurance test paragraph 4.6.6 and applicable subparagraphs 4.6.6.1, 4.6.6.1.1, 4.6.6.1.2, 4.6.6.2, and 4.6.6.3. The sand and dust (para 4.6.6) portion of this test should only be accomplished twice, after the first 10,000 swivel cycles and after 50,000 swivel cycles.

* 4.5.2.2 Rejection and retest. When a swivel joint selected from a production run fails to meet the specification, no swivel joints still on hand or later produced shall be accepted until the extent and cause of failure have been determined and appropriately corrected. The contractor shall explain fully in writing to the procuring activity the cause of failure and the action taken to preclude recurrence. After correction, all of the tests shall be repeated using new samples.

* 4.5.3 Individual tests may continue. For production reasons, individual tests or other sampling plans may be continued pending the investigation of a sampling test failure. But final acceptance of the swivel joints on hand or swivel joints produced later shall not be made until it is determined that all swivel joints meet all the requirements of the specification.

* 4.5.4 Defects in swivel joints already accepted. The investigation of a test failure could indicate that defects may exist in swivel joints already accepted. If so, the contractor shall fully advise the procuring activity of all the defects likely to be found and the method of correcting them.

4.6 Test methods

4.6.1 Examination of product. Each swivel joint shall be examined for workmanship and conformance to applicable detail and assembly drawings.

4.6.2 Fluid immersion. All swivel joints containg nonmetallic seals or other nonmetallic parts, other than AN or MS static seals with standards glands, shall be immersed in the appropriate hydraulic fluid at the applicable temperature required by table 1 for a period of 72 hours before being subjected to the first article inspection. There shall be no leakage, sticking, binding, or other malfunctioning of the joint after this immersion.

Table I. Elevated Temperature Test Requirements

Swivel Joint Type	Test Temperature
I	158°to 162°F (70° to 72°C)
II	270°to 280°F (132° to 138°C)
III	440°to 460°F (227° to 238°C)

* 4.6.3 Proof pressure and leakage. Each hydraulic swivel joint shall be subjected to the proof pressures as specified in table II. For first article inspection test items (4.4), the test shall be conducted with the fluid at the maximum rated temperature (table I). The testing of quality conformance inspection items shall be conducted with fluid at room temperature. The pressure shall be applied for not less than two minutes. During this time, the joint shall be swiveled to four approximately equidistant positions through its swiveling circle and the pressure shall be held for a minimum of 30 seconds at each position. There shall be no evidence of leakage or other malfunctioning during this test.

* Table II. Proof and Burst Pressure

	Elevated Temperature		Room Temperature	
Rated Operating Pressure of Joint psig	Proof Pressure psig (min)	Burst Pressure psig (Min)	Proof Pressure psig (Min)	Burst Pressure psig (Min)
1500	2250	3750	3000	6000
3000	4500	7500	6000	12,000
4000	6000	10,000	8000	16,000
5000	7500	12,500	10,000	20,000

* 4.6.4 Leakage at low pressure. For first article inspection items, the test specified for proof pressure and leakage (4.6.3) shall be used except that the pressure applied at maximum rated fluid temperature, for the two minute period shall be 5 to 10 psi. The tests for quality conformance inspection items shall also use the proof pressure and leakage test (4.6.3) at room temperature, except air-under water shall be used in place of hydraulic fluid and the pressure for the two minute period shall be 5 to 10 psi. There shall be no leakage or malfunctioning during this test.

4.6.5 Reverse leakage. After plugging one of the ports of the swivel joint, a vacuum equivalent to 25 inches Hg (12.3 psi pressure differential) shall be applied at the other port and held for a period of five minutes. During this five minute period, the plane joint shall be operated through 25 cycles with each half cycle consisting of not less than 120° of rotation. Variable axis swivels shall be rotated through a minimum 90 percent of their rated swivel excursion through each half cycle. There shall be no reverse leakage, as indicated by loss of vacuum during this period.

* 4.6.6 Endurance. The swivel joint shall be subject to 100,000 swivel cycles at a rate of 25 ± 4 cycles perminute. (See figure 1 for a typical endurance test set-up). Each half cycle for plane swivels shall consist of a minimum of 120° rotation. For angular misalignment swivel joints, each half cycle shall consist of a minimum of 120° rotation and at the same time shall transcribe a concical motion of 120° (see figure 2). The conical motion is the result of a swivel joint being constantly misaligned 90 percent of its rated misalignment feature. During swivel cycling, the swivel joint shall be impulsed at a rate of 35 ± 5 cycles per minute (see figure 3). During the first sequence of 10,000 swivel cycles, the swivel

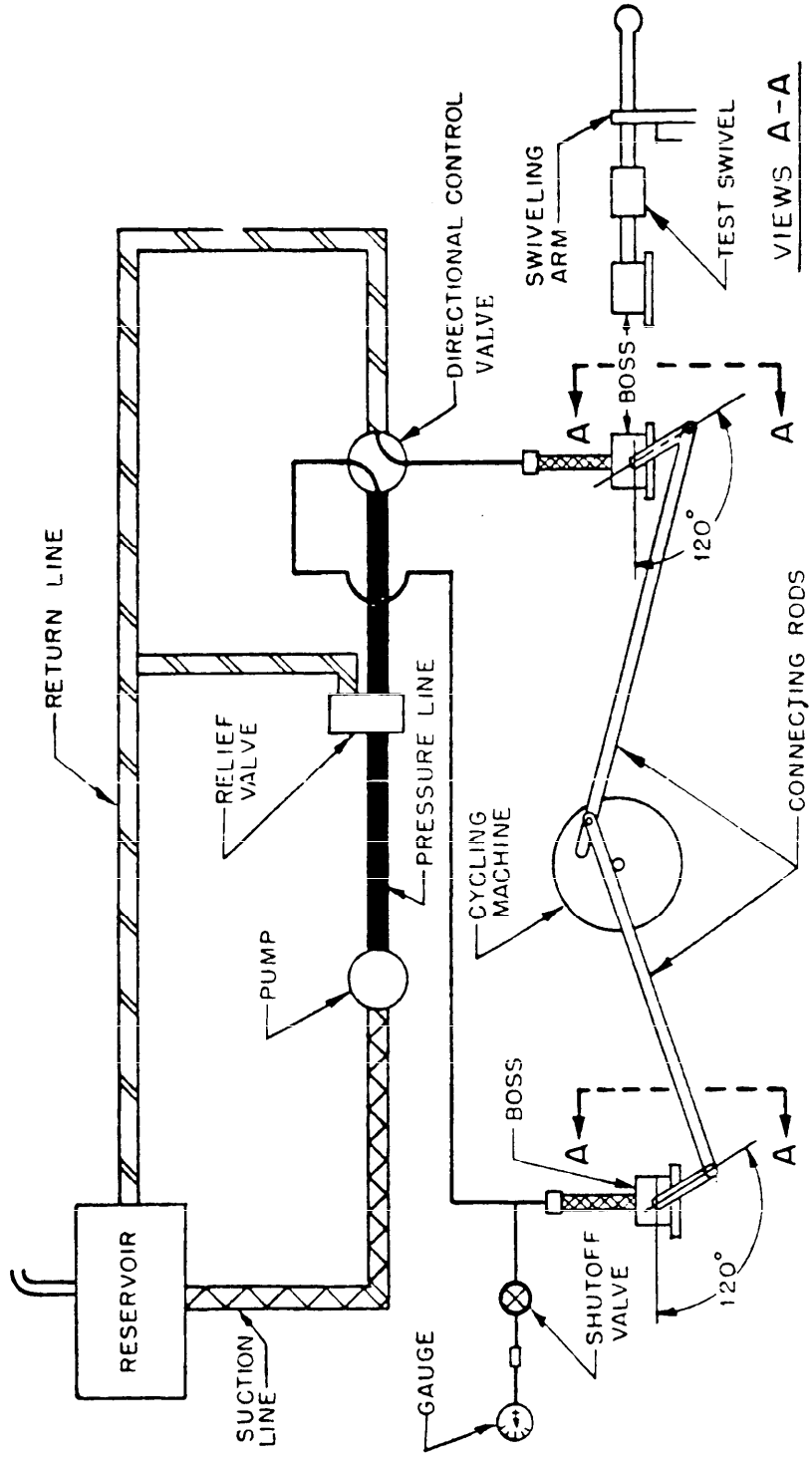

Figure 1. Typical Endurance Test Set-UP

NOTE: See figure 2 for actual loadings of various swivel joints.

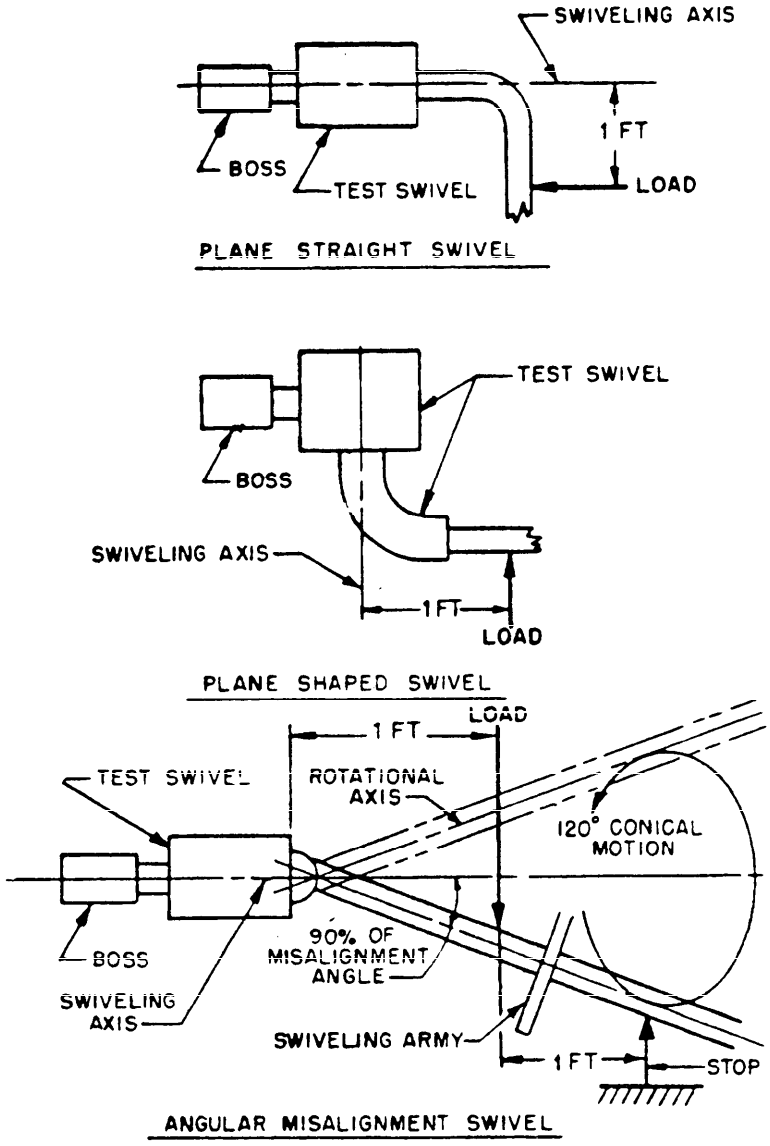

Figure 2. Eccentric Loading for Swivel Joints

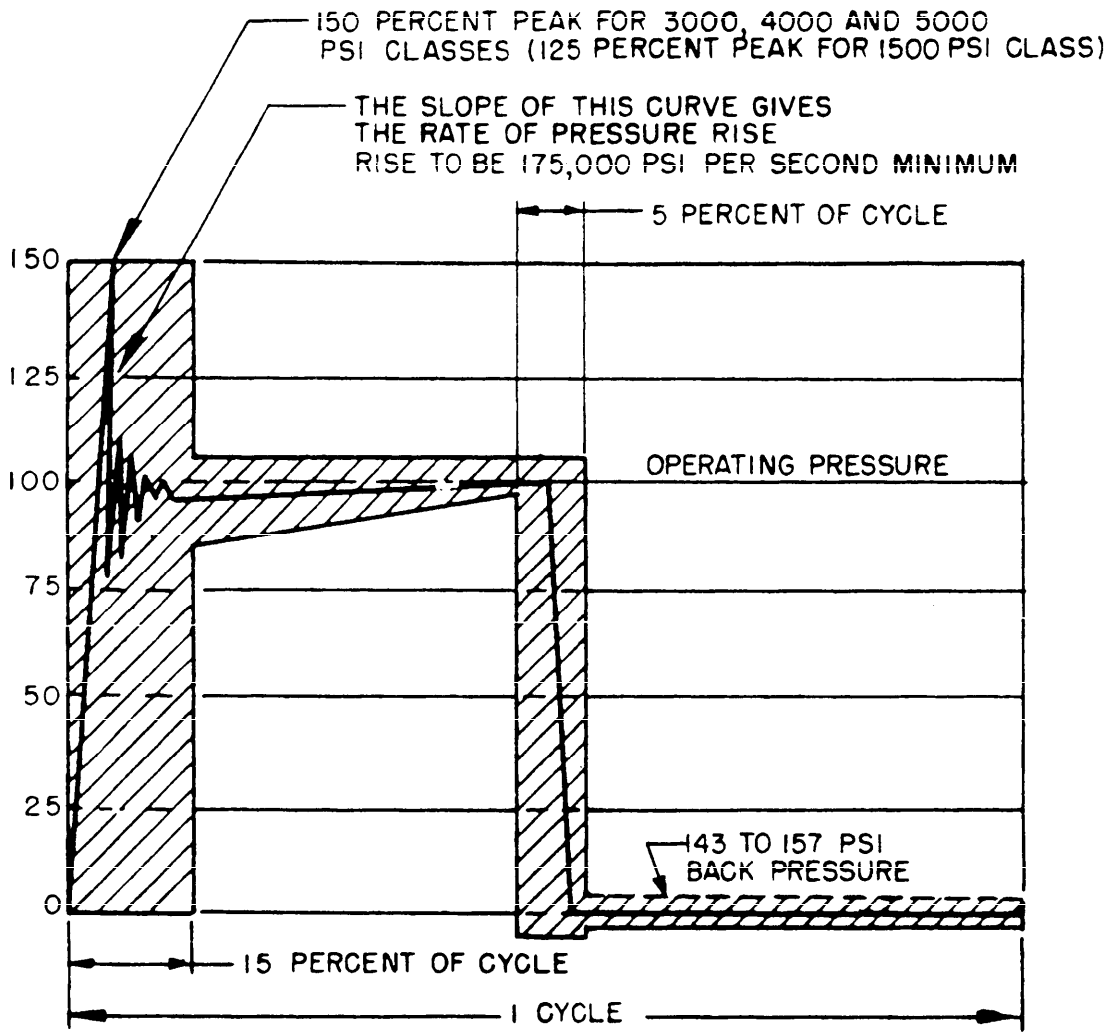

"PRESSURE RISE AND OPERATING PRESSURE"
PORTION FOR CURVE SHALL BE NO LESS THAN 45 PERCENT OF CYCLE TIME

Figure 3. Pressure Impulse Graph

joint shall be serviced with test fluid maintained at elevated temperatures as specified in table I for the respective swivel joint types. During swivel cycling, the joints shall also be subjected to the loading conditions as specified in 4.6.6.1.1 for plane swivels and 4.6.6.1.2 for angular misalignment swivels. After each 10,000 swivel cycles, reverse the direction of the load. The swivel shall be serviced with test fluid at 5 to 10 psig and the fluid temperature shall be maintained at the elevated temperature specified in table I for the respective joint type. The following schedule of tests shall be repeated five times.

a. 10,000 swivel/impulse cycles with eccentric loading

b. Sand dust test in accordance with MIL-STD-810, method 510.1, procedure I

(1) The first two schedule runs shall use only step 1 and the test period shall be only one hour

(2) The third schedule run shall use the entire procedure I

(3) The fourth and fifth schedule runs shall use only step 1 except that the test period shall be one hour and the chamber temperature shall be raised to 160°F (71°C)

c. 10,000 swivel/impulse cycles with eccentric loading

d. Icing (see 4.6.6.2).

* 4.6.6.1 Eccentric loading. The following tests are required to simulate tube misalignment of swivel joints in aircraft by including an eccentric loading.

* 4.6.6.1.1 Eccentric loading for style a plane swivels. Style a plane swivels shall be loaded radially and axially during endurance cycling by imposing a force on one element of the assembly. For style a plane swivels (straight, shaped, elbow, tee, etc.) the load (see table III) shall be applied parallel to the swiveling axis as shown on figure 2.

* 4.6.6.1.2 Eccentric loading for style b misalignment swivel. For style b angular misalingment swivels the load (see table III) shall be applied effective at the bearing portion of the swiveling element as shown in figure 2.

Table III

Swivel Loading Forces 1/

Dash Size	Load Pounds + 10%
4	1.5
5	2.0
6	3.0
8	4.0
10	6.0
12	8.0
16	10.0
20	12.0

1/ Values given are for style a plane swivels. Double the load for style b misalignment swivels.

* 4.6.6.2 Icing. With the test specimen stabilized in a test chamber at 35° ±2°F (0° to 3°C) and so oriented that the axis of rotation is horizontal, fully submerge the specimen in a mixture of water and ice at 32°F (0°C) for one minute. Remove the specimen from the water and decrease the chamber temperature to 15° ±5°F (-12° to -7°C) within five minutes and maintain this temperature for 30 minutes with no hydraulic pressure or motion applied to the specimen. Perform the test of 4.6.9 except that the temperature shall remain at 15° ±5°F (-12° to -7°C) and the soak period shall be one hour in lieu of 24 hours.

* 4.6.6.3 Failure criteria. There shall be no evidence of malfunctioning or leakage greater than one drop in 100 cycles. No packing change will be permissible during these tests.

* 4.6.7 Swiveling torque. After applying the rated internal operating pressure for a period of five minutes, increasing torque shall be applied gradually to obtain swiveling motion. The torque required to swivel and to compensate for angular realignment within the limits of such action of the swivel joint shall be noted and shall not exceed the value specified in table IV.

Table IV. Swiveling Torque and Flow Rate

Swivel Joint Dash Size	Torque Maximum, Pound-Inch								Rated Flow gpm
	1500 psi		3000 psi		4000 psi		5000 psi		
	Plane Swivel	Other Swivels	Plane Swivel	Other Swivels	Plane Swivel	Other Swivels	Plane Swivel	Other Swivels	
4	8	40	15	60					1.2
5	10	60	20	85	(Torque values for 4000 and 5000 psi swivel joints shall be as specified by the procuring activity. (see 6.2))				2.3
6	15	70	30	90					3.5
8	25	80	45	130					6.0
10	30	100	60	170					10.5
12	50	200	90	350					16.0
16	100	400	135	600					29.0
20	125		200						45.0

* 4.6.7.1 Swiveling torque at elevated temperature. The above specified torque test shall be repeated with both the joint and hydraulic fluid at the applicable temperature listed in table I. The torque shall not exceed the values specified in table IV.

* 4.6.8 Pressure drop. The rated flow, as specified in table IV, shall be passed through the swivel joint and the pressure drop determined by means of manometers, accurately calibrated pressure gages, or other suitable means (see figure 4). The pressure drop through any swivel joint shall not exceed 10 psig for each 90-degree bend in the joint. Pressure drop through a straight swivel joint shall not exceed 5 psig.

* 4.6.9 Cold temperature operation. While at room temperature, the swivel joint shall be filled with hydrulic fluid and pressurized to 5 to 10 psig. The swivel joint shall then be cooled to a temperature of -65° to -70°F (-54° to -57°C) and held at this temperature and pressure for a minimum of 24 hours. At the end of the 24-hour period, torque to obtain swiveling motion shall be determined first at 5 to 10 psig pressure and then at operating pressure. The swiveling torque shall not exceed the values specified in table IV. The joint shall then be swiveled for 25 cycles through the range specified in 4.6.7 at both 5 to 10 psig and rated operating pressure. Any evidence of leakage or other malfunctioning shall be cause for rejection.

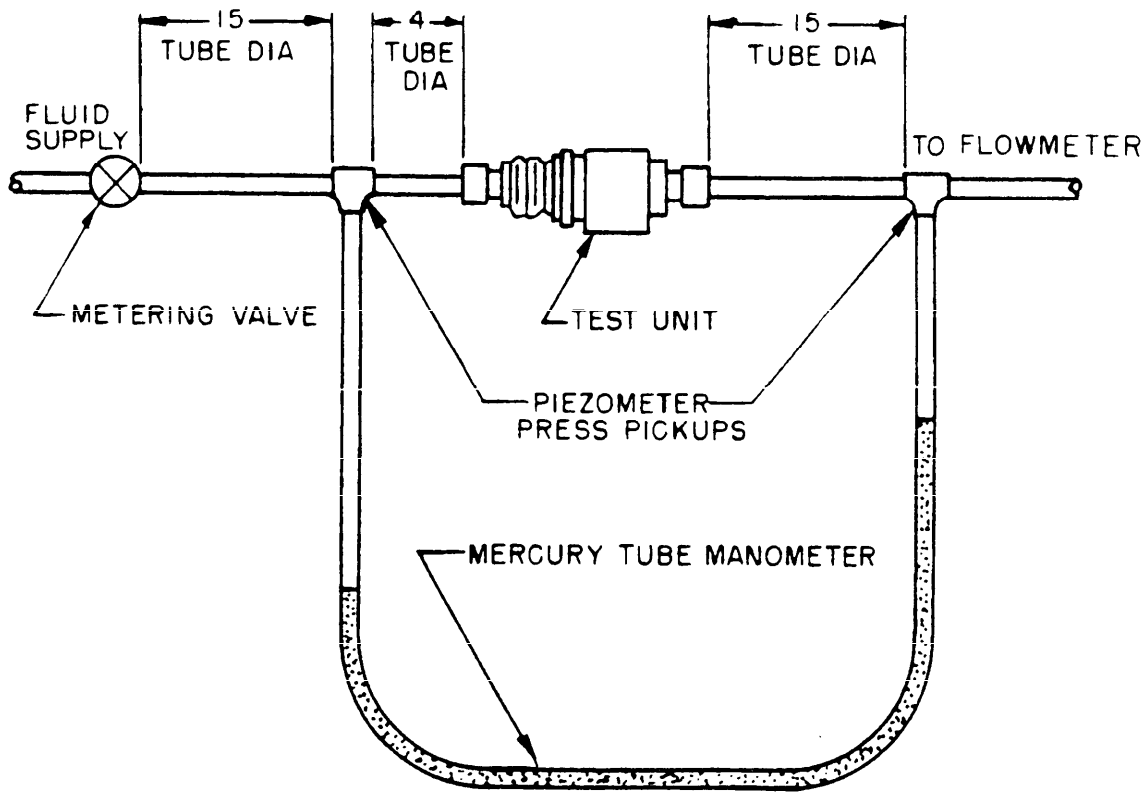

Figure 4. Pressure Drop Test Set-Up

* 4.6.9.1 Operation at differential temperature. The joint shall be allowed to warm up rapidly from -65°F (-54°C) temperature to at least +40°F (+4°C). Sufficient operational check tests shall be made throughout the warm-up temperature range to prove there is no binding or other malfunctioning due to differential rates of temperature expansion or contraction of component parts. Pressure shall be varied from 5 psig to rated pressure during the operational checks and there shall be no leakage.

* 4.6.10 Vibration. The swivel joint shall be mounted in a fixture by the bulkhead attaching (swivel housing) end in a fixture similar to the one shown on figure 5. The opposite end of the swivel joint shall be suitably capped or plugged. The applicable operating pressure as listed in table II shall be applied and maintained. The mounted swivel joint shall then be vibration tested in accordance with MIL-STD-810, method 514.2, procedure I, curve D (parts 1, 2 and 3). Upon completion of the vibration tests, the swivel joint shall be subjected to the proof pressure and leakage test specified in 4.6.3.

* 4.6.11 Shock. The swivel joint shall be mounted in a fixture by the bulkhead attaching (swivel housing) end in a fixture similar to the one shown on figure 5. The opposite end of the swivel joint shall be suitably capped or plugged. The applicable operating pressure listed in table II shall be applied and maintained. The mounted swivel joint shall then be shock tested in accordance with MIL-STD-810, method 516, procedure I, figure 516.2-1. Following shock testing, the swivel joint shall be subjected to the pressure and leakage test specified in 4.6.3.

* 4.6.12 Burst pressure. Hydrostatic pressure shall be applied at a rate not greater than 25,000 psi per minute until the burst pressure specified in table II is reached. The swivel joint shall be serviced with test fluid maintained at elevated temperature as specified in table I for the respective swivel joint types. Rupture of the assembly at any pressure below the specified burst pressure shall be cause for rejection.

4.7 Inspection of the preservation, packaging, packing and marking for shipment and storage. Inspection of the preservation, packaging, packing, and marking for shipment and storage shall be in accordance with the requirements of section 5.

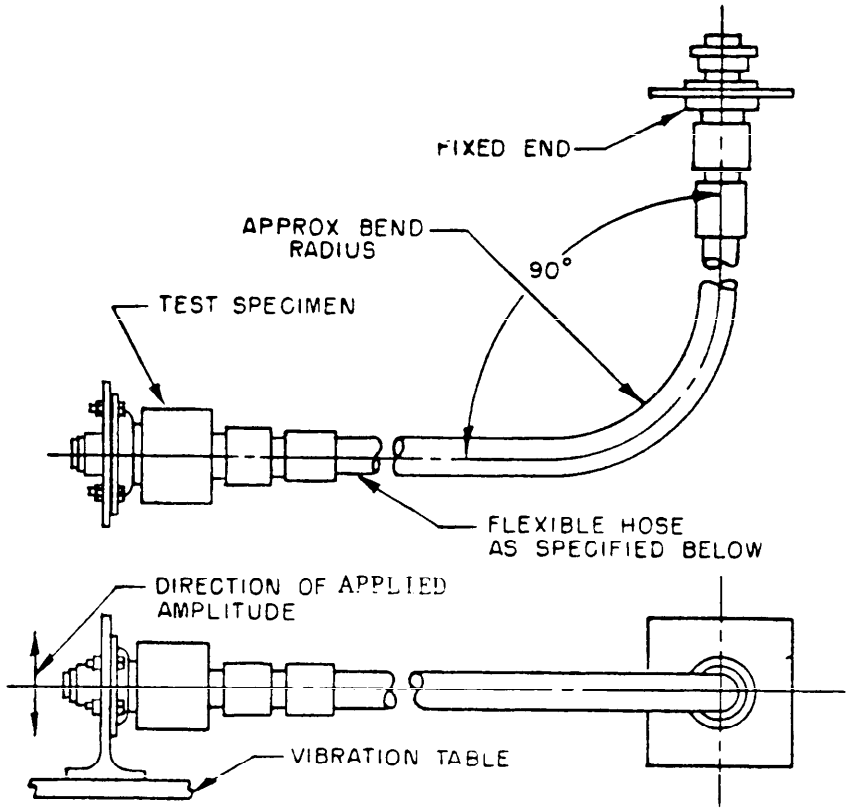

HOSE CUT LENGTHS 1/ AND BEND RADII

SWIVEL SIZE	EQUIVALENT SIZE IN.	MIL-H-25579 1500 PSI HOSE		MIL-H-38360 3000 PSI HOSE	
		HOSE LENGTH INCHES	RADIUS INCHES	HOSE LENGTH INCHES	RADIUS INCHES
-4	1/4	9	2	11	3
-6	3/8	12	4	14	5
-8	1/2	13	4 5/8	15	5 3/4
-10	5/8	15	5 1/2	16	6 1/2
-12	3/4	16	6 1/2	18	7 3/4
-16	1 - -	18	7 3/8	21	9 5/8
-20	1 1/4	23	11 - -	- -	- - - - - -

1/ HOSE TO MIL-H-25579 OR MIL-H-38360 AS APPLICABLE TO OPERATING PRESSURE.

Figure 5. Typical Set-up for Vibration and Shock Test

PACKAGING

5.1 Preservation and cleaning

5.1.1 Preservation. No preservative compound shall be applied to the swivel joints.

5.1.2 Cleaning. Before packaging, all swivel joints shall be free from all foreign matter such as grease, oil, dirt, etc. Special cleanliness levels, when required, shall be as specified by the procuring activity (see 6.2).

5.2 Packaging. Packaging shall be level A or C as specified.

5.2.1 Level A. Joints shall be protected from corrosion by coating the internal cavities with the service hydraulic fluid. They shall be packaged in accordance with MIL-P-116, method I. All ports shall be sealed with closures conforming to MIL-C-5501, or equal.

5.2.2 Level C. Joints shall be packaged in accordance with commercial practice in a manner that will afford protection aginst physical damage during direct shipment to the first receiving activity.

5.3 Packing. Packing shall be level A, B or C, as specified.

* 5.3.1 Level A. Joints packaged as specified in 5.2.1 shall be packed in exterior shipping containers conforming to overseas class of PPP-B-601, weather resistant class of PPP-B-636, or weather resistant class of PPP-B-640. All seams and manufacturer's joints conforming to PPP-B-636 and PPP-B-640 shall be sealed with tape conforming to class 1 of PPP-T-60. Closure and strapping shall be in accordance with the applicable container specification.

* 5.3.2 Level B. Joints packaged as specified in 5.2.1 shall be packed in domestic class shipping containers conforming to PPP-B-636 or class 1 of PPP-B-640. Containers shall be closed and strapped in accordance with the applicable container specification.

5.3.3 Level C. The joints shall be packed for shipment in commercial exterior shipping containers in a manner that will insure safe transportation at the lowest rate to the first receiving activity. Shipping containers shall comply with the Uniform Freight Classification Rules or regulations or other carriers as applicable to the mode of transportation.

5.4 Marking. In addition to any special marking required by the contract or order, interior packages and exterior shipping containers shall be marked in accordance with MIL-STD-129.

6. NOTES

6.1 Intended use. The swivel joints covered by this specification are intended for use in hydraulic systems conforming to MIL-H-5440 (types I and II), or MIL-H-8891 (type III) to provide a connection between fluid carrying lines and a hydraulic unit where swiveling action of the lines with respect to the unit or other lines may occur.

* 6.2 Ordering data. Procurement documents should specify the following:

a. Title, number, and date of this specification

b. Type, class, and style of swivel joint required (see 1.2 and 1.3)

c. Part number required (if known)

d. Special requirements or tests required (see 4.4 and 6.3)

e. Required torque values for 4000 and 5000 psi swivel joints (see table IV)

f. Special cleanliness levels if required (see 5.1.2)

g. Selection of applicable levels of packaging and packing required (see 5.2 and 5.3).

6.3 Special requirements. When hydraulic swivel joints to be procured under this specification should be subject to requirements in excess of, or different from those herein, such as pressure ratings, flow rates, angular misalignment, environmental testing, special materials of construction, precision cleaning, etc, such requirements will be agreed upon between the contractor and the procuring activity and should be included in the contractor's control drawing (see 4.4 and 6.2).

6.4 MIL-P-25732 O-rings. Units containing MIL-P-25732 O-rings should be restricted to applications consistent with the O-ring life limitations.

6.5 Changes from previous issue. The margins of this specification are marked with an asterisk to indicate where changes (additions, modifications, corrections, deletions) from the previous issue were made. This was done as a convenience only and the Government assumes no liability whatsoever for any inaccuracies in these notations. Bidders and contactors are cautioned to evaluate the requirements of this document based on the entire content irrespective of the marginal notations and relationship to the last previous issue.

Custodians:
Army - ME
Navy - AS
Air Force - 11

Review activities:
Air Force - 82
DSA-CS

Preparing activity:
Air Force - 11

Project No. 4730-0257

FOLD

ASD/ENESS
Wright-Patterson AFB, O 45433
OFFICIAL BUSINESS
PENALTY FOR PRIVATE USE $300

POSTAGE AND FEES PAID
DEPARTMENT OF THE AIR FORCE
DoD-318

U.S. MAIL

ASD/ENESS
Wright-Patterson AFB, Ohio 45433

FOLD

STANDARDIZATION DOCUMENT IMPROVEMENT PROPOSAL

OMB Approval
No. 22-R255

INSTRUCTIONS: The purpose of this form is to solicit beneficial comments which will help achieve procurement of suitable products at reasonable cost and minimum delay, or will otherwise enhance use of the document. DoD contractors, government activities, or manufacturers/vendors who are prospective suppliers of the product are invited to submit comments to the government. Fold on lines on reverse side, staple in corner, and send to preparing activity. Comments submitted on this form do not constitute or imply authorization to waive any portion of the referenced document(s) or to amend contractual requirements. Attach any pertinent data which may be of use in improving this document. If there are additional papers, attach to form and place both in an envelope addressed to preparing activity.

DOCUMENT IDENTIFIER AND TITLE

NAME OF ORGANIZATION AND ADDRESS

CONTRACT NUMBER

MATERIAL PROCURED UNDER A

☐ DIRECT GOVERNMENT CONTRACT ☐ SUBCONTRACT

1. HAS ANY PART OF THE DOCUMENT CREATED PROBLEMS OR REQUIRED INTERPRETATION IN PROCUREMENT USE?

   A. GIVE PARAGRAPH NUMBER AND WORDING

   B. RECOMMENDATIONS FOR CORRECTING THE DEFICIENCIES

2. COMMENTS ON ANY DOCUMENT REQUIREMENT CONSIDERED TOO RIGID

3. IS THE DOCUMENT RESTRICTIVE?

   ☐ YES ☐ NO *(If "Yes", in what way?)*

4. REMARKS

SUBMITTED BY *(Printed or typed name and address - Optional)*

TELEPHONE NO.

DATE

C16061

DD FORM 1 JAN 72 1426 REPLACES EDITION OF 1 JAN 66 WHICH MAY BE USED