MILITARY SPECIFICATION

LOUDSPEAKERS, PERMANENT MAGNET, BLASTPROOF
AND SUBMERSIBLE, NAVY TYPE 4954b ()

This amendment forms a part of Military Specification MIL-L-16225B(SHIPS), dated 12 January 1961.

PAGE 2

3.6.1: Delete "cycles per second (c.p.s)" and substitute "Hertz (Hz)". Make this same change wherever it appears.

3.6.1, last sentence, delete and substitute: "The frequency response, when tested 90° off the sound axis (see figure 2) shall be within the limits shown in figure 1."

3.6.2: Delete "c.p.s" and substitute "Hz". Make this same change wherever it appears.

3.6.5.2: Delete "db" and substitute "dB". Make this same change wherever it appears.

3.6.5.4: Delete in its entirety.

3.7.4, delete and substitute:

"3.7.4 Terminal tube entrance. A cable clamp shall be provided on the interior of the mounting base to support all incoming audio lines. The entrance for the terminal tube shall be enclosed and protected against the entrance of moisture, and constructed so as to permit ready access to the terminals for the connection of the leads. Entering tube and cable shall be Government-furnished."

PAGE 3

Following figure 1, add figure 2 as printed on page 2 of this amendment.

PAGE 4

3.7.7, delete and substitute:

"3.7.7 Terminals. All terminals necessary for connecting the audio source to the attenuator pad shall be provided on the matching transformer. The transformer terminals shall be suitable for connecting Navy type TTHFWA-1-1/2 cable conductors (0.030 inch, diameter) in accordance with MIL-C-915. All screws employed as parts of terminals for securing cable leads or other similar applications shall be of the 'captive' type. Staking or 'upsetting' the ends of the threaded shanks of such screws shall be considered as meeting these requirements."

PAGES 5 AND 6

4.4.4 and 4.4.5: Delete "200" and substitute "300".

Preparing activity:
Navy - EC

Agent:
DLA - ES

(Project 5965-N174)

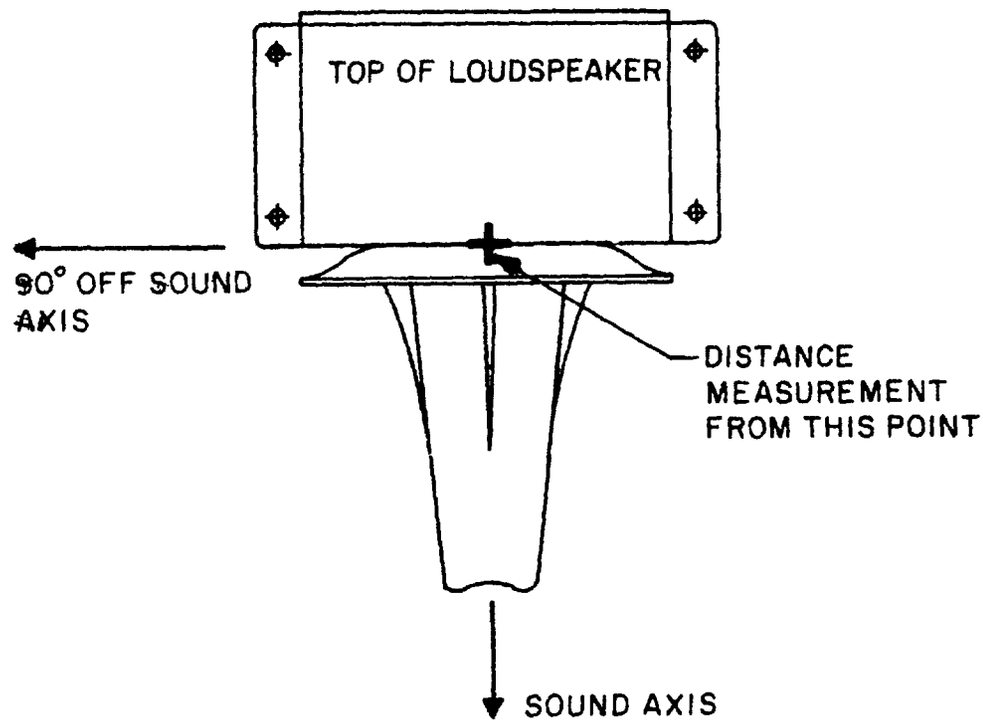

FIGURE 2. Orientation in acoustical tests.