|Qualification requirements are |
|removed for device types 02, 03|
|and 09 (see 1.1) |

MILITARY SPECIFICATION

MICROCIRCUITS, DIGITAL, BIPOLAR, TTL, DECODERS, MONOLITHIC SILICON

This specification is approved for use by all Departments and Agencies of the Department of Defense.

1. SCOPE.

1.1 Scope. This specification covers the detail requirements for monolithic silicon, TTL, microcircuit decoders. Qualification inspection requirements are removed for device types 02, 03, and 09. These device types are inactive for new design after the date of this revision. For the remaining device types 01, 04, 05, 06, 07, and 08, two product assurance classes and a choice of case outlines and lead finishes are provided and are reflected in the complete part number.

1.2 Part number. The part number shall be in accordance with MIL-M-38510, with the exception that the "JAN" or "J" certification mark shall not be used for devices 02, 03, and 09.

1.2.1 Device type. The device type shall be as shown in the following:

Device type	Circuit
01	BCD-to-decimal decoder
02 1/	Excess-3-to-decimal decoder
03 1/	Excess-3-gray-to-decimal decoder
04	BCD-to-decimal decoder/driver (30-volt, open collector output)
05	BCD-to-decimal decoder/driver (15-volt, open collector output)
06	BCD-to-seven-segment decoder/driver (30-volt, open collector output)
07	BCD-to-seven-segment decoder/driver (15-volt, open collector output)
08	BCD-to-seven-segment decoder/driver
09 1/	BCD-to-seven-segment decoder/driver (5.5-volt, open collector output)

1.2.2 Device class. The device class shall be the product assurance level as defined in MIL-M-38510.

1.2.3 Case outline. The case outline shall be designated as follows:

Letter	Case outline (see MIL-M-38510, appendix C)
A	F-1 (14-pin, 1/4" x 1/4"), flat-package
B	F-3 (14-pin, 3/16" x 1/4"), flat-package
C	D-1 (14-pin, 1/4" x 3/4"), dual-in-line package
D	F-2 (14-pin, 1/4" x 3/8"), flat-package
E	D-2 (16-pin, 1/4" x 7/8"), dual-in-line package
F	F-5 (16-pin, 1/4" x 3/8"), flat-package

1.2.4 Absolute maximum ratings.

Supply voltage range- - - - - - - - - - - - -	-0.5 to 7.0 V dc
Input voltage range - - - - - - - - - - - - -	-1.5 V dc at -12 mA to 5.5 V dc
Storage temperature range - - - - - - - - - -	-65°C to 150°C

1/ Qualification requirements are removed for these device types.

|Beneficial comments (recommendations, additions, deletions) and any pertinent data which may be of |
|use in improving this document should be addressed to: Rome Air Development Center (RBE-2), |
|Griffiss AFB, NY 13441, by using the self-addressed Standardization Document Improvement Proposal |
|(DD Form 1426) appearing at the end of this document or by letter. |

DISTRIBUTION STATEMENT A. Approved for public release; distribution is unlimited.

Maximum power dissipation, (P_D) 2/- - - - - -	226 mW dc (device types 01, 02 and 03) 3/ 341 mW dc (device types 04 and 05 467 mW dc (device types 06, 07, 08 and 09) 3/
Lead temperature (soldering, 10 seconds) - - - - - - - - - - - - -	300°C
Thermal resistance, junction to case (θ_{JC}):	
Cases A, B, C, D, E, F- - - - - - - - - - - - - - -	(See MIL-M-38510, appendix C)
Junction temperature (T_J) 4/- - - - - - - - - - - - -	+175°C
Maximum current into any output (output off):	
Device types 04, 05, 06, 07 and 09 3/ - - - - - -	1 mA

1.2.5 Recommended operating conditions.

Supply voltage (V_{CC})- - - - - - - - - - - - - - - - -	4.5 V dc minimum to 5.5 V dc maximum
Minimum high level input voltage (V_{IH})- - - - - - -	2.0 V dc
Maximum low level input voltage (V_{IL}) - - - - - - -	0.8 V dc
Sink-current capability by device type:	
01, 02, 03 3/- - - - - - - - - - - - - - - - - - - -	16 mA
04, 05- -	20 mA
06, 07 outputs a-g. - - - - - - - - - - - - - - - -	40 mA
BI/RBO node- - - - - - - - - - - - - - - - - -	8 mA
08 outputs a-g. - - - - - - - - - - - - - - - -	6.4 mA
BI/RBO node- - - - - - - - - - - - - - - - - -	8 mA
09 3/ -	10 mA
Case operating temperature range (T_C) - - - - - - - -	-55°C to +125°C

2. APPLICABLE DOCUMENT

2.1 Government documents.

2.1.1 Specification and standard. The following specification and standard form a part of this specification to the extent specified herein. Unless otherwise specified, the issues of these documents shall be those listed in the issue of the Department of Defense Index of Specifications and Standards (DODISS) and supplement thereto, cited in the solicitation.

SPECIFICATION

MILITARY

MIL-M-38510 - Microcircuits, General Specification for.

STANDARD

MILITARY

MIL-STD-883 - Test Methods and Procedures for Microcircuits.

(Copies of the specification and standard required by contractors in connection with specific acquisition functions should be obtained from the contracting activity or as directed by the contracting activity.)

2.2 Order of precedence. In the event of a conflict between the text of this specification and the references cited herein (except for associated detail specifications, specification sheets or MS standards), the text of this specification shall take precedence. Nothing in this specification, however, shall supersede applicable laws and regulations unless a specific exemption has been obtained.

3. REQUIREMENTS

3.1 Detail specifications. The individual item requirements shall be in accordance with MIL-M-38510, and as specified herein.

2/ Must withstand the added P_D due to short circuit condition (i.e., I_{OS}) at one output for 5 seconds duration
3/ Qualification requirement are removed for devices 02, 03, and 09.
4/ Maximum junction temperature shall not be exceeded except for allowable short duration burn-in screening per method 5004 of MIL-STD-883.

3.2 Design, construction, and physical dimensions. The design, construction, and physical dimensions shall be as specified in MIL-M-38510 and herein.

3.2.1 Logic diagram and terminal connections. The logic diagram and terminal connections shall be as specified on figures 1 and 2.

3.2.2 Truth tables. The truth tables shall be as specified on figure 3.

3.2.3 Case outlines. Case outlines shall be in accordance with 1.2.3.

3.2.4 Schmatic circuits. Schematic circuits shall be submitted to the preparing activity prior to inclusion of a manufacturer's device in the specification and shall be submitted to the qualifying activity and agent activity (DESC-ECS) as a prerequisite for qualification. All qualified manufacturers schematics shall be maintained by the agent activity and will be available upon request.

3.3 Lead material and finish. The lead material and finish shall be in accordance with MIL-M-38510 (see 6.4).

3.4 Electrical performance characteristics. Unless otherwise specified, the electrical performance characteristics are as specified in table I, and apply over the full recommended case operating temperature range.

TABLE I. Electrical performance characteristics, device types 01, 02 and 03 1/

Test	Symbol	Conditions $-55^{\circ}C \leq T_C \leq +125^{\circ}C$	Limits Min	Limits Max	Units
High-level output voltage	V_{OH}	V_{CC} = 4.5 V, I_{OH} = -0.8 mA	2.4	---	V
Low-level output voltage	V_{OL}	V_{CC} = 4.5 V, I_{OL} = 16 mA V_{IN} = 0.8 V and 2.0 V	---	0.4	V
Input clamp voltage	V_{IC}	V_{CC} = 4.5 V, I_{IN} = -12 mA	---	-1.5	V
Low-level input current	I_{IL}	V_{CC} = 5.5 V, V_{IN} = 0.4 V 2/	-0.7	-1.6	mA
High-level input current	I_{IH1}	V_{CC} = 5.5 V, V_{IN} = 2.4 V 3/	---	40	µA
High-level input current	I_{IH2}	V_{CC} = 5.5 V, V_{IN} = 5.5 V 3/		100	µA
Short-circuit output current	I_{OS}	V_{CC} = 5.5 V 4/	-20	-55	mA
Supply current	I_{CC}	V_{CC} = 5.5 V, V_{IN} = 0 V	---	41	mA
Propagation delay time through two logic levels	t_{PHL}	C_L = 50 pF minimum R_L = 390 Ω ±5% (Figure 5)	5	39	ns
Propagation delay time through two logic levels	t_{PLH}		5	39	ns
Propagation delay time through three logic levels	t_{PHL}		5	46	ns
Propagation delay time through three logic levels	t_{PLH}		5	46	ns

1/ Qualification requirement are removed for device types 02, and 03.
2/ All unspecified inputs at 5.5 volts.
3/ All unspecified inputs grounded.
4/ Not more than one output should be shorted at one time.

TABLE I. Electrical performance characteristics, device types 04 and 05.

Test	Symbol	Conditions $-55^{\circ}C \leq T_C \leq +125^{\circ}C$	Limits Min	Limits Max	Units
Low-level output voltage	V_{OL1}	V_{CC} = 4.5 V, I_{OL} = 80 mA	---	0.9	V
Low-level output voltage	V_{OL2}	V_{CC} = 4.5 V, I_{OL} = 20 mA	---	0.4	V
Input clamp voltage	V_{IC}	V_{CC} = 4.5 V, I_{IN} = -12 mA	---	-1.5	V
Maximum collector cut-off current	I_{CEX}	V_{CC} = 4.5 V, V_{OH} = max 1/		250	µA
Low-level input current	I_{IL}	V_{CC} = 5.5 V, V_{IN} = 0.4 V 2/	-0.7	-1.6	mA
High-level input current	I_{IH1}	V_{CC} = 5.5 V, V_{IN} = 2.4 V 3/	---	40	µA
High-level input current	I_{IH2}	V_{CC} = 5.5 V, V_{IN} = 5.5 V 3/		100	µA
Supply current	I_{CC}	V_{CC} = 5.5 V, V_{IN} = 0 V	---	62	mA
Propagation delay time to a high logic level	t_{PLH}	C_L = 50 pF minimum R_L = 390 Ω ±5%	5	73	ns
Propagation delay time to a low logic level	t_{PHL}	(Figure 6)	5	73	ns

1/ Device type 04 maximum V_{OH} = 30 V.
Device type 05 maximum V_{OH} = 15 V.
2/ All unspecified inputs at 5.5 volts.
3/ All unspecified inputs grounded.

TABLE I. Electrical performance characteristics, device types 06 and 07.

Test	Symbol	Conditions $-55^{\circ}C \leq T_C \leq +125^{\circ}C$	Limits Min	Limits Max	Units
Low-level output voltage 1/	V_{OL1}	V_{CC} = 4.5 V, I_{OL} = 40 mA	---	0.4	V
Low-level output voltage 2/	V_{OL2}	V_{CC} = 4.5 V, I_{OL} = 8 mA	---	0.4	V
Input clamp voltage	V_{IC}	V_{CC} = 4.5 V, I_{IN} = -12 mA	---	-1.5	V
High-level output voltage 2/	V_{OH}	V_{CC} = 4.5 V, I_{OH} = -0.2 mA	2.4	---	V
Maximum collector cut-off current 3/	I_{CEX}	V_{CC} = 4.5 V, V_{OH} = max 3/	---	250	µA
Low-level input current 4/	I_{IL1}	V_{CC} = 5.5 V, V_{IN} = 0.4 V 5/	-0.4	-1.6	mA
Low-level input current 2/	I_{IL2}	V_{CC} = 5.5 V, V_{IN} = 0.4 V 5/	-1.7	-4.2	mA
High-level input current 4/	I_{IH1}	V_{CC} = 5.5 V, V_{IN} = 2.4 V 6/	---	40	µA
High-level input current 4/	I_{IH2}	V_{CC} = 5.5 V, V_{IN} = 5.5 V 6/		100	µA
Short-circuit output current 1/	I_{OS}	V_{CC} = 5.5 V 6/	---	-4	mA
Supply current	I_{CC}	V_{CC} = 5.5 V, V_{IN} = 5.5 V	---	85	mA
Propagation delay time from any input except RBI to any output	t_{PLH}	C_L = 50 pF minimum R_L = 120 Ω ±5% 1/ R_L = 560 Ω ±5% 2/ (Figure 7)	8	144	ns
Propagation delay time from RBI to any output	t_{PLH}		8	144	ns
Propagation delay time from any input except RBI to any out	t_{PHL}		8	144	ns
Propagation delay time from RBI to any output	t_{PHL}		8	144	ns

1/ Outputs a through g only.
2/ BI/RBO node only.
3/ Device type 06 maximum V_{OH} = 30 V.
Device type 07 maximum V_{OH} = 15 V.
4/ Any input except BI/RBO node.
5/ All unspecified inputs at 5.5 volts.
6/ All unspecified inputs grounded.

TABLE I. Electrical performance characteristics, device type 08.

Test	Symbol	Conditions $-55^{\circ}C \leq T_C \leq +125^{\circ}C$	Limits Min	Limits Max	Units
High-level output voltage 1/	V_{OH1}	V_{CC} = 4.5 V, I_{OH} = -0.4 mA	2.4	---	V
High-level output voltage 2/	V_{OH2}	V_{CC} = 4.5 V, I_{OH} = -0.2 mA	2.4	---	V
Low-level output voltage 1/	V_{OL1}	V_{CC} = 4.5 V, I_{OH} = 6.4 mA	---	0.4	V
Low-level output voltage 2/	V_{OL2}	V_{CC} = 4.5 V, I_{OH} = 8 mA	---	0.4	V
Input clamp voltage	V_{IC}	V_{CC} = 4.5 V, I_{IN} = -12 mA	---	-1.5	V
Low-level input current 3/	I_{IL1}	V_{CC} = 5.5 V, V_{IN} = 0.4 V 4/	-0.4	-1.6	mA
Low-level input current 3/	I_{IL2}	V_{CC} = 5.5 V, V_{IN} = 0.4 V 4/	-1.7	-4.2	mA
High-level input current 3/	I_{IH1}	V_{CC} = 5.5 V, V_{IN} = 2.4 V 5/	---	40	µA
High-level input current 3/	I_{IH2}	V_{CC} = 5.5 V, V_{IN} = 5.5 V 5/		100	µA
Short-circuit output current	I_{OS}	V_{CC} = 5.5 V	---	-4	mA
Supply current	I_{CC}	V_{CC} = 5.5 V, V_{IN} = 0 V	---	76	mA
Propagation delay time from any input except RBI to any output	t_{PLH}	C_L = 50 pF minimum R_L = 750Ω ±5% 1/ R_L = 560Ω ±5% 2/ (Figure 8)	8	144	ns
Propagation delay time from RBI to any output	t_{PLH}		8	144	ns
Propagation delay time from any input except RBI to any output	t_{PHL}		8	144	ns
Propagation delay time from RBI to any output	t_{PHL}		8	144	ns

1/ Outputs a through g only.
2/ BI/RBO node only.
3/ Any input except BI/RBO node.
4/ All unspecified inputs at 5.5 volts.
5/ All unspecified inputs grounded.

TABLE I. Electrical performance characteristics, device type 09 1/

Test	Symbol	Conditions $-55°C \leq T_C \leq +125°C$	Limits Min	Limits Max	Units
Low-level output voltage	V_{OL}	V_{CC} = 4.5 V, I_{OL} = 10 mA	---	0.4	V
Input clamp voltage	V_{IC}	V_{CC} = 4.5 V, I_{IN} = -12 mA	---	-1.5	V
Maximum collector cut-off current	I_{CEX}	V_{CC} = 4.5 V, V_{OH} = 5.5 V	---	250	µA
Low-level input current	I_{IL}	V_{CC} = 5.5 V, V_{IN} = 0.4 V 2/	-0.4	-1.6	mA
High-level input current	I_{IH1}	V_{CC} = 5.5 V, V_{IN} = 2.4 V 3/	---	40	µA
High-level input current	I_{IH2}	V_{CC} = 5.5 V, V_{IN} = 5.5 V 3/		100	µA
Supply current	I_{CC}	V_{CC} = 5.5 V, V_{IN} = 0 V	---	47	mA
Propagation delay time from any input to any output	t_{PLH}	C_L = 50 pF minimum R_L = 470Ω ±5% 1/	8	144	ns
Propagation delay time from any input to any output	t_{PHL}	(Figure 9)	8	144	ns

1/ Qualification requirements are removed for device type 09.
2/ All unspecified inputs at 5.5 volts.
3/ All unspecified inputs grounded.

3.5 Electrical test requirements. The electrical test requirements for each device class shall be the subgroups specified in table II. The electrical tests for each subgroup are described in table III.

3.6 Marking. Marking shall be in accordance with MIL-M-38510 and 1.2 herein. At the option of the manufacturer, marking of the country of origin may be omitted from the body of the microcircuit, but shall be retained on the initial container. The "JAN" or "J" certification mark shall not be used for device types 02, 03, and 09.

TABLE II. Electrical test requirements.

MIL-STD-883 test requirements	Subgroups (see table III) Class S devices 1/	Class B devices
Interim electrical parameters (method 5004)	1	1
Final electrical test parameters (method 5004)	1*,2,3,7 9,10,11	1*,2,3, 7,9
Group A test requirements (method 5005)	1,2,3,7 8,9,10,11	1,2,3,7,8 9,10,11
Group C and D end-point electrical parameters (method 5005)	1,2,3	1,2,3
Additional electrical subgroups for group C periodic inspections	N/A	N/A

1/ Class S product assurance is not applicable to device types 02, 03, and 09.
*PDA applies to subgroup 1 (see 4.2c)).

3.7 Microcircuit group assignment. The devices covered by this specification shall be in microcircuit group number 4 (see MIL-M-38510, appendix E).

3.8 Manufacturer eligibility. To be eligible to supply microcircuits to this specification, a manufacturer shall have a manufacturer certification in accordance with MIL-M-38510 for at least one line, not necessarily the line producing the device described herein. This shall apply only for device types 02, 03, and 09.

3.9 Certification. Certification in accordance with MIL-M-38510 is not required for device types 02, 03, and 09, but shall be retained for the remaining device types.

4. QUALITY ASSURANCE PROVISIONS

4.1 Sampling and inspection. Sampling and inspection procedures shall be in accordance with MIL-M-38510 and methods 5005 and 5007, as applicable, of MIL-STD-883, except as modified herein.

4.2 Screening. Screening shall be in accordance with method 5004 of MIL-STD-883, and shall be conducted on device types 01, 04, 05, 06, 07, and 08 prior to qualification and quality conformance inspection, and on device types 02, 03, and 09 prior to quality conformance inspection. The following additional criteria shall apply:

a. Burn-in (method 1015 of MIL-STD-883).

(1) Test condition D or E, using the circuit shown on figure 4, or equivalent.

(2) T_A = +125°C minimum.

b. Interim and final electrical test parameters shall be as specified in table II, except interim electrical parameters test prior to burn-in is optional at the discretion of the manufacturer.

c. The percent defective allowable (PDA) shall be as specified in MIL-M-38510.

Device types 01, 02, 03, 04, and 05 1/

Cases E and F

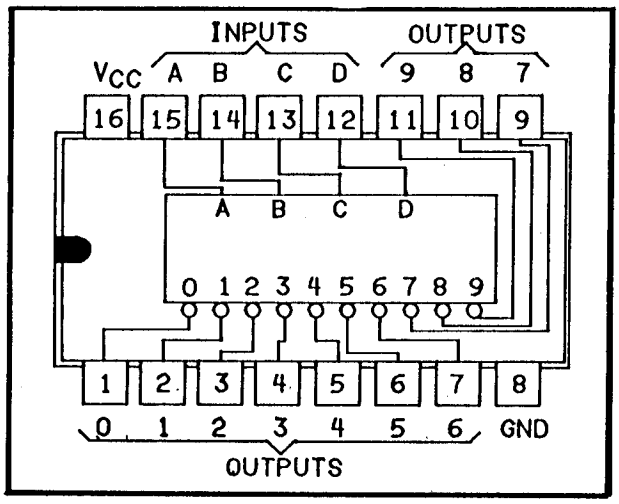

Device types 06 and 07

Cases E and F

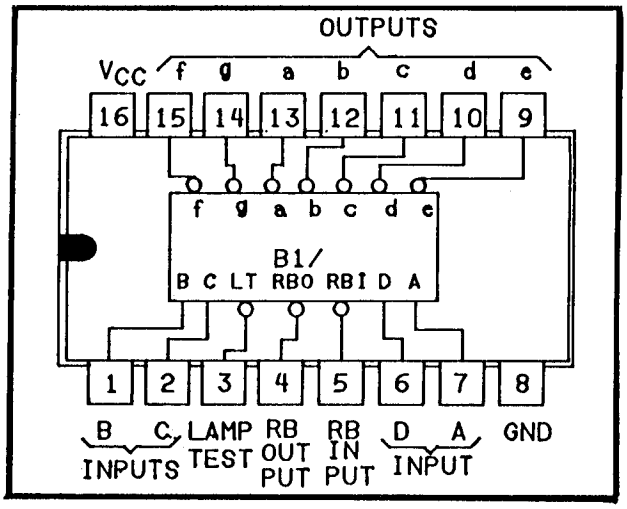

Device type 08

Cases E and F

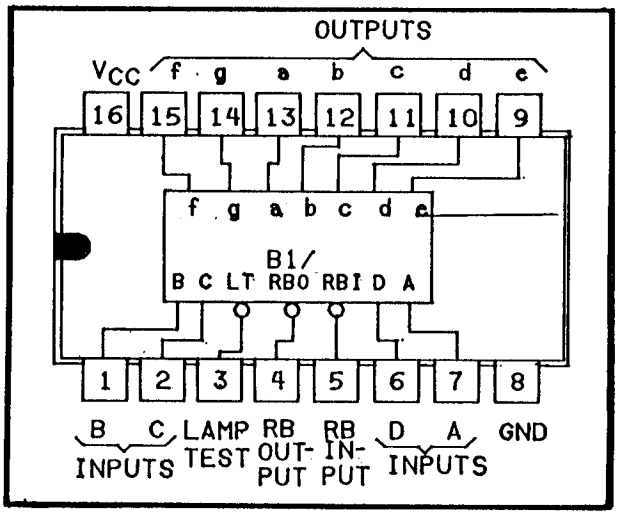

Device type 09 1/

Cases A, B, C or D

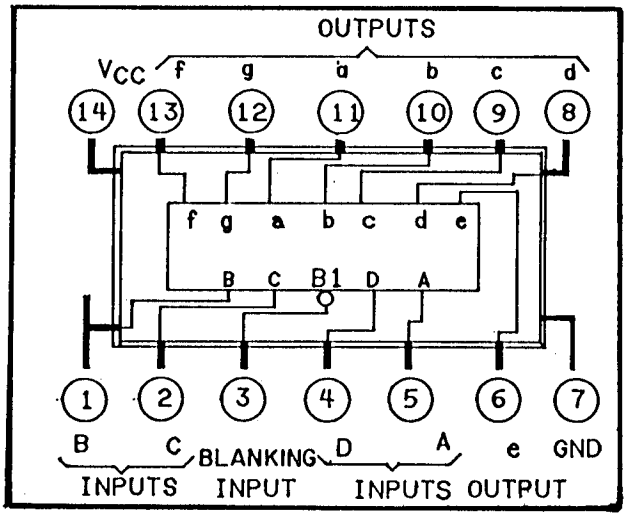

1/ Qualification requirements are removed for device types 02, 03, 09.

FIGURE 1. Terminal connections.

Device types 01, 04, and 05

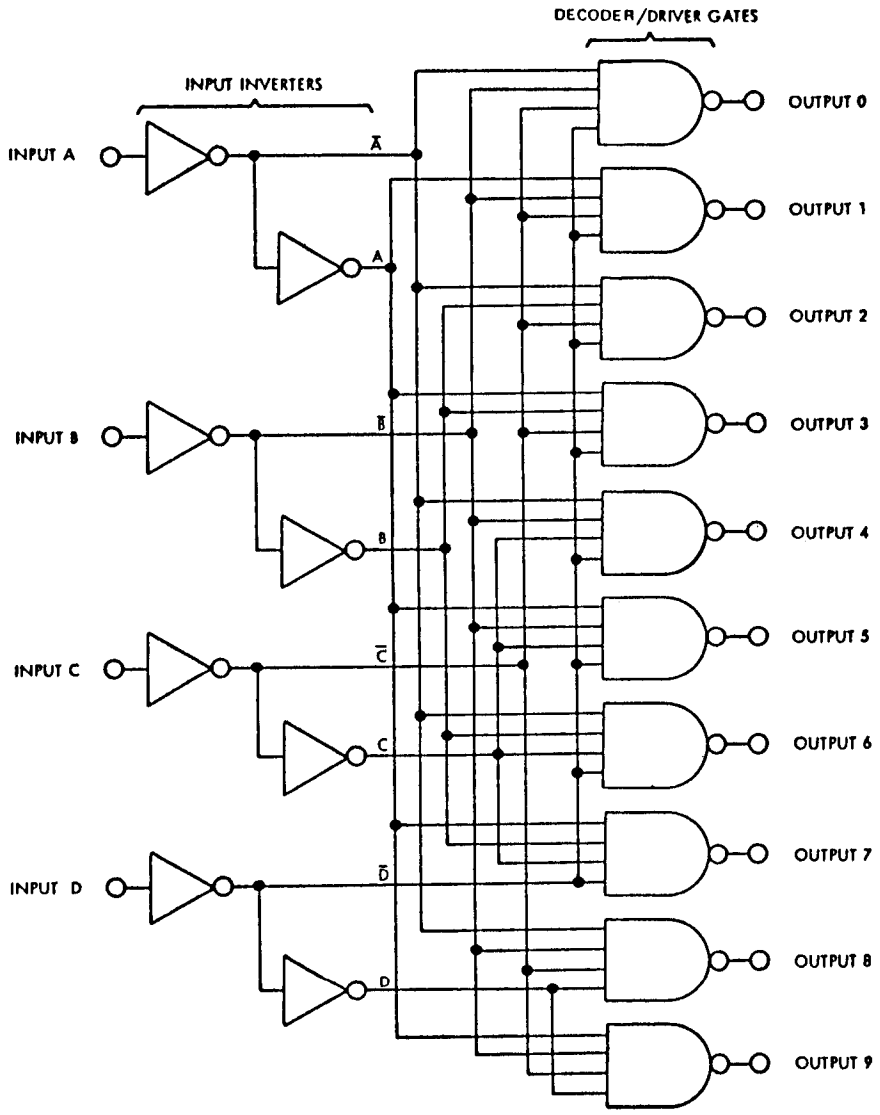

FIGURE 2. Logic diagrams.

Device type 02 1/

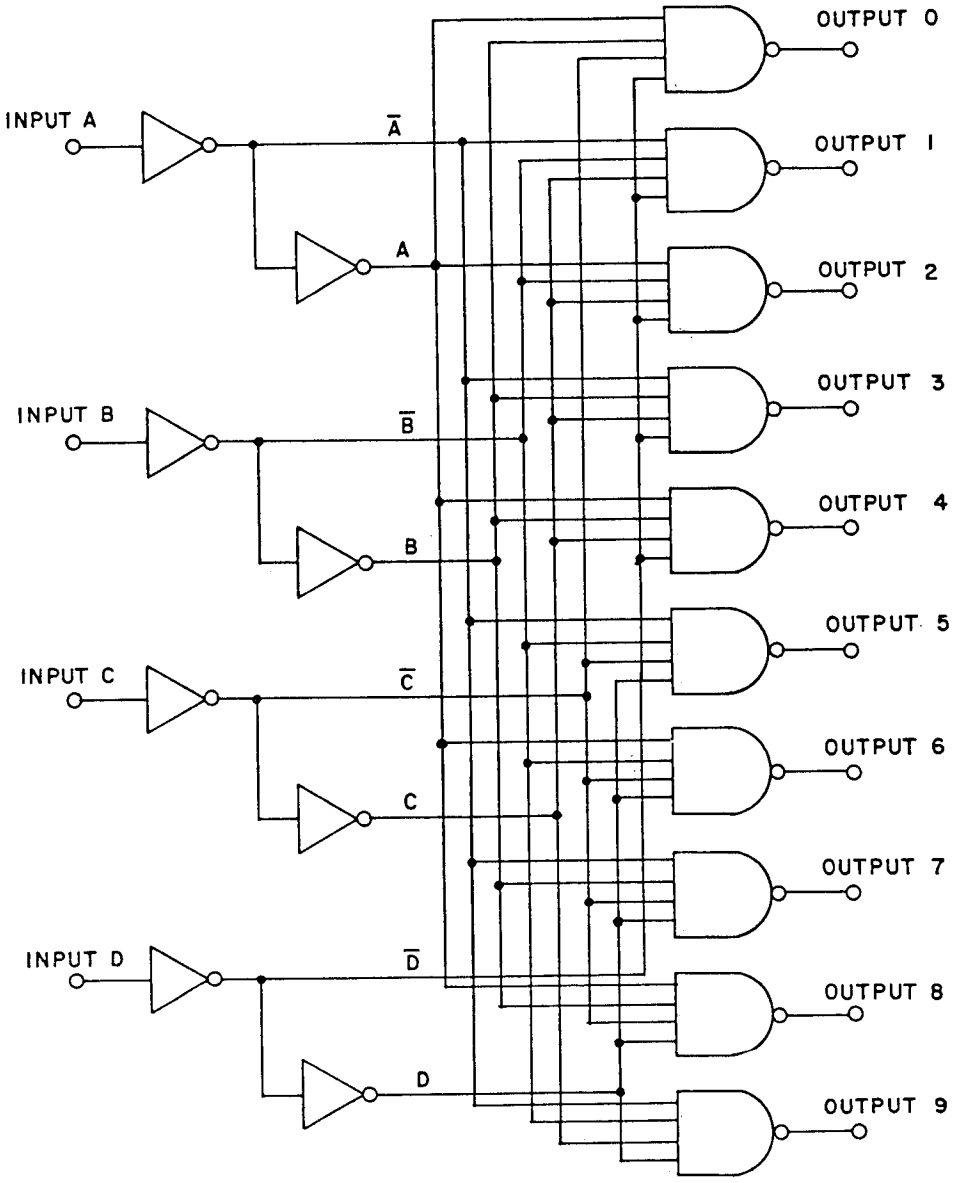

1/ Qualification requirements are removed for this device type.

FIGURE 2. Logic diagrams. (Continued)

Device type 03 1/

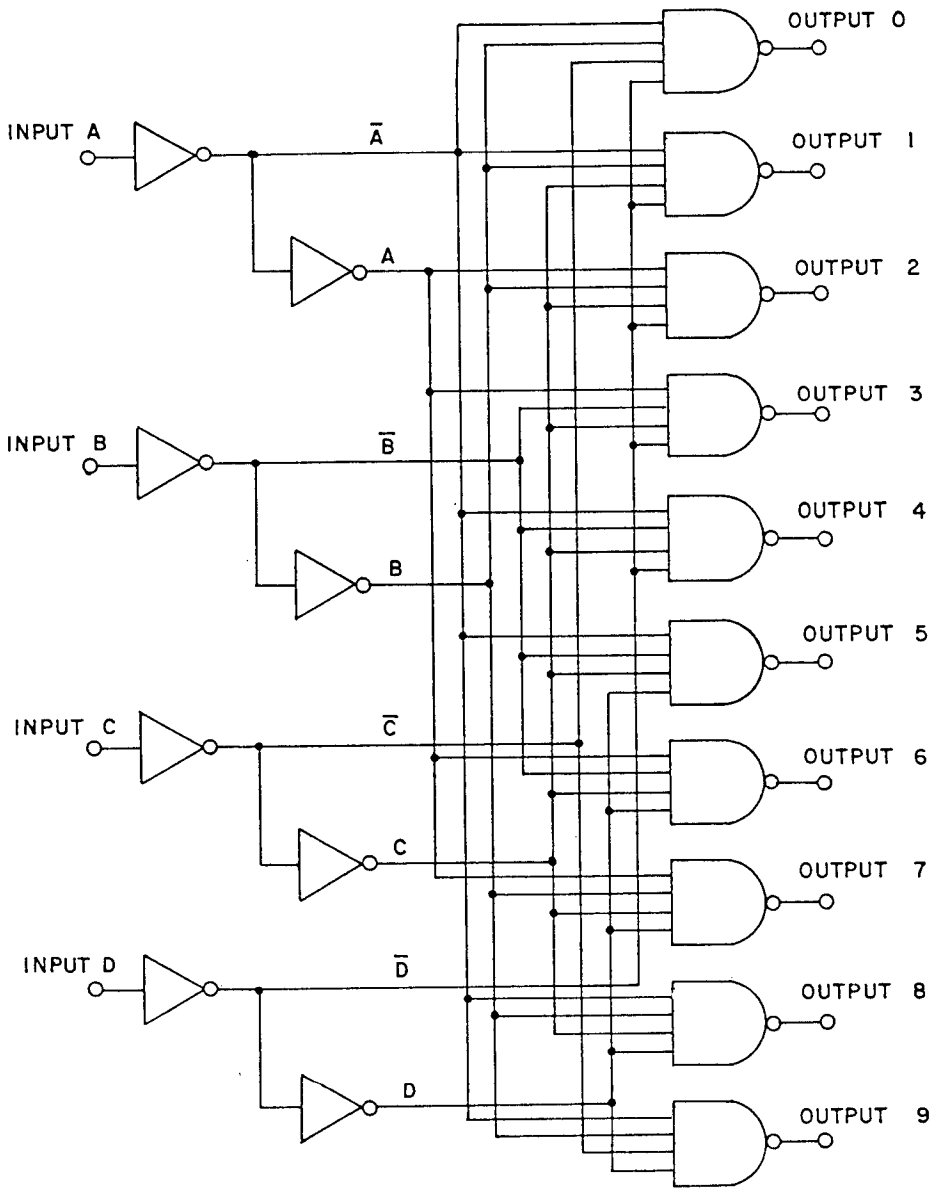

1/ Qualification requirements are removed for this device type.

FIGURE 2. Logic diagrams. (Continued)

Device types 06 and 07

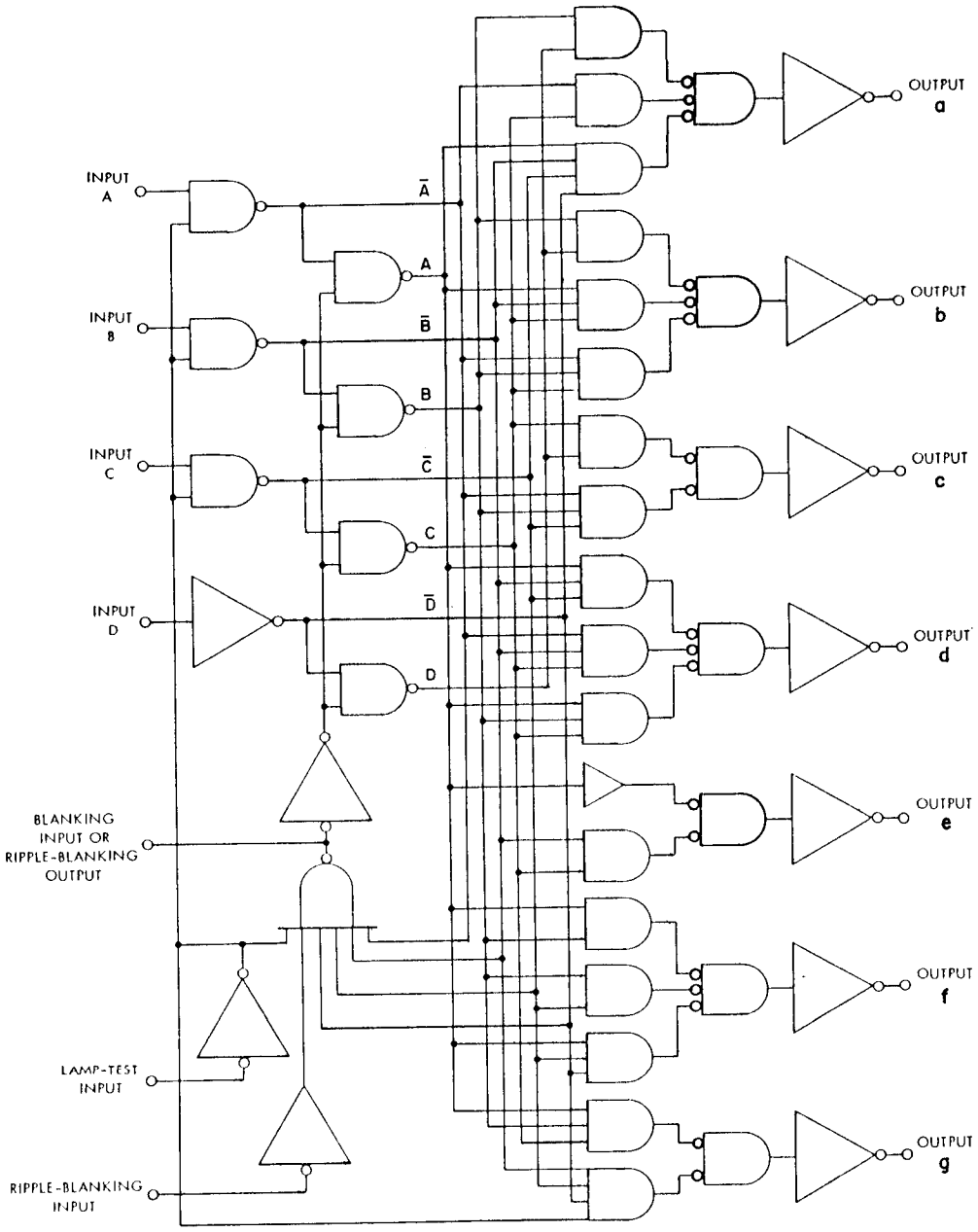

FIGURE 2. Logic diagrams. (Continued)

Device type 08

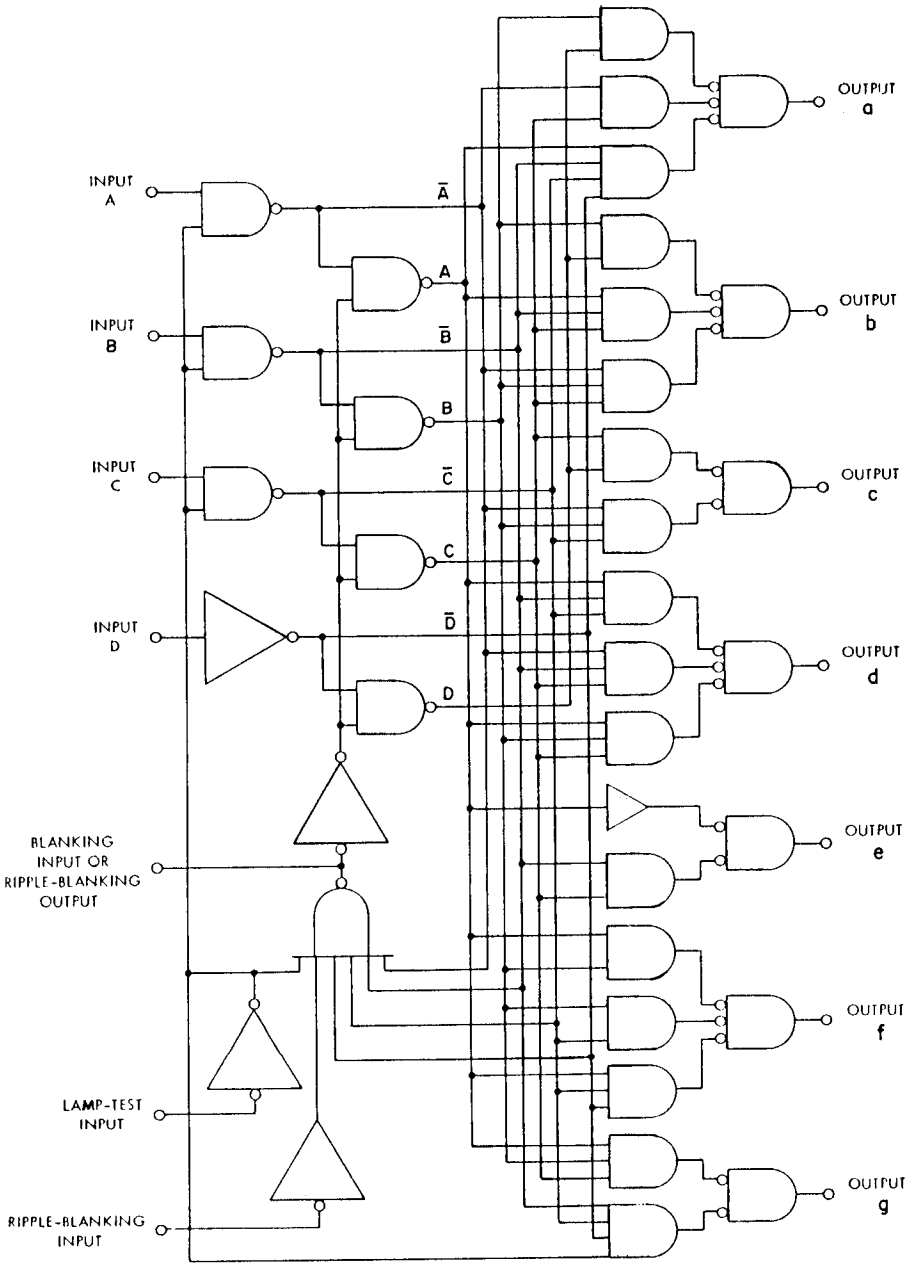

FIGURE 2. Logic diagrams. (Continued)

Device type 09 1/

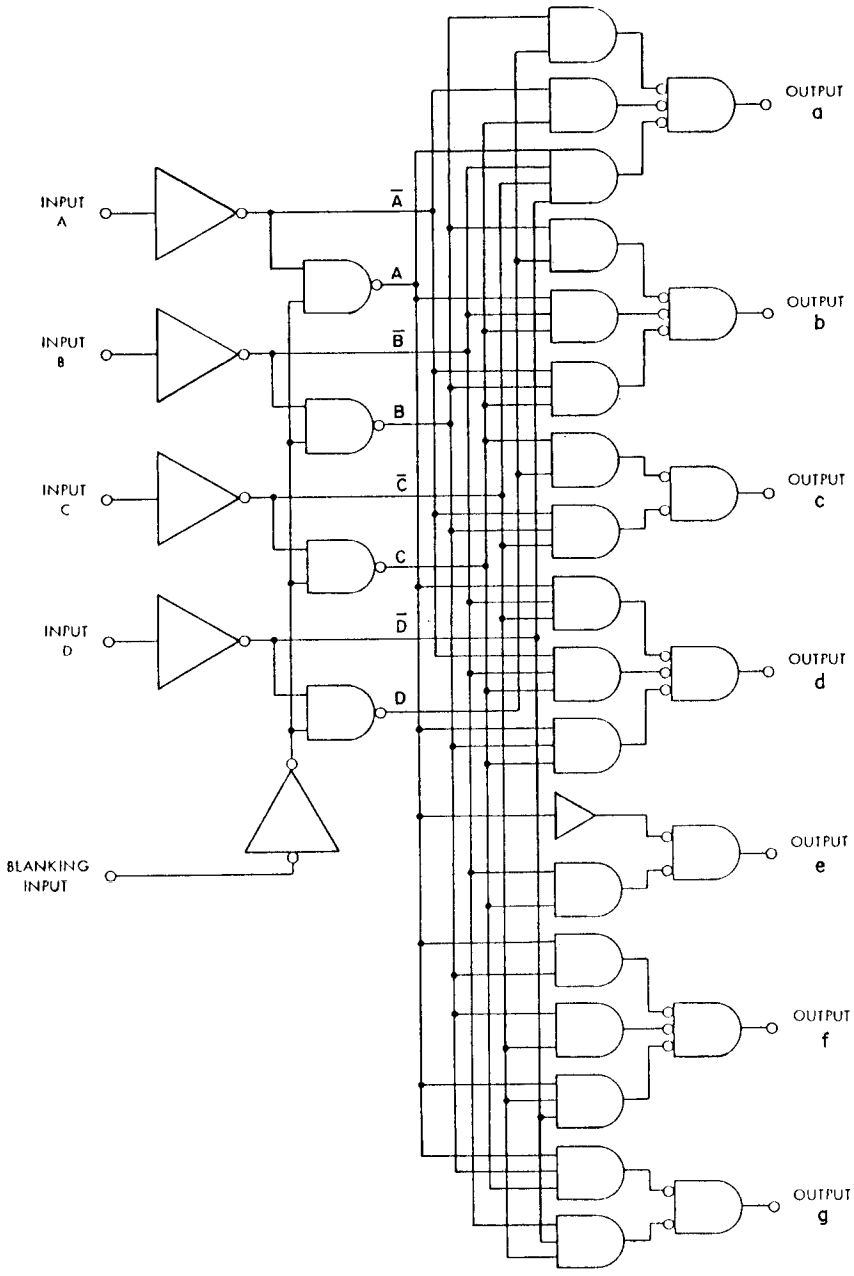

1/ Qualification requirements are removed for this device type.

FIGURE 2. Logic diagrams. (Continued)

Device types 01, 04 and 05

INPUTS				OUTPUTS									
D	C	B	A	0	1	2	3	4	5	6	7	8	9
L	L	L	L	L	H	H	H	H	H	H	H	H	H
L	L	L	H	H	L	H	H	H	H	H	H	H	H
L	L	H	L	H	H	L	H	H	H	H	H	H	H
L	L	H	H	H	H	H	L	H	H	H	H	H	H
L	H	L	L	H	H	H	H	L	H	H	H	H	H
L	H	L	H	H	H	H	H	H	L	H	H	H	H
L	H	H	L	H	H	H	H	H	H	L	H	H	H
L	H	H	H	H	H	H	H	H	H	H	L	H	H
H	L	L	L	H	H	H	H	H	H	H	H	L	H
H	L	L	H	H	H	H	H	H	H	H	H	H	L
H	L	H	L	H	H	H	H	H	H	H	H	H	H
H	L	H	H	H	H	H	H	H	H	H	H	H	H
H	H	L	L	H	H	H	H	H	H	H	H	H	H
H	H	L	H	H	H	H	H	H	H	H	H	H	H
H	H	H	L	H	H	H	H	H	H	H	H	H	H
H	H	H	H	H	H	H	H	H	H	H	H	H	H

FIGURE 3. Truth tables.

Device type 02 1/

INPUTS				OUTPUTS									
D	C	B	A	0	1	2	3	4	5	6	7	8	9
L	L	H	H	L	H	H	H	H	H	H	H	H	H
L	H	L	L	H	L	H	H	H	H	H	H	H	H
L	H	L	H	H	H	L	H	H	H	H	H	H	H
L	H	H	L	H	H	H	L	H	H	H	H	H	H
L	H	H	H	H	H	H	H	L	H	H	H	H	H
H	L	L	L	H	H	H	H	H	L	H	H	H	H
H	L	L	H	H	H	H	H	H	H	L	H	H	H
H	L	H	L	H	H	H	H	H	H	H	L	H	H
H	L	H	H	H	H	H	H	H	H	H	H	L	H
H	H	L	L	H	H	H	H	H	H	H	H	H	L
H	H	L	H	H	H	H	H	H	H	H	H	H	H
H	H	H	L	H	H	H	H	H	H	H	H	H	H
H	H	H	H	H	H	H	H	H	H	H	H	H	H
L	L	L	L	H	H	H	H	H	H	H	H	H	H
L	L	L	H	H	H	H	H	H	H	H	H	H	H
L	L	H	L	H	H	H	H	H	H	H	H	H	H

Device type 03 1/

INPUTS				OUTPUTS									
D	C	B	A	0	1	2	3	4	5	6	7	8	9
L	L	H	L	L	H	H	H	H	H	H	H	H	H
L	H	H	L	H	L	H	H	H	H	H	H	H	H
L	H	H	H	H	H	L	H	H	H	H	H	H	H
L	H	L	H	H	H	H	L	H	H	H	H	H	H
L	H	L	L	H	H	H	H	L	H	H	H	H	H
H	H	L	L	H	H	H	H	H	L	H	H	H	H
H	H	L	H	H	H	H	H	H	H	L	H	H	H
H	H	H	H	H	H	H	H	H	H	H	L	H	H
H	H	H	L	H	H	H	H	H	H	H	H	L	H
H	L	H	L	H	H	H	H	H	H	H	H	H	L
H	L	H	H	H	H	H	H	H	H	H	H	H	H
H	L	L	H	H	H	H	H	H	H	H	H	H	H
H	L	L	L	H	H	H	H	H	H	H	H	H	H
L	L	L	L	H	H	H	H	H	H	H	H	H	H
L	L	L	H	H	H	H	H	H	H	H	H	H	H
L	L	H	H	H	H	H	H	H	H	H	H	H	H

1/ Qualification requirements are removed for this device type.

FIGURE 3. Truth tables. (Continued)

Device type 06 and 07

	INPUTS							OUTPUTS							
DECIMAL OR FUNCTION	LT	RBI	D	C	B	A	BI/RBO	a	b	c	d	d	f	g	NOTE
0	H	H	L	L	L	L	H	L	L	L	L	L	L	H	1
1	H	X	L	L	L	H	H	H	L	L	H	H	H	H	1
2	H	X	L	L	H	L	H	L	L	H	L	L	H	L	
3	H	X	L	L	H	H	H	L	L	L	L	H	H	L	
4	H	X	L	H	L	L	H	H	L	L	H	H	L	L	
5	H	X	L	H	L	H	H	L	H	L	L	H	L	L	
6	H	X	L	H	H	L	H	H	H	L	L	L	L	L	
7	H	X	L	H	H	H	H	L	L	L	H	H	H	H	
8	H	X	H	L	L	L	H	L	L	L	L	L	L	L	
9	H	X	H	L	L	H	H	L	L	L	H	H	L	L	
10	H	X	H	L	H	L	H	H	H	H	L	L	H	L	
11	H	X	H	L	H	H	H	H	H	L	L	H	H	L	
12	H	X	H	H	L	L	H	H	L	H	H	H	L	L	
13	H	X	H	H	L	H	H	L	H	H	L	H	L	L	
14	H	X	H	H	H	L	H	H	H	H	L	L	L	L	
15	H	X	H	H	H	H	H	H	H	H	H	H	H	H	
BI	X	X	X	X	X	X	L	H	H	H	H	H	H	H	2
RBI	H	L	L	L	L	L	L	H	H	H	H	H	H	H	3
LT	L	X	X	X	X	X	H	L	L	L	L	L	L	L	4

NOTES:

1. BI/RBO is wire-OR logic serving as blanking input (BI) and/or ripple-blanking output (RBO). The blanking input must be open or held at a high logic level when output functions 0 through 15 are desired, and ripple-blanking input (RBI) must be open or at a high logic level during the decimal 0 output. X = input may be high or low.
2. When a low logic level is applied to the blanking input (forced condition) all segment outputs go to a low logic level regardless of the state of any other input condition.
3. When ripple-blanking input (RBI) is at a low logic level, lamp test input is at high logic level and A = B = C = D = low logic level, all segment outputs go to a low logic level and the ripple-blanking output goes to a low logic level (response condition).
4. When blanking input/ripple-blanking output is open or held at a high logic level, and a low logic level is applied to lamp-test input, all segment outputs go to a high logic level.

FIGURE 3. Truth tables (Continued)

Device type 08

DECIMAL OR FUNCTION	INPUTS LT	RBI	D	C	B	A	BI/RBO	OUTPUTS a	b	c	d	d	f	g	NOTE
0	H	H	L	L	L	L	H	H	H	H	H	H	H	L	1
1	H	X	L	L	L	H	H	L	H	H	L	L	L	L	1
2	H	X	L	L	H	L	H	H	H	L	H	H	L	H	
3	H	X	L	L	H	H	H	H	H	H	H	L	L	H	
4	H	X	L	H	L	L	H	L	H	H	L	L	H	H	
5	H	X	L	H	L	H	H	H	L	H	H	L	H	H	
6	H	X	L	H	H	L	H	L	L	H	H	H	H	H	
7	H	X	L	H	H	H	H	H	H	H	L	L	L	L	
8	H	X	H	L	L	L	H	H	H	H	H	H	H	H	
9	H	X	H	L	L	H	H	H	H	H	L	L	H	H	
10	H	X	H	L	H	L	H	L	L	L	H	H	L	H	
11	H	X	H	L	H	H	H	L	L	H	H	L	L	H	
12	H	X	H	H	L	L	H	L	H	L	L	L	H	H	
13	H	X	H	H	L	H	H	H	L	L	H	L	H	H	
14	H	X	H	H	H	L	H	L	L	L	H	H	H	H	
15	H	X	H	H	H	H	H	L	L	L	L	L	L	L	
BI	X	X	X	X	X	X	L	L	L	L	L	L	L	L	2
RBI	H	L	L	L	L	L	L	L	L	L	L	L	L	L	3
LT	L	X	X	X	X	X	H	H	H	H	H	H	H	H	4

NOTES:

1. BI/RBO is wire-OR logic serving as blanking input (BI) and/or ripple-blanking output (RBO). The blanking input must be open or held at a high logic level when output functions 0 through 15 are desired, and ripple-blanking input (RBI) must be open or at a high logic level during the decimal 0 output. X = input may be high or low.
2. When a low logic level is applied to the blanking input (forced condition) all segment outputs go to a low logic level regardless of the state of any other input condition.
3. When ripple-blanking input (RBI) is at a low logic level, lamp test input is at high logic level and A = B = C = D = low logic level, all segment outputs go to a low logic level and the ripple-blanking output goes to a low logic level (response condition).
4. When blanking input/ripple-blanking output is open or held at a high logic level, and a low logic level is applied to lamp-test input, all segment outputs go to a high logic level.

FIGURE 3. Truth tables (Continued)

Device type 09

DECIMAL OR FUNCTION	INPUTS D	C	B	A	BI	OUTPUTS a	b	c	d	e	f	g	NOTE
0	L	L	L	L	H	H	H	H	H	H	H	L	1
1	L	L	L	H	H	L	H	H	L	L	L	L	
2	L	L	H	L	H	H	H	L	H	H	L	H	
3	L	L	H	H	H	H	H	H	H	L	L	H	
4	L	H	L	L	H	L	H	H	L	L	H	H	
5	L	H	L	H	H	H	L	H	H	L	H	H	
6	L	H	H	L	H	L	L	H	H	H	H	H	
7	L	H	H	H	H	H	H	H	L	L	L	L	
8	H	L	L	L	H	H	H	H	H	H	H	H	
9	H	L	L	H	H	H	H	H	L	L	H	H	
10	H	L	H	L	H	L	L	L	H	H	L	H	
11	H	L	H	H	H	L	L	H	H	L	L	H	
12	H	H	L	L	H	L	H	L	L	L	H	H	
13	H	H	L	H	H	H	L	L	H	L	H	H	
14	H	H	H	L	H	L	L	L	H	H	H	H	
15	H	H	H	H	H	L	L	L	L	L	L	L	
BI	X	X	X	X	L	L	L	L	L	L	L	L	2

NOTES:
1. The blanking input must be open or held at a high logic level when output functions 0 through 15 are desired.
2. When a low logic level is applied to the blanking input all segment outputs go to a low logic level regardless of the state of any other input condition. X = input may be high or low.
3. Qualification requirements are removed for this device type.

FIGURE 3. Truth tables. (Continued)

Device type 01, 02, and 03

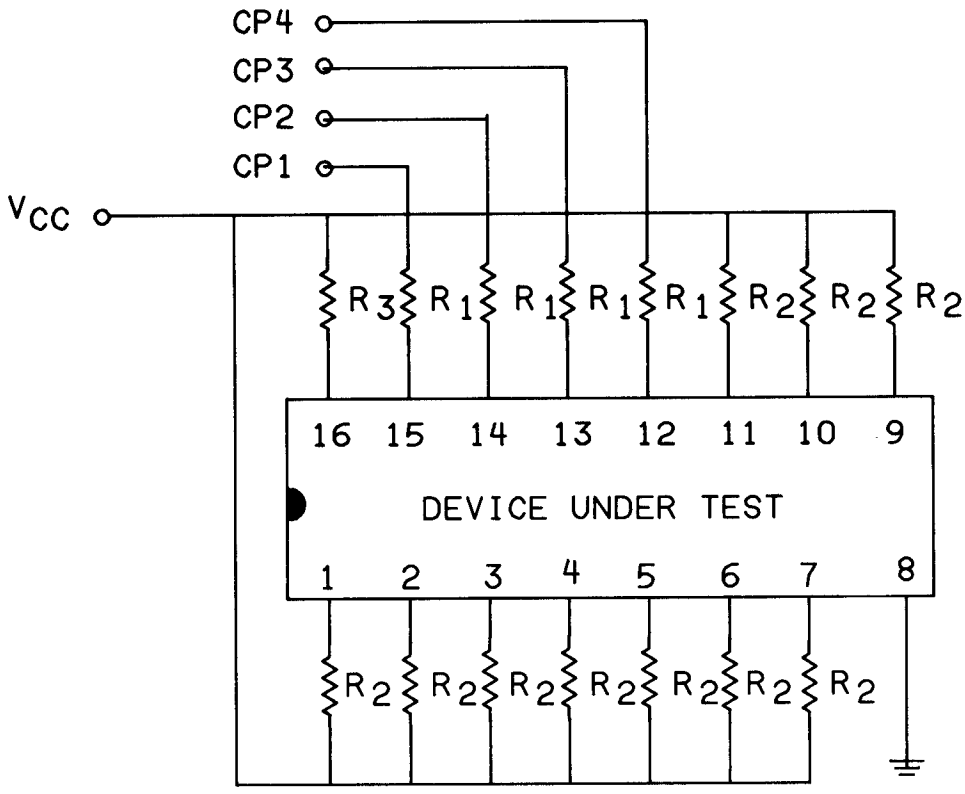

NOTES:
1. V_{CC} is such that the minimum voltage at the device terminals is 5 volts.
2. R_1 = 27Ω ±5%; R_2 = 270Ω ±5%; R_3 = 4.7Ω ±5%.
3. CP1 -- 100 kHz, with minimum V_{IN} = 3 V, and minimum duty cycle of 50%.
   CP2 -- 50 kHz, with minimum V_{IN} = 3 V, and minimum duty cycle of 50%.
   CP3 -- 25 kHz, with minimum V_{IN} = 3 V, and minimum duty cycle of 50%.
   CP4 -- 12.5 kHz, with minimum V_{IN} = 3 V, and minimum duty cycle of 50%.
4. Qualification requirements are removed for device types 02, 03.

FIGURE 4. Burn-in and life test circuit.

Device types 04 and 05

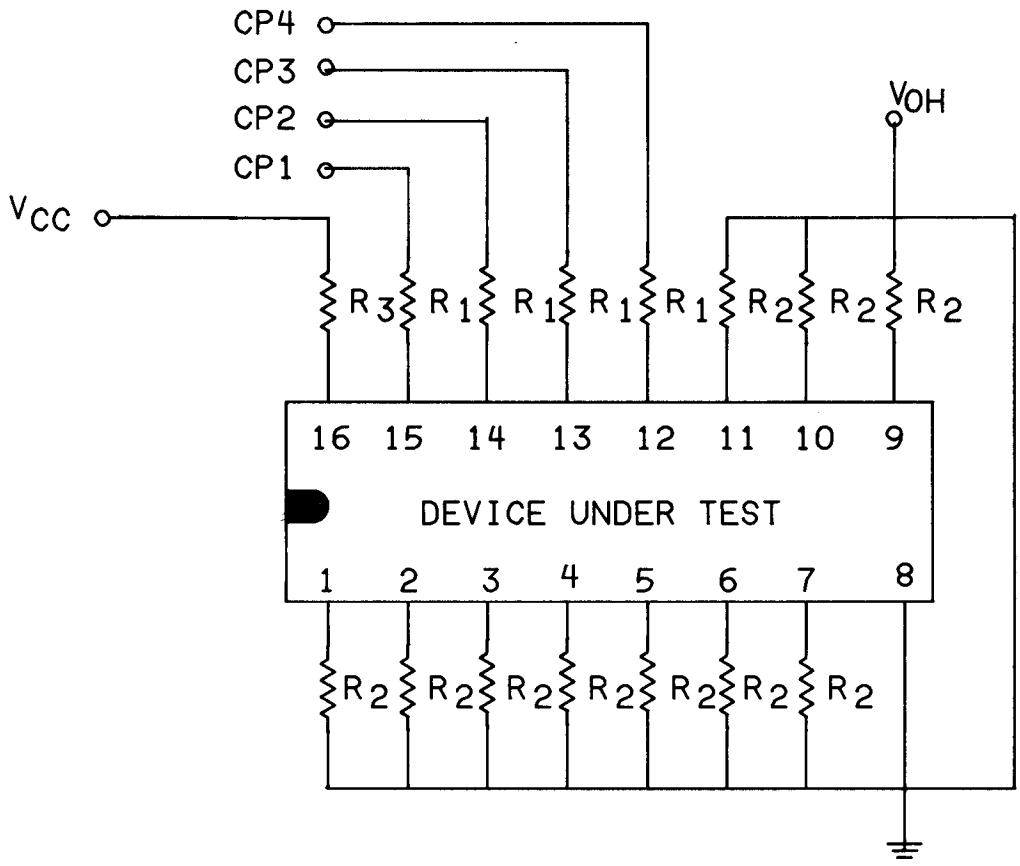

NOTES:
1. V_{CC} is such that the minimum voltage at the device terminals is 5 volts.
2. R_1 = 27Ω ±5%; R_3 = 4.7Ω ±5%.
3. R_2 = 400Ω ±5% for device type 04.
   R_2 = 200Ω ±5% for device type 05.
4. V_{OH} is such that the minimum voltage at the device terminals is 30 volts for device type 04 and 15 volts for device type 05.
5. CP1 -- 100 kHz, with minimum V_{IN} = 3 V, and minimum duty cycle of 50%.
   CP2 -- 50 kHz, with minimum V_{IN} = 3 V, and minimum duty cycle of 50%.
   CP3 -- 25 kHz, with minimum V_{IN} = 3 V, and minimum duty cycle of 50%.
   CP4 -- 12.5 kHz, with minimum V_{IN} = 3 V, and minimum duty cycle of 50%.

FIGURE 4. Burn-in and life test circuit - Continued.

Device types 06 and 07

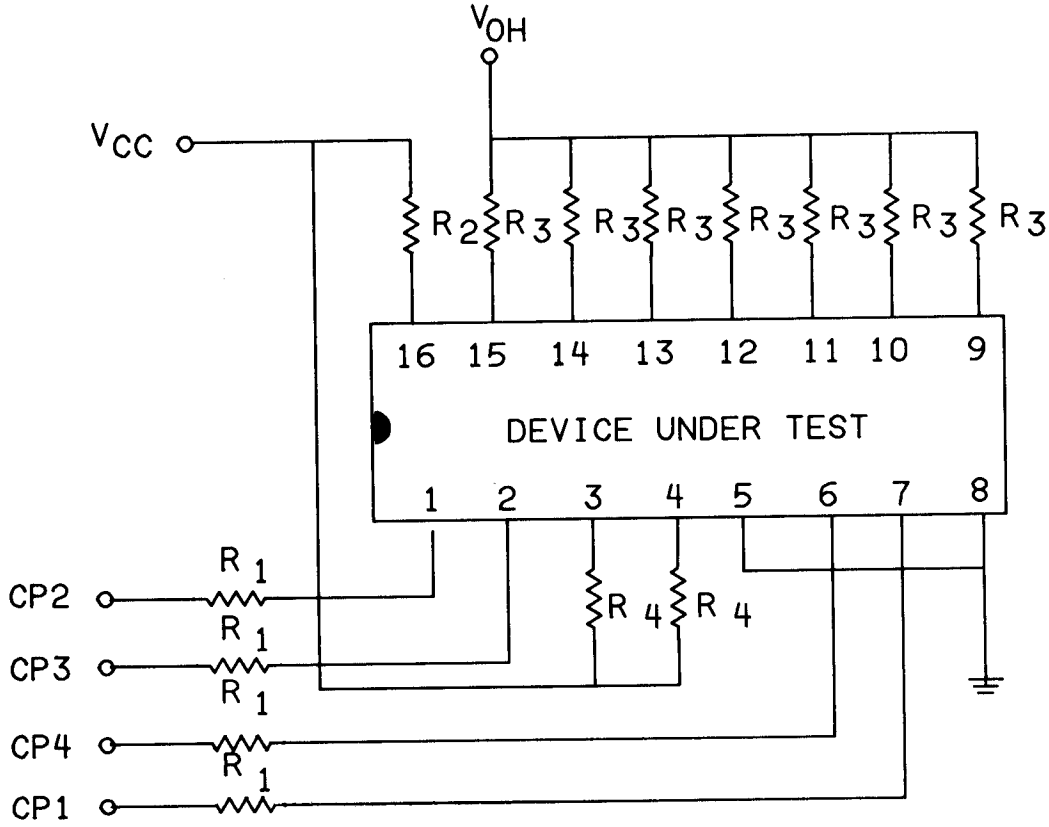

NOTES:
1. V_{CC} is such that the minimum voltage at the device terminals is 5 volts.
2. R_1 = 27Ω ±5%; R_2 = 4.7Ω ±5%; R_4 = 560Ω ±5%.
3. R_3 = 830Ω ±5% for device type 06.
   R_3 = 470Ω ±5% for device type 07.
4. V_{OH} is such that the minimum voltage at the device terminals is 30 volts for device type 06 and 15 volts for device type 07.
5. CP1 -- 100 kHz, with minimum V_{IN} = 3 V, and minimum duty cycle of 50%.
   CP2 -- 50 kHz, with minimum V_{IN} = 3 V, and minimum duty cycle of 50%.
   CP3 -- 25 kHz, with minimum V_{IN} = 3 V, and minimum duty cycle of 50%.
   CP4 -- 12.5 kHz, with minimum V_{IN} = 3 V, and minimum duty cycle of 50%.

FIGURE 4. Burn-in and life test circuit - Continued.

Device type 08

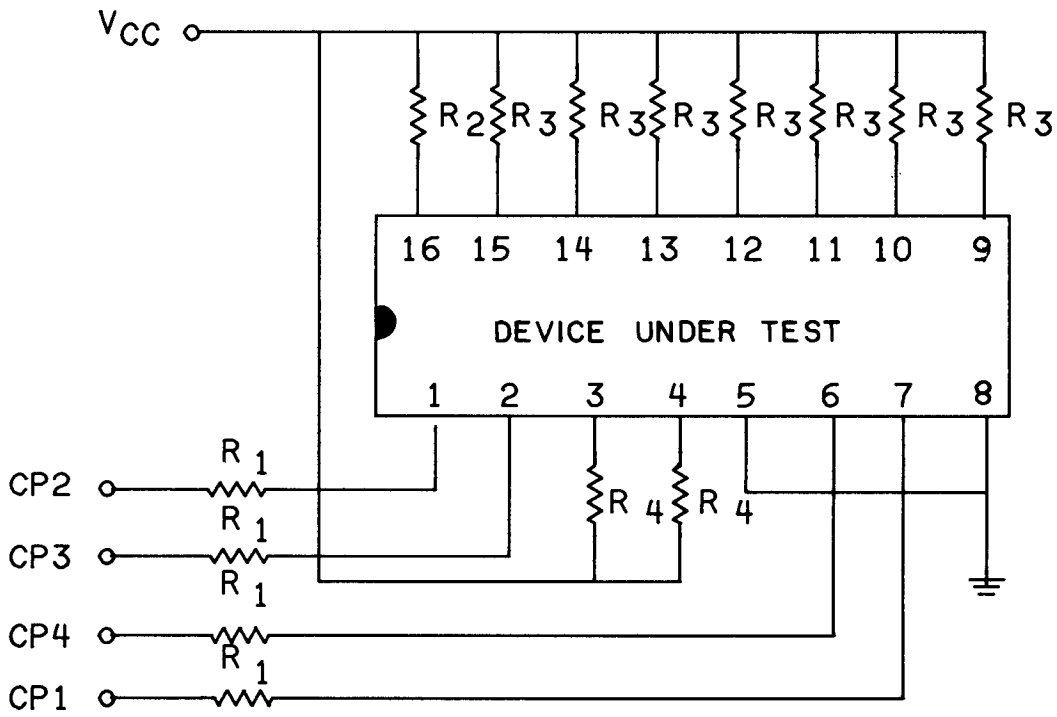

NOTES:
1. V_{CC} is such that the minimum voltage at the device terminals is 5 volts.
2. R_1 = 27Ω ±5%; R_2 = 4.7Ω ±5%; R_3 = 820Ω ±5%; R_4 = 560Ω ±5%.
3. CP1 -- 100 kHz, with minimum V_{IN} = 3 V, and minimum duty cycle of 50%.
   CP2 -- 50 kHz, with minimum V_{IN} = 3 V, and minimum duty cycle of 50%.
   CP3 -- 25 kHz, with minimum V_{IN} = 3 V, and minimum duty cycle of 50%.
   CP4 -- 12.5 kHz, with minimum V_{IN} = 3 V, and minimum duty cycle of 50%.

FIGURE 4. Burn-in and life test circuit - Continued.

Device type 09

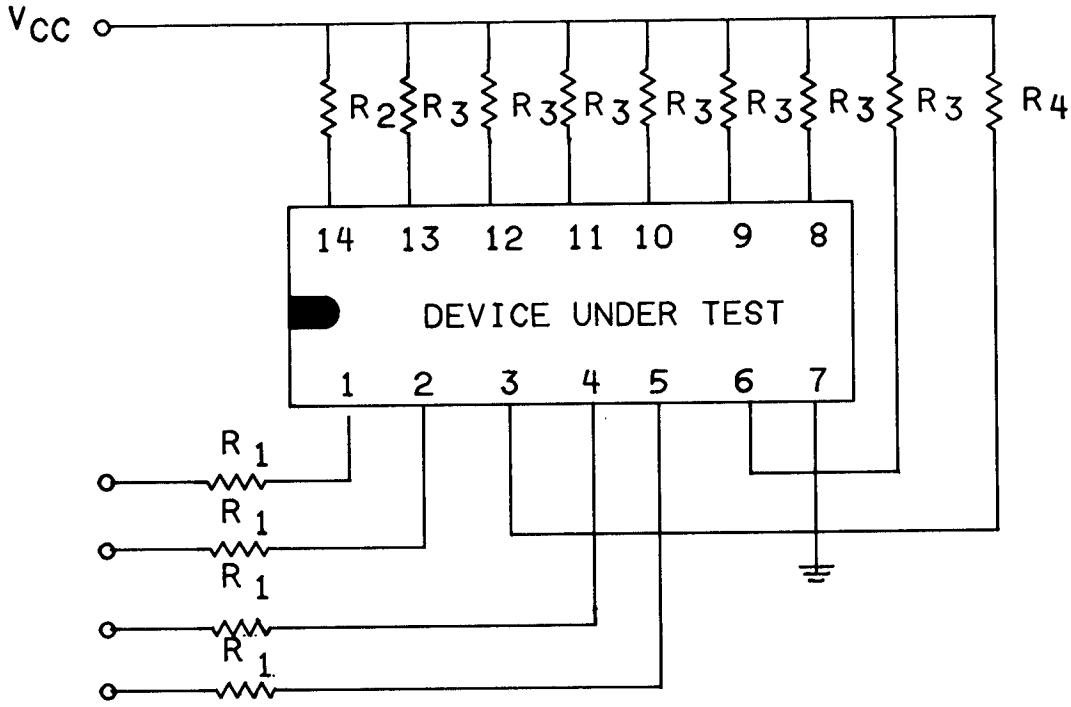

NOTES:
1. V_{CC} is such that the minimum voltage at the device terminals is 5 volts.
2. R_1 = 27Ω ±5%; R_2 = 4.7Ω ±5%; R_3 = 470Ω ±5%; R_4 = 1 kΩ ±5%.
3. CP1 -- 100 kHz, with minimum V_{IN} = 3 V, and minimum duty cycle of 50%.
   CP2 -- 50 kHz, with minimum V_{IN} = 3 V, and minimum duty cycle of 50%.
   CP3 -- 25 kHz, with minimum V_{IN} = 3 V, and minimum duty cycle of 50%.
   CP4 -- 12.5 kHz, with minimum V_{IN} = 3 V, and minimum duty cycle of 50%.
4. Qualification requirements are removed for this device type.

FIGURE 4. Burn-in and life test circuit - Continued.

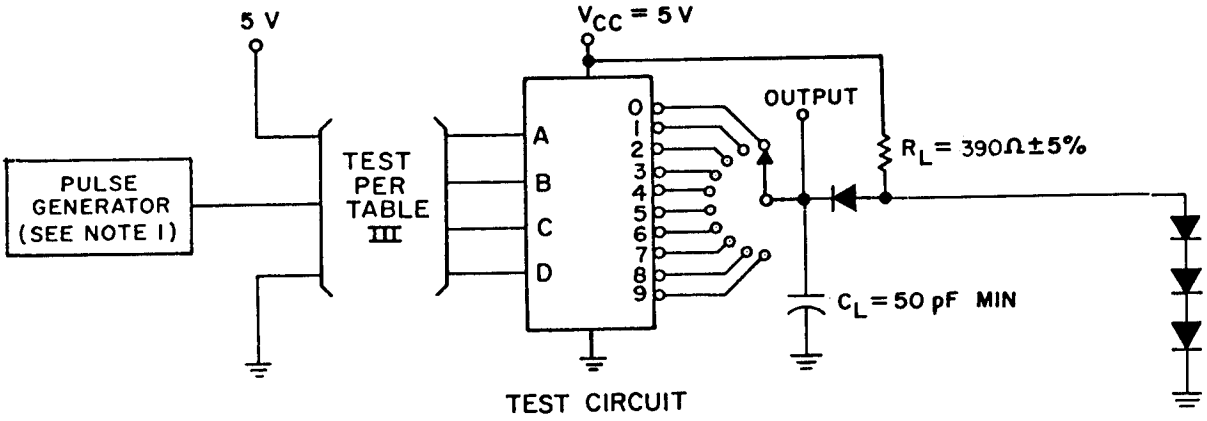

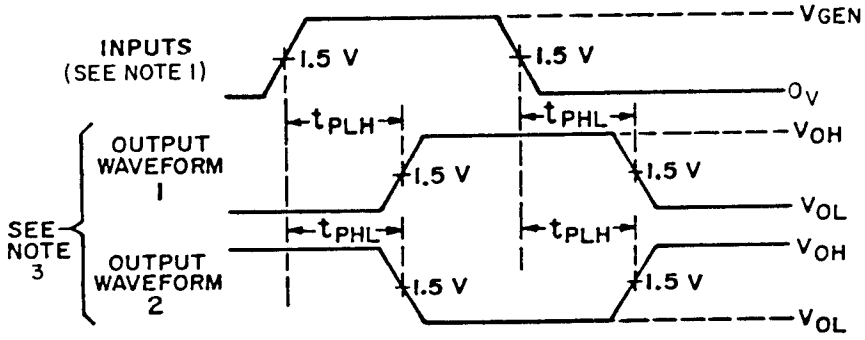

NOTES:
1. The pulse generator has the following characteristics: V_{gen} = 3.0 V minimum, t_{TLH} (0.7 V to 2.7 V) and t_{THL} (2.7 V to 0.7 V) $\leq$ 10 ns, PRR = 1 MHz, and minimum duty cycle = 50%.
2. C_L includes probe and jig capacitance.
3. Input - output waveform combination in accordance with the truth tables (see figure 3).
4. All diodes are 1N3064 or equivalent.
5. Qualification requirements are removed for device types 02, 03.

FIGURE 5. Switching times for device types 01, 02, and 03.

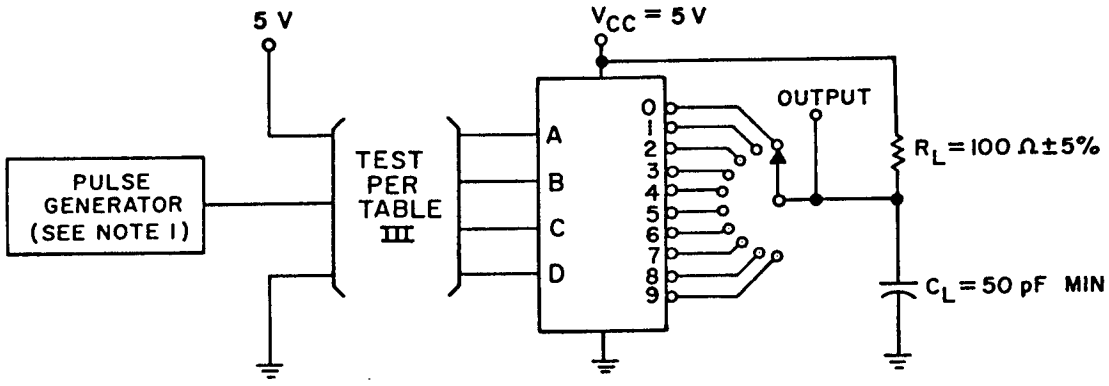

TEST CIRCUIT

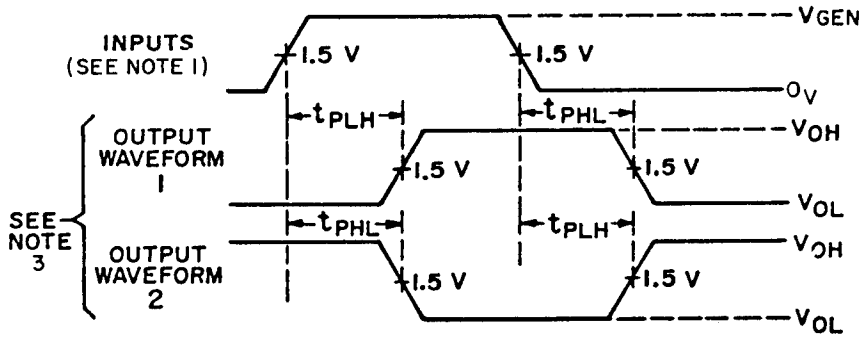

NOTES:
1. The pulse generator has the following characteristics: V_{gen} = 3.0 V minimum, t_{TLH} (0.7 V to 2.7 V) and t_{THL} (2.7 V to 0.7 V) $\leq$ 10 ns, PRR = 1 MHz, and minimum duty cycle = 50%.
2. C_L includes probe and jig capacitance.
3. Input - output waveform combination in accordance with the truth tables (see figure 3).

FIGURE 6. Switching times for device types 04 and 05.

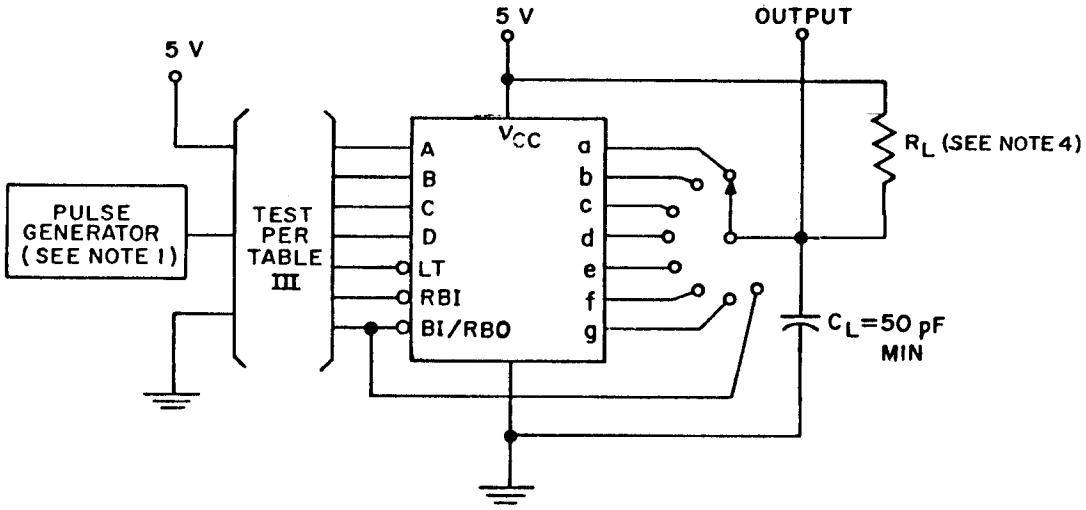

TEST CIRCUIT

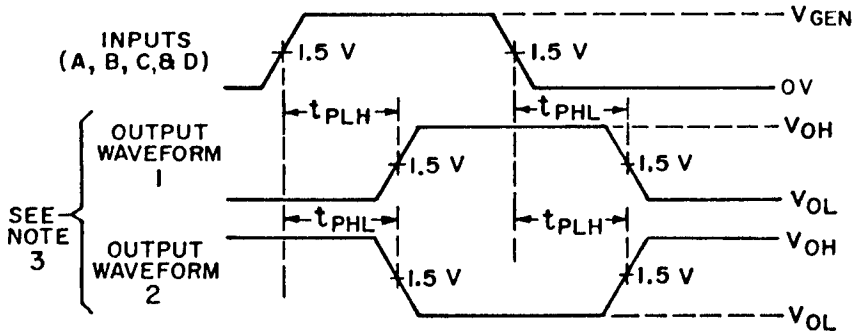

NOTES:
1. The pulse generator has the following characteristics: V_{gen} = 3.0 V minimum, t_{TLH} (0.7 V to 2.7 V) and t_{THL} (2.7 V to 0.7 V) $\leq$ 10 ns, PRR = 1 MHz, and minimum duty cycle = 50%.
2. C_L includes probe and jig capacitance.
3. Input - output waveform combination in accordance with the truth tables (see figure 3).
4. R_L = 120Ω ±5% for outputs a thru g; R_L - 560Ω ±5% for output BI/RBO.

FIGURE 7. Switching times for device types 06 and 07.

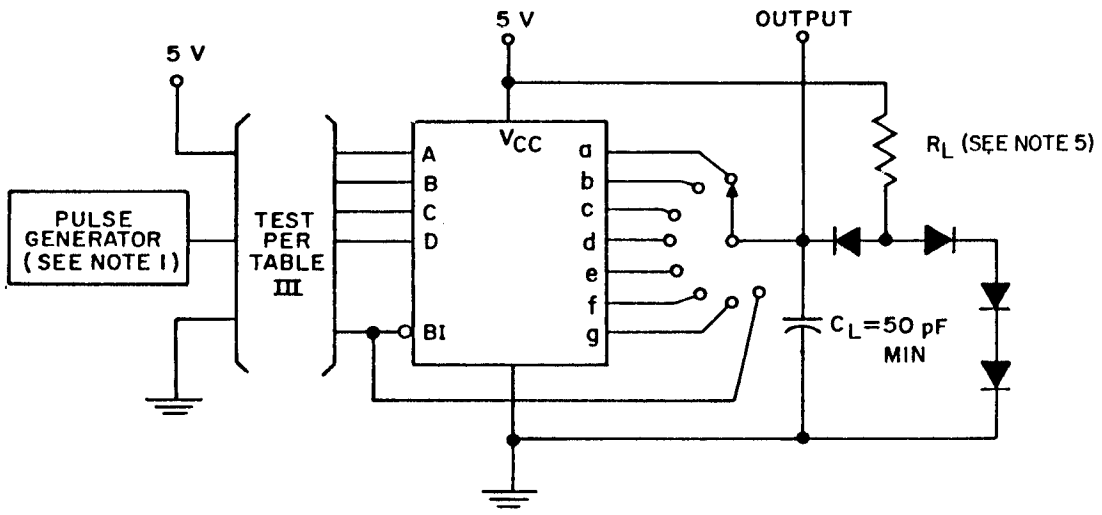

TEST CIRCUIT

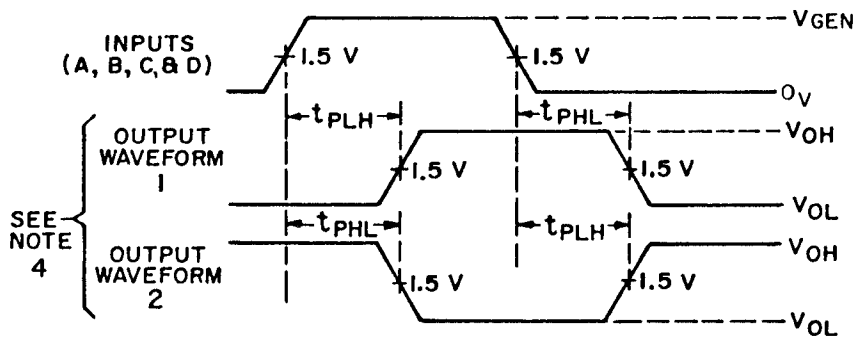

NOTES:
1. The pulse generator has the following characteristics: V_{gen} = 3.0 V minimum, t_{TLH} (0.7 V to 2.7 V) and t_{THL} (2.7 V to 0.7 V) $\leq$ 10 ns, PRR = 1 MHz, and minimum duty cycle = 50%.
2. C_L includes probe and jig capacitance.
3. All diodes are 1N3064 or equivalent.
4. Input - output waveform combination in accordance with the truth tables (see figure 3).
5. R_L = 750Ω ±5% for outputs a thru g; R_L - 560Ω ±5% for output BI/RBO.

FIGURE 8. Switching times for device type 08.

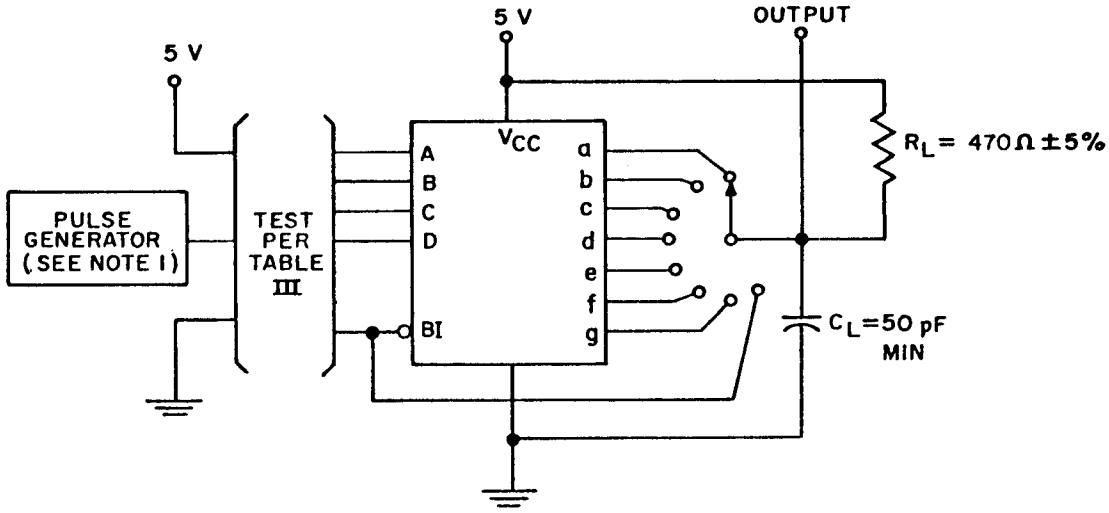

TEST CIRCUIT

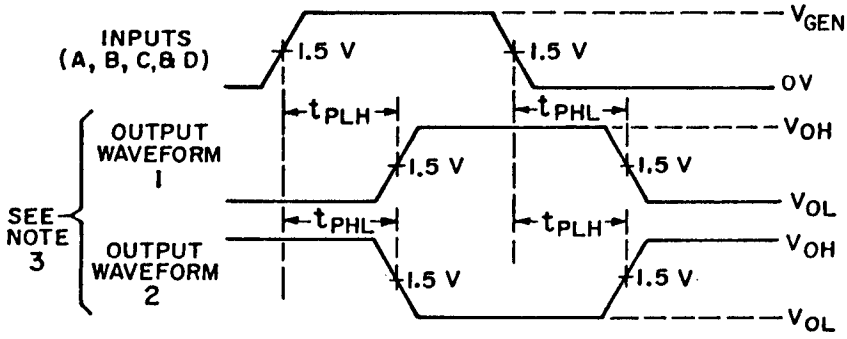

NOTES:
1. The pulse generator has the following characteristics: V_{gen} = 3.0 V minimum, t_{TLH} (0.7 V to 2.7 V) and t_{THL} (2.7 V to 0.7 V) $\leq$ 10 ns, PRR = 1 MHz, and minimum duty cycle = 50%.
2. C_L includes probe and jig capacitance.
3. Input - output waveform combination in accordance with the truth tables (see figure 3).
4. Qualification requirements are removed for this device type.

FIGURE 9. Switching times for device type 09.

TABLE III. Group A inspection for device type 01.
Terminal conditions (pins not designated may be high ≥ 2.4 V or low ≤ 0.8 V or open).

Subgroup	Symbol	MIL-STD-883 method	Cases E,F Test no.	1	2	3	4	5	6	7	8	9	10	11	12	13	14	15	16	Measured terminal	Test limits Min	Test limits Max	Unit
				0	1	2	3	4	5	6	GND	7	8	9	D	C	B	A	V_{CC}				
1 T_C = 25°C	V_{OH}	3006	1	-.8 mA							GND				2.0 V	2.0 V	2.0 V	2.0 V	4.5 V	0	2.4		V
		"	2		-.8 mA						"				"	"	"	"	"	1	"		"
		"	3			-.8 mA					"				"	"	"	"	"	2	"		"
		"	4				-.8 mA				"				"	"	"	"	"	3	"		"
		"	5					-.8 mA			"				"	"	"	"	"	4	"		"
		"	6						-.8 mA		"				"	"	"	"	"	5	"		"
		"	7							-.8 mA	"				"	"	"	"	"	6	"		"
		"	8								"	-.8 mA			"	"	"	"	"	7	"		"
		"	9								"		-.8 mA		"	"	"	"	"	8	"		"
		"	10								"			-.8 mA	"	"	"	"	"	9	"		"
	V_{OL}	3007	11	16 mA							"				0.8 V	0.8 V	0.8 V	0.8 V	"	0		0.4	V
		"	12		16 mA						"				"	"	0.8 V	2.0 V	"	1		"	"
		"	13			16 mA					"				"	"	2.0 V	0.8 V	"	2		"	"
		"	14				16 mA				"				"	"	2.0 V	2.0 V	"	3		"	"
		"	15					16 mA			"				"	2.0 V	0.8 V	0.8 V	"	4		"	"
		"	16						16 mA		"				"	"	0.8 V	2.0 V	"	5		"	"
		"	17							16 mA	"				"	"	2.0 V	0.8 V	"	6		"	"
		"	18								"	16 mA			"	"	2.0 V	2.0 V	"	7		"	"
		"	19								"		16 mA		2.0 V	0.8 V	0.8 V	0.8 V	"	8		"	"
		"	20								"			16 mA	2.0 V	0.8 V	0.8 V	2.0 V	"	9		"	"
	V_{IC}		21								"							-12 mA	"	A		-1.5	V
			22								"						-12 mA		"	B		"	"
			23								"					-12 mA			"	C		"	"
			24								"				-12 mA				"	D		"	"
	I_{IH1}	3010	25								"				GND	GND	GND	2.4 V	5.5 V	A		40	μA
		"	26								"				"	GND	2.4 V	GND	"	B		"	"
		"	27								"				"	2.4 V	GND	"	"	C		"	"
		"	28								"				2.4 V	GND	"	"	"	D		"	"
	I_{IH2}	3010	29								"				GND	"	"	5.5 V	"	A		100	μA
		"	30								"				"	"	5.5 V	GND	"	B		"	"
		"	31								"				"	5.5 V	GND	"	"	C		"	"
		"	32								"				5.5 V	GND	GND	"	"	D		"	"
	I_{IL}	3009	33								"				"	5.5 V	5.5 V	0.4 V	"	A	-.7	-1.6	mA
		"	34								"				"	5.5 V	0.4 V	5.5 V	"	B	"	"	"
		"	35								"				"	0.4 V	5.5 V	"	"	C	"	"	"
		"	36								"				0.4 V	5.5 V	5.5 V	"	"	D	"	"	"
	I_{OS}	3011	37	GND							"				5.5 V	5.5 V	5.5 V	5.5 V	5.5 V	0	-20	-55	mA
		"	38		GND						"				"	"	"	"	"	1	"	"	"
		"	39			GND					"				"	"	"	"	"	2	"	"	"
		"	40				GND				"				"	"	"	"	"	3	"	"	"
		"	41					GND			"				"	"	"	"	"	4	"	"	"
		"	42						GND		"				"	"	"	"	"	5	"	"	"
		"	43							GND	"				"	"	"	"	"	6	"	"	"
		"	44								"	GND			"	"	"	"	"	7	"	"	"
		"	45								"		GND		"	"	"	"	"	8	"	"	"
		"	46								"			GND	"	"	"	"	"	9	"	"	"
	I_{CC}	3005	47								"				GND	GND	GND	GND	"	V_{CC}		41	mA
2	Same tests, terminal conditions and limits as for subgroup 1, except T_C = 125°C and V_{IC} tests are omitted.																						
3	Same tests, terminal conditions and limits as for subgroup 1, except T_C = -55°C and V_{IC} tests are omitted.																						

See note at end of device type 01.

TABLE III. Group A inspection for device type 01 - Continued.
Terminal conditions (pins not designated may be high ≥ 2.4 V or low ≤ 0.8 V or open).

Subgroup	Symbol	MIL-STD-883 method	Cases E,F Test no.	1	2	3	4	5	6	7	8	9	10	11	12	13	14	15	16	Measured terminal	Test limits Min	Test limits Max	Unit
				0	1	2	3	4	5	6	GND	7	8	9	D	C	B	A	V_{CC}				
7 T_C = 25°C	Truth table test		48	L	H	H	H	H	H	H	GND	H	H	H	GND	GND	GND	GND	5.0 V				
			49	H	L	H	"	"	"	"	"	"	"	"	"	"	GND	5.0 V	"				
			50	"	H	L	"	"	"	"	"	"	"	"	"	"	5.0 V	GND	"				
			51	"	"	H	L	"	"	"	"	"	"	"	"	"	5.0 V	5.0 V	"				
			52	"	"	"	H	L	"	"	"	"	"	"	"	5.0 V	GND	GND	"				
			53	"	"	"	"	H	L	"	"	"	"	"	"	"	GND	5.0 V	"				
			54	"	"	"	"	"	H	L	"	"	"	"	"	"	5.0 V	GND	"				
			55	"	"	"	"	"	"	H	"	L	"	"	"	"	5.0 V	5.0 V	"				
			56	"	"	"	"	"	"	"	"	H	L	"	5.0 V	GND	GND	GND	"		See note		
			57	"	"	"	"	"	"	"	"	"	H	L	"	"	GND	5.0 V	"				
			58	"	"	"	"	"	"	"	"	"	"	H	"	"	5.0 V	GND	"				
			59	"	"	"	"	"	"	"	"	"	"	"	"	"	5.0 V	5.0 V	"				
			60	"	"	"	"	"	"	"	"	"	"	"	"	5.0 V	GND	GND	"				
			61	"	"	"	"	"	"	"	"	"	"	"	"	"	GND	5.0 V	"				
			62	"	"	"	"	"	"	"	"	"	"	"	"	"	5.0 V	GND	"				
			63	"	"	"	"	"	"	"	"	"	"	"	"	"	5.0 V	5.0 V	"				
8 T_C = 25°C	Truth table test		64 thru 79	Same tests as subgroup 7, except T_C = 125°C.																			
	Truth table test		80 thru 95	Same tests as subgroup 7, except T_C = -55°C.																			
9 T_C = 25°C	t_{PHL} t_{PLH}	3003 (Fig. 6)	96 & 97	OUT							GND				GND	GND	GND	IN	5.0 V	A to 0	5	32	ns
			98 & 99		OUT						"				"	"	"	"	"	A to 1	"	37	"
			100 & 101								"	OUT			"	5.0 V	5.0 V	"	"	A to 7	"	37	"
			102 & 103		OUT						"				"	GND	IN	5.0 V	"	B to 1	"	32	"
			104 & 105					OUT			"				"	5.0 V	"	GND	"	B to 4	"	32	"
			106 & 107			OUT					"				"	GND	"	GND	"	B to 2	"	37	"
			108 & 109			OUT					"				"	IN	5.0 V	GND	"	C to 2	"	32	"
			110 & 111				OUT				"				"	"	5.0 V	5.0 V	"	C to 3	"	"	"
			112 & 113								"		OUT		5.0 V	"	GND	GND	"	C to 8	"	"	"
			114 & 115								"			OUT	"	"	"	5.0 V	"	C to 9	"	"	"
			116 & 117					OUT			"				GND	"	"	GND	"	C to 4	"	37	"
			118 & 119						OUT		"				"	"	"	5.0 V	"	C to 5	"	"	"
			120 & 121							OUT	"				"	"	5.0 V	GND	"	C to 6	"	"	"
			122 & 123								"	OUT			"	"	"	5.0 V	"	C to 7	"	"	"
			124 & 125				OUT				"				IN	GND	"	5.0 V	"	D to 3	"	32	"
			126 & 127					OUT			"				"	5.0 V	GND	GND	"	D to 4	"	"	"
			128 & 129						OUT		"				"	"	GND	5.0 V	"	D to 5	"	"	"
			130 & 131							OUT	"				"	"	5.0 V	GND	"	D to 6	"	"	"
			132 & 133								"	OUT			"	"	5.0 V	5.0 V	"	D to 7	"	"	"
			134 & 135								"		OUT		"	GND	GND	GND	"	D to 8	"	37	"
			136 & 137								"			OUT	"	"	"	5.0 V	"	D to 9	"	37	"
10 T_C = 125°C		"	138 & 139	OUT							"				GND	"	"	IN	"	A to 0	"	39	"
		"	140 & 141		OUT						"				"	"	"	"	"	A to 1	"	46	"
		"	142 & 143								"	OUT			"	5.0 V	5.0 V	"	"	A to 7	"	"	"
		"	144 & 145		OUT						"				"	GND	IN	5.0 V	"	B to 1	"	39	"
		"	146 & 147					OUT			"				"	5.0 V	"	GND	"	B to 4	"	39	"
		"	148 & 149			OUT					"				"	GND	"	GND	"	B to 2	"	46	"
		"	150 & 151			OUT					"				"	IN	5.0 V	GND	"	C to 2	"	39	"
		"	152 & 153				OUT				"				"	"	5.0 V	5.0 V	"	C to 3	"	"	"
		"	154 & 155								"		OUT		5.0 V	"	GND	GND	"	C to 8	"	"	"
		"	156 & 157								"			OUT	"	"	"	5.0 V	"	C to 9	"	"	"
		"	158 & 159					OUT			"				GND	"	"	GND	"	C to 4	"	46	"
		"	160 & 161						OUT		"				"	"	"	5.0 V	"	C to 5	"	"	"
		"	162 & 163							OUT	"				"	"	5.0 V	GND	"	C to 6	"	"	"
		"	164 & 165								"	OUT			"	"	"	5.0 V	"	C to 7	"	"	"
		"	166 & 167				OUT				"				IN	GND	"	5.0 V	"	D to 3	"	39	"
		"	168 & 169					OUT			"				"	5.0 V	GND	GND	"	D to 4	"	"	"
		"	170 & 171						OUT		"				"	"	GND	5.0 V	"	D to 5	"	"	"
		"	172 & 173							OUT	"				"	"	5.0 V	GND	"	D to 6	"	"	"
		"	174 & 175								"	OUT			"	"	5.0 V	5.0 V	"	D to 7	"	"	"
		"	176 & 177								"		OUT		"	GND	GND	GND	"	D to 8	"	46	"
		"	178 & 179								"			OUT	"	"	"	5.0 V	"	D to 9	"	46	"
11	Same tests, terminal conditions and limits as for subgroup 10 except T_C = -55°C.																						

NOTE:
Output voltages shall be either.
(a) H = 2.4 volts minimum and L = 0.4 volts maximum when using a high speed checker double comparator, or
(b) H ≥ 1.5 volts and L ≤ 1.5 volts when using a high speed checker single comparator.

TABLE III. Group A inspection for device type 02. 1/
Terminal conditions (pins not designated may be high ≥ 2.4 V or low ≤ 0.8 V or open).

Subgroup	Symbol	MIL-STD-883 method	Case E Test no.	1	2	3	4	5	6	7	8	9	10	11	12	13	14	15	16	Measured terminal	Test limits Min	Test limits Max	Unit
				0	1	2	3	4	5	6	GND	7	8	9	D	C	B	A	V_{CC}				
1 T_C = 25°C	V_{OH}	3006	1	-.8 mA							GND				2.0 V	2.0 V	2.0 V	2.0 V	4.5 V	0	2.4		V
		"	2		-.8 mA						"				"	"	"	"	"	1	"		"
		"	3			-.8 mA					"				"	"	"	"	"	2	"		"
		"	4				-.8 mA				"				"	"	"	"	"	3	"		"
		"	5					-.8 mA			"				"	"	"	"	"	4	"		"
		"	6						-.8 mA		"				"	"	"	"	"	5	"		"
		"	7							-.8 mA	"				"	"	"	"	"	6	"		"
		"	8								"	-.8 mA			"	"	"	"	"	7	"		"
		"	9								"		-.8 mA		"	"	"	"	"	8	"		"
		"	10								"			-.8 mA	"	"	"	"	"	9	"		"
	V_{OL}	3007	11	16 mA							"				0.8 V	0.8 V	2.0 V	2.0 V	"	0		0.4	"
		"	12		16 mA						"				"	2.0 V	0.8 V	0.8 V	"	1		"	"
		"	13			16 mA					"				"	"	0.8 V	2.0 V	"	2		"	"
		"	14				16 mA				"				"	"	2.0 V	0.8 V	"	3		"	"
		"	15					16 mA			"				"	"	2.0 V	2.0 V	"	4		"	"
		"	16						16 mA		"				2.0 V	0.8 V	0.8 V	0.8 V	"	5		"	"
		"	17							16 mA	"				"	"	0.8 V	2.0 V	"	6		"	"
		"	18								"	16 mA			"	"	2.0 V	0.8 V	"	7		"	"
		"	19								"		16 mA		"	"	2.0 V	2.0 V	"	8		"	"
		"	20								"			16 mA	"	0.8 V	0.8 V	0.8 V	"	9		"	"
	V_{IC}		21								"							-12 mA	"	A		-1.5	V
			22								"						-12 mA		"	B		"	"
			23								"					-12 mA			"	C		"	"
			24								"				-12 mA				"	D		"	"
	V_{IH1}	3010	25								"				GND	GND	GND	2.4 V	5.5 V	A		40	μA
		"	26								"				"	GND	2.4 V	GND	"	B		"	"
		"	27								"				"	2.4 V	GND	"	"	C		"	"
		"	28								"				2.4 V	GND	"	"	"	D		"	"
	I_{IH2}	3010	29								"				GND	"	"	5.5 V	"	A		100	μA
		"	30								"				"	"	5.5 V	GND	"	B		"	"
		"	31								"				"	5.5 V	GND	"	"	C		"	"
		"	32								"				5.5 V	GND	GND	"	"	D		"	"
	I_{IL}	3009	33								"				"	5.5 V	5.5 V	0.4 V	"	A	-.7	-1.6	mA
		"	34								"				"	5.5 V	0.4 V	5.5 V	"	B	"	"	"
		"	35								"				"	0.4 V	5.5 V	"	"	C	"	"	"
		"	36								"				0.4 V	5.5 V	5.5 V	"	"	D	"	"	"
	I_{OS}	3011	37	GND							"				5.5 V	5.5 V	5.5 V	5.5 V	5.5 V	0	-20	-55	mA
		"	38		GND						"				"	"	"	"	"	1	"	"	"
		"	39			GND					"				"	"	"	"	"	2	"	"	"
		"	40				GND				"				"	"	"	"	"	3	"	"	"
		"	41					GND			"				"	"	"	"	"	4	"	"	"
		"	42						GND		"				"	"	"	"	"	5	"	"	"
		"	43							GND	"				"	"	"	"	"	6	"	"	"
		"	44								"	GND			"	"	"	"	"	7	"	"	"
		"	45								"		GND		"	"	"	"	"	8	"	"	"
		"	46								"			GND	"	"	"	"	"	9	"	"	"
	I_{CC}	3005	47								"				GND	GND	GND	GND	"	V_{CC}		41	mA
2	Same tests, terminal conditions and limits as for subgroup 1, except T_C = 125°C and V_{IC} tests are omitted.																						
3	Same tests, terminal conditions and limits as for subgroup 1, except T_C = -55°C and V_{IC} tests are omitted.																						

See notes at end of device type 02.

TABLE III. Group A inspection for device type 02 - Continued. 1/
Terminal conditions (pins not designated may be high ≥ 2.4 V or low ≤ 0.8 V or open).

Subgroup	Symbol	MIL-STD-883 method	Cases E Test no.	1	2	3	4	5	6	7	8	9	10	11	12	13	14	15	16	Measured terminal	Test limits Min	Test limits Max	Unit
				0	1	2	3	4	5	6	GND	7	8	9	D	C	B	A	V_{CC}				
7 T_C = 25°C	Truth table test		48	L	H	H	H	H	H	H	GND	H	H	H	GND	GND	5.0 V	5.0 V	5.0 V		See note 2/		
			49	H	L	H	"	"	"	"	"	"	"	"	"	5.0 V	GND	GND	"				
			50	"	H	L	"	"	"	"	"	"	"	"	"	"	GND	5.0 V	"				
			51	"	"	H	L	"	"	"	"	"	"	"	"	"	5.0 V	GND	"				
			52	"	"	"	H	L	"	"	"	"	"	"	"	"	5.0 V	5.0 V	"				
			53	"	"	"	"	H	L	"	"	"	"	"	5.0 V	GND	GND	GND	"				
			54	"	"	"	"	"	H	L	"	"	"	"	"	"	GND	5.0 V	"				
			55	"	"	"	"	"	"	H	"	L	"	"	"	"	5.0 V	GND	"				
			56	"	"	"	"	"	"	"	"	H	L	"	"	"	5.0 V	5.0 V	"				
			57	"	"	"	"	"	"	"	"	"	H	L	"	5.0 V	GND	GND	"				
			58	"	"	"	"	"	"	"	"	"	●	H	"	"	GND	5.0 V	"				
			59	"	"	"	"	"	"	"	"	"	"	"	"	"	5.0 V	GND	"				
			60	"	"	"	"	"	"	"	"	"	"	"	"	"	5.0 V	5.0 V	"				
			61	"	"	"	"	"	"	"	"	"	"	"	GND	GND	GND	GND	"				
			62	"	"	"	"	"	"	"	"	"	"	"	"	"	GND	5.0 V	"				
			63	"	"	"	"	"	"	"	"	"	"	"	"	"	5.0 V	GND	"				
8	Truth table test		64 thru 79	Same tests as subgroup 7, except T_C = 125°C.																			
	Truth table test		80 thru 95	Same tests as subgroup 7, except T_C = -55°C.																			
9 T_C = 25°C	t_{PHL} t_{PLH}	3003 (Fig. 6)	96 & 97		OUT						GND				GND	5.0 V	GND	IN	5.0 V	A to 1	5	32	ns
		"	98 & 99								"	OUT			5.0 V	GND	5.0 V	"	"	A to 7	"	"	"
		"	100 & 101								"			OUT	5.0 V	5.0 V	GND	"	"	A to 9	"	"	"
		"	102 & 103	OUT							"				GND	GND	5.0 V	"	"	A to 0	"	37	"
		"	104 & 105							OUT	"				5.0 V	GND	GND	"	"	A to 6	"	37	"
		"	106 & 107			OUT					"				GND	5.0 V	IN	5.0 V	"	B to 2	"	32	"
		"	108 & 109							OUT	"				5.0 V	GND	"	5.0 V	"	B to 6	"	32	"
		"	110 & 111								"			OUT	5.0 V	5.0 V	"	GND	"	B to 9	"	32	"
		"	112 & 113				OUT				"				GND	5.0 V	"	GND	"	B to 3	"	37	"
		"	114 & 115								"	OUT			5.0 V	GND	"	GND	"	B to 7	"	37	"
		"	116 & 117								"		OUT		5.0 V	GND	"	5.0 V	"	B to 8	"	37	"
		"	118 & 119	OUT							"				GND	IN	5.0 V	5.0 V	"	C to 0	"	32	"
		"	120 & 121						OUT		"				5.0 V	"	GND	GND	"	C to 5	"	32	"
		"	122 & 123								"		OUT		5.0 V	"	5.0 V	5.0 V	"	C to 8	"	32	"
		"	124 & 125		OUT						"				GND	"	GND	GND	"	C to 1	"	37	"
		"	126 & 127			OUT					"				GND	"	GND	5.0 V	"	C to 2	"	"	"
		"	128 & 129					OUT			"				GND	"	5.0 V	5.0 V	"	C to 4	"	"	"
		"	130 & 131								"			OUT	5.0 V	"	GND	GND	"	C to 9	"	"	"
		"	132 & 133				OUT				"				IN	5.0 V	5.0 V	GND	"	D to 3	"	32	"
		"	134 & 135					OUT			"				"	5.0 V	5.0 V	5.0 V	"	D to 4	"	32	"
		"	136 & 137						OUT		"				"	GND	GND	GND	"	D to 5	"	37	"
		"	138 & 139							OUT	"				"	"	"	5.0 V	"	D to 6	"	"	"
		"	140 & 141								"	OUT			"	"	5.0 V	GND	"	D to 7	"	"	"
		"	142 & 143								"		OUT		"	"	5.0 V	5.0 V	"	D to 8	"	"	"

See notes at end of device type 02.

TABLE III. Group A inspection for device type 02 - Continued. 1/
Terminal conditions (pins not designated may be high ≥ 2.4 V or low ≤ 0.8 V or open).

Subgroup	Symbol	MIL-STD-883 method	Cases E Test no.	1 / 0	2 / 1	3 / 2	4 / 3	5 / 4	6 / 5	7 / 6	8 / GND	9 / 7	10 / 8	11 / 9	12 / D	13 / C	14 / B	15 / A	16 / V_{CC}	Measured terminal	Test limits Min	Test limits Max	Unit
10 T_C = 125°C	t_{PHL} t_{PLH}	3003 (Fig. 6)	144 & 145		OUT						GND				GND	5.0 V	GND	IN	5.0 V	A to 1	5	39	ns
		"	146 & 147								"	OUT			5.0 V	GND	5.0 V	"	"	A to 7	"	39	"
		"	148 & 149								"			OUT	5.0 V	5.0 V	GND	"	"	A to 9	"	39	"
		"	150 & 151	OUT							"				GND	GND	5.0 V	"	"	A to 0	"	46	"
		"	152 & 153						OUT		"				5.0 V	GND	GND	"	"	A to 6	"	46	"
		"	154 & 155			OUT					"				GND	5.0 V	IN	5.0 V	"	B to 2	"	39	"
		"	156 & 157						OUT		"				5.0 V	GND	"	5.0 V	"	B to 6	"	39	"
		"	158 & 159								"			OUT	5.0 V	5.0 V	"	GND	"	B to 9	"	39	"
		"	160 & 161				OUT				"				GND	5.0 V	"	GND	"	B to 3	"	46	"
		"	162 & 163								"	OUT			5.0 V	GND	"	GND	"	B to 7	"	46	"
		"	164 & 165								"		OUT		5.0 V	GND	"	5.0 V	"	B to 8	"	46	"
		"	166 & 167	OUT							"				GND	IN	5.0 V	5.0 V	"	C to 0	"	39	"
		"	168 & 169					OUT			"				5.0 V	"	GND	GND	"	C to 5	"	39	"
		"	170 & 171								"		OUT		5.0 V	"	5.0 V	5.0 V	"	C to 8	"	39	"
		"	172 & 173		OUT						"				GND	"	GND	GND	"	C to 1	"	46	"
		"	174 & 175								"				GND	"	GND	5.0 V	"	C to 2	"	"	"
		"	176 & 177				OUT				"				GND	"	5.0 V	5.0 V	"	C to 4	"	"	"
		"	178 & 179								"			OUT	5.0 V	"	GND	GND	"	C to 9	"	"	"
		"	180 & 181			OUT					"				IN	5.0 V	5.0 V	GND	"	D to 3	"	34	"
		"	182 & 183				OUT				"				"	5.0 V	5.0 V	5.0 V	"	D to 4	"	34	"
		"	184 & 185					OUT			"				"	GND	GND	GND	"	D to 5	"	46	"
		"	186 & 187						OUT		"				"	"	"	5.0 V	"	D to 6	"	"	"
		"	188 & 189								"	OUT			"	"	5.0 V	GND	"	D to 7	"	"	"
		"	190 & 191								"		OUT		"	"	5.0 V	5.0 V	"	D to 8	"	"	"
11	Same tests, terminal conditions and limits as for subgroup 10 except T_C = -55°C.																						

1/ Qualification requirements are removed for this device type.

2/ Output voltages shall be either:
(a) H = 2.4 volts minimum and L = 0.4 volts maximum when using a high speed checker double comparator,
or
(b) H ≥ 1.5 volts and L ≤ 1.5 volts when using a high speed checker single comparator.

TABLE III. Group A inspection for device type 03. 1/
Terminal conditions (pins not designated may be high ≥ 2.4 V or low ≤ 0.8 V or open).

Subgroup	Symbol	MIL-STD-883 method	Cases E and F Test no.	1	2	3	4	5	6	7	8	9	10	11	12	13	14	15	16	Measured terminal	Test limits Min	Test limits Max	Unit
				0	1	2	3	4	5	6	GND	7	8	9	D	C	B	A	V_{CC}				
1 $T_C = 25°C$	V_{OH}	3006	1	-.8 mA							GND				0.8 V	0.8 V	0.8 V	0.8 V	4.5 V	0	2.4		V
		"	2		-.8 mA						"				"	"	"	"	"	1	"		"
		"	3			-.8 mA					"				"	"	"	"	"	2	"		"
		"	4				-.8 mA				"				"	"	"	"	"	3	"		"
		"	5					-.8 mA			"				"	"	"	"	"	4	"		"
		"	6						-.8 mA		"				"	"	"	"	"	5	"		"
		"	7							-.8 mA	"				"	"	"	"	"	6	"		"
		"	8								"	-.8 mA			"	"	"	"	"	7	"		"
		"	9								"		-.8 mA		"	"	"	"	"	8	"		"
		"	10								"			-.8 mA	"	"	"	"	"	9	"		"
	V_{OL}	3007	11	16 mA							"				0.8 V	0.8 V	2.0 V	0.8 V	"	0		0.4	V
		"	12		16 mA						"				"	2.0 V	"	0.8 V	"	1		"	"
		"	13			16 mA					"				"	"	"	2.0 V	"	2		"	"
		"	14				16 mA				"				"	"	0.8 V	2.0 V	"	3		"	"
		"	15					16 mA			"				"	"	"	0.8 V	"	4		"	"
		"	16						16 mA		"				2.0 V	"	"	0.8 V	"	5		"	"
		"	17							16 mA	"				"	"	"	2.0 V	"	6		"	"
		"	18								"	16 mA			"	"	2.0 V	2.0 V	"	7		"	"
		"	19								"		16 mA		"	"	"	0.8 V	"	8		"	"
		"	20								"			16 mA	"	0.8 V	"	0.8 V	"	9		"	"
	V_{IC}		21								"							-12 mA	"	A		-1.5	V
			22								"						-12 mA		"	B		"	"
			23								"					-12 mA			"	C		"	"
			24								"				-12 mA				"	D		"	"
	I_{IH1}	3010	25								"				GND	GND	GND	2.4 V	5.5 V	A		40	μA
		"	26								"				"	GND	2.4 V	GND	"	B		"	"
		"	27								"				"	2.4 V	GND	"	"	C		"	"
		"	28								"				2.4 V	GND	"	"	"	D		"	"
	I_{IH2}	3010	29								"				GND	"	"	5.5 V	"	A		100	μA
		"	30								"				"	"	5.5 V	GND	"	B		"	"
		"	31								"				"	5.5 V	GND	"	"	C		"	"
		"	32								"				5.5 V	GND	GND	"	"	D		"	"
	I_{IL}	3009	33								"				"	5.5 V	5.5 V	0.4 V	"	A	-.7	-1.6	mA
		"	34								"				"	5.5 V	0.4 V	5.5 V	"	B	"	"	"
		"	35								"				"	0.4 V	5.5 V	"	"	C	"	"	"
		"	36								"				0.4 V	5.5 V	5.5 V	"	"	D	"	"	"
	I_{OS}	3011	37	GND							"				GND	GND	GND	GND	GND	0	-20	-55	mA
		"	38		GND						"				"	"	"	"	"	1	"	"	"
		"	39			GND					"				"	"	"	"	"	2	"	"	"
		"	40				GND				"				"	"	"	"	"	3	"	"	"
		"	41					GND			"				"	"	"	"	"	4	"	"	"
		"	42						GND		"				"	"	"	"	"	5	"	"	"
		"	43							GND	"				"	"	"	"	"	6	"	"	"
		"	44								"	GND			"	"	"	"	"	7	"	"	"
		"	45								"		GND		"	"	"	"	"	8	"	"	"
		"	46								"			GND	"	"	"	"	"	9	"	"	"
	I_{CC}	3005	47								"				GND	GND	GND	GND	"	V_{CC}		41	mA
2	Same tests, terminal conditions and limits as for subgroup 1, except $T_C = 125°C$ and V_{IC} tests are omitted.																						
3	Same tests, terminal conditions and limits as for subgroup 1, except $T_C = -55°C$ and V_{IC} tests are omitted.																						

See notes at end of device type 03.

TABLE III. Group A inspection for device type 03 - Continued. 1/
Terminal conditions (pins not designated may be high ≥ 2.4 V or low ≤ 0.8 V or open).

Subgroup	Symbol	MIL-STD-883 method	Cases E and F Test no.	1	2	3	4	5	6	7	8	9	10	11	12	13	14	15	16	Measured terminal	Test limits Min	Test limits Max	Unit
				0	1	2	3	4	5	6	GND	7	8	9	D	C	B	A	V_{CC}				
7 T_C = 25°C	Truth table test		48	L	H	H	H	H	H	H	GND	H	H	H	GND	GND	5.0 V	GND	5.0 V				
			49	H	L	H	"	"	"	"	"	"	"	"	"	5.0 V	5.0 V	GND	"				
			50	"	H	L	"	"	"	"	"	"	"	"	"	"	5.0 V	5.0 V	"				
			51	"	"	H	L	"	"	"	"	"	"	"	"	"	GND	5.0 V	"				
			52	"	"	"	H	L	"	"	"	"	"	"	"	"	"	GND	"				
			53	"	"	"	"	H	L	"	"	"	"	"	5.0 V	"	"	GND	"				
			54	"	"	"	"	"	H	L	"	"	"	"	"	"	"	5.0 V	"				
			55	"	"	"	"	"	"	H	"	L	"	"	"	"	5.0 V	5.0 V	"				
			56	"	"	"	"	"	"	"	"	H	L	"	"	"	"	GND	"				
			57	"	"	"	"	"	"	"	"	"	H	L	"	GND	"	GND	"		See note 2/		
			58	"	"	"	"	"	"	"	"	"	"	H	"	"	"	5.0 V	"				
			59	"	"	"	"	"	"	"	"	"	"	"	"	"	GND	5.0 V	"				
			60	"	"	"	"	"	"	"	"	"	"	"	"	"	"	GND	"				
			61	"	"	"	"	"	"	"	"	"	"	"	GND	"	"	GND	"				
			62	"	"	"	"	"	"	"	"	"	"	"	"	"	"	5.0 V	"				
			63	"	"	"	"	"	"	"	"	"	"	"	"	"	5.0 V	5.0 V	"				
8	Truth table test		64 thru 79	Same tests as subgroup 7, except T_C = 125°C.																			
	Truth table test		80 thru 95	Same tests as subgroup 7, except T_C = -55°C.																			
9 T_C = 25°C	t_{PHL} t_{PLH}	3003 (Fig. 6)	96 & 97	OUT							GND				GND	GND	5.0 V	IN	5.0 V	A to 0	5	32	ns
			98 & 99								"		OUT		5.0 V	5.0 V	5.0 V	IN	"	A to 8	"	32	"
			100 & 101			OUT					"				GND	"	5.0 V	IN	"	A to 2	"	37	"
			102 & 103				OUT				"				GND	"	IN	5.0 V	"	B to 3	"	32	"
			104 & 105					OUT			"				GND	"	"	GND	"	B to 4	"	"	"
			106 & 107						OUT		"				5.0 V	"	"	GND	"	B to 5	"	"	"
			108 & 109							OUT	"				5.0 V	"	"	5.0 V	"	B to 6	"	"	"
			110 & 111	OUT							"				GND	GND	"	GND	"	B to 0	"	37	"
			112 & 113		OUT						"				GND	5.0 V	"	GND	"	B to 1	"	"	"
			114 & 115			OUT					"				GND	5.0 V	"	5.0 V	"	B to 2	"	"	"
			116 & 117								"		OUT		5.0 V	5.0 V	"	GND	"	B to 8	"	"	"
			118 & 119								"			OUT	5.0 V	IN	5.0 V	GND	"	C to 9	"	32	"
			120 & 121		OUT						"				GND	"	5.0 V	GND	"	C to 1	"	37	"
			122 & 123				OUT				"				GND	"	GND	5.0 V	"	C to 3	"	"	"
			124 & 125					OUT			"				GND	"	"	GND	"	C to 4	"	"	"
			126 & 127						OUT		"				5.0 V	"	"	GND	"	C to 5	"	"	"
			128 & 129							OUT	"				5.0 V	"	"	5.0 V	"	C to 6	"	"	"
			130 & 131								"	OUT			5.0 V	"	5.0 V	5.0 V	"	C to 7	"	"	"
			132 & 133		OUT						"				IN	5.0 V	5.0 V	GND	"	D to 1	"	32	"
			134 & 135			OUT					"				"	"	5.0 V	5.0 V	"	D to 2	"	32	"
			136 & 137					OUT			"				"	"	GND	5.0 V	"	D to 4	"	32	"
			138 & 139						OUT		"				"	"	GND	GND	"	D to 5	"	37	"
			140 & 141							OUT	"				"	"	GND	5.0 V	"	D to 6	"	"	"
			142 & 143								"	OUT			"	"	5.0 V	5.0 V	"	D to 7	"	"	"
			144 & 145								"			OUT	"	GND	5.0 V	GND	"	D to 9	"	"	"

See notes at end of device type 03.

TABLE III. Group A inspection for device type 03 - Continued. 1/
Terminal conditions (pins not designated may be high ≥ 2.4 V or low ≤ 0.8 V or open).

Subgroup	Symbol	MIL-STD-883 method	Cases E,F Test no.	1	2	3	4	5	6	7	8	9	10	11	12	13	14	15	16	Measured terminal	Test limits Min	Test limits Max	Unit
				0	1	2	3	4	5	6	GND	7	8	9	D	C	B	A	V_{CC}				
10 T_C = 125°C	t_{PHL} t_{PLH}	3003 (Fig. 6)	146 & 147	OUT							GND				GND	GND	5.0 V	IN	5.0 V	A to 0	5	39	ns
			148 &149								"		OUT		5.0 V	5.0 V	5.0 V	IN	"	A to 8	"	39	"
			150 & 151			OUT					"				GND	"	5.0 V	IN	"	A to 2	"	46	"
			152 & 153				OUT				"				GND	"	IN	5.0 V	"	B to 3	"	39	"
			154 & 155					OUT			"				GND	"	"	GND	"	B to 4	"	"	"
			156 & 157						OUT		"				5.0 V	"	"	GND	"	B to 5	"	"	"
			158 & 159							OUT	"				5.0 V	"	"	5.0 V	"	B to 6	"	"	"
			160 & 161	OUT							"				GND	GND	"	GND	"	B to 0	"	46	"
			162 & 163		OUT						"				GND	5.0 V	"	GND	"	B to 1	"	"	"
			164 & 165			OUT					"				GND	5.0 V	"	5.0 V	"	B to 2	"	"	"
			166 & 167								"		OUT		5.0 V	5.0 V	"	GND	"	B to 8	"	"	"
			168 & 169								"			OUT	5.0 V	IN	5.0 V	GND	"	C to 9	"	39	"
			170 & 171		OUT						"				GND	"	5.0 V	GND	"	C to 1	"	46	"
			172 & 173				OUT				"				GND	"	GND	5.0 V	"	C to 3	"	"	"
			174 & 175					OUT			"				GND	"	"	GND	"	C to 4	"	"	"
			176 & 177						OUT		"				5.0 V	"	"	GND	"	C to 5	"	"	"
			178 & 179							OUT	"				5.0 V	"	"	5.0 V	"	C to 6	"	"	"
			180 & 181								"	OUT			5.0 V	"	5.0 V	5.0 V	"	C to 7	"	"	"
			182 & 183		OUT						"				IN	5.0 V	5.0 V	GND	"	D to 1	"	39	"
			184 & 185			OUT					"				"	"	5.0 V	5.0 V	"	D to 2	"	39	"
			186 & 187					OUT			"				"	"	GND	5.0 V	"	D to 4	"	39	"
			188 & 189						OUT		"				"	"	GND	GND	"	D to 5	"	46	"
			190 & 191							OUT	"				"	"	GND	5.0 V	"	D to 6	"	"	"
			192 & 193								"	OUT			"	"	5.0 V	5.0 V	"	D to 7	"	"	"
			194 & 195								"			OUT	"	GND	5.0 V	GND	"	D to 9	"	"	"
11	Same tests, terminal conditions and limits as for subgroup 10 except T_C = -55°C.																						

1/ Qualification requirement are removed for this device type.

2/ Output voltage shall be either:
(a) H = 2.4 volts minimum and L = 0.4 volts maximum when using a high speed checker double comparator, or
(b) H ≥ 1.5 volts and L ≤ 1.5 volts when using a high speed checker single comparator.

TABLE III. Group A inspection for device types 04 and 05.
Terminal conditions (pins not designated may be high ≥ 2.4 V or low ≤ 0.8 V or open).

Subgroup	Symbol	MIL-STD-883 method	Cases E,F Test no.	1	2	3	4	5	6	7	8	9	10	11	12	13	14	15	16	Measured terminal	Test limits Min	Test limits Max	Unit
				0	1	2	3	4	5	6	GND	7	8	9	D	C	B	A	V_{CC}				
1 $T_C = 25°C$	V_{OL}	3007	1	80 mA							GND				0.8 V	0.8 V	0.8 V	0.8 V	4.5 V	0		0.9	V
		"	2		80 mA						"				"	"	0.8 V	2.0 V	"	1		"	"
		"	3			80 mA					"				"	"	2.0 V	0.8 V	"	2		"	"
		"	4				80 mA				"				"	"	2.0 V	2.0 V	"	3		"	"
		"	5					80 mA			"				"	2.0 V	0.8 V	0.8 V	"	4		"	"
		"	6						80 mA		"				"	"	0.8 V	2.0 V	"	5		"	"
		"	7							80 mA	"				"	"	2.0 V	0.8 V	"	6		"	"
		"	8								"	80 mA			"	"	2.0 V	2.0 V	"	7		"	"
		"	9								"		80 mA		2.0 V	0.8 V	0.8 V	0.8 V	"	8		"	"
		"	10								"			80 mA	2.0 V	0.8 V	0.8 V	2.0 v	"	9		"	"
	V_{OL2}	3007	11	20 mA							"				0.8 V	0.8 V	0.8 V	0.8 V	"	0		0.4	"
		"	12		20 mA						"				"	"	0.8 V	2.0 V	"	1		"	"
		"	13			20 mA					"				"	"	2.0 V	0.8 V	"	2		"	"
		"	14				20 mA				"				"	"	2.0 V	2.0 V	"	3		"	"
		"	15					20 mA			"				"	2.0 V	0.8 V	0.8 V	"	4		"	"
		"	16						20 mA		"				"	"	0.8 V	2.0 V	"	5		"	"
		"	17							20 mA	"				"	"	2.0 V	0.8 V	"	6		"	"
		"	18								"	20 mA			"	"	2.0 V	2.0 V	"	7		"	"
		"	19								"		20 mA		2.0 V	0.8 V	0.8 V	0.8 V	"	8		"	"
		"	20								"			20 mA	2.0 V	0.8 V	0.8 V	2.0 v	"	9		"	"
	I_{CEX} (See note 1)		21	Y							"				2.0 V	2.0 V	2.0 V	2.0 V	"	0		250	μA
			22		Y						"				"	"	"	"	"	1		"	"
			23			Y					"				"	"	"	"	"	2		"	"
			24				Y				"				"	"	"	"	"	3		"	"
			25					Y			"				"	"	"	"	"	4		"	"
			26						Y		"				"	"	"	"	"	5		"	"
			27							Y	"				"	"	"	"	"	6		"	"
			28								"	Y			"	"	"	"	"	7		"	"
			29								"		Y		"	"	"	"	"	8		"	"
			30								"			Y	"	"	"	"	"	9		"	"
	V_{IC}		31								"							-12 mA	"	A		-1.5	V
			32								"						-12 mA		"	B		"	"
			33								"					-12 mA			"	C		"	"
			34								"				-12 mA				"	D		"	"
	I_{IL}	3009	35								"				5.5 V	5.5 V	5.5 V	0.4 V	5.5 V	A	-7	-1.6	mA
		"	36								"				"	5.5 V	0.4 V	5.5 V	"	B	"	"	"
		"	37								"				"	0.4 V	5.5 V	"	"	C	"	"	"
		"	38								"				0.4 V	5.5 V	5.5 V	"	"	D	"	"	"
	I_{IH1}	3010	39								"				GND	GND	GND	2.4 V	"	A		40	μA
		"	40								"				"	GND	2.4 V	GND	"	B		"	"
		"	41								"				"	2.4 V	GND	"	"	C		"	"
		"	42								"				2.4 V	GND	GND	"	"	D		"	"
	I_{IH2}	3010	43								"				GND	"	"	5.5 V	"	A		100	μA
		"	44								"				"	"	5.5 V	GND	"	B		"	"
		"	45								"				"	5.5 V	GND	"	"	C		"	"
		"	46								"				5.5 V	GND	GND	"	"	D		"	"
	I_{CC}	3005	47								"				GND	GND	GND	GND	"	V_{CC}		62	mA
2	Same tests, terminal conditions and limits as for subgroup 1, except $T_C = 125°C$ and V_{IC} tests are omitted.																						
3	Same tests, terminal conditions and limits as for subgroup 1, except $T_C = -55°C$ and V_{IC} tests are omitted.																						

See notes at end of device types 04 and 05.

TABLE III. Group A inspection for device types 04 and 05 - Continued.
Terminal conditions (pins not designated may be high ≥ 2.4 V or low ≤ 0.8 V or open).

Subgroup	Symbol	MIL-STD-883 method	Cases E,F Test no.	1	2	3	4	5	6	7	8	9	10	11	12	13	14	15	16	Measured terminal	Test limits Min	Test limits Max	Unit
				0	1	2	3	4	5	6	GND	7	8	9	D	C	B	A	V_{CC}				
7 T_C = 25°C	Truth table test		48	L	H	H	H	H	H	H	GND	H	H	H	GND	GND	GND	GND	5.0 V				
			49	H	L	H	"	"	"	"	"	"	"	"	"	"	GND	5.0 V	"				
			50	"	H	L	"	"	"	"	"	"	"	"	"	"	5.0 V	GND	"				
			51	"	"	H	L	"	"	"	"	"	"	"	"	"	5.0 V	5.0 V	"				
			52	"	"	"	H	L	"	"	"	"	"	"	"	5.0 V	GND	GND	"				
			53	"	"	"	"	H	L	"	"	"	"	"	"	"	GND	5.0 V	"				
			54	"	"	"	"	"	H	L	"	"	"	"	"	"	5.0 V	GND	"				
			55	"	"	"	"	"	"	H	"	L	"	"	"	"	5.0 V	5.0 V	"				
			56	"	"	"	"	"	"	"	"	H	L	"	5.0 V	GND	GND	GND	"		See		
			57	"	"	"	"	"	"	"	"	"	H	L	"	"	GND	5.0 V	"		note		
			58	"	"	"	"	"	"	"	"	"	"	H	"	"	5.0 V	GND	"		2/		
			59	"	"	"	"	"	"	"	"	"	"	"	"	"	5.0 V	5.0 V	"				
			60	"	"	"	"	"	"	"	"	"	"	"	"	5.0 V	GND	GND	"				
			61	"	"	"	"	"	"	"	"	"	"	"	"	"	GND	5.0 V	"				
			62	"	"	"	"	"	"	"	"	"	"	"	"	"	5.0 V	GND	"				
			63	"	"	"	"	"	"	"	"	"	"	"	"	"	5.0 V	5.0 V	"				
8 T_C = 25°C	Truth table test		64 thru 79	Same tests as subgroup 7, except T_C = 125°C.																			
	Truth table test		80 thru 95	Same tests as subgroup 7, except T_C = -55°C.																			
9 T_C = 25°C	t_{PHL} t_{PLH}	3003 (Fig. 7)	96 & 97	OUT							GND				GND	GND	GND	IN	5.0 V	A to 0	5	56	ns
		"	98 & 99		OUT						"				GND	GND	"	"	"	A to 1	"	"	"
		"	100 & 101								"				GND	5.0 V	"	"	"	A to 5	"	"	"
		"	102 & 103						OUT		"		OUT		5.0 V	GND	"	"	"	A to 8	"	"	"
		"	104 & 105		OUT						"				GND	GND	IN	5.0 V	"	B to 1	"	"	"
		"	106 & 107			OUT					"				GND	GND	IN	GND	"	B to 2	"	"	"
		"	108 & 109							OUT	"				GND	5.0 V	IN	GND	"	B to 6	"	"	"
		"	110 & 111			OUT					"				GND	IN	5.0 V	GND	"	C to 2	"	"	"
		"	112 & 113				OUT				"				"	"	5.0 V	5.0 V	"	C to 3	"	"	"
		"	114 & 115					OUT			"				"	"	GND	GND	"	C to 4	"	"	"
		"	116 & 117						OUT		"				"	"	GND	5.0 V	"	C to 5	"	"	"
		"	118 & 119							OUT	"				"	"	5.0 V	GND	"	C to 6	"	"	"
		"	120 & 121								"	OUT			"	"	5.0 V	5.0 V	"	C to 7	"	"	"
		"	122 & 123								"		OUT		5.0 V	"	GND	GND	"	C to 8	"	"	"
		"	124 & 125								"			OUT	5.0 V	"	GND	5.0 V	"	C to 9	"	"	"
		"	126 & 127				OUT				"				IN	GND	5.0 V	5.0 V	"	D to 3	"	"	"
		"	128 & 129					OUT			"				"	5.0 V	GND	GND	"	D to 4	"	"	"
		"	130 & 131						OUT		"				"	"	GND	5.0 V	"	D to 5	"	"	"
		"	132 & 133							OUT	"				"	"	5.0 V	GND	"	D to 6	"	"	"
		"	134 & 135								"	OUT			"	"	5.0 V	5.0 V	"	D to 7	"	"	"
		"	136 & 137								"		OUT		"	GND	GND	GND	"	D to 8	"	"	"
		"	138 & 139								"			OUT	"	GND	GND	5.0 V	"	D to 9	"	"	"

See notes at end of device types 04 and 05.

TABLE III. Group A inspection for device types 04 and 05 - Continued.
Terminal conditions (pins not designated may be high ≥ 2.4 V or low ≤ 0.8 V or open).

Subgroup	Symbol	MIL-STD-883 method	Cases E,F Test no.	1	2	3	4	5	6	7	8	9	10	11	12	13	14	15	16	Measured terminal	Test limits Min	Test limits Max	Unit
				0	1	2	3	4	5	6	GND	7	8	9	D	C	B	A	V_{CC}				
10 T_C = 125°C	t_{PHL} t_{PLH}	3003 (Fig. 7)	140 & 141	OUT							GND				GND	GND	GND	IN	5.0 V	A to 0	5	73	ns
		"	142 & 143		OUT						"				GND	GND	"	"	"	A to 1	"	"	"
		"	144 & 145								"				GND	5.0 V	"	"	"	A to 5	"	"	"
		"	146 & 147						OUT		"		OUT		5.0 V	GND	"	"	"	A to 8	"	"	"
		"	148 & 149		OUT						"				GND	GND	IN	5.0 V	"	B to 1	"	"	"
		"	150 & 151			OUT					"				GND	GND	IN	GND	"	B to 2	"	"	"
		"	152 & 153							OUT	"				GND	5.0 V	IN	GND	"	B to 6	"	"	"
		"	154 & 155			OUT					"				GND	IN	5.0 V	GND	"	C to 2	"	"	"
		"	156 & 157				OUT				"				"	"	5.0 V	5.0 V	"	C to 3	"	"	"
		"	158 & 159					OUT			"				"	"	GND	GND	"	C to 4	"	"	"
		"	160 & 161						OUT		"				"	"	GND	5.0 V	"	C to 5	"	"	"
		"	162 & 163							OUT	"				"	"	5.0 V	GND	"	C to 6	"	"	"
		"	164 & 165								"	OUT			"	"	5.0 V	5.0 V	"	C to 7	"	"	"
		"	166 & 167								"		OUT		5.0 V	"	GND	GND	"	C to 8	"	"	"
		"	168 & 169								"			OUT	5.0 V	"	GND	5.0 V	"	C to 9	"	"	"
		"	170 & 171				OUT				"				IN	GND	5.0 V	5.0 V	"	D to 3	"	"	"
		"	172 & 173					OUT			"				"	5.0 V	GND	GND	"	D to 4	"	"	"
		"	174 & 175						OUT		"				"	"	GND	5.0 V	"	D to 5	"	"	"
		"	176 & 177							OUT	"				"	"	5.0 V	GND	"	D to 6	"	"	"
		"	178 & 179								"	OUT			"	"	5.0 V	5.0 V	"	D to 7	"	"	"
		"	180 & 181								"		OUT		"	GND	GND	GND	"	D to 8	"	"	"
		"	182 & 183								"			OUT	"	GND	GND	5.0 V	"	D to 9	"	"	"
11	Same tests, terminal conditions and limits as for subgroup 10, except T_C = -55°C.																						

NOTES:

1/ Y = 30 volts for device type 04 and 15 volts for device type 05.

2/ Output voltages shall be either:
(a) H = 2.4 volts minimum and L = 0.4 volts minimum when using a high speed checker double comparator, or
(b) H ≥ 1.5 volts and L ≤ 1.5 volts when using a high speed checker single comparator.

TABLE III. Group A inspection for device types 06 and 07.
Terminal conditions (pins not designated may be high ≥ 2.4 V or low ≤ 0.8 V or open).

Subgroup	Symbol	MIL-STD-883 method	Cases E,F Test no.	1 B	2 C	3 LT	4 RBO	5 RBI	6 D	7 A	8 GND	9 e	10 d	11 c	12 b	13 a	14 g	15 f	16 V_{CC}	Measured terminal	Test limits Min	Test limits Max	Unit
1 T_C = 25°C	V_{OL1} (See note 1)	3007	1	X	X	0.8 V		X	X	X	GND	40 mA							4.5 V	e		0.4	V
	"	"	2	"	"	"		"	"	"	"		40 mA						"	d		"	"
	"	"	3	"	"	"		"	"	"	"			40 mA					"	c		"	"
	"	"	4	"	"	"		"	"	"	"				40 mA				"	b		"	"
	"	"	5	"	"	"		"	"	"	"					40 mA			"	a		"	"
	"	"	6	"	"	"		"	"	"	"						40 mA		"	g		"	"
	"	"	7	"	"	"		"	"	"	"							40 mA	"	f		"	"
	V_{OL2}	3007	8	0.8 V	0.8 V	2.0 V	8 mA	0.8 V	0.8 V	0.8 V	"								"	RBO		0.4	V
	I_{CEX} (See note 2)		9	"	"	"		"	"	"	"	Y							"	e		250	μA
			10	"	"	"		"	"	"	"		Y						"	d		"	"
			11	"	"	"		"	"	"	"			Y					"	c		"	"
			12	"	"	"		"	"	"	"				Y				"	b		"	"
			13	"	"	"		"	"	"	"					Y			"	a		"	"
			14	"	"	"		"	"	"	"						Y		"	g		"	"
			15	"	"	"		"	"	"	"							Y	"	f		"	"
	V_{OH}	3006	16	0.8 V	0.8 V	2.0 V	-.2 mA	2.0 V	0.8 V	0.8 V	"								"	RBO	2.4		V
	V_{IC}		17	-12 mA							"								"	B		-1.5	V
			18		-12 mA						"								"	C		"	"
			19				-12 mA				"								"	RBO		"	"
			20					-12 mA			"								"	RBI		"	"
			21						-12 mA		"								"	D		"	"
			22							-12 mA	"								"	A		"	"
	I_{IL1}	3009	23(See note 4)	0.4 V	5.5 V	5.5 V		5.5 V	5.5 V	5.5 V	"								5.5 V	B	-.7	-1.6	mA
	"	"	23 CKT C	0.4 V	5.5 V	5.5 V		"	"	"	"								"	B	-.4	-1.3	"
	"	"	24(See note 4)	5.5 V	0.4 V	5.5 V		"	"	"	"								"	C	-.7	-1.6	"
	"	"	24 CKT C	5.5 V	0.4 V	5.5 V		"	"	"	"								"	C	-.4	-1.3	"
	"	"	25(See note 4)	"	5.5 V	0.4 V		"	"	"	"								"	LT	-.7	-1.6	"
	"	"	25 CKT C	"	5.5 V	0.4 V		"	"	"	"								"	LT	-.4	-1.3	"
	"	"	26(See note 4)	"	"	5.5 V		0.4 V	"	"	"								"	RBI	-.7	-1.6	"
	"	"	26 CKT C	"	"	5.5 V		0.4 V	"	"	"								"	RBI	-.4	-1.3	"
	"	"	27(See note 4)	"	"	"		5.5 V	0.4 V	"	"								"	D	-.7	-1.6	"
	"	"	27 CKT C	"	"	"		"	0.4 V	"	"								"	D	-.4	-1.3	"
	"	"	28(See note 4)	"	"	"		"	5.5 V	0.4 V	"								"	A	-.7	-1.6	"
	"	"	28 CKT C	"	"	"		"	5.5 V	0.4 V	"								"	A	-.4	-1.3	"
	I_{IL2}	3009	29	"	"	"	0.4 V	5.5 V	5.5 V	5.5 V	"								"	RBO	-1.7	-4.2	mA
	I_{IH1}	3010	30	2.4 V	GND	GND		GND	GND	GND	"								"	B		40	μA
	"	"	31	GND	2.4 V	GND		GND	"	"	"								"	C		"	"
	"	"	32	"	GND	2.4 V		GND	"	"	"								"	LT		"	"
	"	"	33	"	"	GND		2.4 V	"	"	"								"	RBI		"	"
	"	"	34	"	"	GND		GND	2.4 V	"	"								"	D		"	"
	"	"	35	"	"	GND		GND	GND	2.4 V	"								"	A		"	"
	I_{IH2}	3010	36	5.5 V	GND	GND		GND	GND	GND	"								"	B		100	μA
	"	"	37	GND	5.5 V	GND		GND	"	"	"								"	C		"	"
	"	"	38	"	GND	5.5 V		GND	"	"	"								"	LT		"	"
	"	"	39	"	"	GND		5.5 V	"	"	"								"	RBI		"	"
	"	"	40	"	"	"		GND	5.5 V	"	"								"	D		"	"
	"	"	41	"	"	"		GND	GND	5.5 V	"								"	A		"	"
	I_{OS}	3011	42	"	"	"	GND	GND	GND	GND	"								"	RBO		-4	mA
	I_{CC}	3005	43	5.5 V	5.5 V	5.5 V	5.5 V	5.5 V	5.5 V	5.5 V	"								"	V_{CC}		85	mA
2	Same tests, terminal conditions and limits as for subgroup 1, except T_C = 125°C and V_{IC} tests are omitted.																						
3	Same tests, terminal conditions and limits as for subgroup 1, except T_C = -55°C and V_{IC} tests are omitted.																						

See notes at the end of device types 06 and 07.

TABLE III. Group A inspection for device types 06 and 07 - Continued
Terminal conditions (pins not designated may be high ≥ 2.4 V or low ≤ 0.8 V or open).

Subgroup	Symbol	MIL-STD-883 method	Cases E,F Test no.	1 B	2 C	3 LT	4 RBO	5 RBI	6 D	7 A	8 GND	9 e	10 d	11 c	12 b	13 a	14 g	15 f	16 V_{CC}	Measured terminal	Test limits Min	Test limits Max	Unit
7 T_C = 25°C	Truth table test		44	GND	GND	5.0 V		5.0 V	GND	GND	GND	L	L	L	L	L	H	L	5.0 V				
			45	GND	"	"		X	"	5.0 V	"	H	H	L	"	H	H	H	"				
			46	5.0 V	"	"		"	"	GND	"	L	L	H	"	L	L	H	"				
			47	5.0 V	"	"		"	"	5.0 V	"	H	L	L	"	L	"	H	"				
			48	GND	5.0 V	"		"	"	GND	"	H	H	"	"	H	"	L	"				
			49	GND	"	"		"	"	5.0 V	"	H	L	"	H	L	"	L	"				
			50	5.0 V	"	"		"	"	GND	"	L	L	"	H	H	"	L	"				
			51	5.0 V	"	"		"	"	5.0 V	"	H	H	"	L	L	H	H	"				
			52	GND	GND	"		"	5.0 V	GND	"	L	L	"	L	L	L	L	"				
			53	GND	"	"		"	"	5.0 V	"	H	H	"	L	L	"	L	"		SEE NOTE 3		
			54	5.0 V	"	"		"	"	GND	"	L	L	H	H	H	"	H	"				
			55	5.0 V	"	"		"	"	5.0 V	"	H	L	L	H	H	"	H	"				
			56	GND	5.0 V	"		"	"	GND	"	H	H	H	L	H	"	L	"				
			57	GND	"	"		"	"	5.0 V	"	H	L	"	H	L	"	L	"				
			58	5.0 V	"	"		"	"	GND	"	L	L	"	"	H	"	L	"				
			59	5.0 V	"	"		"	"	5.0 V	"	H	H	"	"	"	H	H	"				
			60	X	X	X	GND	X	X	X	"	H	H	"	"	"	H	H	"				
			61	GND	GND	5.0 V	L	GND	GND	GND	"	H	H	"	"	"	H	H	"				
			62	X	X	GND		X	X	X	"	L	L	L	L	L	L	L	"				
8	Truth table test		63 - 81	Same tests as subgroup 7, except T_C = 125°C.																			
			82 - 100	Same tests as subgroup 7, except T_C = -55°C.																			
9 T_C = 25°C	t_{PHL} t_{PLH}	3003 (Fig.8)	101 & 102	GND	GND	5.0 V		5.0 V	GND	IN	GND					OUT			5.0 V	A to a	8	104	ns
			103 & 104	GND	5.0 V	"		"	5.0 V	"	"					OUT			"	A to a	"	"	"
			105 & 106	5.0 V	"	"		"	GND	"	"					OUT			"	A to a	"	"	"
			107 & 108	GND	"	"		"	"	"	"				OUT				"	A to b	"	"	"
			109 & 110	5.0 V	"	"		"	"	"	"				OUT				"	A to b	"	"	"
			111 & 112	5.0 V	GND	"		"	"	"	"			OUT					"	A to c	"	"	"
			113 & 114	GND	GND	"		"	"	"	"		OUT						"	A to d	"	"	"
			115 & 116	GND	5.0 V	"		"	"	"	"		OUT						"	A to d	"	"	"
			117 & 118	5.0 V	5.0 V	"		"	"	"	"		OUT						"	A to d	"	"	"
			119 & 120	GND	GND	"		"	"	"	"	OUT							"	A to e	"	"	"
			121 & 122	5.0 V	GND	"		"	"	"	"	OUT							"	A to e	"	"	"
			123 & 124	GND	GND	"		"	"	"	"							OUT	"	A to f	"	"	"
			125 & 126	5.0 V	5.0 V	"		"	5.0 V	"	"							OUT	"	A to f	"	"	"
			127 & 128	5.0 V	5.0 V	"		"	5.0 V	"	"						OUT		"	A to g	"	"	"
			129 & 130	GND	GND	"	OUT	GND	GND	"	"								"	A to RBO	"	"	"
			131 & 132	IN	GND	"		5.0 V	5.0 V	GND	"					OUT			"	B to a	"	"	"
			133 & 134	"	GND	"		"	GND	5.0 V	"					OUT			"	B to a	"	"	"
			135 & 136	"	5.0 V	"		"	GND	GND	"				OUT				"	B to b	"	"	"
			137 & 138	"	GND	"		"	5.0 V	GND	"				OUT				"	B to b	"	"	"
			139 & 140	"	5.0 V	"		"	GND	5.0 V	"				OUT				"	B to b	"	"	"
			141 & 142	"	GND	"		"	5.0 V	5.0 V	"				OUT				"	B to b	"	"	"
			143 & 144	"	GND	"		"	GND	GND	"			OUT					"	B to c	"	"	"
			145 & 146	"	GND	"		"	"	5.0 V	"		OUT						"	B to d	"	"	"
			147 & 148	"	5.0 V	"		"	"	GND	"		OUT						"	B to d	"	"	"
			149 & 150	"	5.0 V	"		"	"	GND	"	OUT							"	B to e	"	"	"
			151 & 152	"	5.0 V	"		"	"	5.0 V	"							OUT	"	B to f	"	"	"
			153 & 154	"	GND	"		"	"	GND	"							OUT	"	B to f	"	"	"
			155 & 156	"	GND	"		"	5.0 V	"	"							OUT	"	B to f	"	"	"
			157 & 158	"	GND	"		"	GND	"	"						OUT		"	B to g	"	"	"
			159 & 160	GND	IN	"		"	5.0 V	"	"					OUT			"	C to a	"	"	"
			161 & 162	5.0 V	"	"		"	GND	"	"			OUT					"	C to c	"	"	"
			163 & 164	GND	"	"		"	5.0 V	5.0 V	"			OUT					"	C to c	"	"	"
			165 & 166	GND	"	"		"	GND	GND	"		OUT						"	C to d	"	"	"
			167 & 168	GND	"	"		"	GND	GND	"	OUT							"	C to e	"	"	"
			169 & 170	5.0 V	"	"		"	5.0 V	GND	"							OUT	"	C to f	"	"	"
			171 & 172	GND	"	"		"	GND	5.0 V	"							OUT	"	C to f	"	"	"
			173 & 174	5.0 V	5.0 V	"		"	IN	5.0 V	"					OUT			"	D to a	"	"	"
			175 & 176	GND	5.0 V	"		"	IN	GND	"			OUT					"	D to c	"	"	"
			177 & 178	"	GND	"		"	IN	"	"						OUT		"	D to g	"	"	"
			179 & 180	"	"	IN		GND	GND	"	"					OUT			"	LT to a	"	"	"
			181 & 182	"	"	IN	OUT	GND	"	"	"								"	LT to RBO	"	"	"
			183 & 184	"	"	5.0 V	IN	5.0 V	"	"	"					OUT			"	RBO to a	"	"	"
			185 & 186	"	"	"		IN	"	"	"					OUT			"	RBI to a	"	"	"
			187 & 188	"	"	"	OUT	IN	"	"	"								"	RBI to RBO	"	"	"

See notes at end of device types 06 and 07.

TABLE III. Group A inspection for device types 06 and 07 - Continued
Terminal conditions (pins not designated may be high ≥ 2.4 V or low ≤ 0.8 V or open).

Subgroup	Symbol	MIL-STD-883 method	Cases E,F Test no.	1 B	2 C	3 LT	4 RBO	5 RBI	6 D	7 A	8 GND	9 e	10 d	11 c	12 b	13 a	14 g	15 f	16 V_{CC}	Measured terminal	Test limits Min	Test limits Max	Unit
10 T_C = 125°C	t_{PHL} t_{PLH}	3003 (Fig.8)	189 & 190	GND	GND	5.0 V		5.0 V	GND	IN	GND					OUT			5.0 V	A to a	8	144	ns
		"	191 & 192	GND	5.0 V	"		"	5.0 V	"	"					OUT			"	A to a	"	"	"
		"	193 & 194	5.0 V	"	"		"	GND	"	"					OUT			"	A to a	"	"	"
		"	195 & 196	GND	"	"		"	"	"	"				OUT				"	A to b	"	"	"
		"	197 & 198	5.0 V	"	"		"	"	"	"				OUT				"	A to b	"	"	"
		"	199 & 200	5.0 V	GND	"		"	"	"	"			OUT					"	A to c	"	"	"
		"	201 & 202	GND	GND	"		"	"	"	"		OUT						"	A to d	"	"	"
		"	203 & 204	GND	5.0 V	"		"	"	"	"		OUT						"	A to d	"	"	"
		"	205 & 206	5.0 V	5.0 V	"		"	"	"	"		OUT						"	A to d	"	"	"
		"	207 & 208	GND	GND	"		"	"	"	"	OUT							"	A to e	"	"	"
		"	209 & 210	5.0 V	GND	"		"	"	"	"	OUT							"	A to e	"	"	"
		"	211 & 212	GND	GND	"		"	"	"	"							OUT	"	A to f	"	"	"
		"	213 & 214	5.0 V	5.0 V	"		"	5.0 V	"	"							OUT	"	A to f	"	"	"
		"	215 & 216	5.0 V	5.0 V	"		"	5.0 V	"	"						OUT		"	A to g	"	"	"
		"	217 & 218	GND	GND	"	OUT	GND	GND	"	"								"	A to RBO	"	"	"
		"	219 & 220	IN	GND	"		5.0 V	5.0 V	GND	"					OUT			"	B to a	"	"	"
		"	221 & 222	"	GND	"		"	GND	5.0 V	"					OUT			"	B to a	"	"	"
		"	223 & 224	"	5.0 V	"		"	GND	GND	"				OUT				"	B to b	"	"	"
		"	225 & 226	"	GND	"		"	5.0 V	GND	"				OUT				"	B to b	"	"	"
		"	227 & 228	"	5.0 V	"		"	GND	5.0 V	"				OUT				"	B to b	"	"	"
		"	229 & 230	"	GND	"		"	5.0 V	5.0 V	"				OUT				"	B to b	"	"	"
		"	231 & 232	"	GND	"		"	GND	GND	"			OUT					"	B to c	"	"	"
		"	233 & 234	"	GND	"		"	"	5.0 V	"		OUT						"	B to d	"	"	"
		"	235 & 236	"	5.0 V	"		"	"	GND	"		OUT						"	B to d	"	"	"
		"	237 & 238	"	5.0 V	"		"	"	GND	"	OUT							"	B to e	"	"	"
		"	239 & 240	"	5.0 V	"		"	"	5.0 V	"							OUT	"	B to f	"	"	"
		"	241 & 242	"	GND	"		"	"	GND	"							OUT	"	B to f	"	"	"
		"	243 & 244	"	GND	"		"	5.0 V	"	"							OUT	"	B to f	"	"	"
		"	245 & 246	"	GND	"		"	GND	"	"						OUT		"	B to g	"	"	"
		"	247 & 248	GND	IN	"		"	5.0 V	"	"					OUT			"	C to a	"	"	"
		"	249 & 250	5.0 V	"	"		"	GND	"	"			OUT					"	C to c	"	"	"
		"	251 & 252	GND	"	"		"	5.0 V	5.0 V	"			OUT					"	C to c	"	"	"
		"	253 & 254	GND	"	"		"	GND	GND	"		OUT						"	C to d	"	"	"
		"	255 & 256	GND	"	"		"	GND	GND	"	OUT							"	C to e	"	"	"
		"	257 & 258	5.0 V	"	"		"	5.0 V	GND	"							OUT	"	C to f	"	"	"
		"	259 & 260	GND	"	"		"	GND	5.0 V	"							OUT	"	C to f	"	"	"
		"	261 & 262	5.0 V	5.0 V	"		"	IN	5.0 V	"					OUT			"	D to a	"	"	"
		"	263 & 264	GND	5.0 V	"		"	IN	GND	"			OUT					"	D to c	"	"	"
		"	265 & 266	"	GND	"		"	IN	"	"						OUT		"	D to g	"	"	"
		"	267 & 268	"	"	IN		GND	GND	"	"					OUT			"	LT to a	"	"	"
		"	269 & 270	"	"	IN	OUT	GND	"	"	"								"	LT to RBO	"	"	"
		"	271 & 272	"	"	5.0 V	IN	5.0 V	"	"	"					OUT			"	RBO to a	"	"	"
		"	273 & 274	"	"	"		IN	"	"	"					OUT			"	RBI to a	"	"	"
		"	275 & 276	"	"	"	OUT	IN	"	"	"								"	RBI to RBO	"	"	"
11	Same tests terminal conditions and limits as for subgroup 10, except T_C = -55°C.																						

1/ X = Input may be high level or low level.
2/ Y = 30 volts for device type 05 and 15 volts for device type 07.
3/ Output voltages shall be either:
(a) H = 2.4 volts minimum and L = 0.4 volts minimum when using high speed checker double comparator, or
(b) H ≥ 1.5 volts and L ≤ 1.5 volts when using a high speed checker single comparator.
4/ CKT except C.

TABLE III. Group A inspection for device type 08.
Terminal conditions (pins not designated may be high ≥ 2.4 V or low ≤ 0.8 V or open).

Subgroup	Symbol	MIL-STD-883 method	Cases E,F Test no.	1 B	2 C	3 LT	4 RBO	5 RBI	6 D	7 A	8 GND	9 e	10 d	11 c	12 b	13 a	14 g	15 f	16 V_{CC}	Measured terminal	Test limits Min	Test limits Max	Unit
$T_C = 25°C$ [1]	V_{OH1} (See note 1)	3006	1	X	X	0.8 V		X	X	X	GND	-.4 mA							4.5 V	e	2.4		V
	"	"	2	"	"	"		"	"	"	"		-.4 mA						"	d	"		"
	"	"	3	"	"	"		"	"	"	"			-.4 mA					"	c	"		"
	"	"	4	"	"	"		"	"	"	"				-.4 mA				"	b	"		"
	"	"	5	"	"	"		"	"	"	"					-.4 mA			"	a	"		"
	"	"	6	"	"	"		"	"	"	"						-.4 mA		"	g	"		"
	"	"	7	"	"	"		"	"	"	"							-.4 mA	"	f	"		"
	V_{OH2}	3006	8	0.8 V	0.8 V	2.0 V	-.2 mA	0.8 V	0.8 V	0.8 V	"								"	RBO	2.4		"
	V_{OL1}	3007	9	"	"	"		"	"	"	"	6.4 mA							"	e		0.4	μA
	"	"	10	"	"	"		"	"	"	"		6.4 mA						"	d		"	"
	"	"	11	"	"	"		"	"	"	"			6.4 mA					"	c		"	"
	"	"	12	"	"	"		"	"	"	"				6.4 mA				"	b		"	"
	"	"	13	"	"	"		"	"	"	"					6.4 mA			"	a		"	"
	"	"	14	"	"	"		"	"	"	"						6.4 mA		"	g		"	"
	"	"	15	"	"	"		"	"	"	"							6.4 mA	"	f		"	"
	V_{OL2}	3007	16	0.8 V	0.8 V	2.0 V	8 mA	0.8 V	0.8 V	0.8 V	"								"	RBO		0.4	V
	V_{IC}		17							-12 mA	"								"	B		-1.5	V
			18	-12 mA							"								"	C		"	"
			19		-12 mA						"								"	RBO		"	"
			20						-12 mA		"								"	RBI		"	"
			21					-12 mA			"								"	D		"	"
			22				-12 mA				"								"	A		"	"
	I_{IL1}	3009	23(See note 3)	0.4 V	5.5 V	5.5 V		5.5 V	5.5 V	5.5 V	"								5.5 V	B	-.7	-1.6	mA
	"	"	23 CKT B	0.4 V	5.5 V	5.5 V		"	"	"	"								"	B	-.4	-1.3	"
	"	"	24(See note 3)	5.5 V	0.4 V	5.5 V		"	"	"	"								"	C	-.7	-1.6	"
	"	"	24 CKT B	"	0.4 V	5.5 V		"	"	"	"								"	C	-.4	-1.3	"
	"	"	25(See note 3)	"	5.5 V	0.4 V		"	"	"	"								"	LT	-.7	-1.6	"
	"	"	25 CKT B	"	"	0.4 V		"	"	"	"								"	LT	-.4	-1.3	"
	"	"	26(See note 3)	"	"	5.5 V		0.4 V	"	"	"								"	RBI	-.7	-1.6	"
	"	"	26 CKT B	"	"	"		0.4 V	"	"	"								"	RBI	-.4	-1.3	"
	"	"	27(See note 3)	"	"	"		5.5 V	0.4 V	"	"								"	D	-.7	-1.6	"
	"	"	27 CKT B	"	"	"		"	0.4 V	"	"								"	D	-.4	-1.3	"
	"	"	28(See note 3)	"	"	"		"	5.5 V	0.4 V	"								"	A	-.7	-1.6	"
	"	"	28 CKT B	"	"	"		"	5.5 V	0.4 V	"								"	A	-.4	-1.3	"
	I_{IL2}	3009	29	"	"	"	0.4 V	"	5.5 V	5.5 V	"								"	RBO	-1.7	-4.2	mA
	I_{IH1}	3010	30	2.4 V	GND	GND		GND	GND	GND	"								"	B		40	μA
	"	"	31	GND	2.4 V	GND		"	"	"	"								"	C		"	"
	"	"	32	"	GND	2.4 V		"	"	"	"								"	LT		"	"
	"	"	33	"	"	GND		2.4 V	"	"	"								"	RBI		"	"
	"	"	34	"	"	"		GND	2.4 V	"	"								"	D		"	"
	"	"	35	"	"	"		GND	GND	2.4 V	"								"	A		"	"
	I_{IH2}	3010	36	5.5 V	GND	GND		GND	GND	GND	"								"	B		100	μA
	"	"	37	GND	5.5 V	GND		GND	"	"	"								"	C		"	"
	"	"	38	"	GND	5.5 V		GND	"	"	"								"	LT		"	"
	"	"	39	"	"	GND		5.5 V	"	"	"								"	RBI		"	"
	"	"	40	"	"	"		GND	5.5 V	"	"								"	D		"	"
	"	"	41	"	"	"		GND	GND	5.5 V	"								"	A		"	"
	I_{OS}	3011	42	X	X	GND		X	X	X	"					GND			"	a		-4	mA
	"	"	43	"	"	"		"	"	"	"				GND				"	b		"	"
	"	"	44	"	"	"		"	"	"	"			GND					"	c		"	"
	"	"	45	"	"	"		"	"	"	"		GND						"	d		"	"
	"	"	46	"	"	"		"	"	"	"	GND							"	e		"	"
	"	"	47	"	"	"		"	"	"	"							GND	"	f		"	"
	"	"	48	"	"	"		"	"	"	"						GND		"	g		"	"
	"	"	49	"	"	"	GND	"	"	"	"								"	RBO		"	"
	I_{CC}	3005	50	"	"	"		"	"	"	"								"	V_{CC}		76	mA

See notes at the end of device type 08.

TABLE III. Group A inspection for device type 08 - Continued.
Terminal conditions (pins not designated may be high ≥ 2.4 V or low ≤ 0.8 V or open).

Subgroup	Symbol	MIL-STD-883 method	Cases E,F Test no.	1 B	2 C	3 LT	4 RBO	5 RBI	6 D	7 A	8 GND	9 e	10 d	11 c	12 b	13 a	14 g	15 f	16 V_{CC}	Measured terminal	Test limits Min	Test limits Max	Unit
2	Same tests, terminal conditions and limits as for subgroup 1, except T_C = 125°C and V_{IC} tests are omitted.																						
3	Same tests, terminal conditions and limits as for subgroup 1, except T_C = -55°C and V_{IC} tests are omitted.																						
7 T_C = 25°C	Truth table test		51	GND	GND	5.0 V		5.0 V	GND	GND	GND	H	H	H	H	H	L	H	5.0 V		SEE NOTE 2		
			52	GND	"	"		X	"	5.0 V	"	L	L	H	"	L	L	L	"				
			53	5.0 V	"	"		"	"	GND	"	H	H	L	"	H	H	"	"				
			54	5.0 V	"	"		"	"	5.0 V	"	L	H	H	"	H	"	"	"				
			55	GND	5.0 V	"		"	"	GND	"	"	L	"	"	L	"	H	"				
			56	GND	"	"		"	"	5.0 V	"	"	H	"	L	H	"	"	"				
			57	5.0 V	"	"		"	"	GND	"	H	H	"	L	L	"	"	"				
			58	5.0 V	"	"		"	"	5.0 V	"	L	L	"	H	H	L	L	"				
			59	GND	GND	"		"	5.0 V	GND	"	H	H	"	"	"	H	H	"				
			60	GND	"	"		"	"	5.0 V	"	L	L	"	"	"	"	H	"				
			61	5.0 V	"	"		"	"	GND	"	H	H	L	L	L	"	L	"				
			62	5.0 V	"	"		"	"	5.0 V	"	L	H	H	L	"	"	L	"				
			63	GND	5.0 V	"		"	"	GND	"	"	L	L	H	"	"	H	"				
			64	GND	"	"		"	"	5.0 V	"	"	H	"	L	H	"	"	"				
			65	5.0 V	"	"		"	"	GND	"	H	H	"	"	L	"	"	"				
			66	5.0 V	"	"		"	"	5.0 V	"	L	L	"	"	"	L	L	"				
			67	X	X	X	GND	"	X	X	"	"	"	"	"	"	"	"	"				
			68	GND	GND	5.0 V	L	GND	GND	GND	"	"	"	"	"	"	"	"	"				
			69	X	X	GND		X	X	X	"	H	H	H	H	H	H	H	"				
8	Truth table test		70 - 89	Same tests as subgroup 7, except T_C = 125°C.																			
			90 - 109	Same tests as subgroup 7, except T_C = -55°C.																			
9 T_C = 25°C	t_{PHL} t_{PLH}	3003 (Fig.9)	110 & 111	GND	GND	5.0 V		5.0 V	GND	IN	GND					OUT			5.0 V	A to a	8	104	ns
		"	112 & 113	"	"	"		"	"	"	"		OUT						"	A to d	"	"	"
		"	114 & 115	"	"	"		"	"	"	"	OUT							"	A to e	"	"	"
		"	116 & 117	"	"	"		"	"	"	"							OUT	"	A to f	"	"	"
		"	118 & 119	5.0 V	5.0 V	"		"	"	"	"					OUT			"	A to a	"	"	"
		"	120 & 121	GND	5.0 V	"		"	"	"	"				OUT				"	A to b	"	"	"
		"	122 & 123	5.0 V	5.0 V	"		"	"	"	"		OUT						"	A to d	"	"	"
		"	124 & 125	GND	GND	"	OUT	GND	"	"	"								"	A to RBO	"	"	"
		"	126 & 127	IN	"	"		5.0 V	"	GND	"			OUT					"	B to c	"	"	"
		"	128 & 129	"	"	"		"	"	"	"							OUT	"	B to f	"	"	"
		"	130 & 131	"	"	"		"	"	"	"						OUT		"	B to g	"	"	"
		"	132 & 133	"	"	"		"	5.0 V	"	"					OUT			"	B to a	"	"	"
		"	134 & 135	"	5.0 V	"		"	GND	5.0 V	"							OUT	"	B to f	"	"	"
		"	136 & 137	"	5.0 V	"		"	"	5.0 V	"						OUT		"	B to g	"	"	"
		"	138 & 139	"	5.0 V	"		"	"	GND	"	OUT							"	B to e	"	"	"
		"	140 & 141	"	IN	"		"	"	"	"		OUT						"	C to d	"	"	"
		"	142 & 143	5.0 V	IN	"		"	"	"	"				OUT				"	C to b	"	"	"
		"	144 & 145	"	GND	"		"	IN	"	"					OUT			"	D to a	"	"	"
		"	146 & 147	"	GND	"		"	IN	"	"				OUT				"	D to b	"	"	"
		"	148 & 149	GND	5.0 V	"		"	IN	"	"			OUT					"	D to c	"	"	"
		"	150 & 151	GND	GND	IN		GND	GND	"	"					OUT			"	LT to a	"	"	"
		"	152 & 153	X	X	GND	IN	X	X	X	"					OUT			"	RBO to a	"	"	"
		"	154 & 155	GND	GND	5.0 V		IN	GND	GND	"					OUT			"	RBI to a	"	"	"

See notes at end of device type 08.

TABLE III. Group A inspection for device type 08 - Continued.
Terminal conditions (pins not designated may be high ≥ 2.4 V or low ≤ 0.8 V or open).

Subgroup	Symbol	MIL-STD-883 method	Cases E,F Test no.	1 B	2 C	3 LT	4 RBO	5 RBI	6 D	7 A	8 GND	9 e	10 d	11 c	12 b	13 a	14 g	15 f	16 V_{CC}	Measured terminal	Test limits Min	Test limits Max	Unit
10 T_C = 125°C	t_{PHL} t_{PLH}	3003 (Fig.9)	156 & 157	GND	GND	5.0 V		5.0 V	GND	IN	GND					OUT			5.0 V	A to a	8	144	ns
		"	158 & 159	"	"	"		"	"	"	"		OUT						"	A to d	"	"	"
		"	160 & 161	"	"	"		"	"	"	"	OUT							"	A to e	"	"	"
		"	162 & 163	"	"	"		"	"	"	"							OUT	"	A to f	"	"	"
		"	164 & 165	5.0 V	5.0 V	"		"	"	"	"					OUT			"	A to a	"	"	"
		"	166 & 167	GND	5.0 V	"		"	"	"	"				OUT				"	A to b	"	"	"
		"	168 & 169	5.0 V	5.0 V	"		"	"	"	"		OUT						"	A to d	"	"	"
		"	170 & 171	GND	GND	"	OUT	GND	"	"	"								"	A to RBO	"	"	"
		"	172 & 173	IN	"	"		5.0 V	"	GND	"			OUT					"	B to c	"	"	"
		"	174 & 175	"	"	"		"	"	"	"							OUT	"	B to f	"	"	"
		"	176 & 177	"	"	"		"	"	"	"						OUT		"	B to g	"	"	"
		"	178 & 179	"	"	"		"	5.0 V	"	"					OUT			"	B to a	"	"	"
		"	180 & 181	"	5.0 V	"		"	GND	5.0 V	"							OUT	"	B to f	"	"	"
		"	182 & 183	"	5.0 V	"		"	"	5.0 V	"						OUT		"	B to g	"	"	"
		"	184 & 185	"	5.0 V	"		"	"	GND	"	OUT							"	B to e	"	"	"
		"	186 & 187	"	IN	"		"	"	"	"		OUT						"	C to d	"	"	"
		"	188 & 189	5.0 V	IN	"		"	"	"	"				OUT				"	C to b	"	"	"
		"	190 & 191	"	GND	"		"	IN	"	"					OUT			"	D to a	"	"	"
		"	191 & 193	"	GND	"		"	IN	"	"				OUT				"	D to b	"	"	"
		"	194 & 195	GND	5.0 V	"		"	IN	"	"			OUT					"	D to c	"	"	"
		"	196 & 197	GND	GND	IN		GND	GND	"	"					OUT			"	LT to a	"	"	"
		"	198 & 199	X	X	GND	IN	X	X	X	"					OUT			"	RBO to a	"	"	"
		"	200 & 201	GND	GND	5.0 V		IN	GND	GND	"					OUT			"	RBI to a	"	"	"
11	Same tests terminal conditions and limits as for subgroup 10, except T_C = -55°C.																						

1/ X = input may be high level or low level (for I_{OS}, input may be GND or 5.5 V).

2/ Output voltages shall be either:
(a) H = 2.4 volts minimum and L = 0.4 volts maximum when using a high speed checker double comparator, or
(b) H ≥ 1.5 volts and L ≤ 1.5 volts when using a high speed checker single comparator.

3/ CKT except B.

TABLE III. Group A inspection for device type 09. 1/
Terminal conditions (pins not designated maybe high ≥ 2.4 V or low ≤ 0.8 V or open).

Subgroup	Symbol	MIL-STD-883 method	Cases A,B,D / Case C Test no.	1 / 1 / B	2 / 2 / C	3 / 3 / BI	4 / 4 / D	5 / 5 / A	6 / 6 / e	7 / 7 / GND	8 / 8 / d	9 / 9 / c	10 / 10 / b	11 / 11 / a	12 / 12 / g	13 / 13 / f	14 / 14 / V_{CC}	Measured terminal	Limits Min	Limits Max	Unit
1 T_C = 25°C	V_{OL} (See note 2)	3007	1	X	X	0.8 V	X	X	10 mA	GND							4.5 V	e		0.4	V
	"	"	2	"	"	"	"	"		"	10 mA						"	d		"	"
	"	"	3	"	"	"	"	"		"		10 mA					"	c		"	"
	"	"	4	"	"	"	"	"		"			10 mA				"	b		"	"
	"	"	5	"	"	"	"	"		"				10 mA			"	a		"	"
	"	"	6	"	"	"	"	"		"					10 mA		"	g		"	"
	"	"	7	"	"	"	"	"		"						10 mA	"	f		"	"
	I_{CEX}		8	0.8 V	0.8 V	2.0 V	2.0 V	0.8 V		"				5.5 V			"	e		250	μA
			9	"	"	"	"	"		"			5.5 V				"	d		"	"
			10	"	"	"	"	"		"		5.5 V					"	c		"	"
			11	"	"	"	"	"		"	5.5 V						"	b		"	"
			12	"	"	"	"	"	5.5 V	"							"	a		"	"
			13	"	"	"	"	"		"						5.5 V	"	g		"	"
			14	"	"	"	"	"		"					5.5 V		"	f		"	"
	V_{IC}		15					-12 mA		"							"	A		-1.5	V
			16	-12 mA						"							"	B		"	"
			17		-12 mA					"							"	C		"	"
			18				-12 mA			"							"	D		"	"
			19			-12 mA				"							"	BI		"	"
	I_{IL}	3009	20 CKT A,C	5.5 V	5.5 V	5.5 V	5.5 V	0.4 V		"							5.5 V	A	-0.7	-1.6	mA
	"	"	20 CKT B	5.5 V	"	"	"	0.4 V		"							"	A	-0.4	-1.3	"
	"	"	21 CKT A,C	0.4 V	"	"	"	5.5 V		"							"	B	-0.7	-1.6	"
	"	"	21 CKT B	0.4 V	"	"	"	"		"							"	B	-0.4	-1.3	"
	"	"	22 CKT A,C	5.5 V	0.4 V	"	"	"		"							"	C	-0.7	-1.6	"
	"	"	22 CKT B	"	0.4 V	"	"	"		"							"	C	-0.4	-1.3	"
	"	"	23 CKT A,C	"	5.5 V	"	0.4 V	"		"							"	D	-0.7	-1.6	"
	"	"	23 CKT B	"	"	"	0.4 V	"		"							"	D	-0.4	-1.3	"
	"	"	24 CKT A,C	"	"	0.4 V	5.5 V	"		"							"	BI	-0.7	-1.6	"
	"	"	24 CKT B	"	"	0.4 V	5.5 V	"		"							"	BI	-0.4	-1.3	"
	I_{IH1}	3010	25	GND	GND	GND	GND	2.4 V		"							"	A		40	μA
	"	"	26	2.4 V	GND	"	"	GND		"							"	B		"	"
	"	"	27	GND	2.4 V	"	"	"		"							"	C		"	"
	"	"	28	"	GND	"	2.4 V	"		"							"	D		"	"
	"	"	29	"	"	2.4 V	GND	"		"							"	BI		"	"
	I_{IH2}	3010	30	"	"	GND	"	5.5 V		"							"	A		100	μA
	"	"	31	5.5 V	"	"	"	GND		"							"	B		"	"
	"	"	32	GND	5.5 V	"	"	"		"							"	C		"	"
	"	"	33	"	GND	"	5.5 V	"		"							"	D		"	"
	"	"	34	"	"	5.5 V	GND	"		"							"	BI		"	"
	I_{CC}	3005	35	GND	GND	GND	GND	GND		"							5.5 V	V_{CC}		47	mA
2	Same tests, terminal conditions and limits as for subgroup 1, except T_A = 125°C and V_{IC} testsare omitted.																				
3	Same tests, terminal conditions and limits as for subgroup 1, except T_A = -55°C and V_{IC} testsare omitted.																				
7 T_C = 25°C	Truth table test		36	GND	GND		GND	GND	H	GND	H	H	H	H	L	H	5.5 V	See note 3			
			37	GND	"		"	5.0 V	L	"	L	H	"	L	L	L	"				
			38	5.0 V	"		"	GNd	H	"	H	L	"	H	H	"	"				
			39	5.0 V	"		"	5.0 V	L	"	H	H	"	H	"	"	"				
			40	GND	5.0 V		"	GND	L	"	L	"	"	L	"	H	"				
			41	GND	"		"	5.0 V	L	"	H	"	L	H	"	"	"				
			42	5.0 V	"		"	GND	H	"	H	"	L	L	"	"	"				
			43	5.0 V	"		"	5.0 V	L	"	L	"	H	H	L	L	"				
			44	GND	GND		5.0 V	GND	H	"	H	"	"	"	H	H	"				
			45	GND	"		"	5.0 V	L	"	L	"	"	"	"	H	"				
			46	5.0 V	"		"	GND	H	"	H	L	L	L	"	L	"				
			47	5.0 V	"		"	5.0 V	L	"	H	H	L	"	"	L	"				
			48	GND	5.0 V		"	GND	L	"	L	L	H	"	"	H	"				
			49	GND	"		"	5.0 V	L	"	H	"	L	H	"	"	"				
			50	5.0 V	"		"	GND	H	"	H	"	"	L	"	"	"				
			51	5.0 V	"		"	5.0 V	L	"	L	"	"	"	L	L	"				
			52	X	X	GND	X	X	L	"	L	"	"	"	L	L	"				

See notes at end of device type 09.

TABLE III. Group A inspection for device type 09 - Continued. 1/
Terminal conditions (pins not designated maybe high ≥ 2.4 V or low ≤ 0.8 V or open).

Subgroup	Symbol	MIL-STD-883 method	Cases A,B,D	1	2	3	4	5	6	7	8	9	10	11	12	13	14	Measured terminal	Limits		Unit
			Case C	1	2	3	4	5	6	7	8	9	10	11	12	13	14		Min	Max	
			Test no.	B	C	BI	D	A	e	GND	d	c	b	a	g	f	V_{CC}				
8	Truth table test		53 to 69	Same tests as subgroup 7, except T_C = 125°C.																	
	Truth table test		70 to 76	Same tests as subgroup 7, except T_C = -55°C.																	
9 T_C = 25°C	t_{PHL} t_{PLH}	3003 (Fig. 10)	77 & 78	GND	GND	5.0 V	GND	IN		GND				OUT			5.0 V	A to a	8	104	ns
		"	79 & 80	"	"	"	"	"		"	OUT						"	A to d	"	"	"
		"	81 & 82	"	"	"	"	"	OUT	"							"	A to e	"	"	"
		"	83 & 84	"	"	"	"	"		"						OUT	"	A to f	"	"	"
		"	85 & 86	5.0 V	5.0 V	"	"	"		"				OUT			"	A to a	"	"	"
		"	87 & 88	GND	5.0 V	"	"	"		"			OUT				"	A to b	"	"	"
		"	89 & 90	5.0 V	5.0 V	"	"	"		"	OUT						"	A to d	"	"	"
		"	91 & 92	IN	GND	"	"	GND		"		OUT					"	B to c	"	"	"
		"	93 & 94	"	"	"	"	"		"						OUT	"	B to f	"	"	"
		"	95 & 96	"	"	"	"	"		"					OUT		"	B to g	"	"	"
		"	97 & 98	"	"	"	5.0 V	"		"				OUT			"	B to a	"	"	"
		"	99 & 100	"	5.0 V	"	GND	5.0 V		"						OUT	"	B to f	"	"	"
		"	101 & 102	"	5.0 V	"	"	GND	OUT	"							"	B to e	"	"	"
		"	103 & 104	"	5.0 V	"	"	5.0 V		"					OUT		"	B to g	"	"	"
		"	105 & 106	GND	IN	"	"	GND		"	OUT						"	C to d	"	"	"
		"	107 & 108	5.0 V	IN	"	"	GND		"			OUT				"	C to b	"	"	"
		"	109 & 110	GND	GND	"	IN	GND		"					OUT		"	D to g	"	"	"
		"	111 & 112	5.0 V	GND	"	IN	5.0 V		"			OUT				"	D to b	"	"	"
		"	113 & 114	GND	5.0 V	"	IN	GND		"		OUT					"	D to c	"	"	"
		"	115 & 116	GND	GND	IN	GND	GND		"				OUT			"	BI to a	"	"	"
10 T_C = 125°C	t_{PHL} t_{PLH}	"	117 & 118	GND	"	5.0 V	"	IN		"				OUT			"	A to a	"	144	"
		"	119 & 120	"	"	"	"	"		"	OUT						"	A to d	"	"	"
		"	121 & 122	"	"	"	"	"	OUT	"							"	A to e	"	"	"
		"	123 & 124	"	"	"	"	"		"						OUT	"	A to f	"	"	"
		"	125 & 126	5.0 V	5.0 V	"	"	"		"				OUT			"	A to a	"	"	"
		"	127 & 128	GND	5.0 V	"	"	"		"			OUT				"	A to b	"	"	"
		"	129 & 130	5.0 V	5.0 V	"	"	"		"	OUT						"	A to d	"	"	"
		"	131 & 132	IN	GND	"	"	GND		"		OUT					"	B to c	"	"	"
		"	133 & 134	"	"	"	"	"		"						OUT	"	B to f	"	"	"
		"	135 & 136	"	"	"	"	"		"					OUT		"	B to g	"	"	"
		"	137 & 138	"	"	"	5.0 V	"		"				OUT			"	B to a	"	"	"
		"	139 & 140	"	5.0 V	"	GND	5.0 V		"						OUT	"	B to f	"	"	"
		"	141 & 142	"	5.0 V	"	"	GND	OUT	"							"	B to e	"	"	"
		"	143 & 144	"	5.0 V	"	"	5.0 V		"					OUT		"	B to g	"	"	"
		"	145 & 146	GND	IN	"	"	GND		"	OUT						"	C to d	"	"	"
		"	147 & 148	5.0 V	IN	"	"	GND		"			OUT				"	C to b	"	"	"
		"	149 & 150	GND	GND	"	IN	GND		"					OUT		"	D to g	"	"	"
		"	151 & 152	5.0 V	GND	"	IN	5.0 V		"			OUT				"	D to b	"	"	"
		"	153 & 154	GND	5.0 V	"	IN	GND		"		OUT					"	D to c	"	"	"
		"	155 & 156	GND	GND	IN	GND	GND		"				OUT			"	BI to a	"	"	"
11	Same tests, terminal conditions and limits as for subgroup 10, except T_C = -55°C.																				

1/ Qualification requirement are removed for this device type.
2/ X = Input may be high or low.
3/ Output voltages shall be either:
(a) H = 2.4 volts minimum and L = 0.4 volts maximum when using a high speed checker double comparator, or
(b) H ≥ 1.5 volts and L ≤ 1.5 volts when using a high speed checker single comparator.

4.3 Qualification inspection. Qualification inspection shall be in accordance with MIL-M-38510. Inspections to be performed shall be those specified in method 5005 of MIL-STD-883 and herein for groups A, B, C, and D inspections (see 4.4.1 through 4.4.4). Qualification inspection is not required for device types 02, 03, and 09.

4.4 Quality conformance inspection. Quality conformance inspection shall be in accordance with MIL-M-38510 and as specified herein. Inspections to be performed shall be those specified in method 5005 of MIL-STD-883 and herein for groups A, B, C, and D inspections (see 4.4.1 through 4.4.4). Generic test data (see 6.6) may be used to satisfy the requirements for groups C and D inspections. Quality conformance inspection shall be completed on the specific devices covered by this specification before they are shipped.

4.4.1 Group A inspection. Group A inspection shall be in accordance with table I of method 5005 of MIL-STD-883 and as follows:

a. Electrical tests requirements shall be as specified in table II herein.

b. Subgroups 4, 5, and 6, of table I of method 5005 of MIL-STD-883 shall be omitted.

4.4.2 Group B inspection. Group B inspection shall be in accordance with table II of method 5005 of MIL-STD-883. Electrical test requirements for device types 01, and 03 shall be as specified in table II herein.

4.4.3 Group C inspection. Group C inspection shall be in accordance with table III of method 5005 of MIL-STD-883 and as follows:

a. End-point electrical parameters shall be as specified in table II herein.

b. Steady-state life test (method 1005 of MIL-STD-883) conditions:

(1) Test condition D or E, using the circuit shown on figure 4, or equivalent.

(2) T_A = +125°C minimum.

(3) Test duration: 1,000 hours, except as permitted by method 1005 of MIL-STD-883.

4.4.4 Group D inspection. Group D inspection shall be in accordance with table IV of method 5005 of MIL-STD-883. End-point electrical tests shall be as specified in table II herein.

4.5 Methods of inspection. Methods of inspection shall be specified as follows:

4.5.1 Voltage and current. All voltages given are referenced to the microcircuit ground terminal. Currents given are conventional and positive when flowing into the referenced terminal.

5. PACKAGING

5.1 Packaging requirements. The requirements for packaging shall be in accordance with MIL-M-38510.

6. NOTES

6.1 Intended use. Microcircuits conforming to this specification are intended for original equipment design applications and logisitic support of existing equipment. Device types 02, 03, and 09 are intended for use for logistics support of existing equipment.

6.2 Ordering data. The acquisition document should specify the following:

a. Complete part number (see 1.2).

b. Requirements for delivery of one copy of the quality conformance inspection data pertinent to the device inspection lot to be supplied with each shipment by the device manufacturer, if applicable.

c. Requirements for certificate of compliance, if applicable.

d. Requirements for notification of change of product or process to the contracting activity for device types 02, 03, and 09. In addition to that, notification to the qualifying activity for device types 01, 04, 05, 06, 07, and 08, if applicable.

e. For device types 01, 04, 05, 06, 07, and 08 requirements for failure analysis (including required test condition of method 5003 of MIL-STD-883), corrective action and reporting of results, if applicable.

f. Requirements for product assurance options, device types 01, 04, 05, 06, 07, and 08. Requirements for packaging and packing, device types 02, 03, and 09.

g. Requirements for special carriers, lead lengths, or lead forming, if applicable. These requirements shall not affect the part number. Unless otherwise specified, these requirements shall not apply to direct purchase by or direct shipment to the Government.

h. Requirements for "JAN" marking. This shall apply to device types 01, 04, 05, 06, 07, and 08 only.

6.3 Abbreviations, symbols, and definitions. The abbreviations, symbols, and definitions used herein are defined in MIL-M-38510, MIL-STD-1331, and as follows:

GND - - - - - - - - - - - - - - Ground zero voltage potential.
I_{IN} - - - - - - - - - - - - - - Current flowing into an input terminal.
V_{IN} - - - - - - - - - - - - - - Voltage level at an input terminal.

6.4 Logistic support. Lead materials and finishes (see 3.3) are interchangeable. Unless otherwise specified, microcircuits acquired for Government logistic support will be acquired to device class B (see 1.2.2), lead material and finish C (see 3.3). Longer length leads and lead forming shall not affect the part number.

6.5 Generic test data. Generic test data may be used to satisfy the requirements of 4.4.3. Group C generic test data shall be on date codes no more than 1 year old and on a die in the same microcircuit group (see appendix E of MIL-M-38510) with the same material, design, and process and from the same plant as the die represented. Group D generic data shall be on date codes no more than 1 year old and on the same package type (see terms, definitions, and symbols of MIL-M-38510) and from the same plant as the package represented. The vendor is required to retain the generic data for a period of not less than 36 months from the date of shipment.

6.6 Substitutability. The cross-reference information below is presented for the convenience of users. Microcircuits covered by this specification will functionally replace the listed generic-industry type. Generic-industry microcircuit types may not have equivalent operational performance characteristics across military temperature ranges or reliability factors equivalent to MIL-M-38510 device types and may have slight physical variations in relation to case size. The presence of this information shall not be deemed as permitting substitution of generic-industry types for MIL-M-38510 types or as a waiver of any of the provisions of MIL-M-38510.

Military device type	Generic-industry type
01	5442
02 5/	5443
03 5/	5444
04	5445
05	54145
06	5446
07	5447
08	5448
09 5/	5449

5/ Qualification requests are removed for this device type.

6.7 Manufacturers' designators. Manufacturers' circuits included in this specification are designted as shown in table IV herein.

TABLE IV. Manufacturers' designations.

Device type	Circuit				
	Texas Instrument Incorporated	Signetics Corporation	National Semi-Conductor Corporation	Motorola Incorporated	Fairchild
01	D	C	E	B	A
04	C	A	E	B	D
05	C	A	E	B	D
06	C	B	D		
07	C	B	D		
08	B	C	E	A	

6.8 Ordering guidance. Since the qualification and certification requirements have been removed from the specification for device types 02, 03, and 09, orders may be specified immediately.

6.9 Changes from previous issue. Asterisks are not used in this revision to identify changes with respect to the previous issue, due to the extensiveness of the changes.

Custodians:
Army - ER
Navy - EC
Air Force - 17

Review activities:
Army - AR, MI
Navy - OS, SH, TD
Air Force - 11, 19, 85, 99
DLA - ES

User activities:
Army - SM
Navy - AS, CG, MC

Preparing activity:
Air Force - 17

Agent:
DLA - ES

(Project 5962-0902)