INCH-POUND
MIL-M-38510/126C
30 April 2004
SUPERSEDING
MIL-M-38510/126B
30 December 1988

MILITARY SPECIFICATION

MICROCIRCUITS, LINEAR, REGULATING, PULSE WIDTH MODULATOR, MONOLITHIC SILICON

Reactivated after 30 April 2004 and may be used for either new or existing design acquisition.

This specification is approved for use by all Departments and Agencies of the Department of Defense.

The requirements for acquiring the product herein shall consist of this specification sheet and MIL-PRF-38535.

1. SCOPE

1.1 Scope. This specification covers the detail requirements for monolithic silicon, pulse width modulator microcircuits. Two product assurance classes and a choice of case outlines and lead finishes are provided and are reflected in the complete part number. For this product, the requirements of MIL-M-38510 have been superseded by MIL-PRF-38535, (see 6.3)

1.2 Part or Identifying Number (PIN). The PIN is in accordance with MIL-PRF-38535, and as specified herein.

1.2.1 Device types. The device types are as follows:

Device type	Circuit
01	Regulating, pulse width modulator
02	Regulating, pulse width modulator
03	Regulating, pulse width modulator
04	Regulating, pulse width modulator

1.2.2 Device class. The device class is the product assurance level as defined in MIL-PRF-38535.

1.2.3 Case outlines. The case outlines are as designated in MIL-STD-1835 and as follows:

Outline letter	Descriptive designator	Terminals	Package style
E	GDIP1-T16 or CDIP2-T16	16	Dual in line
V	GDIP1-T18 or CDIP2-T18	18	Dual in line

Comments, suggestions, or questions on this document should be addressed to: Commander, Defense Supply Center Columbus, ATTN: DSCC-VAS, 3990 East Broad St., Columbus, OH 43216-5000, or email linear@dscc.dla.mil. Since contact information can change, you may want to verify the currency of this address information using the ASSIST Online database at www.dodssp.daps.mil.

1.3 Absolute maximum ratings.

Input voltage ..... 42 V
Collector supply voltage:
  Device type 01 ..... 42 V
  Device types 02, 03, 04 ..... 37 V
Output current (each output):
  Device type 01 ..... ±100 mA
  Device types 02, 03, 04 ..... ±200 mA
Reference output current ..... -50 mA
Oscillator charging current ..... -5 mA
Logic inputs ..... -0.3 V to V_{REF}
Analog inputs ..... -0.3 V to V_{IN}
Lead temperature (soldering, 10 seconds) ..... +300°C.
Storage temperature range ..... -65°C to +150°C
Junction temperature (T_J) ..... +150°C

1.4 Recommended operating conditions.

Input voltage range :
  Device type 01 ..... +8 V to +40 V, class B
  +8 V to +40 V, class S
  Device types 02 and 04 1/ ..... +8 V to +30 V, class B
  +8 V to +27 V, class S
  Device type 03 1/ ..... +8 V to +20 V, class B
  +8 V to +20 V, class S
Oscillator frequency range :
  Device type 01 ..... 10 kHz to 200 kHz
  Device types 02 and 04 ..... 150 kHz to 300 kHz
  Device type 03 ..... 100 kHz to 350 kHz
Collector supply voltage:
  Device type 01 ..... +4.5 V to +40 V
  Device type 02, 03, and 04 ..... +4.5 V to +35 V
Operating temperature range ..... -55°C to +125°C

1.5 Power and thermal characteristics.

Package	Case outline	Maximum allowable power dissipation	Maximum θ_{JC}	Maximum θ_{JA}
16 lead dual in line	E	250 mW at T_A = +125°C	60°C/W	100°C/W
18 lead dual in line	V	250 mW at T_A = +125°C	42°C/W	100°C/W

1/ +8 V to +35 V operation is allowed if the maximum junction temperature is not exceeded. Heat sinking may be required.

2. APPLICABLE DOCUMENTS

2.1 General. The documents listed in this section are specified in sections 3, 4, or 5 of this specification. This section does not include documents cited in other sections of this specification or recommended for additional information or as examples. While every effort has been made to ensure the completeness of this list, document users are cautioned that they must meet all specified requirements of documents cited in sections 3, 4, or 5 of this specification, whether or not they are listed.

2.2 Government documents.

2.2.1 Specifications, standards, and handbooks. The following specifications and standards form a part of this specification to the extent specified herein. Unless otherwise specified, the issues of these documents are those cited in the solicitation or contract.

DEPARTMENT OF DEFENSE SPECIFICATIONS

MIL-PRF-38535 - Integrated Circuits (Microcircuits) Manufacturing, General Specification for.

DEPARTMENT OF DEFENSE STANDARDS

MIL-STD-883 - Test Method Standard for Microelectronics.
MIL-STD-1835 - Interface Standard Electronic Component Case Outlines.

(Copies of these documents are available online at http://assist.daps.dla.mil/quicksearch/ or www.dodssp.daps.mil or from the Standardization Document Order Desk, 700 Robbins Avenue, Building 4D, Philadelphia, PA 19111-5094.)

2.3 Order of precedence. In the event of a conflict between the text of this specification and the references cited herein the text of this document takes precedence. Nothing in this document, however, supersedes applicable laws and regulations unless a specific exemption has been obtained.

3. REQUIREMENTS

3.1 Qualification. Microcircuits furnished under this specification shall be products that are manufactured by a manufacturer authorized by the qualifying activity for listing on the applicable qualified manufacturers list before contract award (see 4.3 and 6.4).

3.2 Item requirements. The individual item requirements shall be in accordance with MIL-PRF-38535 and as specified herein or as modified in the device manufacturer's Quality Management (QM) plan. The modification in the QM plan shall not affect the form, fit, or function as described herein.

3.3 Design, construction, and physical dimensions. The design, construction, and physical dimensions shall be as specified in MIL-PRF-38535 and herein.

3.3.1 Terminal connections. The terminal connections shall be as specified on figure 1.

3.3.2 Functional block diagrams. The functional block diagrams shall be as specified on figure 2.

3.3.3 Schematic circuits. The schematic circuits shall be maintained by the manufacturer and made available to the qualifying activity and the preparing activity upon request.

3.3.4 Case outlines. The case outlines shall be as specified in 1.2.3.

3.4 Lead material and finish. The lead material and finish shall be in accordance with MIL-PRF-38535 (see 6.6).

3.5 Electrical performance characteristics. The electrical performance characteristics are as specified in table I, and apply over the full recommended ambient operating temperature range, unless otherwise specified.

TABLE I. Electrical performance characteristics.

Test	Symbol	Conditions V_{IN} = 20 V dc, R_T = 2 kΩ ±0.1 % C_T = 0.01 µF ±0.1 % -55°C ≤ T_C ≤ +125°C unless otherwise specified	Device type	Limits Min	Limits Max	Units
Error amplifier section						
Input offset voltage	V_{IO}	V_{CM} = 2.5 V	01	-5	5	mV
Input bias current	I_{IB}	V_{CM} = 2.5 V	01	.01	10	µA
Input offset current	I_{IO}	V_{CM} = 2.5 V	01	-1	1	µA
Compensation current (sink)	I_{COS1}	$V_{IN}(I) – V_{IN}(NI) \geq$ 150 mV, T_C = +25°C	01	65	170	µA
Compensation current (source)	I_{COS2}	$V_{IN}(IN) – V_{IN}(I) \geq$ 150 mV, T_C = +25°C	01	-170	-65	µA
Common mode rejection	CMR	1.8 V ≤ V_{CM} ≤ 3.4 V	01	70		dB
Open loop voltage gain	A_{VS}	T_C = +25°C	01	72		dB
		T_C = -55°C, +125°C		68		
Unity gain bandwidth	G_{BW}	T_C = +25°C, see figure 5	01	2		MHz
Reference section						
Output voltage	V_{REF}		01	4.8	5.2	V
Line regulation	V_{RLINE}	8 V ≤ V_{IN} ≤ 40 V	01	-20	20	mV
Load regulation	V_{RLOAD}	-20 mA ≤ I_{REF} ≤ 0 mA	01	-50	50	mV
Ripple rejection	ΔV_{IN} / ΔV_{REF}	V_{IN} = 20 V, e_i = 1 V rms, f = 2400 Hz, T_C = +25°C	01	50		dB
Short circuit current limit	I_{OS} 1/	t ≤ 25 ms, V_{REF} = 0 V, T_C = +125°C	01	-120		mA
		t ≤ 25 ms, V_{REF} = 0 V, T_C = -55°C, +25°C		-190		
Output noise voltage	N_O	10 Hz ≤ f ≤ 10 kHz, T_C = +25°C	01		200	µV rms
Oscillator section						
Maximum frequency	f_{OSC} (MAX)	R_T = 2 kΩ ±0.1 %, C_T = 0.001 µF ±1.0 %	01	250		kHz
Initial frequency Oscillator Frequency	f_{OSC1}	T_C = +25°C	01	47	58	kHz
	f_{OSC2}	T_C = +125°C		45	60	
	f_{OSC3}	T_C = -55°C		45	60	
Frequency change with voltage	Δf_{OSC1} / ΔV_{IN}	8 V ≤ V_{IN} ≤ 40 V, T_C = +25°C	01	-2	2	%

See footnotes at end of table.

TABLE I. Electrical performance characteristics – Continued.

Test	Symbol	Conditions V_{IN} = 20 V dc, R_T = 2 kΩ ±0.1 % C_T = 0.01 µF ±0.1 % -55°C ≤ T_C ≤ +125°C unless otherwise specified	Device type	Limits		Units
				Min	Max	
Oscillator section - continued						
Output amplitude	V_{OSC}		01	2.4		V
Output pulse width	t_{PW}		01	0.3		µs
Ramp voltage	V_{RAMP}		01	3.0	3.8	V
Saturation voltage	V_{SAT} (OSC)	I_{CT} = 5 mA, V_{OSC} = 5 V, T_C = +25°C	01	0.7	1.1	V
Comparator section						
Duty cycle adjust 2/ range	t_{ON} / t_{OSC}	Min value: V_{CM} = 2.5 V, V_{comp} = 0.5 V	01		0.001	%
		Max value: V_{CM} = 2.5 V, V_{comp} = 3.8 V		45	50	
Output section 3/						
Collector leakage current	I_{CEX}	V_C = 40 V	01		10	µA
Saturation voltage	V_{SAT}	$V_{IN}(NI) – V_{IN}(I) \geq$ 150 mV, I_C = 50 mA	01		2.0	V
Emitter output voltage	V_{EO}	$V_{IN}(NI) – V_{IN}(I) \geq$ 150 mV, T_C = +25°C, V_C = 20 V, I_E = -50 mA	01	17		V
Rise time	$t_{R(tr)}$	$V_{IN}(NI) – V_{IN}(I) \geq$ 150 mV, R_C = 2 kΩ, V_C = 20 V, T_C = +25°C, C_L = 15 pF	01		0.4	µs
Fall time	$t_{R(tf)}$	$V_{IN}(NI) – V_{IN}(I) \geq$ 150 mV, R_C = 2 kΩ, V_C = 20 V, T_C = +25°C, C_L = 15 pF	01		0.2	µs

See footnotes at end of table.

TABLE I. Electrical performance characteristics.

Test	Symbol	Conditions V_{IN} = 20 V dc, R_T = 2 kΩ ±0.1 % C_T = 0.01 µF ±0.1 % -55°C ≤ T_C ≤ +125°C unless otherwise specified	Device type	Limits		Units
				Min	Max	
Shutdown circuit section						
Sense voltage	V_{SEN}	$V_{IN}(NI) – V_{IN}(I) \geq 150$ mV, V_{EOA} = 2 V, T_C = +25°C	01	190	210	mV
		$V_{IN}(NI) – V_{IN}(I) \geq 150$ mV, V_{EOA} = 2 V, T_C = -55°C, +125°C		165	235	
Shutdown 4/	V_{SD} (HI)	$V_{IN}(NI) – V_{IN}(I) \geq 150$ mV	01	1.4		V
	V_{SD} (LO)	$V_{IN}(NI) – V_{IN}(I) \geq 150$ mV			0.4	
Total standby current section						
Total standby current	I_{IN}	V_{IN} = 40 V	01		10	mA

See footnotes at end of table.

TABLE I. Electrical performance characteristics – Continued.

Test	Symbol	Conditions V_{IN} = 20 V dc, R_T = 3.6 kΩ ±0.1 %, R_D = 0 kΩ, C_T = 0.01 µF ±0.1 %, -55°C ≤ T_C ≤ +125°C unless otherwise specified	Device type	Limits Min	Limits Max	Units
Reference section						
Output voltage	V_{REF}	T_C = -55°C, +125°C	02, 04	5.0	5.2	V
		T_C = +25°C		5.05	5.15	
Line regulation	V_{RLINE}	V_{IN} = 8 V to 35 V	02, 04	-30	30	mV
Load regulation	V_{RLOAD}	I_{REF} = 0 to –20 mA	02, 04	-50	50	mV
Short circuit current	I_{OS} 1/	V_{REF} = 0 V, t < 25 ms	02, 04	-125		mA
Output noise voltage	N_O	10 Hz ≤ f ≤ 10 kHz	02, 04		200	µV rms
Ripple rejection	ΔV_{IN} / ΔV_{REF}	V_{IN} = 20 V, +1 V rms, f = 2400 Hz, T_C = +25°C	02, 04	50		dB
Oscillator section						
Initial frequency	f_{OSC}	T_C = +25°C	02, 04	37.5	42.5	kHz
Oscillator frequency over temperature	f_{OSC2}	T_C = -55°C, +125°C	02, 04	36	44	kHz
Saturation voltage	V_{SAT} (OSC)	I_{DIS} = 5 mA, V_{OSC} = 5 V, T_C = +25°C	02, 04	0.5	1.1	V
Clock amplitude	V_{OSC}		02, 04	3.0		V
Clock pulse width	t_{PW}	T_C = -55°C, +25°C	02, 04	0.3	1.0	µs
		T_C = +125°C		0.3	1.4	
Ramp voltage	V_{RAMP}		02, 04	3.0	3.6	V
Voltage stability	Δf_{OSC1} / ΔV_{IN}	V_{IN} = 8 V to 35 V, T_C = +25°C	02, 04	-1	1	%
Minimum frequency	f_{OSC} (MIN)	R_T = 150 kΩ ±0.1 %, C_T = 0.1 µF ±1.0 %, R_D = 0 kΩ	02, 04		150	Hz
Maximum frequency	f_{OSC} (MAX)	R_T = 2 kΩ ±0.1 %, C_T = 0.001 µF ±1.0 %, R_D = 0 kΩ	02, 04	300		kHz
Sync 4/	V_{SYNC} (LO)		02, 04		0.8	V
	V_{SYNC} (HI)			2.8		
Sync input current	I_{SYNC}	Sync voltage = 3.5 V	02, 04		2.5	mA

See footnotes at end of table.

TABLE I. Electrical performance characteristics – Continued.

Test	Symbol	Conditions V_{IN} = 20 V dc, R_T = 3.6 kΩ ±0.1 % R_D = 0 kΩ, C_T = 0.01 µF ±0.1 % -55°C ≤ T_C ≤ +125°C unless otherwise specified	Device type	Limits		Units
				Min	Max	
Error amplifier section						
Input offset voltage	V_{IO}		02, 04	-5	5	mV
Input bias current	I_{IB}		02, 04	.01	10	µA
Input offset current	I_{IO}		02, 04	-1	1	µA
Open loop voltage gain	A_{VS}	V_{CM} = 2.5 V	02, 04	60		dB
Common mode rejection	CMR	V_{CM} = 1.5 V to 5.2 V	02, 04	60		dB
Supply voltage rejection ratio	PSRR	V_{IN} = 8 V to 35 V	02, 04	60		dB
Unity gain bandwidth	GBW	A_V = 0 dB, see figure 5, T_C +25°C	02, 04	2		MHz
Output high level	V_{HI}		02, 04	3.8		V
Output low level	V_{LO}		02, 04		0.5	V
P.W.M. comparator section						
Maximum duty cycle	$t_{on}MAX$ / t_{OSC}	V_{COMP} = 3.6 V 2/	02, 04	45	50	%
Minimum duty cycle	$t_{on}MIN$ / t_{OSC}	V_{COMP} = 0.6 V 2/	02, 04		0.001	%
Output section 5/						
Output low	V_{OL}	I_{SINK} = 20 mA	02, 04		0.4	V
		I_{SINK} = 100 mA			2.0	
Output high	V_{OH}	I_{SOURCE} = -20 mA	02, 04	18		V
		I_{SOURCE} = -100 mA		17		
Under voltage lockout	V_{UL}		02, 04	6	8	V
Shutdown delay	t_{SD}	T_C = -55°C, +25°C, V_{SD} = 3 V	02, 04		500	ns
		T_C = +125°C, V_{SD} = 3 V			700	
Rise time	$t_{R(tr)}$		02, 04		600	ns
Fall time	$t_{R(tf)}$		02, 04		300	ns
V_C standby current	I_C	V_C = 35 V	02		200	µA

See footnotes at end of table.

TABLE I. Electrical performance characteristics – Continued.

Test	Symbol	Conditions V_{IN} = 20 V dc, R_T = 3.6 kΩ ±0.1 % R_D = 0 kΩ, C_T = 0.01 µF ±0.1 % -55°C ≤ T_C ≤ +125°C unless otherwise specified	Device type	Limits		Units
				Min	Max	
Soft start section						
Soft start current	I_{SS}	V_{SD} = 0 V	02, 04	-80	-25	µA
Shutdown input current	I_{SD}	V_{SD} = 2.5 V	02, 04		1	mA
Soft start voltage	V_{SS}	V_{SD} = 2 V	02, 04		0.6	V
Shutdown voltage 4/	V_{SD}(LO)		02, 04		0.5	V
	V_{SD}(HI)			1.6		
Total supply current	I_{IN}	T_C = -55°C, +25°C, V_{IN} = 35 V	02, 04		20	mA
		T_C = +125°C, V_{IN} = 35 V			18	

See footnotes at end of table.

TABLE I. Electrical performance characteristics – Continued.

Test	Symbol	Conditions V_{IN} = 15 V dc, R_T = 4.12 kΩ ±0.01 % R_D = 0 kΩ, C_T = 0.01 µF ±0.1 % -55°C ≤ T_C ≤ +125°C unless otherwise specified	Device type	Limits		Units
				Min	Max	
Reference section						
Reference output voltage	V_{REF}		03	4.9	5.1	V
Line regulation	V_{RLINE}	V_{IN} = 8 V to 35 V	03	-20	20	mV
Load regulation	V_{RLOAD}	I_{LOAD} = 0 to –20 mA	03	-30	30	mV
Short circuit current	I_{OS} 1/	V_{REF} = 0 V, t < 25 ms	03	-125		mA
Output noise voltage	N_O	10 Hz ≤ f ≤ 10 kHz, T_C = +25°C	03		200	µV rms
Ripple rejection	ΔV_{IN} / ΔV_{REF}	V_{IN} = 15 V, +1 V rms, T_C = +25°C, sinewave at 2.4 kHz	03	50		dB
Oscillator section 6/						
Initial frequency	f_{OSC}	T_C = +25°C	03	38	42	kHz
Voltage stability	Δf_{OSC} / ΔV_{IN}	8 V ≤ V_{IN} ≤ 35 V	03	-1	1	%
Oscillator frequency	f_{OSC2}	T_C = -55°C, +125°C	03	36	44	kHz
Minimum frequency	f_{OSC} (MIN)	R_T = 150 kΩ ±0.1 %, C_T = 0.20 µF ±1.0 %, R_D = 0 kΩ	03		100	Hz
Maximum frequency	f_{OSC} (MAX)	R_T = 2 kΩ ±0.1 %, C_T = 1.0 nF ±1.0 %, R_D = 0 kΩ	03	350		kHz
Clock width	t_{PW}	T_C = -55°C, +25°C	03		2	µs
		T_C = +125°C			3	
Sawtooth peak voltage	V_{RP}	V_{IN} = 35 V	03	2.5	3.5	V
Sawtooth valley voltage	V_{RV}	V_{IN} = 8 V	03	0.45		V
Error amplifier section						
Input offset voltage	V_{IO}	V_{CM} = 2.5 V	03	-5	5	mV
Input bias current	I_{IB}	V_{CM} = 2.5 V	03	-1		µA
Input offset current	I_{IO}	V_{CM} = 2.5 V	03	-0.5	0.5	µA
Open loop voltage gain	A_{VS}		03	60		dB
Common mode rejection	CMR	V_{CM} = 0 to 5.2 V	03	70		dB

See footnotes at end of table.

TABLE I. Electrical performance characteristics – Continued.

Test	Symbol	Conditions V_{IN} = 15 V dc, R_T = 4.12 kΩ ±0.01 % R_D = 0 kΩ, C_T = 0.01 µF ±0.1 % -55°C ≤ T_C ≤ +125°C unless otherwise specified	Device type	Limits Min	Limits Max	Units
Error amplifier section – continued						
Supply voltage rejection ratio	PSRR	V_{IN} = 8 V to 35 V, V_{CM} = 2.5 V	03	66		dB
Unity gain bandwidth	GBW	A_V = 0 dB, see figure 5, T_C = +25°C	03	2		MHz
Output high level	V_{HI}	$V_{pin1} – V_{pin2}$ ≥ 150 mV, I_{COMP} = -100 µA	03	3.6		V
Output low level	V_{LO}	$V_{pin1} – V_{pin2}$ ≥ 150 mV, I_{COMP} = 100 µA	03		0.4	V
P.W.M. comparator section						
Maximum duty cycle	$t_{on}MAX$ / t_{OSC}	V_{COMP} = 3.6 V 2/	03	45	50	%
Minimum duty cycle	$t_{on}MIN$ / t_{OSC}	V_{COMP} = 0.4 V 2/	03		0.001	%
Output drivers section 7/						
Saturation voltage	$V_{CE(SAT)}$	V_C = 15 V, I_{SINK} = 20 mA	03		0.3	V
		V_C = 15 V, I_{SINK} = 100 mA			2.0	
Output high	V_{OH}	V_C = 15 V, I_{SOURCE} = -20 mA	03	12.5		V
		V_C = 15 V, I_{SOURCE} = -100 mA		12.0		
Shutdown delay	t_{SD}	V_C = 15 V, T_C = -55°C, +25°C	03		0.5	µs
		V_C = 15 V, T_C = +125°C			0.7	
Rise time	$t_{R(tr)}$	V_C = 15 V	03		0.3	µs
Fall time	$t_{R(tf)}$	V_C = 15 V	03		0.2	µs
V_C standby current	I_C	V_C = 35 V	03		150	µA
Digital ports:		$\overline{SYNC}$, $\overline{RESET}$, $\overline{SHUTDOWN}$				
High input current	I_{IH}	V_{IH} = 2.4 V	03	-200		µA
Low input current	I_{IL}	V_{IL} = 0.4 V	03	-360		µA
High output voltage	V_{OHP}	I_{SOURCE} = 40 µA	03	2.4		V
Low output voltage	V_{OLP}	I_{SINK} = 3.6 mA	03		0.4	V
Current limit comparator section						
Sense voltage	V_S		03	80	120	mV
Input bias current	I_{IBS}		03	-10		µA

See footnotes at end of table.

TABLE I. Electrical performance characteristics – Continued.

Test	Symbol	Conditions V_{IN} = 15 V dc, R_T = 4.12 kΩ ±0.01 % R_D = 0 kΩ, C_T = 0.01 µF ±0.1 % -55°C ≤ T_C ≤ +125°C unless otherwise specified	Device type	Limits		Units
				Min	Max	
Soft start section						
Error clamp voltage	V_{EC}		03		0.4	V
Capacitor charging current	I_{CS}		03	-150	-50	µA
Under voltage lockout section						
Reset output (low) voltage	V_R (LO)	V_{REF} = 3.8 V	03		0.4	V
Reset output (high) voltage	V_R (HI)	V_{REF} = 4.8 V	03	2.4		V
Power consumption section						
Standby current	I_{IN}	$\overline{\text{SHUTDOWN}}$ = 0.4 V, V_{IN} = 35 V, T_C = -55°C, +25°C	03		30	mA
		$\overline{\text{SHUTDOWN}}$ = 0.4 V, V_{IN} = 35 V, T_C = +125°C			25	

1/ Continuous short circuit limits will be less than indicated test limits.

2/ t_{OSC} is the period of the output waveform.

3/ Each output transistor shall be tested for all parameters listed.

4/ This is a go-no-go test, the limit values are used for input voltages.

5/ Each output shall be tested for all parameters listed. V_C = 20 V unless otherwise specified.

6/ A 2.7 kΩ pullup resistor is added from the Sync pin to V_{REF} to limit the effects of stray capacitance in automatic test equipment.

7/ Each output shall be tested for all parameters listed V_C = 15 V unless otherwise specified.

8/ Only use the Shutdown pin, not the Sync pin, to deactivate the device.

3.6 Electrical test requirements. Electrical test requirements for each device class shall be the subgroups specified in table II. The electrical tests for each subgroup are described in table III.

3.7 Marking. Marking shall be in accordance with MIL-PRF-38535.

3.8 Microcircuit group assignment. The devices covered by this specification shall be in microcircuit group number 52 (see MIL-PRF-38535, appendix A).

TABLE II. Electrical test requirements.

MIL-PRF-38535 test requirements	Subgroups (see table III)	
	Class S devices	Class B devices
Interim electrical parameters	1	1
Final electrical test parameters	1*, 2, 3, 4, 5, 6	1*, 2, 3, 4, 5, 6
Group A test requirements	1, 2, 3, 4, 5, 6, 7, 9, 10, 11	1, 2, 3, 4, 5, 6, 7, 9, 10,11
Group B electrical test parameters when using the method 5005 QCI option	1, 2, 3, and table IV delta limits	N/A
Group C end-point electrical parameters	1, 2, 3, and table IV delta limits	1 and table IV delta limits
Group D end-point electrical parameters	1, 2, 3	1

*PDA applies to subgroup 1.

4. VERIFICATION.

4.1 Sampling and inspection. Sampling and inspection procedures shall be in accordance with MIL-PRF-38535 or as modified in the device manufacturer's Quality Management (QM) plan. The modification in the QM plan shall not effect the form, fit, or function as described herein.

4.2 Screening. Screening shall be in accordance with MIL-PRF-38535, and shall be conducted on all devices prior to qualification and quality conformance inspection. The following additional criteria shall apply:

a. The burn-in test duration, test condition, and test temperature, or approved alternatives shall be as specified in the device manufacturer's QM plan in accordance with MIL-PRF-38535. The burn-in test circuit shall be maintained under document control by the device manufacturer's Technology Review Board (TRB) in accordance with MIL-PRF-38535 and shall be made available to the acquiring or preparing activity upon request. The test circuit shall specify the inputs, outputs, biases, and power dissipation, as applicable, in accordance with the intent specified in test method 1015 of MIL-STD-883.

b. Interim and final electrical test parameters shall be as specified in table II, except interim electrical parameters test prior to burn-in is optional at the discretion of the manufacturer.

c. Additional screening for space level product shall be as specified in MIL-PRF-38535.

4.3 Qualification inspection. Qualification inspection shall be in accordance with MIL-PRF-38535.

Device types	01	02 and 04	03 and 04
Case outlines	E	E	V
Terminal number	Terminal symbol		
1	INV INPUT	INV INPUT	+ERROR
2	NONINV INPUT	NONINV INPUT	-ERROR
3	OSC OUTPUT	SYNC	COMP
4	+CUR LIM SENSE	OSC OUTPUT	C_{SS}
5	-CUR LIM SENSE	C_T	$\overline{\text{RESET}}$
6	R_T	R_T	-CURRENT SENSE
7	C_T	DISCHARGE	+CURRENT SENSE
8	GND	SOFT START	$\overline{\text{SHUTDOWN}}$
9	COMPENSATION	COMPENSATION	R_T
10	SHUTDOWN	SHUTDOWN	C_T
11	EMITTER A	OUTPUT A	R_D
12	COLLECTOR A	GROUND	$\overline{\text{SYNC}}$
13	COLLECTOR B	V_C	OUTPUT A
14	EMITTER B	OUTPUT B	V_C
15	V_{IN}	V_{IN}	GROUND
16	V_{REF}	V_{REF}	OUTPUT B
17	---	---	V_{IN}
18	---	---	V_{REF}

Figure 1. Terminal connections.

DEVICE TYPE 01

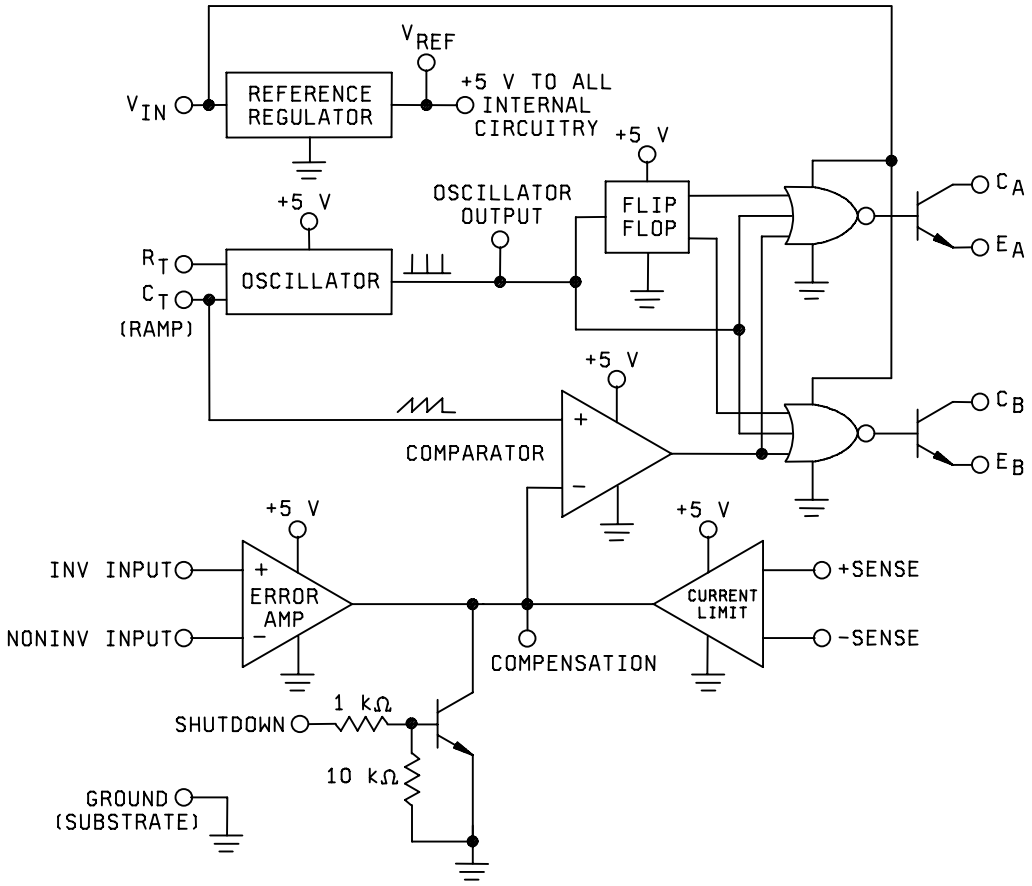

FIGURE 2. Functional block diagram.

DEVICE TYPES 02 AND 04

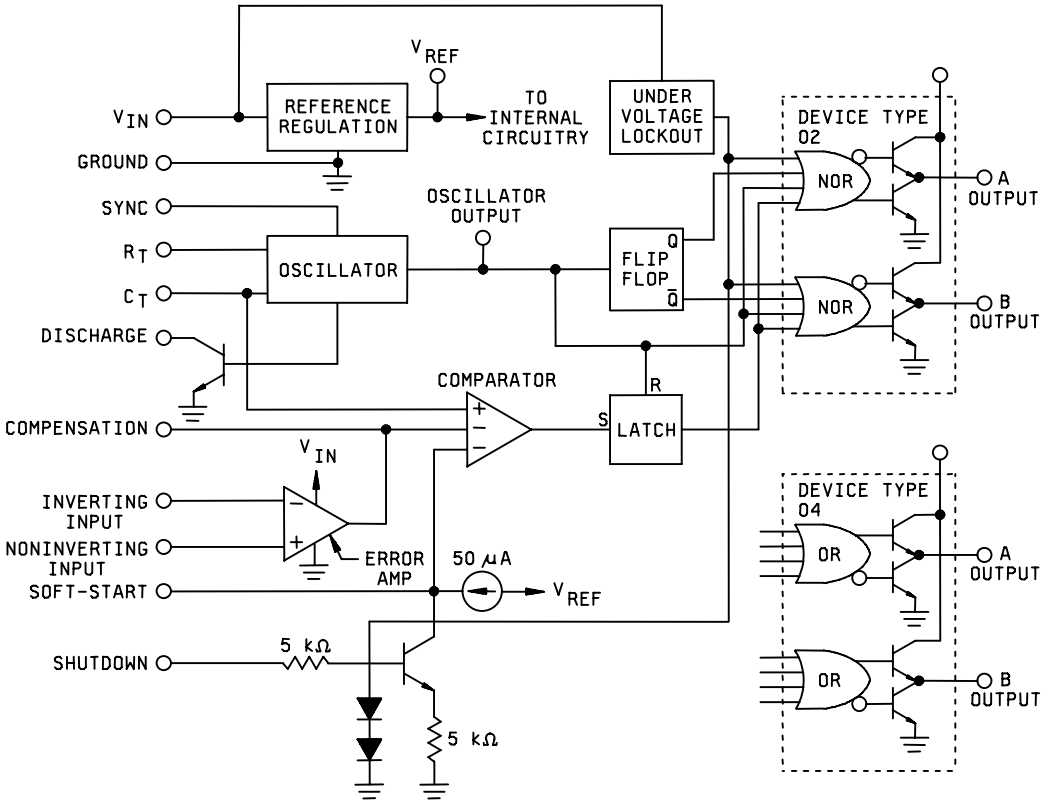

FIGURE 2. Functional block diagram - Continued.

DEVICE TYPE 03

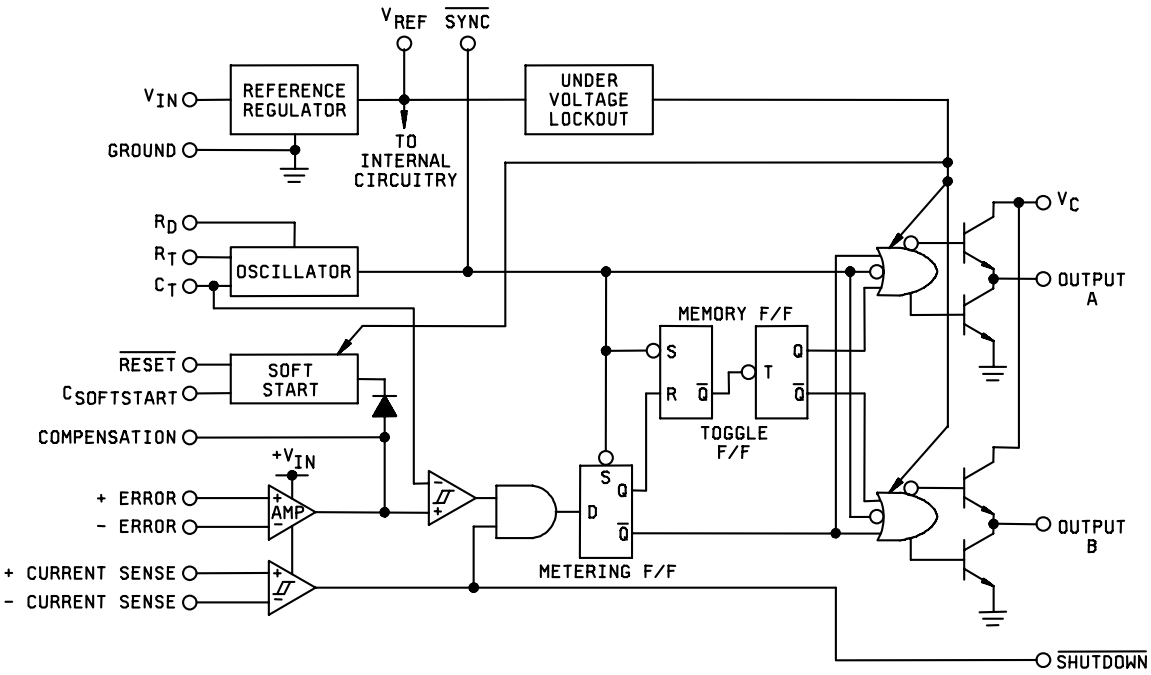

FIGURE 2. Functional block diagram – Continued.

DEVICE TYPE 03

(UNITRODE/TEXAS INSTRUMENTS)

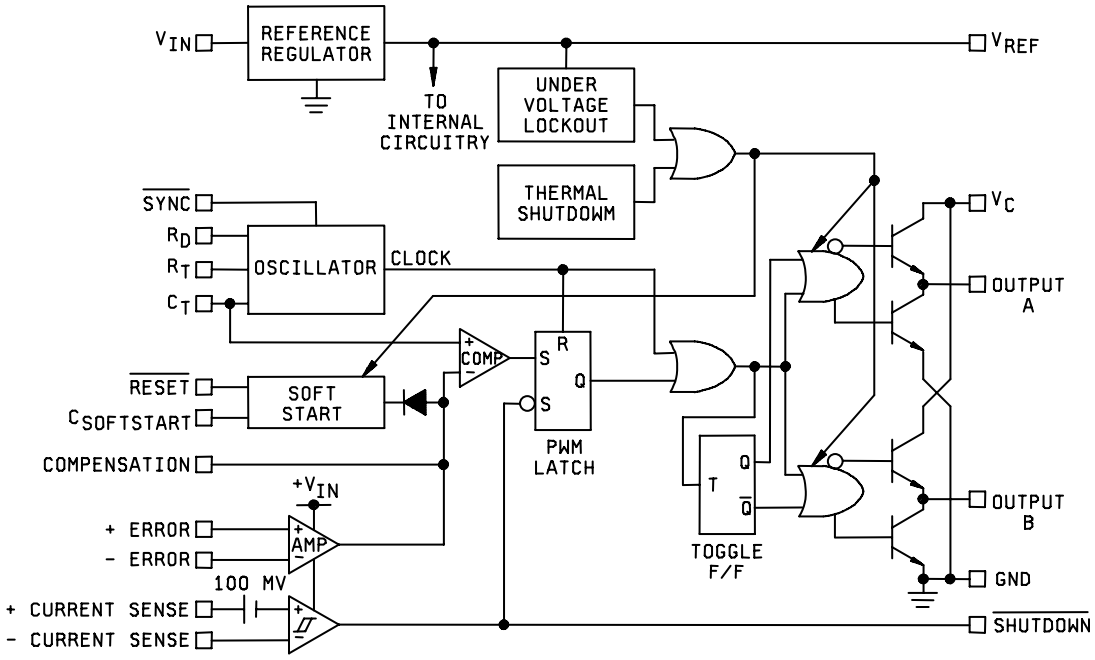

NOTE: The oscillator's $\overline{\text{SYNC}}$ (pin 12) is not connected to the output gates.

FIGURE 2. Functional block diagram – Continued.

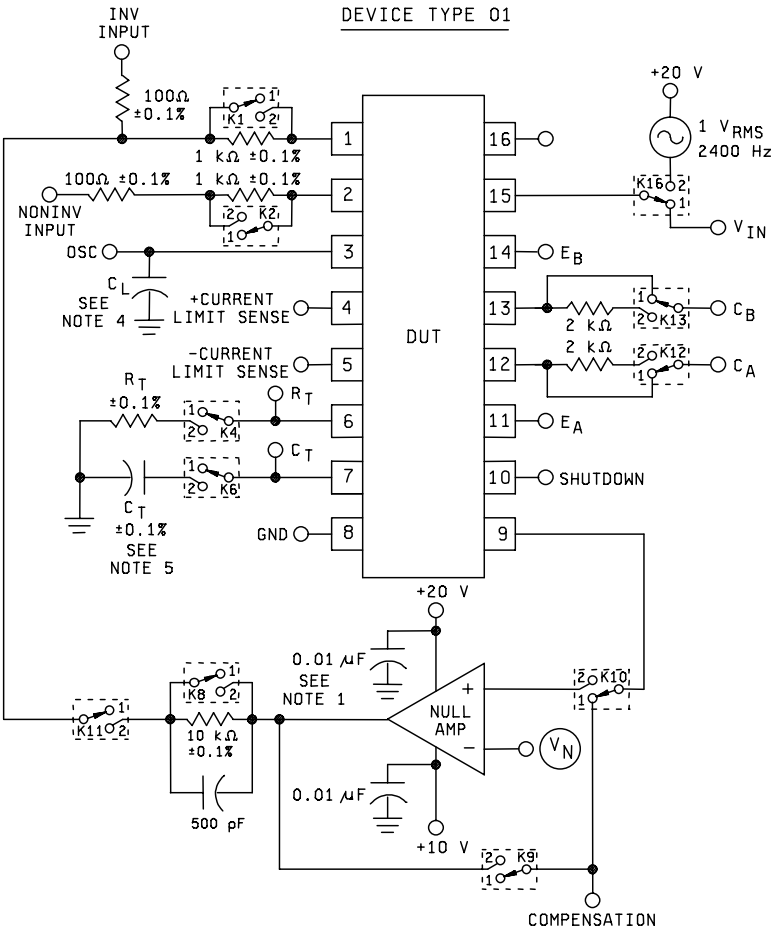

NOTES:

1. Operational amplifier is M38510/13502 or similar.
2. Resistors are ±1 % and capacitors are ±10% unless otherwise specified.
3. V_N = 2.5 V unless otherwise specified in table III.
4. $C_L \leq 20$ pF (including probe and jig capacitance).
5. ±1.0 % for t_{OSC} (max) test.

FIGURE 3. Test circuit for static and dynamic tests.

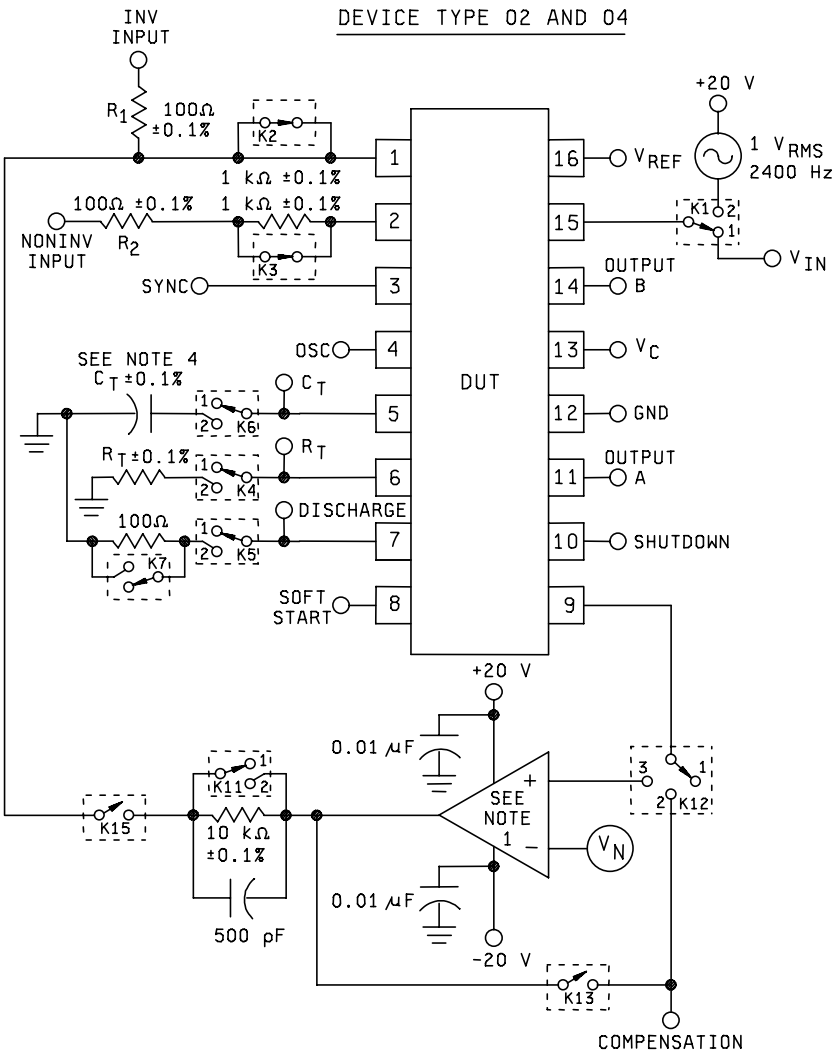

NOTES:

1. Operational amplifier is M38510/13502 or similar.
2. Resistors are ±1 % and capacitors are ±10% unless otherwise specified.
3. V_N = 2.5 V unless otherwise specified in table III.
4. ±1.0 % for f_{OSC} (min) and f_{OSC} (max) test.

FIGURE 3. Test circuit for static and dynamic tests – Continued.

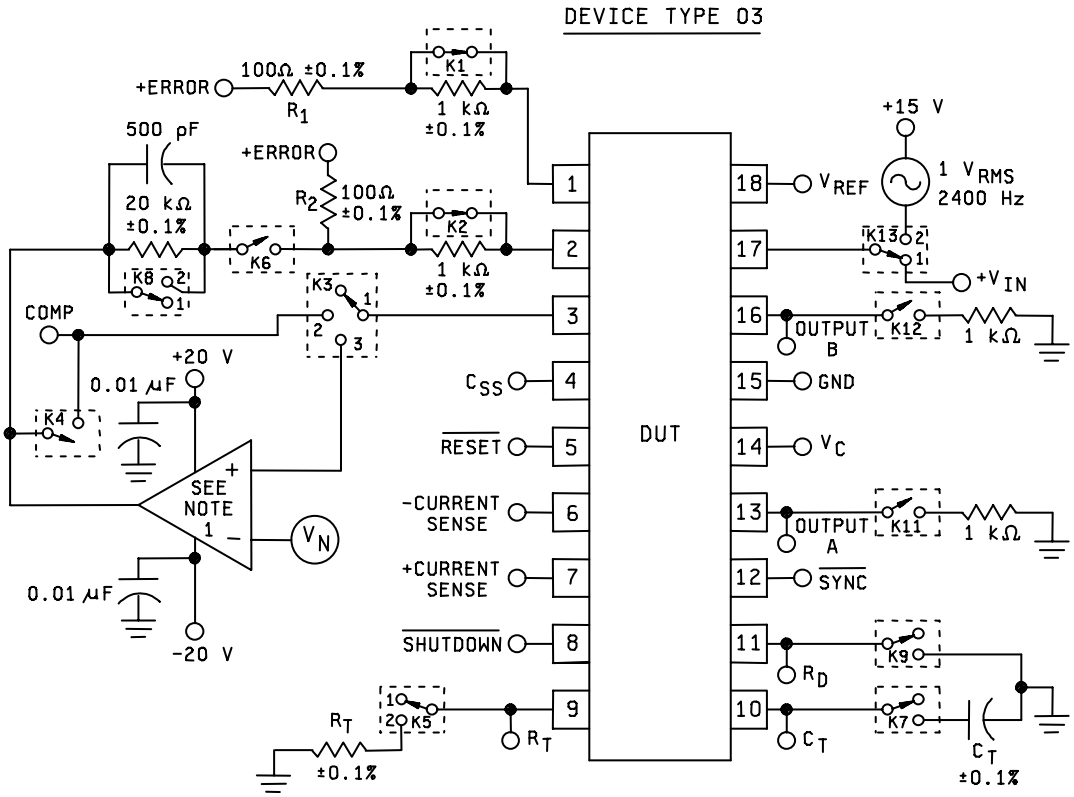

NOTES:

1. Operational amplifier is M38510/13502 or similar.
2. Resistors are ±1 % and capacitors are ±10% unless otherwise specified.
3. V_N = 2.5 V unless otherwise specified in table III.
4. ±1.0 % for f_{OSC} (min) and f_{OSC} (max) test.

FIGURE 3. Test circuit for static and dynamic tests – Continued.

DEVICE TYPE 01

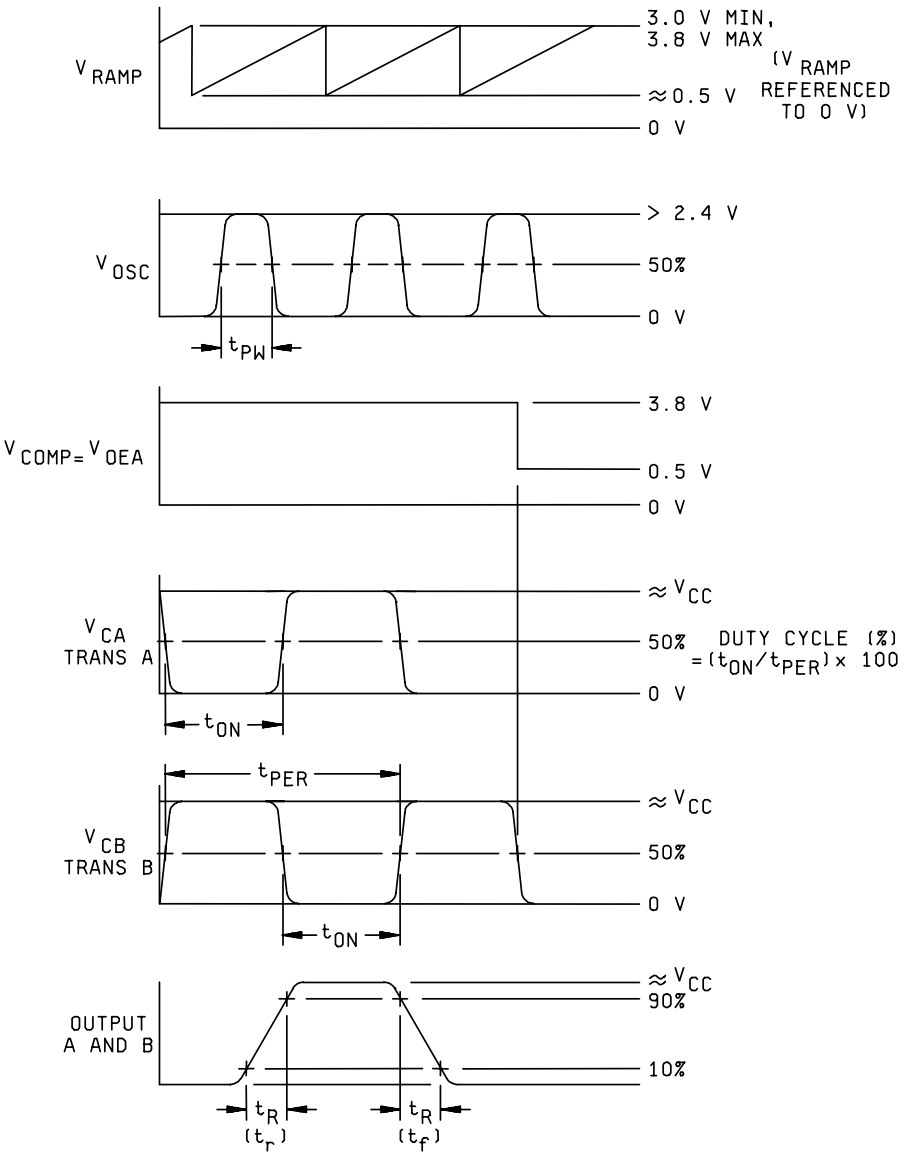

FIGURE 4. Test waveforms.

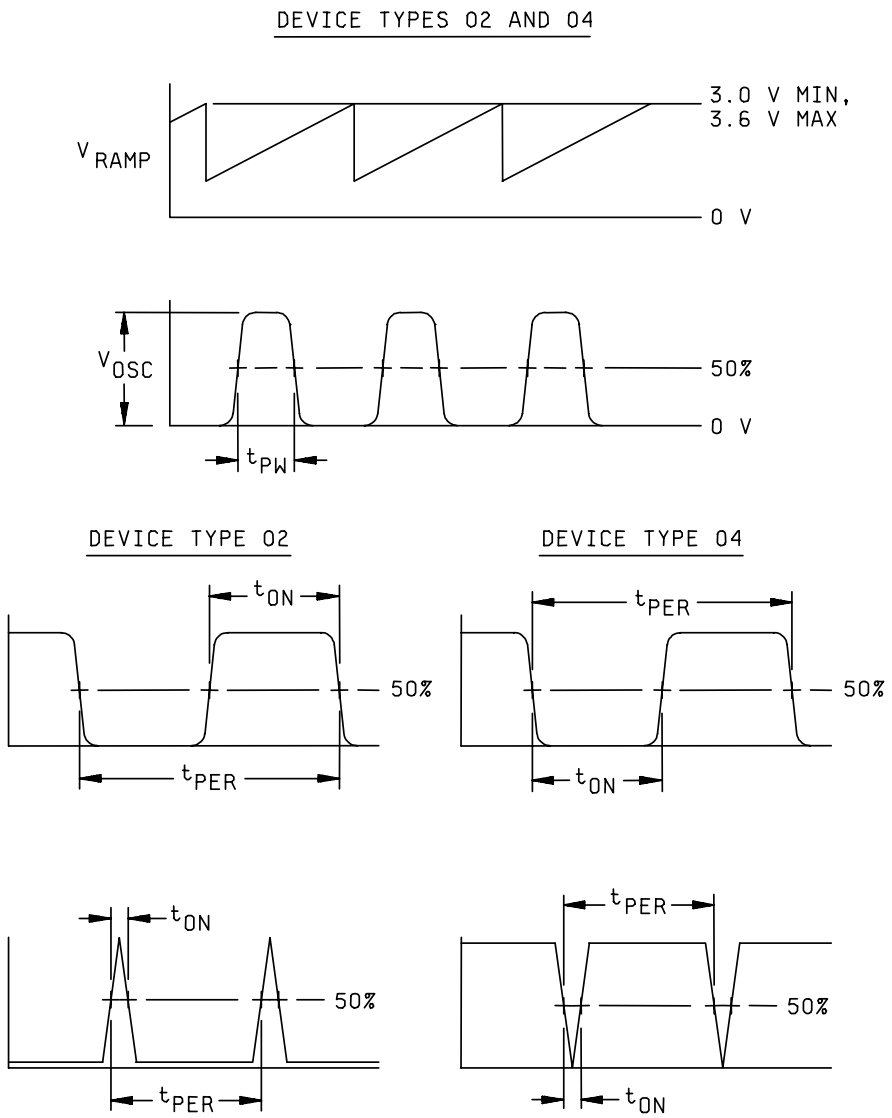

a. Maximum duty cycle

b. Approximate minimum duty cycle (actual = 0%). Duty cycle (%) = (t_{ON} / t_{PER}) x 100.

FIGURE 4. Test waveforms – Continued.

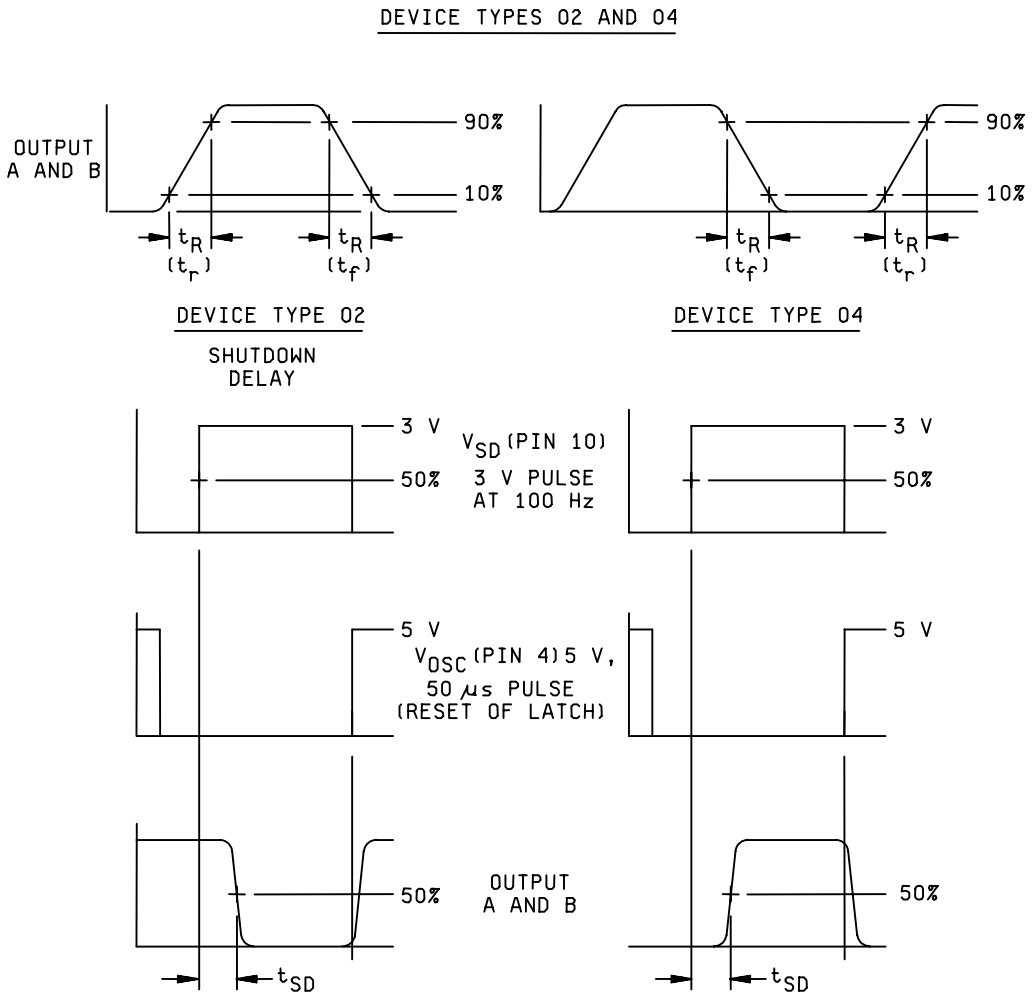

FIGURE 4. Test waveforms – Continued.

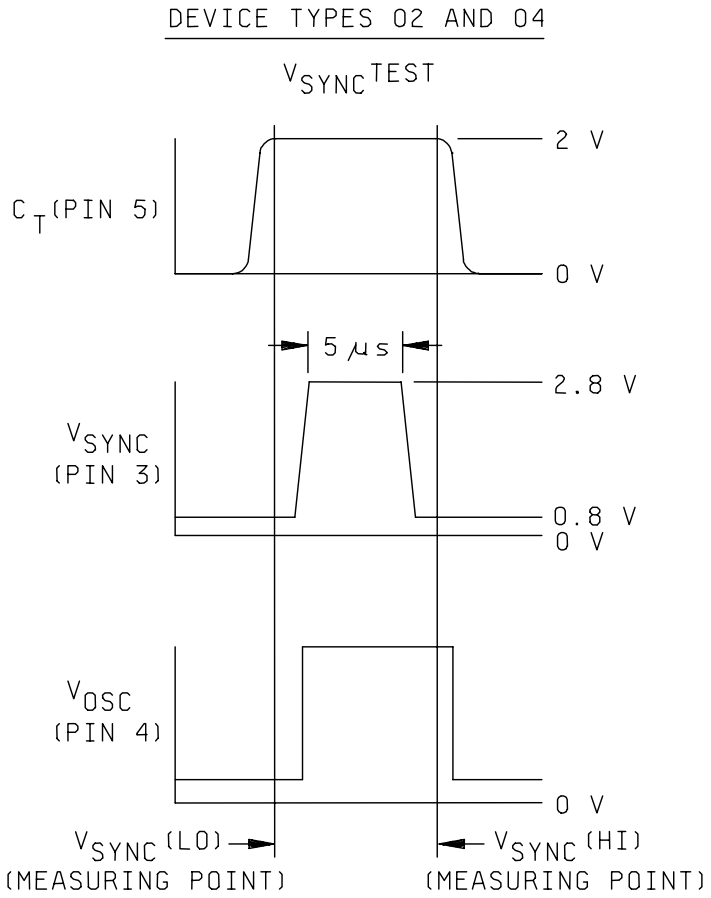

FIGURE 4. Test waveforms – Continued.

DEVICE TYPE 03

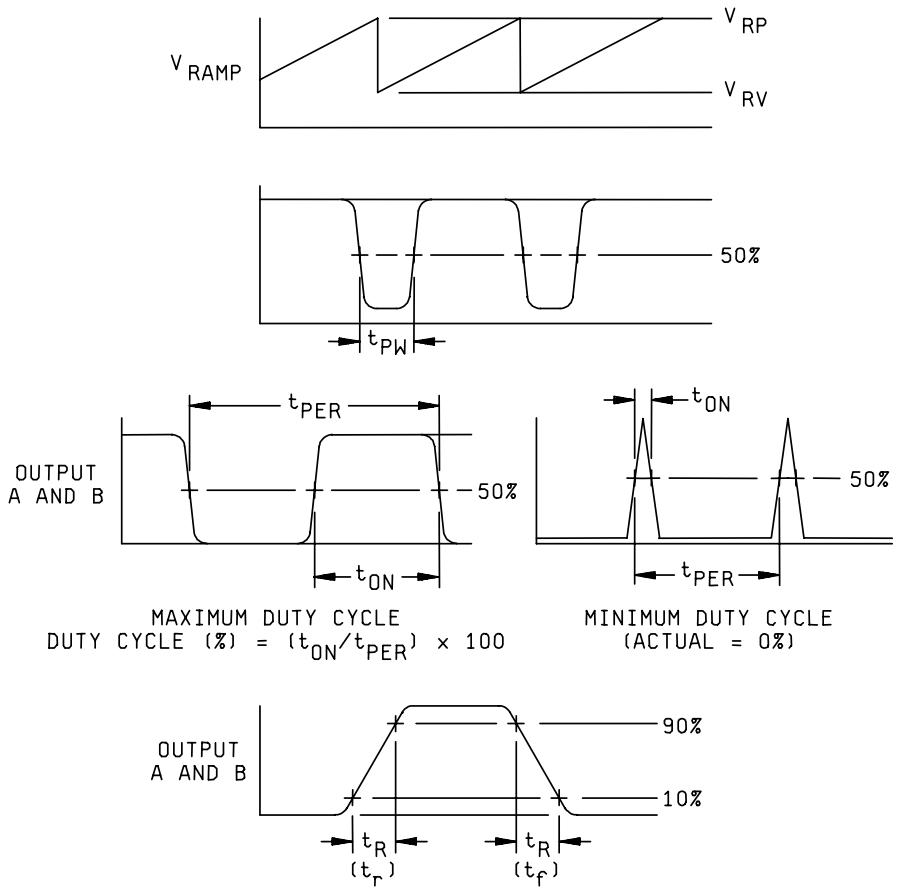

FIGURE 4. Test waveforms – Continued.

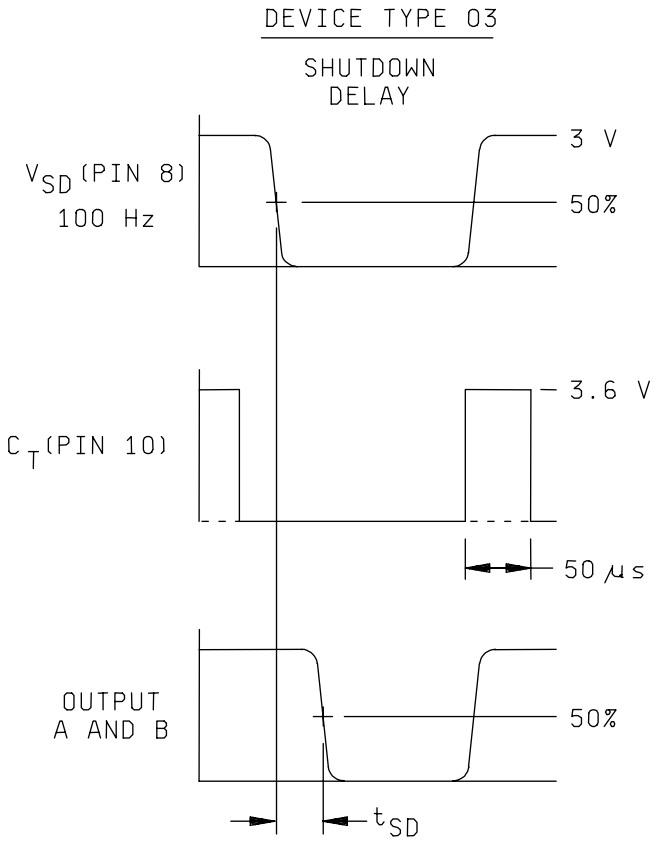

FIGURE 4. Test waveforms – Continued.

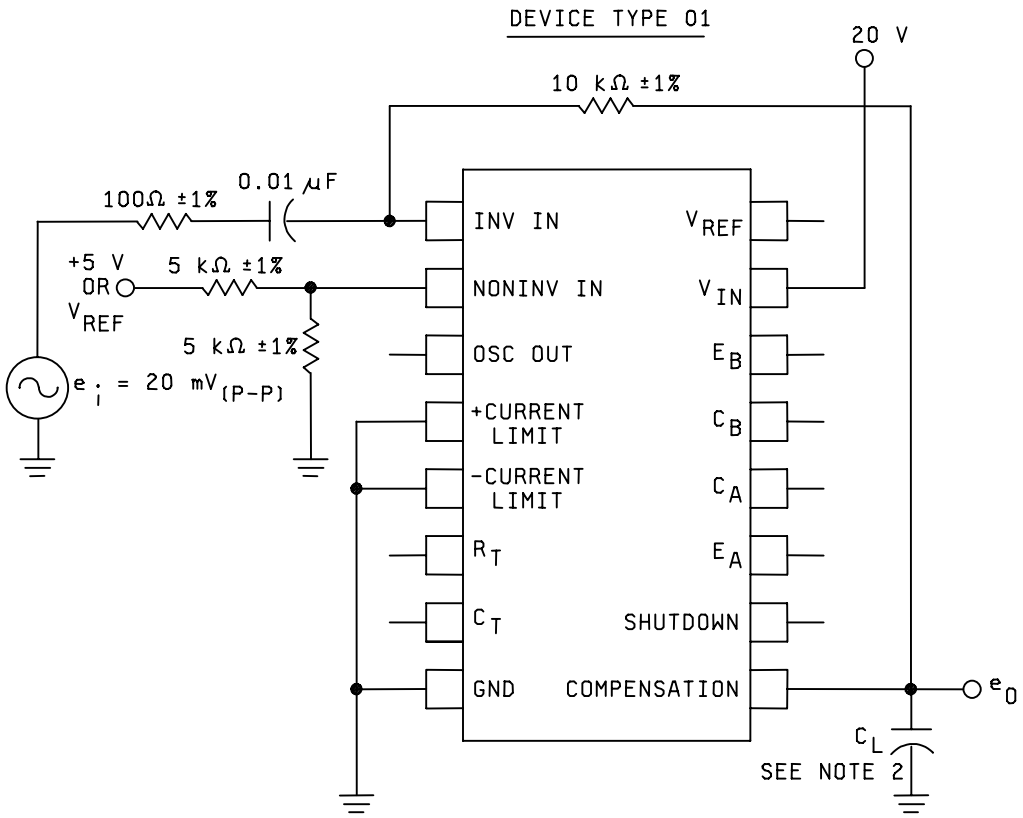

NOTES:

1. G_{BW} is measured by increasing signal frequency (starting at 100 kHz) until e_O = 20 $mV_{(P-P)}$. The frequency at which this occurs is G_{BW}.
2. (C_L) capacitance load = 20 pF, -10%, on e_O including scope probe and jig capacitance.
3. Alternative method: Set signal frequency (e_i) to the G_{BW} minimum limit if $e_O \geq$ 20 $mV_{(P-P)}$ then G_{BW} is $\geq$ the minimum limit.

FIGURE 5. Unity gain bandwidth test circuit.

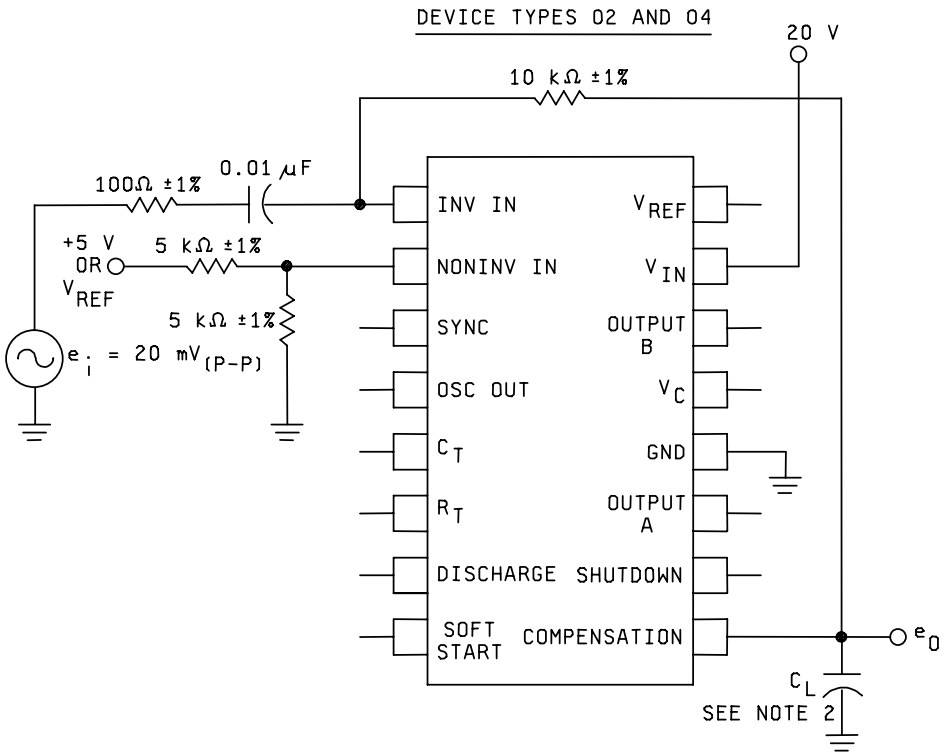

NOTES:

1. G_{BW} is measured by increasing signal frequency (starting at 100 kHz) until e_O = 20 $mV_{(P-P)}$. The frequency at which this occurs is G_{BW}.
2. (C_L) capacitance load = 20 pF, -10%, on e_O including scope probe and jig capacitance.
3. Alternative method: Set signal frequency (e_i) to the G_{BW} minimum limit if $e_O \geq 20$ $mV_{(P-P)}$ then G_{BW} is ≥ the minimum limit.

FIGURE 5. Unity gain bandwidth test circuit – Continued.

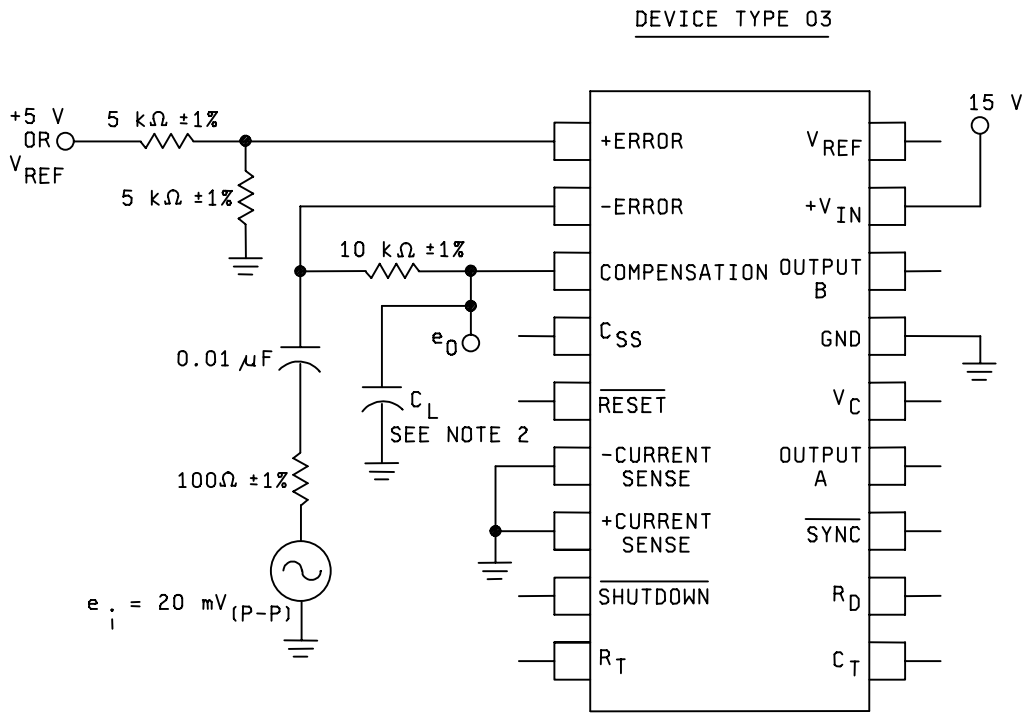

NOTES:

1. G_{BW} is measured by increasing signal frequency (starting at 100 kHz) until e_O = 20 $mV_{(P-P)}$. The frequency at which this occurs is G_{BW}.
2. (C_L) capacitance load = 20 pF, -10%, on e_O including scope probe and jig capacitance.
3. Alternative method: Set signal frequency (e_i) to the G_{BW} minimum limit if $e_O \geq 20$ $mV_{(P-P)}$ then G_{BW} is ≥ the minimum limit.

FIGURE 5. Unity gain bandwidth test circuit – Continued.

TABLE III. Group A inspection for device type 01.

Subgroup	Symbol	Test no.	Adapter pin numbers															
			1	2	3	4	5	6	7	8	9	10	11	12	13	14	15	16
			INV INPUT	NONINV INPUT	OSC	+CL	-CL	R_T	C_T	GND	COMP	SHUT DOWN	E_A	C_A	C_B	E_B	V_{IN}	V_{REF}
1 Tc = +25°C	V_{IO}	1	2.5 V	2.5 V		GND	GND			GND							20 V	
	$+I_{IB}$	2	"	"		"	"			"							"	
	$-I_{IB}$	3	"	"		"	"			"							"	
	I_{COS1}	4	2.575 V	2.425 V		"	"			"	I_1 to 2.5 V						"	
	I_{COS2}	5	2.425 V	2.575 V		"	"			"	I_2 to 2.5 V						"	
	I_{IO}	6																
	CMR	7	1.8 V	1.8 V		GND	GND			GND							20 V	
			3.4 V	3.4 V		"	"			"							"	
	V_{REF}	8	2.5 V	2.5 V		"	"			"							"	
	V_{RLINE}	9	"	"		"	"			"							8 V	
			"	"		"	"			"							40 V	
	V_{RLOAD}	10	"	"		"	"			"							20 V	-20 mA
	I_{OS}	11	"	"		"	"			"							"	0 V
	V_{SAT} (OSC)	12	"	"	5 V	"	"		5 mA	"							"	
	$I_{CEX(A)}$	13	"	"		"	"			"		1.4 V	GND	40 V			"	
	$I_{CEX(B)}$	14	"	"		"	"			"		1.4 V			40 V	GND	"	
	$V_{SAT(A)}$	15	2.425 V	2.575 V	1/	"	"			"			GND	50 mA			"	
	$V_{SAT(B)}$	16	"	"	"	"	"			"					50 mA	GND	"	
	$V_{EO(A)}$	17	"	"	"	"	"			"			-50 mA	20 V			"	
	$V_{EO(B)}$	18	"	"	"	"	"			"					20 V	-50 mA	"	
	I_{IN}	19	2.5 V	2.5 V		"	"			"							40 V	
2 Tc = +125°C	V_{IO}	20	2.5 V	2.5 V		GND	GND			GND							20 V	
	$+I_{IB}$	21	"	"		"	"			"							"	
	$-I_{IB}$	22	"	"		"	"			"							"	
	I_{IO}	23																
	CMR	24	1.8 V	1.8 V		GND	GND			GND							20 V	
			3.4 V	3.4 V		"	"			"							"	
	V_{REF}	25	2.5 V	2.5 V		"	"			"							"	
	V_{RLINE}	26	"	"		"	"			"							8 V	
			"	"		"	"			"							40 V	
	V_{RLOAD}	27	"	"		"	"			"							20 V	-20 mA
	I_{OS}	28	"	"		"	"			"							"	0 V
	$I_{CEX(A)}$	29	"	"		"	"			"		1.4 V	GND	40 V			"	
	$I_{CEX(B)}$	30	"	"		"	"			"		1.4 V			40 V	GND	"	
	$V_{SAT(A)}$	31	2.425 V	2.575 V	1/	"	"			"			GND	50 mA			"	
	$V_{SAT(B)}$	32	"	"	"	"	"			"					50 mA	GND	"	
	I_{IN}	33	2.5 V	2.5 V		"	"			"							40 V	
3 Tc = -55°C		34 to 47	All test parameters, test conditions, equations, and test limits are identical with those specified in table III, subgroup 2, T_C = +125°C. Except for I_{OS} at –55°C. The minimum limit is –190 mA.															

See footnote at end of table.

TABLE III. Group A inspection for device type 01 – Continued.

Subgroup	Symbol	Test no.	Energized relays				Equations and notes	Limits		Unit
				No.	Value	Unit		Min	Max	
1 Tc = +25°C	V_{IO}	1	K1, K2, K9, K10, K11	9	E1	V	V_{IO} = (E1 – 2.5 V) / 101	-5	5	mV
	$+I_{IB}$	2	K1, K9, K10, K11	9	E2	"	$+I_{IB}$ = (E1 – E2) / 101000	0.01	10	µA
	$-I_{IB}$	3	K2, K9, K10, K11	9	E3	"	$-I_{IB}$ = (E3 – E1) / 101000	0.01	10	µA
	I_{COS1}	4		9	I1	µA	I_{COS1} = I1	65	170	µA
	I_{COS2}	5		9	I2	"	I_{COS2} = I2	-170	-65	µA
	I_{IO}	6					I_{IO} = ($+I_{IB}$) – ($-I_{IB}$)	-1	1	µA
	CMR	7	K1, K2, K9, K10, K11	9	E4	V	CMR = 20 log [(3.4 – 1.8) 101 / (E5 – E4 – 1.6)]	70		dB
				9	E5	"				
	V_{REF}	8		16	E6	"	V_{REF} = E6	4.8	5.2	V
	V_{RLINE}	9		"	E7	"	V_{RLINE} = E8 – E7	-20	20	mV
				"	E8	"				
	V_{RLOAD}	10		"	E9	"	V_{RLOAD} = E9 – E6	-50	50	mV
	I_{OS}	11		"	I3	mA	I_{OS} = I3	-190		mA
	V_{SAT} (OSC)	12		7	E10	V	$V_{SAT(OSC)}$ = E10	0.7	1.1	V
	$I_{CEX(A)}$	13		12	14	µA	$I_{CEX(A)}$ = I4		10	µA
	$I_{CEX(B)}$	14		13	15	µA	$I_{CEX(B)}$ = I5		10	µA
	$V_{SAT(A)}$	15		12	E11	V	$V_{SAT(A)}$ = E11		2.0	V
	$V_{SAT(B)}$	16		13	E12	"	$V_{SAT(B)}$ = E12		2.0	V
	$V_{EO(A)}$	17		11	E13	"	$V_{EO(A)}$ = E13	17		V
	$V_{EO(B)}$	18		14	E14	"	$V_{EO(B)}$ = E14	17		V
	I_{IN}	19		15	I6	mA	I_{IN} = I6		10	mA
2 Tc = +125°C	V_{IO}	20	K1, K2, K9, K10, K11	9	E15	V	V_{IO} = (E15 – 2.5 V) / 101	-5	5	mV
	$+I_{IB}$	21	K1, K9, K10, K11	9	E16	"	$+I_{IB}$ = (E15 – E16) / 101000	0.01	10	µA
	$-I_{IB}$	22	K2, K9, K10, K11	9	E17	"	$-I_{IB}$ = (E17 – E15) / 101000	0.01	10	µA
	I_{IO}	23					I_{IO} = ($+I_{IB}$) – ($-I_{IB}$)	-1	1	µA
	CMR	24	K1, K2, K9, K10, K11	9	E18	V	CMR = 20 log [(3.4 – 1.8) 101 / (E19 – E18 – 1.6)]	70		dB
				9	E19	"				
	V_{REF}	25		16	E20	"	V_{REF} = E20	4.8	5.2	V
	V_{RLINE}	26		"	E21	"	V_{RLINE} = E22 – E21	-20	20	mV
				"	E22	"				
	V_{RLOAD}	27		"	E23	"	V_{RLOAD} = E23 – E20	-50	50	mV
	I_{OS}	28		"	I7	mA	I_{OS} = I7	-120		mA
	$I_{CEX(A)}$	29		12	I8	µA	$I_{CEX(A)}$ = I8		10	µA
	$I_{CEX(B)}$	30		13	I9	µA	$I_{CEX(B)}$ = I9		10	µA
	$V_{SAT(A)}$	31		12	E24	V	$V_{SAT(A)}$ = E24		2.0	V
	$V_{SAT(B)}$	32		13	E25	"	$V_{SAT(B)}$ = E25		2.0	V
	I_{IN}	33		15	I10	mA	I_{IN} = I10		10	mA
3 Tc = -55°C		34 to 47								

See footnotes at end of table.

TABLE III. Group A inspection for device type 01 – Continued.

Subgroup	Symbol	Test no.	Adapter pin numbers															
			1	2	3	4	5	6	7	8	9	10	11	12	13	14	15	16
			INV INPUT	NONINV INPUT	OSC	+CL	-CL	R_T	C_T	GND	COMP	SHUT DOWN	E_A	C_A	C_B	E_B	V_{IN}	V_{REF}
4	A_{VS}	48	2.5 V	2.5 V		GND	GND			GND							20 V	
Tc =			"	"		"	"			"							20 V	
+25°C	ΔV_{IN} / ΔV_{REF}	49	"	"						"							20 V + 1 V rms	
	$f_{OSC\ (MAX)}$	50	"	"		GND	GND	2 kΩ	.001 µF	"							20 V	
	f_{OSC1}	51	"	"		"	"	"	3/	"							20 V	
	Δf_{OSC1} / ΔV_{IN}	52	"	"		"	"	"	.01 µF	"							8 V	
			"	"		"	"	"	"	"							40 V	
	V_{OSC}	53	2.5 V	2.5 V		"	"	"	"	"							20 V	
	V_{RAMP}	54	"	"		"	"	"	"	"							20 V	
	V_{SEN}	55	2.425 V	2.575 V			"	"	"	"							20 V	
	$V_{SD(HI)}$	56	"	"		GND	"		"	"		1.4 V	GND			GND	20 V	
	$V_{SD(LO)}$	57	"	"		"	"		"	"		0.4 V	"			"	"	
5	A_{VS}	58	2.5 V	2.5 V		GND	GND			GND							20 V	
Tc =			"	"		"	"			"							20 V	
+125°C	$f_{OSC\ (MAX)}$	59	"	"		GND	GND	2 kΩ	.001 µF	"							20 V	
	f_{OSC2}	60	"	"		"	"	"	3/	"							20 V	
	V_{OSC}	61	2.5 V	2.5 V		"	"	"	.01 µF	"							20 V	
	V_{RAMP}	62	"	"		"	"	"	"	"							20 V	
	V_{SEN}	63	2.425 V	2.575 V			"	"	"	"							20 V	
	$V_{SD(HI)}$	64	"	"		GND	"		"	"		1.4 V	GND			GND	20 V	
	$V_{SD(LO)}$	65	"	"		"	"		"	"		0.4 V	"			"	20 V	
6		66 to	All test parameters, test conditions, equations, and test limits are identical with those specified in table III, subgroup 5, T_C = +125°C.															
Tc = -55°C		73																
7	G_{BW}	74																
Tc = +25°C	N_O	75	2.5 V	2.5 V		GND	GND			GND							20 V	
9	t_{PW}	76	2.5 V	2.5 V		GND	GND	2 kΩ	.01 µF	"			GND	20 V	20 V	GND	20 V	
Tc = +25°C	$t_{ON(A)MAX}$ / t_{OSC}	77	V_{CM} = 2.5 V			"	"	"	"	"	3.8 V		"	"	"	"	"	
	$t_{ON(A)MIN}$ / t_{OSC}	78	"			"	"	"	"	"	0.5 V		"	"	"	"	"	
	$t_{ON(B)MAX}$ / t_{OSC}	79	"			"	"	"	"	"	3.8 V		"	"	"	"	"	
	$t_{ON(B)MIN}$ / t_{OSC}	80	"			"	"	"	"	"	0.5 V		"	"	"	"	"	
	$t_{R(tr)A}$	81	2.425 V	2.575 V		"	"	"	"	"			"	"	"	"	"	
	$t_{R(tf)A}$	82	"	"		"	"	"	"	"			"	"	"	"	"	
	$t_{R(tr)B}$	83	"	"		"	"	"	"	"			"	"	"	"	"	
	$t_{R(tf)B}$	84	"	"		"	"	"	"	"			"	"	"	"	"	

See footnotes at end of table.

TABLE III. Group A inspection for device type 01 – Continued.

Subgroup	Symbol	Test no.	Energized relays				Equations and notes	Limits		Unit
				No.	Value	Unit		Min	Max	
4 Tc = +25°C	A_{VS}	48	K1, K2, K9, K10, K11	9	E37	V	A_{VS} = 20 Log [ΔV_N (101) / (E37 – E38)] 2/	72		dB
			K1, K2, K9, K10, K11	9	E38	"				
	ΔV_{IN} / ΔV_{REF}	49	K16	16	E39	V rms	ΔV_{IN} / ΔV_{REF} = 20 Log (1 V rms / E39 rms)	50		dB
	$f_{OSC\ (MAX)}$	50	K4, K6	3	f1	kHz	$f_{OSC(MAX)}$ = f1	250		kHz
	f_{OSC1}	51	"	"	f2	"	f_{OSC1} = f2	47	58	kHz
	Δf_{OSC1} / ΔV_{IN}	52	"	"	f3	"	Δf_{OSC1} / ΔV_{IN} = 100 (f3 – f4) / f3	-2	2	%
			"	"	f4	"				
	V_{OSC}	53	"	"	E40	"	V_{OSC} = E40	2.4		V
	V_{RAMP}	54	"	7	E41	"	V_{RAMP} = E41	3.0	3.8	V
	V_{SEN}	55		4	E42	"	V_{SEN} = E42 4/	190	210	mV
	$V_{SD(HI)}$	56	K6	9	E43	"	$V_{SD(HI)} \geq 1.4$ V if E43 ≤ limit		0.5	V
	$V_{SD(LO)}$	57	K6	"	E44	mA	$V_{SD(LO)} \leq 0.4$ V if E44 ≥ limit	3.6		V
5 Tc = +125°C	A_{VS}	58	K1, K2, K9, K10, K11	9	E45	V	A_{VS} = 20 Log [ΔV_N (101) / (E45 – E46)] 2/	68		dB
			K1, K2, K9, K10, K11	9	E46	"				
	$f_{OSC\ (MAX)}$	59	K4, K6	3	f5	kHz	$f_{OSC(MAX)}$ = f5	250		kHz
	f_{OSC2}	60	"	"	f6	"	f_{OSC2} = f6	45	60	kHz
	V_{OSC}	61	"	"	E47	V	V_{OSC} = E47	2.4		V
	V_{RAMP}	62	"	7	E48	V	V_{RAMP} = E48	3.0	3.8	V
	V_{SEN}	63		4	E49	V	V_{SEN} = E49 4/	165	235	mV
	$V_{SD(HI)}$	64	K6	9	E50	V	$V_{SD(HI)} \geq 1.4$ V if E50 ≤ limit		0.5	V
	$V_{SD(LO)}$	65	K6	"	E51	V	$V_{SD(LO)} \leq 0.4$ V if E51 ≥ limit	3.6		V
6 Tc = -55°C		66 to 73								
7 Tc = +25°C	G_{BW}	74					See figure 5	2		MHz
	N_O	75		I6	E59	µV rms	N_O = E59		200	µV rms
9 Tc = +25°C	t_{PW}	76	K4, K6, K12, K13	3	t1	µs	t_{PW} = t1 5/	0.3		µs
	$t_{ON(A)MAX}$ / t_{OSC}	77	"	12	t2, tper	"	$t_{ON(A)}$ MAX / t_{OSC} = t2 / tper x 100 5/	45	50	%
	$t_{ON(A)MIN}$ / t_{OSC}	78	"	12	t3, tper	"	$t_{ON(A)}$ MIN / t_{OSC} = t3 / tper x 100 5/		0.001	%
	$t_{ON(B)MAX}$ / t_{OSC}	79	"	13	t4, tper	"	$t_{ON(B)}$ MAX / t_{OSC} = t4 / tper x 100 5/	45	50	%
	$t_{ON(B)MIN}$ / t_{OSC}	80	"	13	t5, tper	"	$t_{ON(B)}$ MIN / t_{OSC} = t5 / tper x 100 5/		0.001	%
	$t_{R(tr)A}$	81	"	12	t6	"	$t_{R(tr)A}$ = t6 5/		0.4	µs
	$t_{R(tf)A}$	82	"	12	t7	"	$t_{R(tf)A}$ = t7 5/		0.2	"
	$t_{R(tr)B}$	83	"	13	t8	"	$t_{R(tr)B}$ = t8 5/		0.4	"
	$t_{R(tf)B}$	84	"	13	t9	"	$t_{R(tf)B}$ = t9 5/		0.2	"

See footnotes at end of table.

TABLE III. Group A inspection for device type 01 – Continued.

Subgroup	Symbol	Test no.	Adapter pin numbers															
			1	2	3	4	5	6	7	8	9	10	11	12	13	14	15	16
			INV INPUT	NONINV INPUT	OSC	$+C_L$	$-C_L$	R_T	C_T	GND	COMP	SHUT DOWN	E_A	C_A	C_B	E_B	V_{IN}	V_{REF}
10 Tc = +125°C	t_{PW}	85	2.5 V	2.5 V		GND	GND	2 kΩ	.01 µF	GND			GND	20 V	20 V	GND	20 V	
	$t_{ON(A)MAX}$ / t_{OSC}	86	V_{CM}	= 2.5 V		"	"	"	"	"	3.8 V		"	"	"	"	"	
	$t_{ON(A)MIN}$ / t_{OSC}	87	"			"	"	"	"	"	0.5 V		"	"	"	"	"	
	$t_{ON(B)MAX}$ / t_{OSC}	88	"			"	"	"	"	"	3.8 V		"	"	"	"	"	
	$t_{ON(B)MIN}$ / t_{OSC}	89	"			"	"	"	"	"	0.5 V		"	"	"	"	"	
11 Tc = -55°C		90 to 94	All test parameters, test conditions, equations, and test limits are identical with those specified in table III, subgroup 10, T_C = +125°C.															

1/ V_{OSC} = 5 V, 50 µs pulse. Pulse V_{OSC} to switch output transistor (which is on).

2/ Measure V_{COMP} with V_N = 1.8 V and V_N = 3.4 V.

3/ The capacitor shall be polystyrene 0.01 µF tuned with a mica capacitor to ±0.1 %.

4/ Adjust V +C.L. sense until V_{COMP} = 2 V.

5/ See figure 4.

TABLE III. Group A inspection for device type 01 – Continued.

Subgroup	Symbol	Test no.	Energized relays				Equations and notes	Limits		Unit
				No.	Value	Unit		Min	Max	
10 Tc = +125°C	t_{PW}	85	K4, K6, K12, K13	3	t10	µs	t_{PW} = t10 5/	0.3		µs
	$t_{ON(A)MAX}$ / t_{OSC}	86	"		t11, tper	"	$t_{ON(A)}$ MAX / t_{OSC} = t11 / tper x 100 5/	45	50	%
	$t_{ON(A)MIN}$ / t_{OSC}	87	"		t12, tper	"	$t_{ON(A)}$ MIN / t_{OSC} = t12 / tper x 100 5/		0.001	%
	$t_{ON(B)MAX}$ / t_{OSC}	88	"		t13, tper	"	$t_{ON(B)}$ MAX / t_{OSC} = t13 / tper x 100 5/	45	50	%
	$t_{ON(B)MIN}$ / t_{OSC}	89	"		t14, tper	"	$t_{ON(B)}$ MIN / t_{OSC} = t14 / tper x 100 5/		0.001	%
11 Tc = -55°C		90 to 94								

TABLE III. Group A inspection for device types 02 and 04.

Subgroup	Symbol	Test no.	Adapter pin numbers															
			1	2	3	4	5	6	7	8	9	10	11	12	13	14	15	16
			(-) INPUT	(+) INPUT	Sync	OSC	C_T	R_T	DIS-CHG	SS	COMP	SHUT-DOWN	O/P A	GND	V_C	O/P B	V_{IN}	V_{REF}
1 Tc = +25°C	V_{REF}	1	2.5 V	2.5 V										GND			20 V	
	V_{RLINE}	2	"	"										"			8 V	
			"	"										"			35 V	
	V_{RLOAD}	3	"	"										"			20 V	-20 mA
	I_{OS}	4	"	"										"			20 V	0 V
	I_C	5	"	"								1.6 V		"	35 V		30 V	
	$V_{OL(A)}$	6	GND	V_{REF}		2/							20 mA	"	20 V		20 V	
	$V_{OL(A)}$	7	"	"		"							100 mA	"	"		"	
	$V_{OL(B)}$	8	"	"		"								"	"	20 mA	"	
	$V_{OL(B)}$	9	"	"		"								"	"	100 mA	"	
	$V_{OH(A)}$	10	"	"		"							-20 mA	"	"		"	
	$V_{OH(A)}$	11	"	"		"							-100 mA	"	"		"	
	$V_{OH(B)}$	12	"	"		"								"	"	-20 mA	"	
	$V_{OH(B)}$	13	"	"		"								"	"	-100 mA	"	
	V_{IO}	14	2.5 V	2.5 V										"			"	
	$+I_{IB}$	15	"	"										"			"	
	$-I_{IB}$	16	"	"										"			"	
	I_{IO}	17																
	CMR	18	V_{CM}	V_{CM}										GND			20 V	
	I_{IN}	19	2.5 V	2.5 V										"			35 V	
	$V_{SAT(OSC)}$	20	2.5 V	2.5 V		5 V			5 mA					"			20 V	
	V_{HI}	21	GND	5.1 V										"			"	
	V_{LO}	22	5.1 V	GND										"			"	

See footnotes at end of table.

TABLE III. Group A inspection for device types 02 and 04 – Continued.

Subgroup	Symbol	Test no.	Energized relays				Equations and notes	Limits		Unit
				No.	Value	Unit		Min	Max	
1 Tc = +25°C	V_{REF}	1		16	E1	V	V_{REF} = E1	5.05	5.15	V
	V_{RLINE}	2		"	E2	"	V_{RLINE} = E3 – E2	-30	30	mV
					E3	"				
	V_{RLOAD}	3		"	E4	"	V_{RLOAD} = E4 – E1	-50	50	mV
	I_{OS}	4		"	I1	mA	I_{OS} = I1	-125		mA
	I_C	5		13	I2	µA	I_C = I2 1/		200	µA
	$V_{OL(A)}$	6		11	E5	V	$V_{OL(A)}$ = E5		0.4	V
	$V_{OL(A)}$	7		11	E6	"	$V_{OL(A)}$ = E6		2.0	"
	$V_{OL(B)}$	8		14	E7	"	$V_{OL(B)}$ = E7		0.4	"
	$V_{OL(B)}$	9		14	E8	"	$V_{OL(B)}$ = E8		2.0	"
	$V_{OH(A)}$	10		11	E9	"	$V_{OH(A)}$ = E9	18		"
	$V_{OH(A)}$	11		11	E10	"	$V_{OH(A)}$ = E10	17		"
	$V_{OH(B)}$	12		14	E11	"	$V_{OH(B)}$ = E11	18		"
	$V_{OH(B)}$	13		14	E12	"	$V_{OH(B)}$ = E12	17		"
	V_{IO}	14	K12 (pos. 3), K13, K15	9	E13	"	V_{IO} = (E13 – 2.5) / 101	-5	5	mV
	$+I_{IB}$	15	K3, K12 (pos. 3), K13, K15	"	E14	"	$+I_{IB}$ = (E13 – E14) / 101000	0.01	10	µA
	$-I_{IB}$	16	K2, K12 (pos. 3), K13, K15	"	E15	"	$-I_{IB}$ = (E15 – E13) / 101000	0.01	10	µA
	I_{IO}	17					I_{IO} = ($+I_{IB}$) – ($-I_{IB}$)	-1	1	µA
	CMR	18	K12 (pos. 3), K13, K15	9	E16	V	3/	60		dB
	I_{IN}	19		15	I3	mA	I_{IN} = I3		20	mA
	$V_{SAT(OSC)}$	20		5	E17	V	$V_{SAT(OSC)}$ = E17	0.5	1.1	V
	V_{HI}	21	K12 (pos. 3)	9	E18	"	V_{HI} = E18	3.8		"
	V_{LO}	22	"	"	E19	"	V_{LO} = E19		0.5	"

See footnotes at end of table.

TABLE III. Group A inspection for device types 02 and 04 – Continued.

Subgroup	Symbol	Test no.	Adapter pin numbers															
			1	2	3	4	5	6	7	8	9	10	11	12	13	14	15	16
			(-) INPUT	(+) INPUT	Sync	OSC	C_T	R_T	DIS-CHG	SS	COMP	SHUT-DOWN	O/P A	GND	V_C	O/P B	V_{IN}	V_{REF}
2 Tc = +125°C	V_{REF}	23	2.5 V	2.5 V										GND			20 V	
	V_{RLINE}	24	"	"										"			8 V	
			"	"													35 V	
	V_{RLOAD}	25	"	"										"			20 V	-20 mA
	I_{OS}	26	"	"										"			20 V	0 V
	I_C	27	"	"								1.6 V		"	35 V		30 V	
	$V_{OL(A)}$	28	GND	V_{REF}		2/							20 mA	"	20 V		20 V	
	$V_{OL(A)}$	29	"	"		"							100 mA	"	"		"	
	$V_{OL(B)}$	30	"	"		"								"	"	20 mA	"	
	$V_{OL(B)}$	31	"	"		"								"	"	100 mA	"	
	$V_{OH(A)}$	32	"	"		"							-20 mA	"	"		"	
	$V_{OH(A)}$	33	"	"		"							-100 mA	"	"		"	
	$V_{OH(B)}$	34	"	"		"								"	"	-20 mA	"	
	$V_{OH(B)}$	35	"	"		"								"	"	-100 mA	"	
	V_{IO}	36	2.5 V	2.5 V										"			"	
	$+I_{IB}$	37	"	"										"			"	
	$-I_{IB}$	38	"	"										"			"	
	I_{IO}	39																
	CMR	40	V_{CM}	V_{CM}										GND			20 V	
	I_{IN}	41	2.5 V	2.5 V										"			35 V	
	V_{HI}	42	GND	5.1 V										"			20 V	
	V_{LO}	43	5.1 V	GND										"			20 V	
3 Tc = -55°C		44 to 64	All test parameters, test conditions, equations, and test limits are identical with those specified in table III, subgroup 2, T_C = +125°C. Except for I_{IN} at –55°C. The maximum limit is 20 mA.															

See footnotes at end of table.

TABLE III. Group A inspection for device types 02 and 04 – Continued.

Subgroup	Symbol	Test no.	Energized relays				Equations and notes	Limits		Unit
				No.	Value	Unit		Min	Max	
2 Tc = +125°C	V_{REF}	23		16	E20	V	V_{REF} = E20	5.05	5.2	V
	V_{RLINE}	24		"	E21	"	V_{RLINE} = E22 – E21	-30	30	mV
				"	E22	"				
	V_{RLOAD}	25		"	E23	"	V_{RLOAD} = E23 – E20	-50	50	mV
	I_{OS}	26		"	I4	mA	I_{OS} = I4	-125		mA
	I_C	27		13	I5	µA	I_C = I5 1/		200	µA
	$V_{OL(A)}$	28		11	E24	V	$V_{OL(A)}$ = E24		0.4	V
	$V_{OL(A)}$	29		11	E25	"	$V_{OL(A)}$ = E25		2.0	"
	$V_{OL(B)}$	30		14	E26	"	$V_{OL(B)}$ = E26		0.4	"
	$V_{OL(B)}$	31		14	E27	"	$V_{OL(B)}$ = E27		2.0	"
	$V_{OH(A)}$	32		11	E28	"	$V_{OH(A)}$ = E28	18		"
	$V_{OH(A)}$	33		11	E29	"	$V_{OH(A)}$ = E29	17		"
	$V_{OH(B)}$	34		14	E30	"	$V_{OH(B)}$ = E30	18		"
	$V_{OH(B)}$	35		14	E31	"	$V_{OH(B)}$ = E31	17		"
	V_{IO}	36	K12 (pos. 3), K13, K15	9	E32	"	V_{IO} = (E32 – 2.5) / 101	-5	5	mV
	$+I_{IB}$	37	K3, K12 (pos. 3), K13, K15	"	E33	"	$+I_{IB}$ = (E32 – E33) / 101000	0.01	10	µA
	$-I_{IB}$	38	K2, K12 (pos. 3), K13, K15	"	E34	"	$-I_{IB}$ = (E34 – E32) / 101000	0.01	10	µA
	I_{IO}	39					I_{IO} = ($+I_{IB}$) – ($-I_{IB}$)	-1	1	µA
	CMR	40	K12 (pos. 3), K13, K15	9	E35	V	3/	60		dB
	I_{IN}	41		15	I6	mA	I_{IN} = I6		18	mA
	V_{HI}	42	K12 (pos. 2)	9	E36	V	V_{HI} = E36	3.8		V
	V_{LO}	43	"	"	E37	V	V_{LO} = E37		0.5	V
3 Tc = -55°C		44 to 64								

See footnotes at end of table.

TABLE III. Group A inspection for device types 02 and 04 – Continued.

Subgroup	Symbol	Test no.	Adapter pin numbers															
			1	2	3	4	5	6	7	8	9	10	11	12	13	14	15	16
			(-) INPUT	(+) INPUT	Sync	OSC	C_T	R_T	DIS-CHG	SS	COMP	SHUT-DOWN	O/P A	GND	V_C	O/P B	V_{IN}	V_{REF}
4 Tc = +25°C	ΔV_{IN} / ΔV_{REF}	65	2.5 V	2.5 V										GND			20 V + 1 V rms	
	f_{OSC}	66	"	"			.01 µF	3.6 kΩ	0 Ω					"			20 V	.01 µF to GND
	V_{OSC}	67	"	"			"	"	"					"			20 V	.01 µF to GND
	V_{RAMP}	68	"	"			"	"	"					"			"	"
	Δf_{OSC1} / ΔV_{IN}	69	"	"			"	"	"					"			8V	"
			"	"			"	"	"					"			35 V	"
	$f_{OSC(MIN)}$	70	"	"			.1 µF	150 kΩ	"					"			20 V	"
	$f_{OSC(MAX)}$	71	"	"			.001 µF	2 kΩ	"					"			"	"
	$V_{SYNC(LO)}$	72	"	"										"			"	"
	$V_{SYNC(HI)}$	73	"	"										"			"	"
	I_{SYNC}	74	"	"	3.5 V									"			"	"
	I_{SS}	75	"	"						0 V		0 V		"			"	
	I_{SD}	76	"	"								2.5 V		"			"	
	V_{SS}	77	"	"								2 V		"			"	
	$V_{SD(LO)}$	78	"	"			.01 µF	3.6 kΩ	0 Ω		3.6 V	6/		"	20 V		"	
	$V_{SD(HI)}$	79	"	"			.01 µF	3.6 kΩ	0 Ω		3.6 V	7/		"	20 V		"	
	A_{VS}	80	"	"										"			"	
	PSRR	81	5.1 V	5.1 V										"			8 V	
																	35 V	
5 Tc = +125°C	f_{OSC}	82	2.5 V	2.5 V			.01 µF	3.6 kΩ	0 Ω					"			20 V	.01 µF to GND
	V_{OSC}	83	"	"			"	"	"					"			"	"
	V_{RAMP}	84	"	"			"	"	"					"			"	"
	$f_{OSC(MIN)}$	85	"	"			.1 µF	150 kΩ	"					"			"	"
	$f_{OSC(MAX)}$	86	"	"			.001 µF	2 kΩ	"					"			"	"
	$V_{SYNC(LO)}$	87	"	"										"			"	"
	$V_{SYNC(HI)}$	88	"	"										"			"	"
	I_{SYNC}	89	"	"	3.5 V									"			"	"
	I_{SS}	90	"	"						0 V		0 V		"			"	
	I_{SD}	91	"	"								2.5 V		"			"	
	V_{SS}	92	"	"								2 V		"			"	
	$V_{SD(LO)}$	93	"	"			.01 µF	3.6 kΩ	0 Ω		3.6 V	6/		"	20 V		"	
	$V_{SD(HI)}$	94	"	"			.01 µF	3.6 kΩ	0 Ω		3.6 V	7/		"	20 V		"	
	A_{VS}	95	"	"										"			"	
	PSRR	96	5.1 V	5.1 V										"			8 V	
														"			35 V	

See footnotes at end of table.

TABLE III. Group A inspection for device types 02 and 04 – Continued.

Subgroup	Symbol	Test no.	Energized relays				Equations and notes	Limits		Unit
				No.	Value	Unit		Min	Max	
4 Tc = +25°C	ΔV_{IN} / ΔV_{REF}	65	K1	16	E56	µV rms	ΔV_{IN} / ΔV_{REF} = 20 Log (ΔV_{IN} / ΔE56)	50		dB
	f_{OSC}	66	K4, K5, K6, K7	4	f1	kHz	f_{OSC} = f1	37.5	42.5	kHz
	V_{OSC}	67	"	4	E57	V	V_{OSC} = E57	3.0		V
	V_{RAMP}	68	"	5	E58	V	V_{RAMP} = E58	3.0	3.6	V
	Δf_{OSC1} / ΔV_{IN}	69	"	4	f2	kHz	Δf_{OSC1} / ΔV_{IN} = 100 ((f2- f3) / f2)	-1	1	%
				4	f3	kHz				
	$f_{OSC(MIN)}$	70	"	4	f4	Hz	$f_{OSC(MIN)}$ = f4		150	Hz
	$f_{OSC(MAX)}$	71	"	4	f5	kHz	$f_{OSC(MAX)}$ = f5	300		kHz
	$V_{SYNC(LO)}$	72					See figure 4 5/		0.8	V
	$V_{SYNC(HI)}$	73					See figure 4 5/	2.8		V
	I_{SYNC}	74		3	I10	mA	I_{SYNC} = I10		2.5	mA
	I_{SS}	75		8	I11	µA	I_{SS} = I11	-80	-25	µA
	I_{SD}	76		10	I12	mA	I_{SD} = I12		1	mA
	V_{SS}	77		8	E59	V	V_{SS} =E59		0.6	V
	$V_{SD(LO)}$	78	K4, K5, K6, K7	11 and 14			6/		0.5	V
	$V_{SD(HI)}$	79	K4, K5, K6, K7	11 and 14			7/	1.6		V
	A_{VS}	80	K12 (pos. 3), K13, K15	9	E60	V	V_N = 1 V to 3.5 V, A_{VS} = 20 Log [ΔV_N(101) / ΔE60]	60		dB
	PSRR	81	K12 (pos. 3), K13, K15	"	E61	"	8/	60		dB
			"	"	E62	"				
5 Tc = +125°C	f_{OSC2}	82	K4, K5, K6, K7	4	f6	kHz	f_{OSC2} = f6	36	44	kHz
	V_{OSC}	83	"	4	E63	V	V_{OSC} = E63	3.0		V
	V_{RAMP}	84	"	5	E64	V	V_{RAMP} = E64	3.0	3.6	V
	$f_{OSC(MIN)}$	85	"	4	f7	Hz	$f_{OSC(MIN)}$ = f7		150	Hz
	$f_{OSC(MAX)}$	86	"	4	f8	kHz	$f_{OSC(MAX)}$ = f8	300		kHz
	$V_{SYNC(LO)}$	87					See figure 4 5/		0.8	V
	$V_{SYNC(HI)}$	88					See figure 4 5/	2.8		V
	I_{SYNC}	89		3	I13	mA	I_{SYNC} = I13		2.5	mA
	I_{SS}	90		8	I14	µA	I_{SS} = I14	-80	-25	µA
	I_{SD}	91		10	I15	mA	I_{SD} = I15		1	mA
	V_{SS}	92		8	E65	V	V_{SS} =E65		0.6	V
	$V_{SD(LO)}$	93					6/		0.5	V
	$V_{SD(HI)}$	94					7/	1.6		V
	A_{VS}	95	K12 (pos. 3), K13, K15	9	E66	V	V_N = 1 V to 3.5 V, A_{VS} = 20 Log [ΔV_N(101) / ΔE66]	60		dB
	PSRR	96	K12 (pos. 3), K13, K15	"	E67	"	8/	60		dB
			"	"	E68	"				

See footnotes at end of table.

TABLE III. Group A inspection for device types 02 and 04 – Continued.

Subgroup	Symbol	Test no.	Adapter pin numbers															
			1	2	3	4	5	6	7	8	9	10	11	12	13	14	15	16
			(-) INPUT	(+) INPUT	Sync	OSC	C_T	R_T	DIS-CHG	SS	COMP	SHUT-DOWN	O/P A	GND	V_C	O/P B	V_{IN}	V_{REF}
6 Tc = -55°C		97 to 112	All test parameters, test conditions, equations, and test limits are identical with those specified in table III, subgroup 5, T_C = +125°C.															
7	G_{BW}	113	e_i											GND			20 V	
Tc = +25°C	N_O	114	2.5 V	2.5 V										"			"	
9	t_{PW}	115	2.5 V	2.5 V			.01 µF	3.6 kΩ	0 Ω					"			20 V	
Tc = +25°C	$t_{ON(A)MAX}$ / t_{OSC}	116	"	"			"	"	"		3.6 V	GND	4/	"	20 V	4/	"	
	$t_{ON(B)MAX}$ / t_{OSC}	117	"	"			"	"	"		3.6 V	"	"	"	"	"	"	
	$t_{ON(A)MIN}$ / t_{OSC}	118	"	"			"	"	"		0.6 V	"	"	"	"	"	"	
	$t_{ON(B)MIN}$ / t_{OSC}	119	"	"			"	"	"		0.6 V	"	"	"	"	"	"	
	V_{UL}	120	GND	V_{REF}		2/								"	V_{IN}		9/	
	$t_{SD(A)}$	121	"	"		"								"	20 V		20 V	
	$t_{SD(B)}$	122	"	"		"								"	20 V		20 V	
	$t_{R(tr)A}$	123	2.5 V	2.5 V			.01 µF	3.6 kΩ	0 Ω		3.6 V	GND		GND	20 V		20 V	
	$t_{R(tf)A}$	124	"	"			"	"	"		"	"		"	"		"	
	$t_{R(tr)B}$	125	"	"			"	"	"		"	"		"	"		"	
	$t_{R(tf)B}$	126	"	"			"	"	"		"	"		"	"		"	
10	t_{PW}	127	2.5 V	2.5 V			.01 µF	3.6 kΩ	0 Ω					"			20 V	
Tc = +125°C	$t_{ON(A)MAX}$ / t_{OSC}	128	"	"			"	"	"		3.6 V	GND	4/	"	20 V	4/	"	
	$t_{ON(B)MAX}$ / t_{OSC}	129	"	"			"	"	"		3.6 V	"	"	"	"	"	"	
	$t_{ON(A)MIN}$ / t_{OSC}	130	"	"			"	"	"		0.6 V	"	"	"	"	"	"	
	$t_{ON(B)MIN}$ / t_{OSC}	131	"	"			"	"	"		0.6 V	"	"	"	"	"	"	
	V_{UL}	132	GND	V_{REF}		2/								"	V_{IN}		9/	
	$t_{SD(A)}$	133	"	"		"								"	20 V		20 V	
	$t_{SD(B)}$	134	"	"		"								"	20 V		20 V	
	$t_{R(tr)A}$	135					.01 µF	3.6 kΩ	0 Ω		3.6 V	GND		GND	20 V		20 V	
	$t_{R(tf)A}$	136					"	"	"		3.6 V	"		"	"		"	
	$t_{R(tr)B}$	137					"	"	"		0.6 V	"		"	"		"	
	$t_{R(tf)B}$	138					"	"	"		0.6 V	"		"	"		"	

See footnotes at end of table.

TABLE III. Group A inspection for device types 02 and 04 – Continued.

Subgroup	Symbol	Test no.	Energized relays				Equations and notes	Limits		Unit
				No.	Value	Unit		Min	Max	
6 Tc = -55°C		97 to 112								
7 Tc = +25°C	G_{BW}	113					$G_{BW} = f_{ei}$, when e_O = 20 mV, see figure 5	2		MHz
	N_O	114		16	E75	µV rms	N_O = E75		200	µV rms
9 Tc = +25°C	t_{PW}	115	K4, K5, K6, K7	4	t1	µs	t_{PW} = t1 see figure 4	0.3	1.0	µs
	$t_{ON(A)MAX}$ / t_{OSC}	116	K4, K5, K6, K7, K11, K12 (pos. 2)	11	t2, tper	"	$t_{ON(A)}$ MAX / t_{OSC} = t2 / tper x 100 see figure 4	45	50	%
	$t_{ON(A)MAX}$ / t_{OSC}	117	"	14	t3, tper	"	$t_{ON(B)}$ MAX / t_{OSC} = t3 / tper x 100 see figure 4	45	50	%
	$t_{ON(B)MIN}$ / t_{OSC}	118	"	11	t4, tper	"	$t_{ON(A)}$ MIN / t_{OSC} = t4 / tper x 100 see figure 4		0.001	%
	$t_{ON(B)MIN}$ / t_{OSC}	119	"	14	t5, tper	"	$t_{ON(B)}$ MIN / t_{OSC} = t5 / tper x 100 see figure 4		0.001	%
	V_{UL}	120		15	E76	V	V_{UL} = E76	6	8	V
	$t_{SD(A)}$	121		11	t6	ns	See figure 4 10/		500	ns
	$t_{SD(B)}$	122		14	t7	ns	See figure 4 10/		500	ns
	$t_{R(tr)A}$	123	K4, K5, K6, K7, K11, K12 (pos. 2)	11	t8	"	$t_{R(tr)A}$ = t8 see figure 4		600	ns
	$t_{R(tf)A}$	124	"	11	t9	"	$t_{R(tf)A}$ = t9 see figure 4		300	"
	$t_{R(tr)B}$	125	"	14	t10	"	$t_{R(tr)B}$ = t10 see figure 4		600	"
	$t_{R(tf)B}$	126	"	14	t11	"	$t_{R(tf)B}$ = t11 see figure 4		300	"
10 Tc = +125°C	t_{PW}	127	K4, K5, K6, K7	4	t12	µs	t_{PW} = t12 see figure 4	0.3	1.4	µs
	$t_{ON(A)MAX}$ / t_{OSC}	128	K4, K5, K6, K7, K11, K12 (pos. 2)	11	t13, tper	"	$t_{ON(A)}$ MAX / t_{OSC} = t13 / tper x 100 see figure 4	45	50	%
	$t_{ON(B)MAX}$ / t_{OSC}	129	"	14	t14, tper	"	$t_{ON(B)}$ MAX / t_{OSC} = t14 / tper x 100 see figure 4	45	50	%
	$t_{ON(A)MIN}$ / t_{OSC}	130	"	11	t15, tper	"	$t_{ON(A)}$ MIN / t_{OSC} = t15 / tper x 100 see figure 4		0.001	%
	$t_{ON(B)MIN}$ / t_{OSC}	131	"	14	t16, tper	"	$t_{ON(B)}$ MIN / t_{OSC} = t16 / tper x 100 see figure 4		0.001	%
	V_{UL}	132		15	E77	V	V_{UL} = E77	6	8	V
	$t_{SD(A)}$	133		11	t17	ns	See figure 4 10/		700	ns
	$t_{SD(B)}$	134		14	t18	ns	See figure 4 10/		700	ns
	$t_{R(tr)A}$	135	K4, K5, K6, K7, K11, K12 (pos. 2)	11	t19	"	$t_{R(tr)A}$ = t19 see figure 4		600	ns
	$t_{R(tf)A}$	136	"	11	t20	"	$t_{R(tf)A}$ = t20 see figure 4		300	"
	$t_{R(tr)B}$	137	"	14	t21	"	$t_{R(tr)B}$ = t21 see figure 4		600	"
	$t_{R(tf)B}$	138	"	14	t22	"	$t_{R(tf)B}$ = t22 see figure 4		300	"
11 Tc = -55°C		139 to 151								

See footnotes at end of table.

TABLE III. Group A inspection for device type 03.

Subgroup	Symbol	Test no.	Adapter pin numbers																	
			1	2	3	4	5	6	7	8	9	10	11	12	13	14	15	16	17	18
			(+) ERROR	(-) ERROR	COMP	CSS	RESET	-C.S.	+C.S.	SHUT DOWN	R_T	C_T	R_D	$\overline{SYNC}$	O/P A	V_C	GND	O/P B	V_{IN}	V_{REF}
1 Tc = +25°C	V_{REF}	1	GND	GND				GND	GND								GND		15 V	
	V_{RLINE}	2	"	"				"	"								"		8 V	
			"	"				"	"								"		35 V	
	V_{RLOAD}	3	"	"				"	"								"		15 V	-20 mA
	I_{OS}	4	"	"				"	"								"		"	0 V
	$V_{CE(SAT)A}$	5	"	"				"	"	GND					20 mA	15 V	"		"	
		6	"	"				"	"	"					100 mA	"	"		"	
	$V_{CE(SAT)B}$	7	"	"				"	"	"						"	"	20 mA	"	
		8	"	"				"	"	"						"	"	100 mA	"	
	$V_{OH(A)}$	9	V_{REF}	"				"	"			11/			-20 mA	"	"		"	
		10	"	"				"	"			"			-100 mA	"	"		"	
	$V_{OH(B)}$	11	"	"				"	"			"				"	"	-20 mA	"	
		12	"	"				"	"			"				"	"	-100 mA	"	
	I_C	13	GND	"						GND						35 V	"		"	
	I_{IN}	14	GND	"						0.4 V							"		35 V	
	V_{IO}	15	2.5 V R1 = 100 Ω	2.5 V R2 = 100 Ω													"		15 V	
	$+I_{IB}$	16	"	"													"		"	
	$-I_{IB}$	17	"	"													"		"	
	I_{IO}	18															"			
	CMR	19	0 V 100 Ω	0 V 100 Ω													"		15 V	
			5.2 V 100 Ω	5.2 V 100 Ω													"		"	
	$I_{IH}(\overline{SD})$	20	GND	GND				GND	GND	2.4 V to am-meter							"		"	
	$I_{IL}(\overline{SD})$	21	"	"				"	"	0.4 V to am-meter							"		"	
	$V_{OHP}(\overline{SD})$	22	"	"				"	"	-40 µA							"		"	
	$V_{OLP}(\overline{SD})$	23	"	"				"	120 mV	3.6 mA							"		"	
	$I_{IH}(\overline{R})$	24	"	"			2.4 V to am-meter	"	GND								"		"	
	$I_{IL}(\overline{R})$	25	"	"			0.4 V to am-meter	"	"								"		"	
	$V_{OHP}(\overline{R})$	26	"	"			-40 µA	"	"								"		"	
	$V_{OLP}(\overline{R})$	27	"	"			3.6 mA	"	"								"		3.8 V	3.8 V

See footnotes at end of table.

TABLE III. Group A inspection for device type 03 - Continued.

Subgroup	Symbol	Test no.	Energized relays				Equations and notes	Limits		Unit
				No.	Value	Unit		Min	Max	
1 Tc = +25°C	V_{REF}	1		18	E1	V	V_{REF} = E1	4.9	5.1	V
	V_{RLINE}	2		"	E2	"	V_{RLINE} = E3 – E2	-20	20	mV
				"	E3	"				
	V_{RLOAD}	3		"	E4	"	V_{RLOAD} = E4 – E1	-30	30	mV
	I_{OS}	4		"	I1	mA	I_{OS} = I1	-125		mA
	$V_{CE(SAT)A}$	5		13	E5	V	$V_{CE(SAT)A}$ = E5		0.3	V
		6		13	E6	"	$V_{CE(SAT)A}$ = E6		2.0	"
	$V_{CE(SAT)B}$	7		16	E7	V	$V_{CE(SAT)B}$ = E7		0.3	V
		8		16	E8	"	$V_{CE(SAT)B}$ = E8		2.0	"
	$V_{OH(A)}$	9		13	E9	"	$V_{OH(A)}$ = E9	12.5		"
		10		13	E10	"	$V_{OH(A)}$ = E10	12.0		"
	$V_{OH(B)}$	11		16	E11	"	$V_{OH(B)}$ = E11	12.5		"
		12		16	E12	"	$V_{OH(B)}$ = E12	12.0		"
	I_C	13		14	I2	µA	I_C = I2		150	µA
	I_{IN}	14		17	I3	mA	I_{IN} = I3		30	mA
	V_{IO}	15	K3 (pos. 3), K4, K6	3	E13	V	V_N = 2.5 V, V_{IO} = (E13 – 2.5) / 201	-5	5	mV
	$+I_{IB}$	16	K1, K3 (pos. 3), K4, K6	"	E14	"	V_N = 2.5 V, $+I_{IB}$ = (E13 – E14) / 201000	-1		µA
	$-I_{IB}$	17	K2, K3 (pos. 3), K4, K6	"	E15	"	V_N = 2.5 V, $-I_{IB}$ = (E15 – E13) / 201000	-1		µA
	I_{IO}	18					I_{IO} = ($-I_{IB}$) – ($+I_{IB}$)	-0.5	0.5	µA
	CMR	19	K3 (pos. 3), K4, K6	3	E16	V	12/	60		dB
			K3 (pos. 3), K4, K6	3	E17	"				
	$I_{IH}(\overline{SD})$	20		8	I4	µA	$I_{IH}(\overline{SD})$ = I4	-200		µA
	$I_{IL}(\overline{SD})$	21		8	I5	µA	$I_{IH}(\overline{SD})$ = I5	-360		µA
	$V_{OHP}(\overline{SD})$	22	"	"	E18	V	$V_{OHP}(\overline{SD})$ = E18	2.4		V
	$V_{OLP}(\overline{SD})$	23		"	E19	V	$V_{OLP}(\overline{SD})$ = E19		0.4	"
	$I_{IH}(\overline{R})$	24		5	I6	µA	$I_{IH}(\overline{R})$ = I6	-200		µA
	$I_{IL}(\overline{R})$	25		"	I7	µA	$I_{IL}(\overline{R})$ = I7	-360		µA
	$V_{OHP}(\overline{R})$	26		"	E20	V	$V_{OHP}(\overline{R})$ = E20	2.4		V
	$V_{OLP}(\overline{R})$	27		"	E21	V	$V_{OLP}(\overline{R})$ = E21		0.4	V

See footnotes at end of table.

TABLE III. Group A inspection for device type 03 - Continued.

Subgroup	Symbol	Test no.	Adapter pin numbers																	
			1	2	3	4	5	6	7	8	9	10	11	12	13	14	15	16	17	18
			(+) ERROR	(-) ERROR	COMP	CSS	RESET	-C.S.	+C.S.	SHUT DOWN	R_T	C_T	R_D	$\overline{SYNC}$	O/P A	V_C	GND	O/P B	V_{IN}	V_{REF}
1	$I_{IH}(\overline{S})$	28	GND	GND				GND	GND			≤ 0.5 V		2.4 V to am-meter			GND		15 V	
Tc = +25°C	$I_{IL}(\overline{S})$	29	"	"				"	"			"		0.4 V to am-meter			"		15 V	
	$V_{OHP}(\overline{S})$	30	"	"				"	"			"		-40 µA			"		15 V	
	$V_{OLP}(\overline{S})$	31	"	"				"	"			≥ 3.6 V		3.6 mA			"		15 V	
2 Tc = +125°C		32 to 62	All test parameters, test conditions, equations, and test limits are identical with those specified in table III, subgroup 1, T_C = +25°C. Except for I_{OS}, the minimum limit is –100 mA and I_{IN} the maximum limit is 25 mA.																	
3 Tc = -55°C		63 to 93	All test parameters, test conditions, equations, and test limits are identical with those specified in table III, subgroup 1, T_C = +25°C.																	
4	ΔV_{IN} / ΔV_{REF}	94	GND	GND				GND	GND								GND		15 V +1 V rms at 2.4 kHz	
Tc = +25°C	f_{OSC}	95	"	"				"	"		4.12 kΩ	.01 µF	0 Ω	2.7 kΩ to V_{REF}		15 V	"		15 V	
	V_{RV}	96	"	"				"	"		"	"	"	"			"		8 V	
	V_{RP}	97	"	"				"	"		"	"	"	"			"		35 V	
	Δf_{OSC} / ΔV_{IN}	98	"	"				"	"		"	"	"	"		15 V	"		8 V	
			"	"				"	"		"	"	"	"		"	"		35 V	
	$f_{OSC(MIN)}$	99	"	"				"	"		150 kΩ	0.2 µF	"	"		"	"		15 V	
	$f_{OSC(MAX)}$	100	"	"				"	"		2 kΩ	1.0 nF	"	"		"	"		"	
	A_{VS}	101	2.5 V R1 = 100 Ω	2.5 V R2 = 100 Ω													"		"	
	PSRR	102	"	"													"		8 V	
			"	"													"		35 V	
	V_S	103	150 mV	GND				GND									"		15 V	
	$+I_{IBS}$	104	"	"				"	GND								"		"	
	$-I_{IBS}$	105	"	"				"	"								"		"	
	V_{EC}	106	GND	"			0.4 V	"	"								"		"	
	I_{CS}	107	"	150 mV		0 V		"	"								"		"	
	$V_{R(LOW)}$	108	"	GND				"	"								"		3.8 V	3.8 V
	$V_{R(HIGH)}$	109	"	"				"	"								"		4.8 V	4.8 V
	V_{HI}	110	150 mV	"	-100 µA												"		15 V	
	V_{LO}	111	GND	150 mV	100 µA												"		"	

See footnotes at end of table.

TABLE III. Group A inspection for device type 03 - Continued.

Subgroup	Symbol	Test no.	Energized relays				Equations and notes	Limits		Unit
				No.	Value	Unit		Min	Max	
1 Tc = +25°C	$I_{IH}(\overline{S})$	28		12	I8	µA	$I_{IH}(\overline{S})$ = I8	-200		µA
	$I_{IL}(\overline{S})$	29		"	I9	"	$I_{IL}(\overline{S})$ = I9	-360		µA
	$V_{OHP}(\overline{S})$	30		"	E22	V	$V_{OHP}(\overline{S})$ = E22	2.4		V
	$V_{OLP}(\overline{S})$	31		"	E23	"	$V_{OLP}(\overline{S})$ = E23		0.4	"
2 Tc = +125°C		32 to 62								
3 Tc = -55°C		63 to 93								
4 Tc = +25°C	ΔV_{IN} / ΔV_{REF}	94	K13	18	E70	µV rms	ΔV_{IN} / ΔV_{REF} = 20 Log (ΔV_{IN} / ΔV_{REF})	50		dB
	f_{OSC}	95	K5, K7, K9	13	f1	kHz	f_{OSC} = 2(f1)	38	42	kHz
	V_{RV}	96	"	10	E71	V	V_{RV} = E71	0.45		V
	V_{RP}	97	"	10	E72	V	V_{RP} = E72	2.5	3.5	V
	Δf_{OSC} / ΔV_{IN}	98	"	13	f2	kHz	Δf_{OSC} / ΔV_{IN} = (f2 – f3) / f2 x 100	-1	1	%
			"	13	f3	kHz				
	$f_{OSC(MIN)}$	99	"	13	f4	Hz	$f_{OSC(MIN)}$ = [f4] *2		100	Hz
	$f_{OSC(MAX)}$	100	"	16	f5	kHz	$f_{OSC(MAX)}$ = [f5] *2	350		kHz
	A_{VS}	101	K3 (pos. 3), K4, K6	3	E73	V	13/	60		dB
	PSRR	102	"	"	E74	"	14/	66		dB
			"	"	E75	"				
	V_S	103	K11, K12	7	E76	"	V_S = E76 15/	60	120	mV
	$+I_{IBS}$	104	"	7	I28	µA	$+I_{IBS}$ = I28	-10		µA
	$-I_{IBS}$	105	"	6	I29	µA	$-I_{IBS}$ = I29	-10		µA
	V_{EC}	106		4	E77	V	V_{EC} = E77		0.4	V
	I_{CS}	107		4	I30	µA	I_{CS} = I30	-150	-50	µA
	$V_{R(LOW)}$	108		5	E78	V	$V_{R(LOW)}$ = E78		0.4	V
	$V_{R(HIGH)}$	109		5	E79	"	$V_{R(HIGH)}$ = E79	2.4		V
	V_{HI}	110	K3 (pos. 2)	3	E80	"	V_{HI} = E80	3.6		V
	V_{LO}	111	K3 (pos. 2)	3	E81	"	V_{LO} = E81		0.4	V

See footnotes at end of table.

TABLE III. Group A inspection for device type 03 - Continued.

Subgroup	Symbol	Test no.	Adapter pin numbers																	
			1	2	3	4	5	6	7	8	9	10	11	12	13	14	15	16	17	18
			(+) ERROR	(-) ERROR	COMP	CSS	RESET	-C.S.	+C.S.	SHUT DOWN	R_T	C_T	R_D	$\overline{SYNC}$	O/P A	V_C	GND	O/P B	V_{IN}	V_{REF}
5 Tc = +125°C	f_{OSC2}	112	GND	GND				GND	GND		4.12 kΩ	.01 µF	0 Ω	2.7 kΩ to V_{REF}			GND		15 V	
		113 to 128	All test parameters, test conditions, equations, and test limits remaining are identical with tests 96 through 111 specified in table III, subgroup 4, T_C = +25°C.																	
6 Tc = -55°C		129 to 145	All test parameters, test conditions, equations, and test limits are identical with those specified in table III, subgroup 5, T_C = +125°C.																	
7 Tc = +25°C	NO	146	GND	GND				GND	GND								GND		15 V	
	GBW	147	GND	GND													GND		15 V	
9 Tc = +25°C	t_{PW}	148	GND	GND				GND	GND		4.12 kΩ	.01 µF	0 Ω	2.7 kΩ to V_{REF}			GND		15 V	
	$t_{SD(A)}$	149	150 mV	"				"	"			11/				15 V	"		"	
	$t_{SD(B)}$	150	150 mV	"				"	"			11/				15 V	"		"	
	$t_{ON(A)\ MAX}$ / t_{OSC}	151	GND	"	3.6 V			"	"		4.12 kΩ	.01 µF	0 Ω			"	"		"	
	$t_{ON(A)\ MIN}$ / t_{OSC}	152	"	"	0.4 V			"	"		"	"	"			"	"		"	
	$t_{ON(B)\ MAX}$ / t_{OSC}	153	"	"	3.6 V			"	"		"	"	"			"	"		"	
	$t_{ON(B)\ MIN}$ / t_{OSC}	154	"	"	0.4 V			"	"		"	"	"			"	"		"	
	$t_{R(tr)A}$	155	"	"	"			"	"		"	"	"			"	"		"	
	$t_{R(tf)A}$	156	"	"	"			"	"		"	"	"			"	"		"	
	$t_{R(tr)B}$	157	"	"	"			"	"		"	"	"			"	"		"	
	$t_{R(tf)B}$	158	"	"	"			"	"		"	"	"			"	"		"	
10 Tc = +125°C	t_{PW}	159	GND	GND				GND	GND		4.12 kΩ	.01 µF	0 Ω	2.7 kΩ to V_{REF}			GND		15 V	
	$t_{SD(A)}$	160	150 mV	"				"	"			11/				15 V	"		"	
	$t_{SD(B)}$	161	150 mV	"				"	"			11/				15 V	"		"	
		162 to 169	All test parameters, test conditions, equations, and test limits remaining are identical with tests 151 through 158 specified in table III, subgroup 9, T_C = +25°C.																	
11 Tc = -55°C		170 to 180	All test parameters, test conditions, equations, and test limits are identical with those specified in table III, subgroup 9, T_C = +25°C.																	

See footnotes at end of table.

TABLE III. Group A inspection for device type 03 - Continued.

Subgroup	Symbol	Test no.	Energized relays				Equations and notes	Limits		Unit
				No.	Value	Unit		Min	Max	
5 Tc = +125°C	f_{OSC2}	112	K5, K7, K9	13	f6	kHz	f_{OSC2} = [f6] * 2	36	44	kHz
		113 to 128								
6 Tc = -55°C		129 to 145								
7 Tc = +25°C	N_O	146		18	E106	µV rms	N_O = E106		200	µV rms
	G_{BW}	147					$G_{BW} = f_{ei}$ when $e_o - e_i$, see figure 5	2		MHz
9 Tc = +25°C	t_{PW}	148	K5, K7, K9	12	t1	µs	t_{PW} = t1 16/		2	µs
	$t_{SD(A)}$	149		8 to 13	t2	"	$t_{SD(A)}$ = t2 16/		0.5	"
	$t_{SD(B)}$	150		8 to 16	t3	"	$t_{SD(B)}$ = t3 16/		0.5	"
	$t_{ON(A)\ MAX}$ / t_{OSC}	151	K3 (pos. 2), K5, K7, K8, K9, K11, K12	13	t4, t_{per}	"	$t_{ON(A)\ MAX}$ / t_{OSC} = t4 / tper x 100 16/	45	50	%
	$t_{ON(A)\ MIN}$ / t_{OSC}	152	"	13	t5, t_{per}	"	$t_{ON(A)\ MIN}$ / t_{OSC} = t5 / tper x 100 16/		0.001	"
	$t_{ON(B)\ MAX}$ / t_{OSC}	153	"	16	t6, t_{per}	"	$t_{ON(B)\ MAX}$ / t_{OSC} = t6 / tper x 100 16/	45	50	"
	$t_{ON(B)\ MIN}$ / t_{OSC}	154	"	16	t7, t_{per}	"	$t_{ON(B)\ MIN}$ / t_{OSC} = t7 / tper x 100 16/		0.001	"
	$t_{R(tr)A}$	155	"	13	t8	"	$t_{R(tr)A}$ = t8		0.3	µs
	$t_{R(tf)A}$	156	"	13	t9	"	$t_{R(tf)A}$ = t9		0.2	"
	$t_{R(tr)B}$	157	"	16	t10	"	$t_{R(tr)B}$ = t10		0.3	"
	$t_{R(tf)B}$	158	"	16	t11	"	$t_{R(tf)B}$ = t11		0.2	"
10 Tc = +125°C	t_{PW}	159	K5, K7, K9	12	t12	µs	t_{PW} = t12 16/		3	µs
	$t_{SD(A)}$	160		8 to 16	t13	"	$t_{SD(A)}$ = t13 16/		0.7	"
	$t_{SD(B)}$	161		8 to 13	t14	"	$t_{SD(B)}$ = t14 16/		0.7	"
		162 to 169								
11 Tc = -55°C		170 to 180								

See footnotes at end of table.

TABLE III. Group A inspection - Continued.

NOTES:

1/ This test applies to device type 02 only.

2/ 5 V, 50 µs pulse, toggles the “on state” between transistors A and B.

3/ Vary V_{CM} from 1.5 V to 5.2 V and measure change on pin 9, V_N = 2.5 V.

Equation for CMR test is : CMR = 20 Log | ΔV_{CM} (101) / (ΔEX - ΔV_{CM})|

Test 18, ΔEX = ΔE16
Test 40, ΔEX = ΔE35
Test 61, ΔEX = ΔE53

4/ Load resistance on outputs A and B ≥ 1 kΩ.

5/ 0.8 V to 2.8 V transition on V_{SYNC} must cause a transition in V_{OSC}.
2.8 V to 0.8 V transition on V_{SYNC} must not cause a transition in V_{OSC}.

6/ Apply 0.5 V to the shutdown pin, output should be on. (Device type 02 either output > 2.5 V)
(Device type 04 either output < 2.5 V).

7/ Apply 1.6 V to the shutdown pin, output should be off. (Device type 02 both outputs < 2.5 V)
(Device type 04 both outputs > 2.5 V).

8/ Equation for PSRR is as follows with V_N = 5.1 V:

PSRR = 20 Log | ΔV_{IN} (101) / (EX – EY) |

Test 81, (EX – EY) = (E61 – E62)
Test 96, (EX – EY) = (E67 – E68)
Test 112, (EX – EY) = (E73 – E74)

9/ Increase V_{IN} = from 5 V to the point where outputs are on: (Device type 02 on state = either output > 2.5 V),
(device type 04 on state = either output < 2.5 V).

10/ Device type 02, $t_{SD} = t_{output(\ low\ )} - t_{pin}$ 10(high).
Device type 04, $t_{SD} = t_{output(\ high\ )} - t_{pin}$ 10(high).

11/ Apply a 3.6 V, 50 µs pulse to C_T to switch output transistor (which is on).

TABLE III. Group A inspection - Continued.

NOTES:

12/ V_N = 2.5 V. Equation for CMR is as follows:

CMR = 20 Log [5.2 V (201) / | (EX – EY – 5.2) |]

Test number 19: EX = E17, EY = E16
Test number 50: EX = E40, EY = E39
Test number 81: EX = E63, EY = E62

13/ V_N = 0.5 V to 3.5 V. Equation for A_{VS} is as follows:

A_{VS} = 20 Log (ΔV_N (201) / | ΔEX |)

Test number 101: ΔEX = E73
Test number 118: ΔEX = E84
Test number 135: ΔEX = E95

14/ V_N = 2.5 V. Equation for PSRR is as follows:

PSRR = 20 Log [ΔV_{IN} (201) / | (EX – EY) |]

Test number 102: (EX – EY) = (E75 – E74)
Test number 119: (EX – EY) = (E86 – E85)
Test number 136: (EX – EY) = (E97 – E96)

15/ Increase voltage on +C.S. until V shutdown ≤ 0.4 V. Record V +C.S.

16/ See figure 4.

4.4 Technology Conformance inspection (TCI). Technology conformance inspection shall be in accordance with MIL-PRF-38535 and herein for groups A, B, C, and D inspections (see 4.4.1 through 4.4.4).

4.4.1 Group A inspection. Group A inspection shall be in accordance with table III of MIL-PRF-38535 and as follows:

a. Tests shall be as specified in table II herein.

b. Subgroup 8 shall be omitted.

4.4.2 Group B inspection. Group B inspection shall be in accordance with table II of MIL-PRF-38535.

4.4.3 Group C inspection. Group C inspection shall be in accordance with table IV of MIL-PRF-38535 and as follows:

a. End point electrical parameters shall be as specified in table II herein.

b. The steady-state life test duration, test condition, and test temperature, or approved alternatives shall be as specified in the device manufacturer's QM plan in accordance with MIL-PRF-38535. The burn-in test circuit shall be maintained under document control by the device manufacturer's Technology Review Board (TRB) in accordance with MIL-PRF-38535 and shall be made available to the acquiring or preparing activity upon request. The test circuit shall specify the inputs, outputs, biases, and power dissipation, as applicable, in accordance with the intent specified in test method 1005 of MIL-STD-883.

c. Special subgroups shall be added to group C inspection requirements for class B devices, and shall consist of the tests, conditions, and limits of subgroups 10 and 11 as specified in table III herein.

4.4.4 Group D inspection. Group D inspection shall be in accordance with table V of MIL-PRF-38535. End point electrical parameters shall be as specified in table II herein.

4.5 Methods of inspection. Methods of inspection shall be specified and as follows.

4.5.1 Voltage and current. All voltage values given are referenced to the external zero reference level of the supply. Currents values given for conventional current and are positive when flowing into the referenced terminal.

5. PACKAGING

5.1 Packaging requirements. For acquisition purposes, the packaging requirements shall be as specified in the contract or order (see 6.2). When actual packaging of materiel is to be performed by DoD personnel, these personnel need to contact the responsible packaging activity to ascertain requisite packaging requirements. Packaging requirements are maintained by the Inventory Control Point's packaging activity within the Military Department of Defense Agency, or within the Military Department's System Command. Packaging data retrieval is available from the managing Military Department's or Defense Agency's automated packaging files, CD-ROM products, or by contacting the responsible packaging activity.

TABLE IV. Group C end-point electrical parameters. T_C = +25°C

Device type	Test	Limits		Unit	Delta	Unit
		Min	Max			
All	V_{IO}	---	5	mV	±0.7	mV
All	I_{IB}	0.1	10.0	µA	±1	µA
01	V_{REF}	4.8	5.2	V	±20	mV
02, 04	V_{REF}	5.0	5.2	V	±20	mV
03	V_{REF}	4.9	5.1	V	±20	mV

6. NOTES

6.1 Intended use. Microcircuits conforming to this specification are intended for original equipment design applications and logistic support of existing equipment.

6.2 Acquisition requirements. Acquisition documents should specify the following:

a. Title, number, and date of the specification.

b. Pin and compliance identifier, if applicable (see 1.2).

c. Requirements for delivery of one copy of the conformance inspection data pertinent to the device inspection lot to be supplied with each shipment by the device manufacturer, if applicable.

d. Requirements for certificate of compliance, if applicable.

e. Requirements for notification of change of product or process to acquiring activity in addition to notification of the qualifying activity, if applicable.

f. Requirements for failure analysis (including required test condition of MIL-STD-883, method 5003), corrective action and reporting of results, if applicable.

g. Requirements for product assurance options.

h. Requirements for special carriers, lead lengths, or lead forming, if applicable. These requirements should not affect the part number. Unless otherwise specified, these requirements will not apply to direct purchase by or direct shipment to the Government.

i. Requirements for "JAN" marking.

j. Packaging requirements (see 5.1).

6.3 Superseding information. The requirements of MIL-M-38510 have been superseded to take advantage of the available Qualified Manufacturer Listing (QML) system provided by MIL-PRF-38535. Previous references to MIL-M-38510 in this document have been replaced by appropriate references to MIL-PRF-38535. All technical requirements now consist of this specification and MIL-PRF-38535. The MIL-M-38510 specification sheet number and PIN have been retained to avoid adversely impacting existing government logistics systems and contractor's parts lists.

6.4 Qualification. With respect to products requiring qualification, awards will be made only for products which are, at the time of award of contract, qualified for inclusion in Qualified Manufacturers List QML-38535 whether or not such products have actually been so listed by that date. The attention of the contractors is called to these requirements, and manufacturers are urged to arrange to have the products that they propose to offer to the Federal Government tested for qualification in order that they may be eligible to be awarded contracts or purchase orders for the products covered by this specification. Information pertaining to qualification of products may be obtained from DSCC-VQ, 3990 E. Broad Street, Columbus, Ohio 43123-1199.

6.5 Abbreviations, symbols, and definitions. The abbreviations, symbols, and definitions used herein are defined in MIL-PRF-38535 and MIL-STD-1331.

6.6 Logistic support. Lead materials and finishes (see 3.3) are interchangeable. Unless otherwise specified, microcircuits acquired for Government logistic support will be acquired to device class B (see 1.2.2), lead material and finish A (see 3.4). Longer length leads and lead forming should not affect the part number.

6.7 Substitutability. The cross-reference information below is presented for the convenience of users. Microcircuits covered by this specification will functionally replace the listed generic-industry type. Generic-industry microcircuit types may not have equivalent operational performance characteristics across military temperature ranges or reliability factors equivalent to MIL-M-38510 device types and may have slight physical variations in relation to case size. The presence of this information should not be deemed as permitting substitution of generic-industry types for MIL-M-38510 types or as a waiver of any of the provisions of MIL-PRF-38535.

Military device type	Generic-industry type
01	1524
02	1525A
03	1526
04	1527A

6.8 Changes from previous issue. Asterisks are not used in this revision to identify changes with respect to the previous issue, due to the extensiveness of the changes.

Custodians:
Army – CR
Navy - EC
Air Force - 11
DLA – CC

Review activities:
Army - MI, SM
Navy - AS, CG, SH, TD
Air Force – 03, 19, 99

Preparing activity:
DLA - CC

Project 5962-2037

NOTE: The activities listed above were interested in this document as of this date of this document. Since organizations and responsibilities can change, you should verify the currency of the information above using the ASSIT Online database at www.dodssp.daps.mil.