MILITARY SPECIFICATION

MICROCIRCUITS, LINEAR, 10-BIT DIGITAL-TO-ANALOG CONVERTER, MONOLITHIC SILICON

This specification is approved for use by all Departments and Agencies of the Department of Defense.

1. SCOPE

1.1 Scope. This specification covers the detail requirements for monolithic silicon, 10-bit binary digital-to-analog converters containing deposited thin film resistor networks. Two product assurance classes and a choice of case outline and lead finish are reflected in the complete part number.

1.2 Part number. The part number shall be in accordance with MIL-M-38510, and as specified herein.

1.2.1 Device type. The device type shall be as follows:

Device type	Circuit
01	10-bit binary, internal ref. 2 mA F.S., D/A converter

1.2.2 Device class. The device class shall be the product assurance level as defined in MIL-M-38510.

1.2.3 Case outline. The case outline shall be designated as follows:

Outline letter	Case outline, MIL-M-38510, appendix C
E	D-2 (16-lead, 1/4" x 7/8" dual-in-line package)

1.3 Absolute maximum ratings:

Supply voltage (V_{CC})	+16.5 V
Supply voltage (V_{EE})	-16.5 V
Digital input voltage (V_{IN})	V_{CC} to ground
Output voltage compliance (V_{OUT})	-2 V to +10 V
10 V span resistor to ground	V_{CC} to V_{EE}
Bipolar offset resistor to ground	V_{CC} to V_{EE}
Lead temperature (soldering, 60 seconds)	300°C
Storage temperature	-65°C to +150°C
Junction temperature (T_J)	175°C
Maximum power dissipation	500 mW

1.4 Recommended operating conditions.

Supply voltage range	V_{CC} = 4.5 V to 16.5 V, V_{EE} = -10.8 V to -16.5 V
Output compliance voltage range	V_{OUT} = -2 V to +10 V
Logic thresholds: TTL logic "0"	0.8 V (max)
TTL logic "1"	2.2 V (min)
CMOS logic "0"	30% V_{CC} (max)
CMOS logic "1"	70% V_{CC} (min)
Ambient operating temperature range (T_A)	-55°C to +125°C

Beneficial comments (recommendations, additions, deletions) and any pertinent data which may be of use in improving this document should be addressed to: Rome Air Development Center (RBE-2), Griffiss AFB, NY 13441, by using the self-addressed Standardization Document Improvement Proposal (DD Form 1426) appearing at the end of this document or by letter.

DISTRIBUTION STATEMENT A. Approved for public release; distribution is unlimited.

1.5 Power and thermal characteristics.

Package	Case outline	Maximum allowable power dissipation	Maximum θ_{JC}	Maximum θ_{JA}
16-lead dual-in-line	E	500 mW at T_A = 125°C	35°C/W	100°C/W

2. APPLICABLE DOCUMENTS

2.1 Government documents.

2.1.1 Specification and standard. The following specification and standard form a part of this specification to the extent specified herein. Unless otherwise specified, the issues of these documents shall be those listed in the issue of the Department of Defense Index of Specifications and Standards (DODISS) and supplement thereto, cited in the solicitation.

SPECIFICATION

MILITARY

MIL-M-38510 - Microcircuits, General Specification for.

STANDARD

MILITARY

MIL-STD-883 - Test Methods and Procedures for Microelectronics.

(Copies of the specification and standard required by contractors in connection with specific acquisition functions should be obtained from the contracting activity or as directed by the contracting activity.)

2.2 Order of precedence. In the event of a conflict between the text of this specification and the references cited herein (except for associated detail specifications, specification sheets, or MS standards), the text of this specification shall take precedence. Nothing in this specification, however, shall supersede applicable laws and regulations unless a specific exemption has been obtained.

3. REQUIREMENTS

3.1 Detail specification. The individual item requirements shall be in accordance with MIL-M-38510, and as specified herein.

3.2 Design, construction, and physical dimensions. The design, construction, and physical dimensions shall be as specified in MIL-M-38510 and herein.

3.2.1 Case outline. The case outline shall be as specified in 1.2.3.

3.2.2 Terminal connections. The terminal connections shall be as specified on figure 1.

3.2.3 Functional schematic circuit. The functional schematic circuit shall be as specified on figure 2.

3.2.4 Schematic circuit. The schematic circuit shall be submitted to the preparing activity prior to inclusion of the manufacturer's device in this specification and shall be submitted to the qualifying activity and agent activity (DESC-ECS) as a prerequisite for qualification. All qualified manufacturers' schematics shall be maintained by the agent activity and will be available upon request.

3.2.5 Package and sealing material. Package and sealing material shall be in accordance with MIL-M-38510.

3.3 Lead material and finish. The lead material and finish shall be in accordance with MIL-M-38510 (see 6.4).

TABLE I. Electrical performance characteristics.

Test	Symbol	Conditions (see 3.4 and figure 6)	Limits Min	Limits Max	Unit
Monotonicity		Guaranteed by the bit linearity and major carry error tests		10	Bits
Supply current from V_{CC}	I_{CC}	All digital inputs at 15.0 V	+2	+10	mA
Supply current from V_{EE}	I_{EE}	All digital inputs at 0 V	-16	-2	mA
Reference voltage output	V_{REF}	I_{REF} = 2 mA	2.45	2.55	V
Digital input leakage	I_{IL}	All digital inputs at 15 V	-100	+1	µA
	I_{IH}	All digital inputs at 15 V	-1	+100	µA
Zero scale current: TTL	I_{ZS1}	V_{CC} = +5 V, All digital inputs at 0.8 V T_A = 25°C	-0.5	+0.5	LSB
CMOS	I_{ZS2}	All digital inputs at 4.5 V, T_A = 25°C	-0.5	+0.5	LSB
Zero scale current drift	d_{IZS2}/dT	All digital inputs at 0.8 V	-10.0	+10.0	mLSB /°C
Full-scale current: TTL	I_{FS1}	All inputs logic "1", V_O = 0 V, V_{CC} = +5 V	+1.5	+2.5	mA
CMOS	I_{FS2}	All inputs logic "1", V_O = 0 V, V_{CC} = +15 V	+1.5	+2.5	mA
Full-scale current at +10 V compliance	I_{FS+}	All digital inputs logic "1", V_O = +10 V, V_{CC} = +5 V	+1.5	+2.5	mA
Full-scale current at -2 V compliance	I_{FS-}	All digital inputs logic "1", V_O = -2 V, V_{CC} = +5 V	+1.5	+2.5	mA
Full-scale current change	d_{IFS+}	All digital inputs logic "1", V_O = 0 V to +10 V	-5.0	+5.0	µA
Full-scale current change	d_{IFS-}	All digital inputs logic "1", V_O = 0 V to -2 V	-5.0	+5.0	µA
Bipolar offset error	B_{POE}	All inputs logic "0", T_A = 25°C 1/	-5.0	+5.0	LSB
Bipolar offset drift	d_{BPOE}/dT	All inputs logic "0", measure V_O	-60.0	+60.0	mLSB /°C

See footnotes at end of table.

TABLE I. Electrical performance characteristics - Continued.

Test	Symbol	Conditions (see 3.4 and figure 6)	Limits Min	Limits Max	Unit
Bipolar zero error (TTL)	B_{ZE}	Input bits = 512 (binary), T_A = 25°C	-2.5	+2.5	LSB
Bipolar zero drift	d_{BZ}/dT	Input bits = 512 (binary)	-20.0	+20.0	mLSB /°C
Gain error (full scale): TTL	A_{E1}	From 0 to full-scale, V_{CC} = +5 V, A_{E1} = 10 (V_{FS}-9.99023-V_{OS}), T_A = 25°C 2/	-.5	+.5	%FS
CMOS	A_{E2}	From 0 to full-scale, A_{E2} = 10(V_{FS}-9.99023-V_{OS}), T_A = 25°C 2/	-.5	+.5	%FS
Gain error drift	d_{AE2}/dT	Change in V_{FS} from -55°C to +125°C	-.006	+.006	%/°C
Power supply sensitivity at full-scale from V_{CC} TTL	$+P_{SS1}$	All digital inputs at V_{CC}; V_{CC} = +5 ±0.5 V, T_A = 25°C 3/	-0.01	+0.01	LSB /%PS
		V_{CC} = +5 ±0.5 V, -55°C <T_A <125°C	-0.02	+0.02	LSB /%PS
CMOS	$+P_{SS2}$	V_{CC} = +15 ±1.5 V, T_A = 25°C 3/	-0.01	+0.01	LSB /%PS
		V_{CC} = +15 ±1.5 V, -55°C <TA <125°C	-0.02	+0.02	LSB /%PS
Power supply sensitivity at full-scale from V_{EE} CMOS	$-P_{SS1}$	V_{EE} = -15 ±1.5 V, T_A = 25°C 3/	-.025	+.025	LSB /%PS
		V_{EE} = -15 ±1.5 V, -55°C <T_A <125°C	-0.05	+0.05	LSB /%PS
TTL	$-P_{SS2}$	V_{EE} = -12 ±1.2 V, V_{CC} = +5.0 V, T_A = 25°C 3/	-.025	+.025	LSB /%PS
		V_{EE} = -12 ±1.2 V, V_{CC} = +5.0 V, -55°C <T_A <125°C	-0.05	+0.05	LSB /%PS

See footnotes at end of table.

TABLE I. Electrical performance characteristics - Continued.

Test	Symbol	Conditions (see 3.4 and figure 6)	Limits Min	Limits Max	Unit
Linearity error (end point)	L_E	All combinations of bits 1 to 4, bits 5 to 10 are turned off. Measure V_O relative to REF DAC output. Record the code words for the worst case positive bit error; and for the worst case negative bit error. 4/	-0.5	+0.5	LSB
		Turn on bits 5 to 10, one bit at a time, and measure relative to REF DAC output. Bits 1 to 4 are turned off. Record the measured bit error sign. 4/	-0.5	+0.5	LSB
Linearity error (end point)	L_E	(All codes test) See table III	-0.5	+0.5	LSB
Major carry errors	MCE1-MCE10	The difference between adjacent codes at all major transitions (i.e. from 01111111 to 10000000) 3/	-1.0	+1.0	LSB
Output current settling time (to 1/2 LSB) 0 V to FS	t_{SLH}	V_{CC} = +5 V. All inputs switched simultaneously. Measure the time to settle to within 1/2 LSB of the final value. T_A = 25°C. (see figures 7 and 8)		500	ns
Output current settling time (to 1/2 LSB) FS to 0 V	t_{SLH}	V_{CC} = +5 V. All inputs switched simultaneously. Measure the time to settle to within 1/2 LSB of the final value. T_A = 25°C. (see figures 7 and 8)		500	ns
Noise	N_O	V_{CC} = +5.0 V; V_{EE} = -15 V, 0 V, 4/ All digital inputs at +2.2 V, see figure 9. T_A = 25°C, BW = 100 kHz, 5/		160	μV rms

1/ B_{POE} is the error in the -5 V DUT output voltage when the device is operated in the bipolar mode with all digital bits off.

2/ The gain error of a 10-bit D/A converter corresponds to a zero-scale to full-scale range error in LSB units (i.e. ±0.5% x 1024 LSB/100% = ±5.12 LSB).

3/ This test is performed in the unipolar mode over a 0 to 10 V range. The unipolar scale factor is 1024 LSB/10 V = 102.4 LSB/V.

4/ The manufacturer has the option of testing devices at all digital input codes or an abbreviated series of codes. The abbreviated test should have a sufficient number of codes with or without limit guard banding such that an "all-codes" test will not fail a device which passed the abbreviated test.

5/ The limit 160 μV rms over a 100 kHz bandwidth will result in less than 1/4 LSB peak noise over a 4 MHz noise bandwidth.

6/ See 6.3 for symbols and definitions.

3.4 Electrical performance characteristics. The electrical performance characteristics of table I apply over the full recommended ambient temperature range unless otherwise specified. The following conditions shall also apply unless otherwise specified:

V_{CC} = +15 V
V_{EE} = -15 V
Logic "0" = 4.5 V (max)
Logic "1" = 10.5 V (min)
Temperature range = -55°C to +125°C
Unipolar and bipolar application (see figure 3).

3.5 Electrical test requirements. The electrical test requirements for each device class shall be the subgroups specified in table II. The electrical tests for each subgroup are described in table III.

3.6 Marking. Marking shall be in accordance with MIL-M-38510, and herein.

3.6.1 Serialization. All class S devices shall be serialized in accordance with MIL-M-38510.

3.6.2 Correctness of indexing and markings. All devices shall be subjected to subgroup 1 final electrical tests specified in table II after part marking to verify that they are correctly indexed and identified by part number.

3.7 Microcircuit group assignment. The devices covered by this specification shall be in microcircuit group number 56 (see MIL-M-38510, appendix E).

TABLE II. Electrical test requirements.

MIL-STD-883 test requirements	Subgroups (see table III)	
	1/ Class S devices	1/ Class B devices
Interim electrical parameters (method 5004)	1	1
Final electrical parameters (method 5004)	1, 2, 3	1, 2, 3
Group A test requirements (method 5005)	1, 2, 3, 7, 8, 12	1, 2, 3, 7, 8, 12
Group C end-point and group B, class S, electrical parameters (method 5005)	1, 2, 3 and table IV delta limits	1 and table IV delta limits
Additional electrical subgroups for group C periodic inspection	N/A	---
Group D end-point electrical parameters (method 5005)	1, 2, 3	1

1/ PDA applies to subgroup 1 (see 4.2c).

4. QUALITY ASSURANCE PROVISIONS

4.1 Sampling and inspection. Sampling and inspection procedures shall be in accordance with MIL-M-38510 and methods 5005 and 5007, as applicable, of MIL-STD-883, except as modified herein.

4.2 Screening. Screening shall be in accordance with method 5004 of MIL-STD-883, and shall be conducted on all devices prior to qualification and quality conformance inspection. The following additional criteria shall apply:

a. Burn-in tests (method 1015 of MIL-STD-883).

1. Class S devices: Dynamic tests (test condition D or E) using the circuit shown on figure 4. Test duration shall be 240 hours minimum. Static tests (test condition A) using the circuit shown on figure 5. Test duration shall be 48 hours minimum.

2. Class B devices: Test condition A, using the circuit shown on figure 5; or test condition D, using the circuit shown on figure 4; or test condition F, using the circuit shown on figure 5.

b. Interim and final electrical test parameters shall be as specified in table II herein.

c. The percent defective allowable (PDA) for class S and class B devices shall be as specified in MIL-M-38510, based on failures from group A, subgroup 1 test after cooldown as final electrical test in accordance with method 5004 of MIL-STD-883, and with no intervening electrical measurements. If interim electrical parameter tests are performed prior to burn-in, failures resulting from pre burn-in screening may be excluded from the PDA. If interim electrical parameter tests prior to burn-in are omitted, then all screening failures shall be included in the PDA. The verified failures of group A, subgroup 1 after burn-in divided by the total number of devices submitted for burn-in in that lot shall be used to determine the percent defective for that lot, and the lot shall be accepted or rejected based on the PDA for the applicable device class.

4.3 Qualification inspection. Qualification inspection shall be in accordance with MIL-M-38510 and as specified herein. Inspections to be performed shall be those specified in method 5005 of MIL-STD-883 and herein for groups A, B, C, and D inspections (see 4.4.1 through 4.4.4).

4.4 Quality conformance inspection. Quality conformance inspection shall be in accordance with MIL-M-38510 and as specified herein. Inspections to be performed shall be those specified in method 5005 of MIL-STD-883 and herein for groups A, B, C, and D inspections (see 4.4.1 through 4.4.4).

4.4.1 Group A inspection. Group A inspection shall be in accordance with table I of method 5005 of MIL-STD-883 and as follows:

a. Tests shall be as specified in table II herein.

b. Subgroups 4, 5, 6, 9, 10, and 11 shall be omitted.

c. A special subgroup shall be added to group A inspection for all classes and it shall consist of the conditions and limits as specified in table III. Subgroup 12. LTPD shall be 15.

4.4.2 Group B inspection. Group B inspection shall consist of the test subgroups and LTPD values shown in table IIb of method 5005 of MIL-STD-883, class B, and as follows:

a. Electrical parameters shall be as specified in table II herein. For class S devices, delta limits shall apply only to subgroup 5 of group B inspection.

b. Steady-state life test for class S devices shall be in accordance with table IIa of method 5005 of MIL-STD-883, using the circuit shown on figure 4. If the alternate burn-in conditions are used, the circuit shown on figure 5 shall be used.

Device type 01
(Case E)

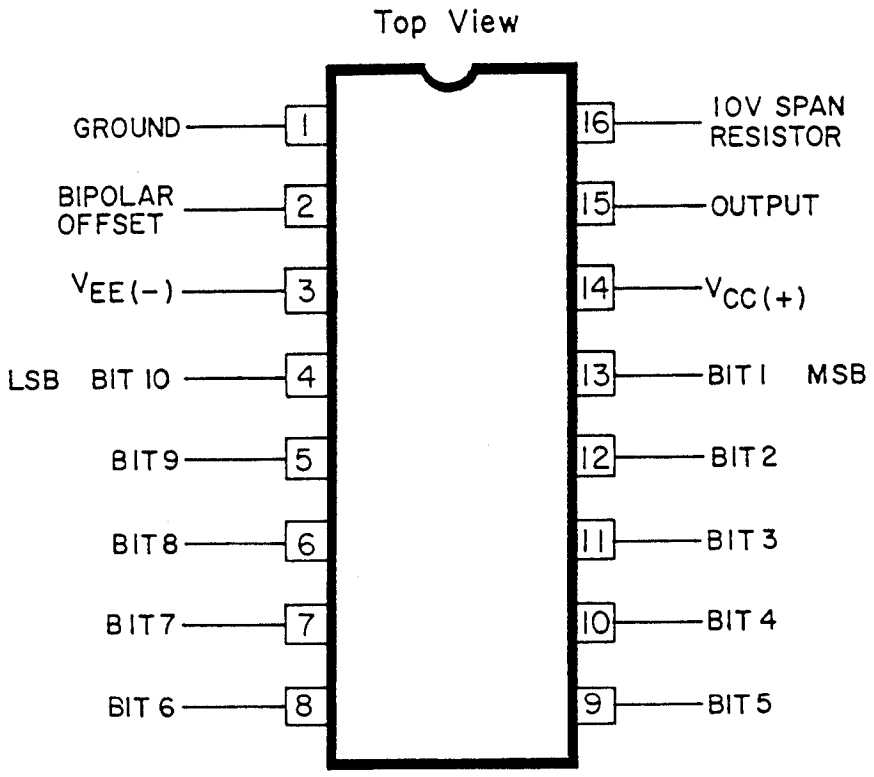

FIGURE 1. Terminal connections.

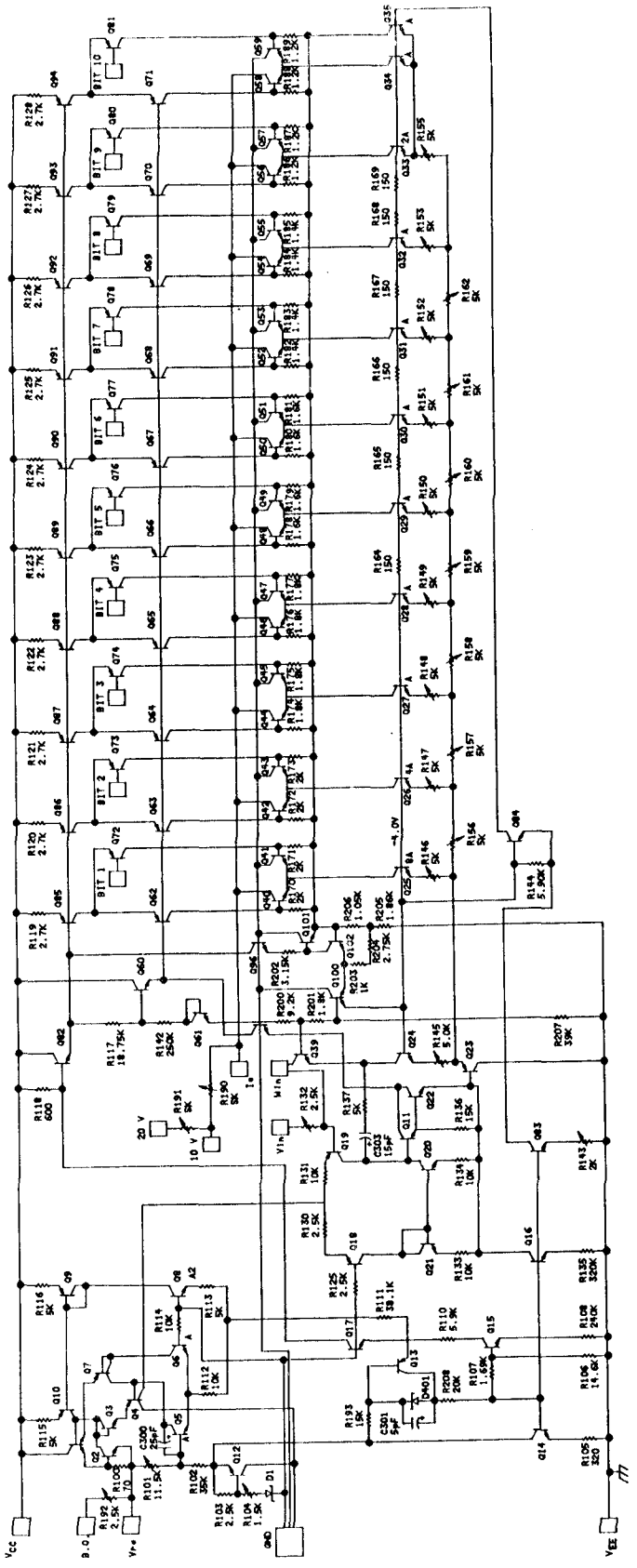

NOTE: All resistance and capacitance values are nominal. Resistance is in ohms.

FIGURE 2. Functional schematic circuits.

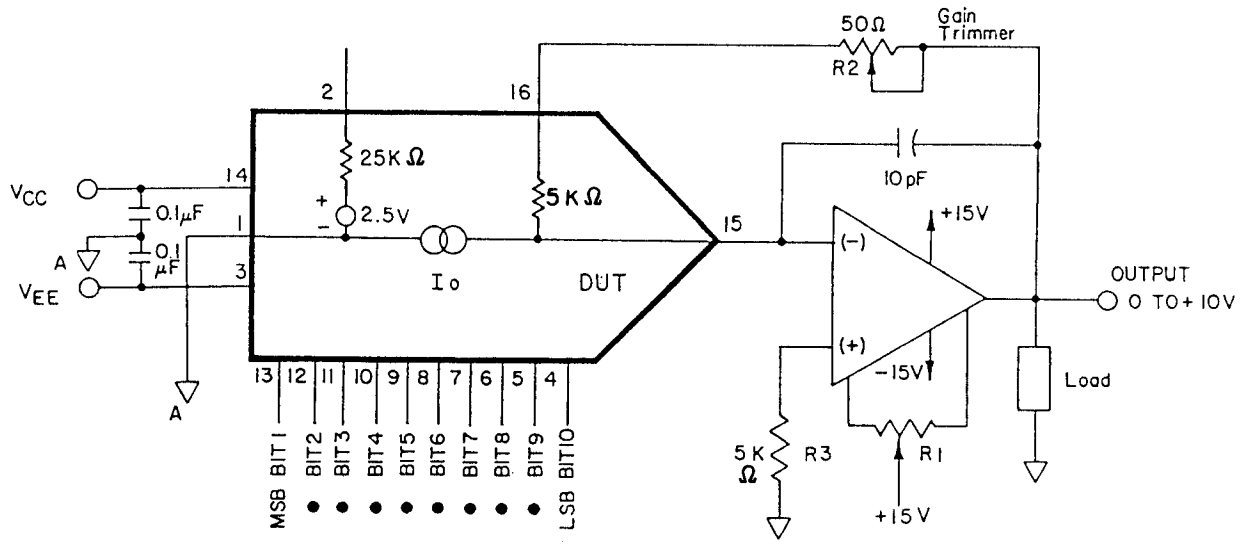

NOTE: Make all "A" grounds return to a unipoint ground point device pin 1.

STEP I ....ZERO ADJUST
Turn all bits OFF and adjust op amp trimmer, R_1, until the output reads 0.000 volts (1LSB = 9.76 mV).

STEP II ....GAIN ADJUST
Turn all bits ON and adjust 50Ω gain trimmer, R_2, until the output is 9.990 volts. (Full scale is adjusted to 1LSB less than nominal full scale of 10.000 volts.) If a 10.23 V full scale is desired (exactly 10 mV/bit), insert a 120Ω resistor in series with R_2.

FIGURE 3. Functional schematic with application notes (unipolar mode).

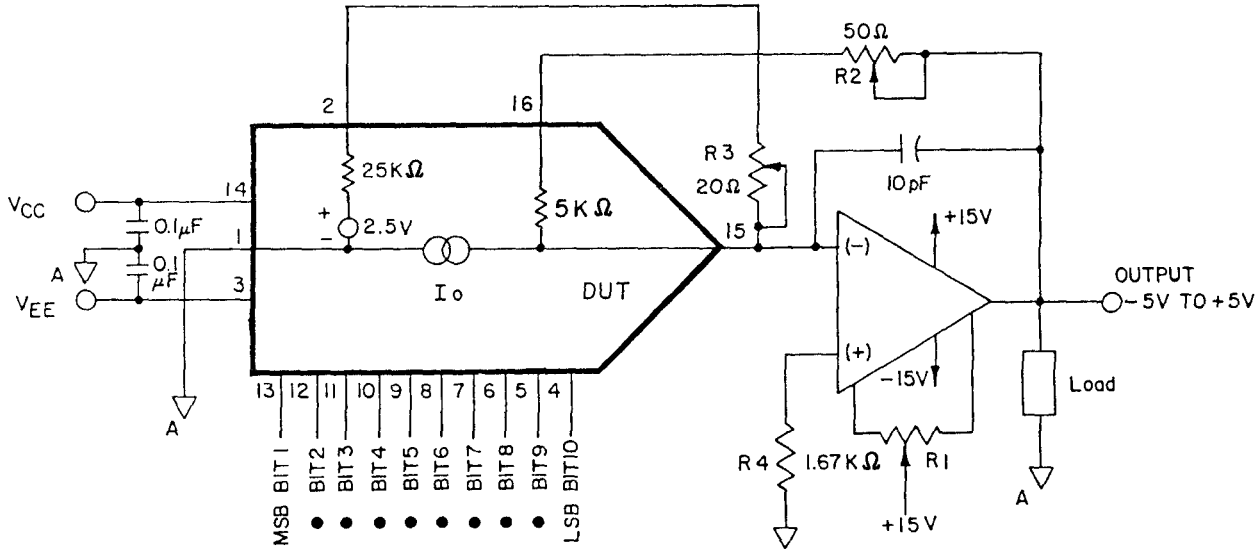

NOTE: Make all "A" grounds return to a unipoint ground point device pin 1.

STEP 1 ....BIPOLAR ZERO ADJUST
Turn on MSB only, turn OFF all other bits. Adjust 20Ω trimmer R_3, to give 0.000 output volts.

STEP 2....BIPOLAR OFFSET (GAIN) ADJUST
Turn off all bits, adjust 50Ω gain trimmer to give a reading of -5.000 volts.

FIGURE 3. Functional schematic with application notes (bipolar mode) - Continued.

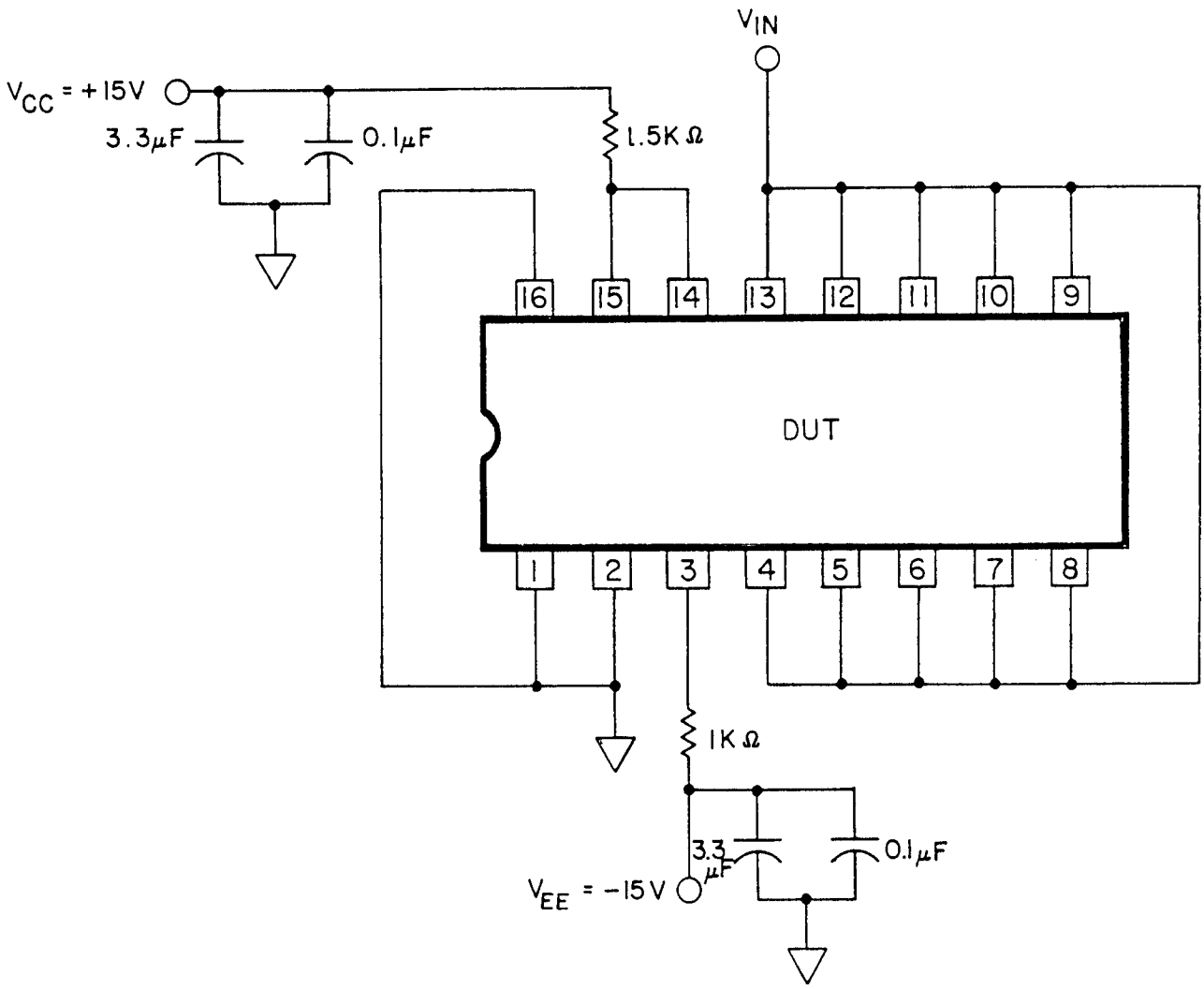

NOTE: V_{IN} = 0 volts to 15 volts peak-to-peak square wave @ f_o = 5 ±1 Hz.
The actual measured value of the resistor selected shall not exceed ±5% of its banded value due to use, heat, or age.

FIGURE 4. Test circuit, burn-in and steady state life test.

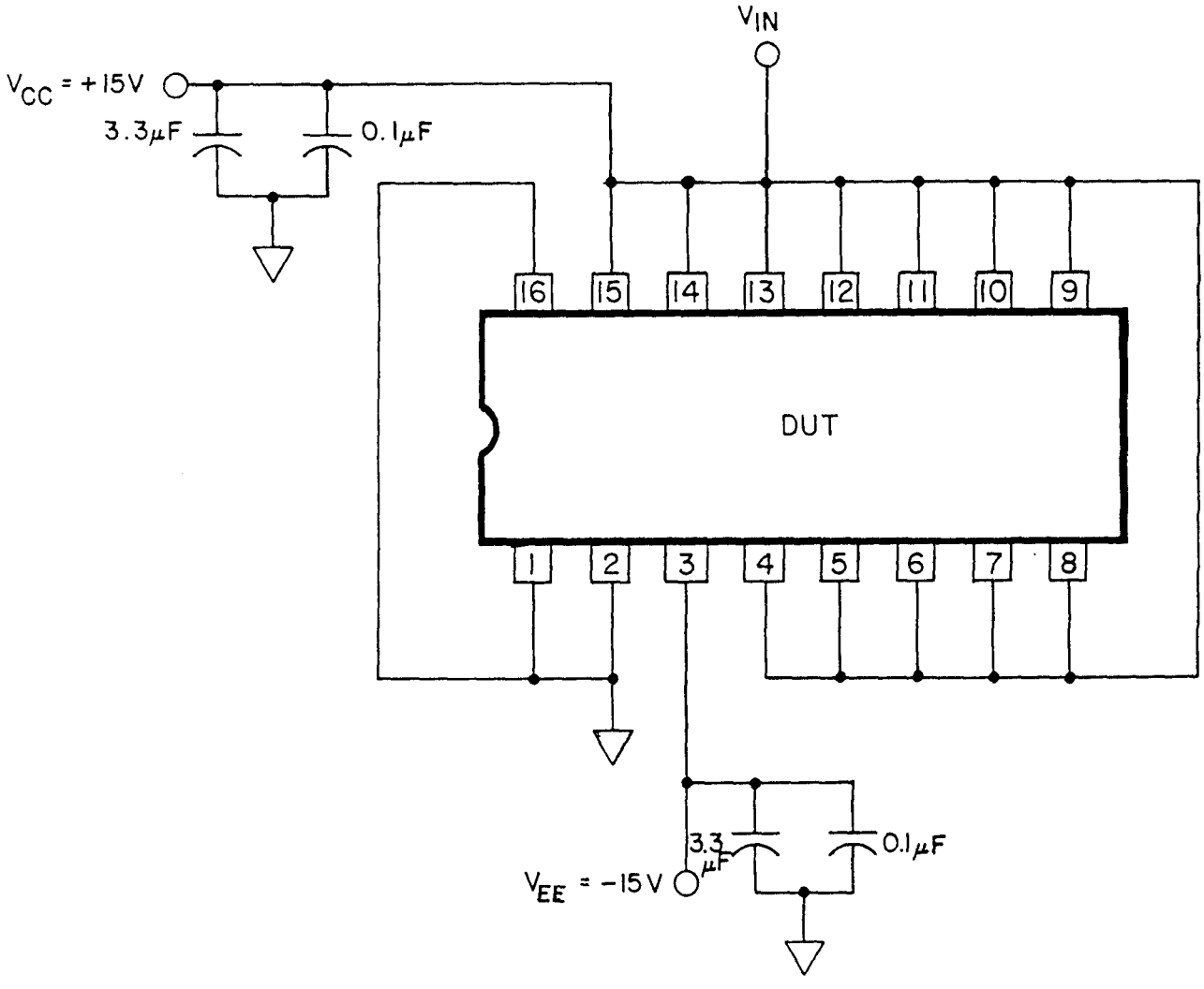

FIGURE 5. Test circuit, burn-in, steady state power and reverse bias, steady state life test, and accelerated burn-in.

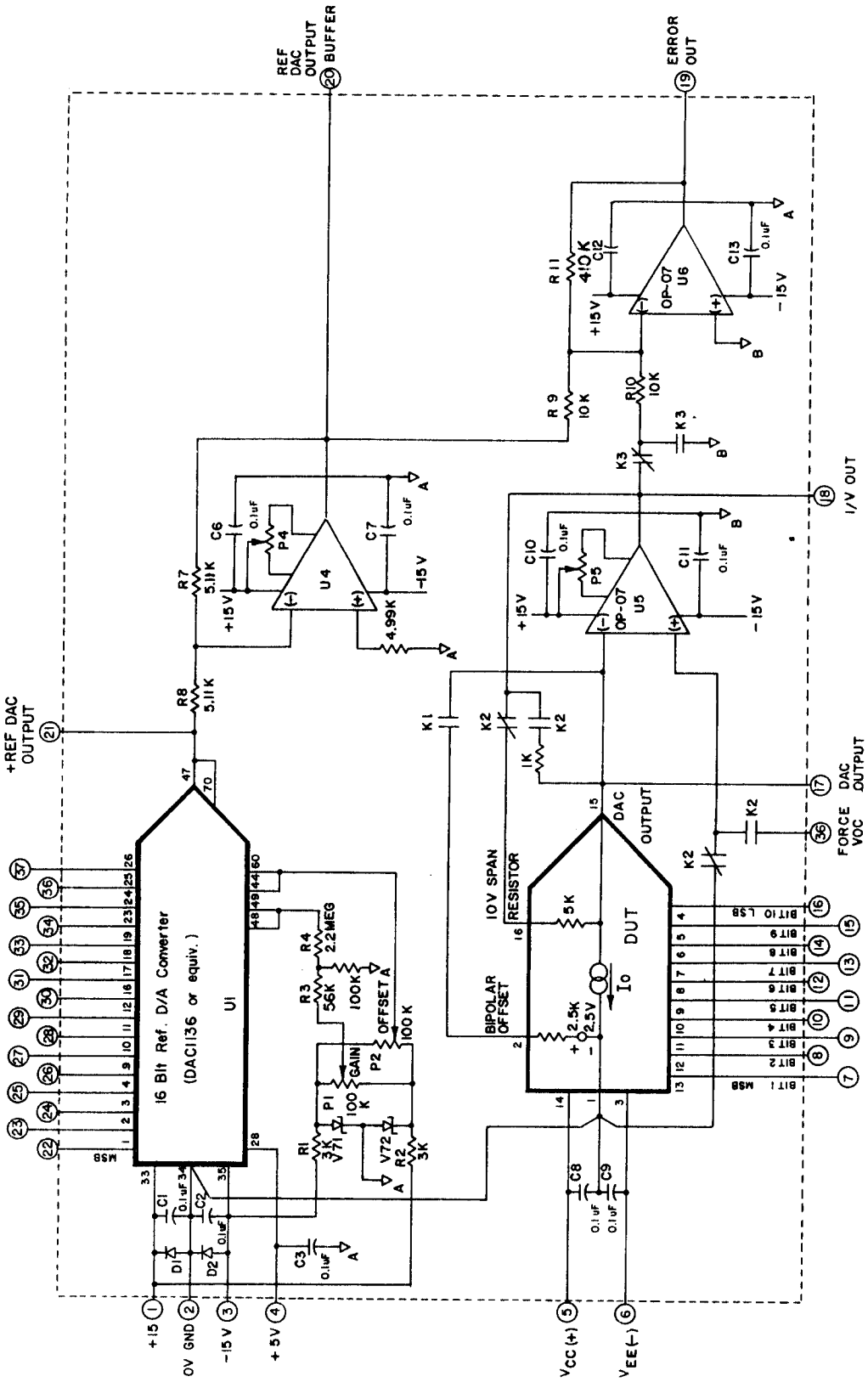

FIGURE 6. Table III test circuit for static tests.

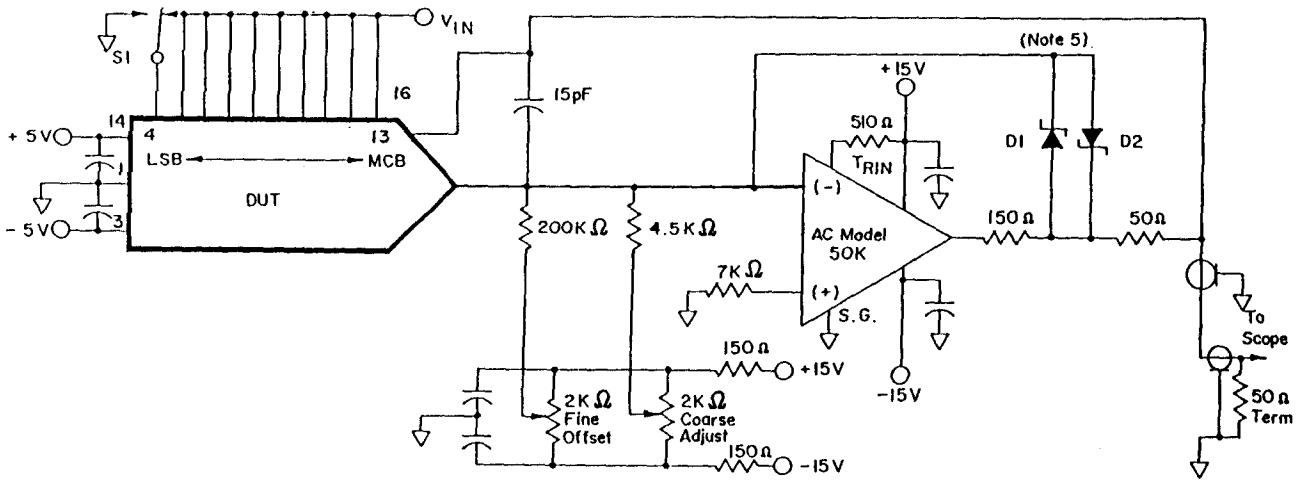

NOTES:
1. Unless otherwise defined, all capacitors are 47 μF tantalum paralleled with 0.1 μF ceramic.
2. Bandwidth of the oscilloscope shall be 50 MHz minimum; saturation of the preamp must be avoided. Use a voltage comparator preamp.
3. Adjust the coarse and fine offset controls to position the waveform final value on the oscilloscope center horizontal graticule.
4. While operating switch S-1, adjust the oscilloscope vertical gain for 1/2 LSB per cm.
5. D1 = D2 = MP 5082-2835 or equivalent.
6. All grounds must be separately connected to unipoint ground at device pin 1.

FIGURE 7. Test circuit for settling time.

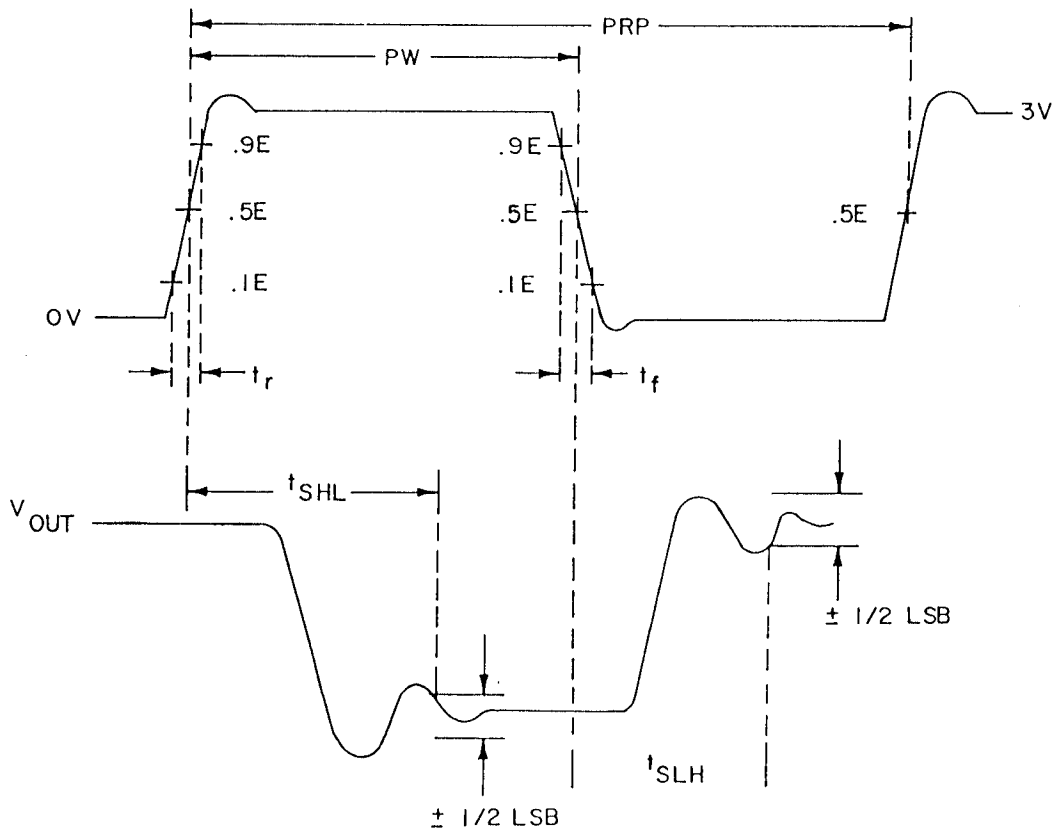

NOTE: PRP = 1.2 μs(min); PW = 600 ns(min)
$t_r = t_f \leq 10$ ns.

FIGURE 8. Waveforms for settling time tests (device 01).

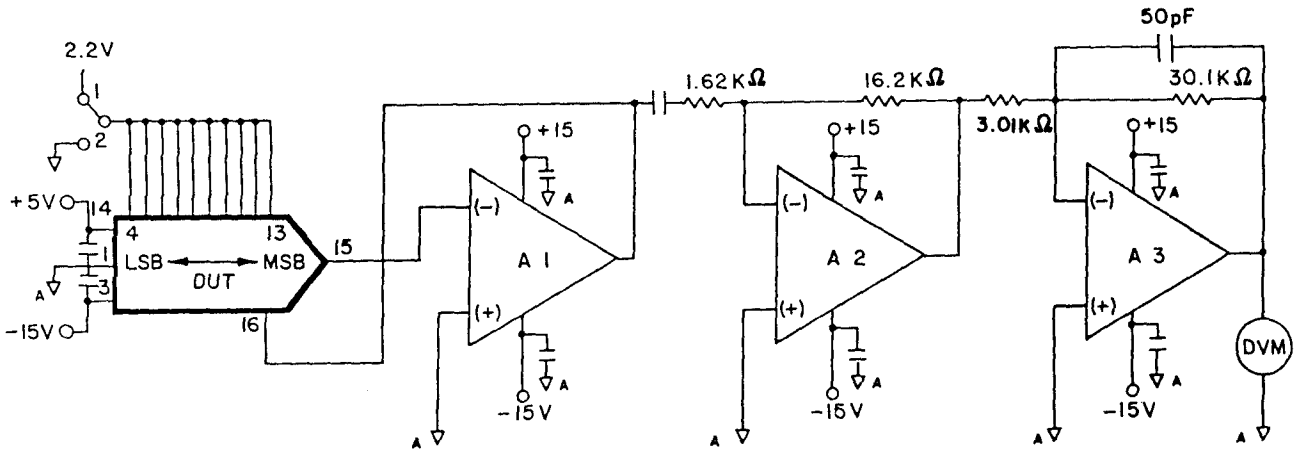

NOTES:

1. Unless otherwise stated, all capacitors are 47 µF tantalum paralleled with 0.1 µF ceramic.
2. The meter shall be true rms reading with a bandwidth greater than 100 kHz.
3. *A1, A2 and A3 shall* have a gain-bandwidth product greater than 5 MHz and input noise density less than 10 nV/$\sqrt{\text{Hz}}$.
4. All "A" point ground connections shall return to a single unipoint ground at device pin 1.
5. With S-1 in position 2, the measured rms noise voltage shall be less than *1.0 mV rms.* (N_0 for all bits off.)
6. With S-1 in position 1, the measured rms noise voltage shall be:

$$N_0 \text{ for DUT} = \sqrt{\frac{(N_0)^2 \text{ for all bits on} - (N_0)^2 \text{ for all bits off}}{100}}$$

FIGURE 9. Test circuit for noise tests.

TABLE III. Group A inspection.

Subgroup	Symbol	Test no.	Adapter pin numbers 5	6	7 thru 16	22 thru 37	Relays Energized	Measured pin No.	Value	Unit	Equation	Limits Min	Max	Unit
Calibration		1	Adjust P6 with all bits at 0 V				None	18	E1	µV	ECA1 = E1		450	µV
1 T_A = 25°C	I_{CC}	2	+15 V	-15 V	0000 0000 00	1111 1111 1111 1111	"	5	I1	mA	I_{CC} = I1 (Digital 0 = 0 V)	+2	+10	mA
	I_{EE}	3	"	"	"	"	"	6	I2	mA	I_{EE} = I2 (Digital 0 = 0 V)	-16	-2	mA
	V_{REF}	4	"	"	"	"	"	2	E2	V	V_{REF} = E2 I_{REF} = 2 mA	2.45	2.55	V
	I_{IL}	5	"	"	"	"	"	7	I3	µA	I_{IL} = I3 (Digital 0 = 0 V)	-100	+1	µA
	"	6	"	"	"	"	"	8	I4	"	I_{IL} = I4	"	"	"
	"	7	"	"	"	"	"	9	I5	"	I_{IL} = I5	"	"	"
	"	8	"	"	"	"	"	10	I6	"	I_{IL} = I6	"	"	"
	"	9	"	"	"	"	"	11	I7	"	I_{IL} = I7	"	"	"
	"	10	"	"	"	"	"	12	I8	"	I_{IL} = I8	"	"	"
	"	11	"	"	"	"	"	13	I9	"	I_{IL} = I9	"	"	"
	"	12	"	"	"	"	"	14	I10	"	I_{IL} = I10	"	"	"
	"	13	"	"	"	"	"	15	I11	"	I_{IL} = I11	"	"	"
	"	14	"	"	"	"	"	16	I12	"	I_{IL} = I12	"	"	"
	I_{IH}	15	"	"	1111 1111 11	"	"	7	I13	"	I_{IH} = I13 (Digital 1 = 15 V)	-1	100	"
	"	16	"	"	"	"	"	8	I14	"	I_{IH} = I14	"	"	"
	"	17	"	"	"	"	"	9	I15	"	I_{IH} = I15	"	"	"
	"	18	"	"	"	"	"	10	I16	"	I_{IH} = I16	"	"	"
	"	19	"	"	"	"	"	11	I17	"	I_{IH} = I17	"	"	"
	"	20	"	"	"	"	"	12	I18	"	I_{IH} = I18	"	"	"
	"	21	"	"	"	"	"	13	I19	"	I_{IH} = I19	"	"	"
	"	22	"	"	"	"	"	14	I20	"	I_{IH} = I20	"	"	"
	"	23	"	"	"	"	"	15	I21	"	I_{IH} = I21	"	"	"
	"	24	"	"	"	"	"	16	I22	"	I_{IH} = I22	"	"	"
	I_{FS1}	25	+5 V	"	"		"	18	E3	V	I_{FS1} = E3/1000	+1.5	+2.5	mA
	I_{FS2}	26	+15 V	"	"		"	"	E4	"	I_{FS2} = E4/1000	"	"	"
	G1	27	"	"	0000 0000 00	1111 1111 1111 1111	"	19	E5	"	G_1 = (E6-E5)(4096)/(14)(10)	-41.5	-40.5	V/V
		28	"	"	"	1111 1111 0001 1111	"	"	E6	"	G_1 is the error amplifier gain			
	I_{FS+}	29	+5 V	"	1111 1111 11	0000 0000 0000 0000	K1	18	E7	"	I_{FS+} = E7/1000	+1.5	+2.5	mA
	I_{FS-}	30	"	"	"	"	K1	"	E8	"	I_{FS-} = E8/1000	"	"	"
	$d_{IFS(+)}$	31	"	"	"		None	"	E9	"	V_{OC} = 0 V	-5	+5	µA
		32	"	"	"		"	"	E10	"	V_{OC} = +10 V, dIFS(+) = (E10-E9)/1000			
	$d_{IFS(-)}$	33	"	"	"		"	"	E11	"	V_{OC} = 0 V	"	"	"
		34	"	"	"		"	"	E12	"	V_{OC} = -2 V, dIFS(-) = (E12-E11)/1000			
	I_{ZS1}	35	"	"	0000 0000 00	1111 1111 1111 1111	K1	"	E13	"	I_{ZS1} = E13(1024)/E3	-0.5	+0.5	LSB
	I_{ZS2}	36	+15 V	"	"	"	"	"	E14	"	I_{ZS2} = E14(1024)/E4	"	"	"
	B_{POE}	37	"	"	"	"	"	19	E15	"	B_{POE} = E15/(G1)(9.7656E-3)	-5	+5	"

TABLE III. Group A inspection - Continued.

Subgroup	Symbol	Test no.	Adapter pin numbers: 5	6	7 thru 16	22 thru 37	Relays Energized	Measured pin: No.	Value	Unit	Equation	Limits: Min	Max	Unit
1 T_A = 25°C	B_{ZE}	38	+15 V	-15 V	1000 0000 00	1111 1111 1111 1111	None	19	E16	V	B_{ZE} = E16/(G1)(9.7656E-3)	-2.5	+2.5	LSB
	A_{E1}	39	+5 V	"	1111 1111 11 0000 0000 00	0000 0000 0011 1111 1111 1111 1111 1111	" "	21	E17 E18	" "	A_{E1} = 10[(E17-E18)/(G1)]	-.5	+.5	%FS
	A_{E2}	40	+15 V	"	1111 1111 11 0000 0000 00	0000 0000 0011 1111 1111 1111 1111 1111	" "	21	E19 E20	" "	A_{E2} = 10[(E19-E20)/(G1)]	"	"	"
	$+P_{SS1}$ $-P_{SS1}$	41 42 43	+4.5 V +5.0 V +5.5 V	" " "	1111 1111 11 " "	0000 0000 0011 1111 " "	" " "	19 " "	E21 E22 E23	" " "	$+P_{SS1}$ = ((E21-E22)/G1)(9.7656E-3)(10) $-P_{SS1}$ = ((E23-E22)/G1)(9.7656E-3)(10)	-.01 " "	+.01 " "	LSB 1/%PS "
	$+P_{SS2}$ $-P_{SS2}$	44 45 46	+13.5 V +15 V +16.5 V	" " "	" " "	" " "	" " "	" " "	E24 E25 E26	" " "	$+P_{SS2}$ = ((E24-E25)/G1)(9.7656E-3)(10) $+P_{SS2}$ = ((E26-E25)/G1)(9.7656E-3)(10)	" " "	" " "	" " "
	$-P_{SS1}$	47 48 49	+5 V " "	-13.5 V -15 V -16.5 V	" " "	" " "	" " "	" " "	E27 E28 E29	" " "	$-P_{SS1}$ = ((E27-E28)/G1)(9.7656E-3)(10) $-P_{SS1}$ = ((E29-E28)/G1)(9.7656E-3)(10)	-.025 " "	+.025 " "	" " "
	$-P_{SS2}$	50 51 52	+15 V " "	-10.8 V -12 V -13.2 V	" " "	" " "	" " "	" " "	E30 E31 E32	" " "	$-P_{SS2}$ = ((E30-E31)/G1)(9.7656E-3)(10) $-P_{SS2}$ = ((E32-E31)/G1)(9.7656E-3)(10)	" " "	" " "	" " "
	L_E	53	"	-15 V	0001 0000 00	1110 1111 1111 1111	"	"	E33	"	For each input code N calculate the corresponding linearity error in LSB.	-0.5	+0.5	LSB
	"	54	"	"	0010 0000 00	1101 1111 1111 1111	"	"	E34	"		"	"	"
	"	55	"	"	0011 0000 00	1100 1111 1111 1111	"	"	E35	"		"	"	"
	"	56	"	"	0100 0000 00	1011 1111 1111 1111	"	"	E36	"		"	"	"
	"	57	"	"	0101 0000 00	1010 1111 1111 1111	"	"	E37	"	L_E = ((EA/G1)+(N)(K)-(V_{OS}))/(9.7656E-3)	"	"	"
	"	58	"	"	0110 0000 00	1001 1111 1111 1111	"	"	E38	"		"	"	"
	"	59	"	"	0111 0000 00	1000 1111 1111 1111	"	"	E39	"	where	"	"	"
	"	60	"	"	1000 0000 00	0111 1111 1111 1111	"	"	E40	"	EA = measured value E33 through E53	"	"	"
	"	61	"	"	1001 0000 00	0110 1111 1111 1111	"	"	E41	"	G1 = error amplifier gain from step 28	"	"	"
	"	62	"	"	1010 0000 00	0101 1111 1111 1111	"	"	E42	"	N = DUT input digital code word in	"	"	"
	"	63	"	"	1011 0000 00	0100 1111 1111 1111	"	"	E43	"	decimal form. Thus for 10 bits	"	"	"
	"	64	"	"	1100 0000 00	0011 1111 1111 1111	"	"	E44	"	N = (A1)(2exp7)+(A2)(2exp6)+...	"	"	"
	"	65	"	"	1101 0000 00	0010 1111 1111 1111	"	"	E45	"	+(A10)(2exp0)	"	"	"
	"	66	"	"	1110 0000 00	0001 1111 1111 1111	"	"	E46	"	A1,A2, ... A10 are 0 or 1.	"	"	"
	"	67	"	"	1111 0000 00	0000 1111 1111 1111	"	"	E47	"	K = actual volts/count scale factor.	"	"	"
	"	68	"	"	0000 0000 01	1111 1111 1011 1111	"	"	E48	"	K = (V_{FS}-V_{OS})/1023	"	"	"
	"	69	"	"	0000 0000 10	1111 1111 0111 1111	"	"	E49	"	where V_{FS} = Value at E19	"	"	"
	"	70	"	"	0000 0001 00	1111 1110 1111 1111	"	"	E50	"	V_{OS} = Value at E20	"	"	"
	"	71	"	"	0000 0010 00	1111 1101 1111 1111	"	"	E51	"		"	"	"
	"	72	"	"	0000 0100 00	1111 1011 1111 1111	"	"	E52	"		"	"	"
	"	73	"	"	0000 1000 00	1111 0111 1111 1111	"	"	E53	"		"	"	"

TABLE III. Group A inspection - Continued.

Subgroup	Symbol	Test no.	Adapter pin numbers: 4	5	7 thru 16	22 thru 37	Relays Energized	Measured pin: No.	Value	Unit	Equation	Limits: Min	Max	Unit
1 T_A = 25°C	MCE1	74	+15 V	-15 V	0111 1111 11	1000 0000 0011 1111	None	19	E54	V	For each set of major carry codes N and N+1 calculate the associated error in LSB's as follows:	-1	+1	LSB
			"	"	1000 0000 00	0111 1111 1111 1111	"	"	E55	"		"	"	"
	MCE2	75	"	"	0011 1111 11	1100 0000 0011 1111	"	"	E56	"		"	"	"
			"	"	0100 0000 00	1011 1111 1111 1111	"	"	E57	"		"	"	"
	MCE3	76	"	"	0001 1111 11	1110 0000 0011 1111	"	"	E58	"	MCE = ((EB-EA)/G1)(9.7656E-3)	"	"	"
			"	"	0010 0000 00	1101 1111 1111 1111	"	"	E59	"		"	"	"
	MCE4	77	"	"	0000 1111 11	1111 0000 0011 1111	"	"	E60	"	where	"	"	"
			"	"	0001 0000 00	1110 1111 1111 1111	"	"	E61	"	EB = Measured value from E54, E56,	"	"	"
	MCE5	78	"	"	0000 0111 11	1111 1000 0011 1111	"	"	E62	"	E58, etc.	"	"	"
			"	"	0000 1000 00	1111 0111 1111 1111	"	"	E63	"	EA = Measured value from E55, E57,	"	"	"
	MCE6	79	"	"	0000 0011 11	1111 1100 0011 1111	"	"	E64	"	E59, etc.	"	"	"
			"	"	0000 0100 00	1111 1011 1111 1111	"	"	E65	"		"	"	"
	MCE7	80	"	"	0000 0001 11	1111 1110 0011 1111	"	"	E66	"		"	"	"
			"	"	0000 0010 00	1111 1101 1111 1111	"	"	E67	"		"	"	"
	MCE8	81	"	"	0000 0000 11	1111 1111 1111 1111	"	"	E68	"		"	"	"
			"	"	0000 0001 00	1111 1110 1111 1111	"	"	E69	"		"	"	"
	MCE9	82	"	"	0000 0000 01	1111 1111 1011 1111	"	"	E70	"		"	"	"
			"	"	0000 0000 10	1111 1111 0111 1111	"	"	E71	"		"	"	"
	MCE10	83	"	"	0000 0000 00	1111 1111 1111 1111	"	"	E72	"		"	"	"
			"	"	0000 0000 01	1111 1111 1011 1111	"	"	E73	"		"	"	"
Calibration		84	Adjust P6 with all bits at 0 V				"	18	E74	µV	Ecal = E74		450	µV

Subgroup	Symbol	Test no.	Adapter pin numbers: 5	6	7 thru 16	22 thru 37	Relays Energized	Measured pin: No.	Value	Unit	Equation	Limits: Min	Max	Unit
2 T_A = 125°C	I_{CC}	85	+15 V	-15 V	0000 0000 00	1111 1111 1111 1111	None	5	I23	mA	I_{CC} = I23 (Digital 0 = 0 V)	+2	+10	mA
	I_{EE}	86	"	"	"	"	"	6	I24	mA	I_{EE} = I24 (Digital 0 = 0 V)	-16	-2	mA
	V_{REF}	87	"	"	"	"	"	2	E75	V	V_{REF} = E75 I_{REF} = 2 mA	2.45	2.55	V
	I_{IL}	88	"	"	"	"	"	7	I25	µA	I_{IL} = I25 (Digital 0 = 0 V)	-100	+1	µA
		89	"	"	"	"	"	8	I26	"	I_{IL} = I26	"	"	"
	"	90	"	"	"	"	"	9	I27	"	I_{IL} = I27	"	"	"
	"	91	"	"	"	"	"	10	I28	"	I_{IL} = I28	"	"	"
	"	92	"	"	"	"	"	11	I29	"	I_{IL} = I29	"	"	"
	"	93	"	"	"	"	"	12	I30	"	I_{IL} = I30	"	"	"
	"	94	"	"	"	"	"	13	I31	"	I_{IL} = I31	"	"	"
	"	95	"	"	"	"	"	14	I32	"	I_{IL} = I32	"	"	"
	"	96	"	"	"	"	"	15	I33	"	I_{IL} = I33	"	"	"
	"	97	"	"	"	"	"	16	I34	"	I_{IL} = I34	"	"	"
	I_{IH}	98	"	"	1111 1111 11	"	"	7	I35	"	I_{IH} = I35 (Digital 1 = 15 V)	-1	100	"
		99	"	"	"	"	"	8	I36	"	I_{IH} = I36	"	"	"
	"	100	"	"	"	"	"	9	I37	"	I_{IH} = I37	"	"	"
	"	101	"	"	"	"	"	10	I38	"	I_{IH} = I38	"	"	"
	"	102	"	"	"	"	"	11	I39	"	I_{IH} = I39	"	"	"
	"	103	"	"	"	"	"	12	I40	"	I_{IH} = I40	"	"	"
	"	104	"	"	"	"	"	13	I41	"	I_{IH} = I41	"	"	"
	"	105	"	"	"	"	"	14	I42	"	I_{IH} = I42	"	"	"
	"	106	"	"	"	"	"	15	I43	"	I_{IH} = I43	"	"	"
	"	107	"	"	"	"	"	16	I44	"	I_{IH} = I44	"	"	"

TABLE III. Group A inspection - Continued.

Subgroup	Symbol	Test no.	Adapter pin numbers				Relays Energized	Measured pin			Equation	Limits		Unit
			5	6	7 thru 16	22 thru 37		No.	Value	Unit		Min	Max	
2 T_A = 125°C	I_{FS1} I_{FS2}	108 109	+5 V +15 V	-15 V "	1111 1111 11 "		None "	18 "	E76 E77	V "	I_{FS1} = E76/1000 I_{FS2} = E77/1000	+1.5 "	+2.5 "	mA "
	G1	110 111	" "	" "	0000 0000 00 "	1111 1111 1111 1111 1111 1111 0001 1111	" "	19 "	E78 E79	" "	G1 = (E79-E78)(4096)/(14)(10) G1 is the error amplifier gain	-41.5	-40.5	V/V
	I_{FS+}	112	+5 V	"	1111 1111 11	0000 0000 0000 0000	K1	18	E80	"	I_{FS+} = E80/1000	+1.5	+2.5	mA
	I_{FS-}	113	"	"	"	"	K1	"	E81	"	I_{FS-} = E81/1000	"	"	"
	$d_{IFS(+)}$	114 115	" "	" "	" "		None "	" "	E82 E83	" "	V_{OC} = 0 V V_{OC} = +10 V $d_{IFS(+)}$ = (E83-E82)/1000	-5 "	+5 "	µA "
	$d_{IFS(-)}$	116 117	" "	" "	" "		" "	" "	E84 E85	" "	V_{OC} = 0 V V_{OC} = -2 V $d_{IFS(-)}$ = (E85-E84)/1000	-5 "	+5 "	" "
	d_{IZS2}/dT	118	+15 V	"	0000 0000 00	1111 1111 1111 1111	K1	"	E86	"	d_{IZS2}/dT = (E86-E14)(1024)/(E77-E4)(100)	-10	+10	mLSB /°C
	d_{BPOE}/dT	119	"	"	0000 0000 00	1111 1111 1111 1111	K1	19	E87	"	d_{BPOE}/dT = (E87-E15)/(G1)(9.7656E-1)	-60	+60	"
	d_{BZE}/dT	120	"	"	1000 0000 00	1111 1111 1111 1111	None	19	E88	"	d_{BZE}/dT = (E88-E16)/(G1)(9.7656E-1)	-20	+20	"
	d_{AE2}/dT	121	"	"	1111 1111 11 0000 0000 00	0000 0000 0011 1111 1111 1111 1111 1111	"	21	E89 E90	"	d_{AE2}/dT = .1[(E89-E90)-(E19-E20)]/(G1)	-.006	+.006	%/°C
	$+P_{SS1}$ $-P_{SS1}$	122 123 124	+4.5 V +5.0 V +5.5 V	" " "	1111 1111 11 " "	0000 0000 0011 1111 " "	" " "	19 " "	E91 E92 E93	" " "	$+P_{SS1}$ = ((E91-E92)/G1)(9.7656E-3)(10) $-P_{SS1}$ = ((E93-E92)/G1)(9.7656E-3)(10)	-.02 " "	+.02 " "	LSB /%PS "
	$+P_{SS2}$ $-P_{SS2}$	125 126 127	+13.5 V +15 V +16.5 V	" " "	" " "	" " "	" " "	" " "	E94 E95 E96	" " "	$+P_{SS2}$ = ((E94-E95)/G1)(9.7656E-3)(10) $+P_{SS2}$ = ((E96-E95)/G1)(9.7656E-3)(10)	" " "	" " "	" " "
	$-P_{SS1}$	128 129 130	+5 V " "	-13.5 V -15 V -16.5 V	" " "	" " "	" " "	" " "	E97 E98 E99	" " "	$-P_{SS1}$ = ((E97-E98)/G1)(9.7656E-3)(10) $-P_{SS1}$ = ((E99-E98)/G1)(9.7656E-3)(10)	-.05 " "	+.05 " "	" " "
	$-P_{SS2}$	131 132 133	+15 V " "	-10.8 V -12 V -13.2 V	" " "	" " "	" " "	" " "	E100 E101 E102	" " "	$-P_{SS2}$ = ((E100-E101)/G1)(9.7656E-3)(10) $-P_{SS2}$ = ((E102-E101)/G1)(9.7656E-3)(10)	" " "	" " "	" " "

TABLE III. Group A inspection - Continued.

Subgroup	Symbol	Test no.	Adapter pin numbers 5	6	7 thru 16	22 thru 37	Relays Energized	Measured pin No.	Value	Unit	Equation	Limits Min	Max	Unit
2 T_A = +125°C	L_E	134	+15 V	-15 V	0001 0000 00	1110 1111 1111 1111	None	19	E103	V	For each input code N calculate the corresponding linearity error in LSB.	-0.5	+0.5	LSB
	"	135	"	"	0010 0000 00	1101 1111 1111 1111	"	"	E104	"		"	"	"
	"	136	"	"	0011 0000 00	1100 1111 1111 1111	"	"	E105	"		"	"	"
	"	137	"	"	0100 0000 00	1011 1111 1111 1111	"	"	E106	"		"	"	"
	"	138	"	"	0101 0000 00	1010 1111 1111 1111	"	"	E107	"	L_E = ((EA/G1)+(N)(K)-(V_{OS}))/(9.7656E-3)	"	"	"
	"	139	"	"	0110 0000 00	1001 1111 1111 1111	"	"	E108	"		"	"	"
	"	140	"	"	0111 0000 00	1000 1111 1111 1111	"	"	E109	"	where	"	"	"
	"	141	"	"	1000 0000 00	0111 1111 1111 1111	"	"	E110	"	EA = measured value E103 through E123	"	"	"
	"	142	"	"	1001 0000 00	0110 1111 1111 1111	"	"	E111	"	G1 = error amplifier gain from step 111	"	"	"
	"	143	"	"	1010 0000 00	0101 1111 1111 1111	"	"	E112	"	N = DUT input digital code word in	"	"	"
	"	144	"	"	1011 0000 00	0100 1111 1111 1111	"	"	E113	"	decimal form. Thus for 10 bits	"	"	"
	"	145	"	"	1100 0000 00	0011 1111 1111 1111	"	"	E114	"	N = (A1)(2exp7)+(A2)(2exp6)+...	"	"	"
	"	146	"	"	1101 0000 00	0010 1111 1111 1111	"	"	E115	"	+(A10)(2exp0)	"	"	"
	"	147	"	"	1110 0000 00	0001 1111 1111 1111	"	"	E116	"	A1,A2, ... A10 are 0 or 1.	"	"	"
	"	148	"	"	1111 0000 00	0000 1111 1111 1111	"	"	E117	"	K = actual volts/count scale factor.	"	"	"
	"	149	"	"	0000 0000 01	1111 1111 1011 1111	"	"	E118	"	K = (V_{FS}-V_{OS})/1023	"	"	"
	"	150	"	"	0000 0000 10	1111 1111 0111 1111	"	"	E119	"	where V_{FS} = Value at E89	"	"	"
	"	151	"	"	0000 0001 00	1111 1110 1111 1111	"	"	E120	"	V_{OS} = Value at E90	"	"	"
	"	152	"	"	0000 0010 00	1111 1101 1111 1111	"	"	E121	"		"	"	"
	"	153	"	"	0000 0100 00	1111 1011 1111 1111	"	"	E122	"		"	"	"
	"	154	"	"	0000 1000 00	1111 0111 1111 1111	"	"	E123	"		"	"	"

Subgroup	Symbol	Test no.	Adapter pin numbers 4	5	7 thru 16	22 thru 37	Relays Energized	Measured pin No.	Value	Unit	Equation	Limits Min	Max	Unit
2 T_A = +125°C	MCE1	155	+15 V	-15 V	0111 1111 11	1000 0000 0011 1111	None	19	E124	V	For each set of major carry codes N and N+1 calculate the associated error in LSB's as follows:	-1	+1	LSB
			"	"	1000 0000 00	0111 1111 1111 1111	"	"	E125	"		"	"	"
	MCE2	156	"	"	0011 1111 11	1100 0000 0011 1111	"	"	E126	"		"	"	"
			"	"	0100 0000 00	1011 1111 1111 1111	"	"	E127	"		"	"	"
	MCE3	157	"	"	0001 1111 11	1110 0000 0011 1111	"	"	E128	"	MCE = ((EB-EA)/G1)(9.7656E-3)	"	"	"
			"	"	0010 0000 00	1101 1111 1111 1111	"	"	E129	"		"	"	"
	MCE4	158	"	"	0000 1111 11	1111 0000 0011 1111	"	"	E130	"	where	"	"	"
			"	"	0001 0000 00	1110 1111 1111 1111	"	"	E131	"	EB = Measured value from E124, E126,	"	"	"
	MCE5	159	"	"	0000 0111 11	1111 1000 0011 1111	"	"	E132	"	E128, etc.	"	"	"
			"	"	0000 1000 00	1111 0111 1111 1111	"	"	E133	"	EA = Measured value from E125, E127,	"	"	"
	MCE6	160	"	"	0000 0011 11	1111 1100 0011 1111	"	"	E134	"	E129, etc.	"	"	"
			"	"	0000 0100 00	1111 1011 1111 1111	"	"	E135	"		"	"	"
	MCE7	161	"	"	0000 0001 11	1111 1110 0011 1111	"	"	E136	"		"	"	"
			"	"	0000 0010 00	1111 1101 1111 1111	"	"	E137	"		"	"	"
	MCE8	162	"	"	0000 0000 11	1111 1111 1111 1111	"	"	E138	"		"	"	"
			"	"	0000 0001 00	1111 1110 1111 1111	"	"	E139	"		"	"	"
	MCE9	163	"	"	0000 0000 01	1111 1111 1011 1111	"	"	E140	"		"	"	"
			"	"	0000 0000 10	1111 1111 0111 1111	"	"	E141	"		"	"	"
	MCE10	164	"	"	0000 0000 00	1111 1111 1111 1111	"	"	E142	"		"	"	"
			"	"	0000 0000 01	1111 1111 1011 1111	"	"	E143	"		"	"	"
Calibration		165	Adjust P6 with all bits at 0 V.				"	18	E144	µV	Ecal = E144		450	µV

Subgroup	Symbol	Test no.	Adapter pin numbers 5	6	7 thru 16	22 thru 37	Relays Energized	Measured pin No.	Value	Unit	Equation	Limits Min	Max	Unit
3 T_A = -55°C	I_{CC}	166	+15 V	-15 V	0000 0000 00	1111 1111 1111 1111	None	5	I45	mA	I_{CC} = I45 (Digital 0 = 0 V)	+2	+10	mA
	I_{EE}	167	"	"	"	"	"	6	I46	mA	I_{EE} = I46 (Digital 0 = 0 V)	-16	-2	mA
	V_{REF}	168	"	"	"	"	"	2	E145	V	V_{REF} = E145 I_{REF} = 2 mA	2.45	2.55	V

TABLE III. Group A inspection - Continued.

Subgroup	Symbol	Test no.	Adapter pin numbers				Relays Energized	Measured pin			Equation	Limits		Unit
			5	6	7 thru 16	22 thru 37		No.	Value	Unit		Min	Max	
3 T_A = -55°C	I_{IL}	169	+15 V	-15 V	0000 0000 00	1111 1111 1111 1111	None	7	I47	µA	I_{IL} = I47 (Digital 0 = 0 V)	-100	+1	µA
	"	170	"	"	"	"	"	8	I48	"	I_{IL} = I48	"	"	"
	"	171	"	"	"	"	"	9	I49	"	I_{IL} = I49	"	"	"
	"	172	"	"	"	"	"	10	I50	"	I_{IL} = I50	"	"	"
	"	173	"	"	"	"	"	11	I51	"	I_{IL} = I51	"	"	"
	"	174	"	"	"	"	"	12	I52	"	I_{IL} = I52	"	"	"
	"	175	"	"	"	"	"	13	I53	"	I_{IL} = I53	"	"	"
	"	176	"	"	"	"	"	14	I54	"	I_{IL} = I54	"	"	"
	"	177	"	"	"	"	"	15	I55	"	I_{IL} = I55	"	"	"
	"	178	"	"	"	"	"	16	I56	"	I_{IL} = I56	"	"	"
	I_{IH}	179	"	"	1111 1111 11	"	"	7	I57	"	I_{IH} = I57 (Digital 1 = 15 V)	-1	100	"
	"	180	"	"	"	"	"	8	I58	"	I_{IH} = I58	"	"	"
	"	181	"	"	"	"	"	9	I59	"	I_{IH} = I59	"	"	"
	"	182	"	"	"	"	"	10	I60	"	I_{IH} = I60	"	"	"
	"	183	"	"	"	"	"	11	I61	"	I_{IH} = I61	"	"	"
	"	184	"	"	"	"	"	12	I62	"	I_{IH} = I62	"	"	"
	"	185	"	"	"	"	"	13	I63	"	I_{IH} = I63	"	"	"
	"	186	"	"	"	"	"	14	I64	"	I_{IH} = I64	"	"	"
	"	187	"	"	"	"	"	15	I65	"	I_{IH} = I65	"	"	"
	"	188	"	"	"	"	"	16	I66	"	I_{IH} = I66	"	"	"
	I_{FS1}	189	+5 V	"	"		"	18	E146	V	I_{FS1} = E146/1000	+1.5	+2.5	mA
	I_{FS2}	190	+15 V	"	"		"	"	E147	"	I_{FS2} = E147/1000	"	"	"
	G1	191	"	"	0000 0000 00	1111 1111 1111 1111	"	21	E148	"	G1 = (E149-E148)(4096)/(14)(10)	-41.5	-40.5	V/V
		192	"	"	"	1111 1111 0001 1111	"	"	E149	"	G1 is the error amplifier gain			
	I_{FS+}	193	"	"	1111 1111 11	0000 0000 0000 0000	K1	18	E150	"	I_{FS+} = E150/1000	+1.5	+2.5	mA
	I_{FS-}	194	"	"	"	"	"	"	E151	"	I_{FS-} = E151/1000	"	"	"
	$d_{IFS(+)}$	195	"	"	"		None	"	E152	"	V_{OC} = 0 V	-5	+5	µA
		196	"	"	"		"	"	E153	"	V_{OC} = +10 V $d_{IFS(+)}$ = (E153-E152)/1000	"	"	"
	$d_{IFS(-)}$	197	"	"	"		"	"	E154	"	V_{OC} = 0 V	"	"	"
		198	"	"	"		"	"	E155	"	V_{OC} = -2 V $d_{IFS(-)}$ = (E155-E154)/1000	"	"	"
	d_{IZS2}/dT	199	+15 V	"	0000 0000 00	1111 1111 1111 1111	K1	"	E156	"	d_{IZS2}/dT = (E156-E14)(1024)/(E147-E4)(80)	-10	+10	mLSB /°C
	d_{BPOE}/dT	200	"	"	"	"	"	19	E157	"	d_{BPOE}/dT = (E157-E15)/(G1)(9.7656E-3)(80)	-60	+60	"
	d_{BZE}/dT	201	"	"	1000 0000 00	1111 1111 1111 1111	K1	19	E158	"	d_{BZE}/dT = (E158-E16)/(G1)(9.7656E-3)(80)	-20	+20	"
	d_{AE2}/dT	202	"	"	1111 1111 11 0000 0000 00	0000 0000 0011 1111 1111 1111 1111 1111	None	21	E159 E160	"	d_{AE2}/dT = .125 (E159-E160)-(E19-E20) /(G1)	-.006	+.006	%/°C

TABLE III. Group A inspection - Continued.

Subgroup	Symbol	Test no.	Adapter pin numbers: 5	6	7 thru 16	22 thru 37	Relays Energized	Measured pin: No.	Value	Unit	Equation	Limits: Min	Max	Unit
3 T_A = -55°C	$+P_{SS1}$	203	+4.5 V	-15 V	1111 1111 11	0000 0000 0011 1111	None	19	E161	V	$+P_{SS1}$ = ((E161-E162)/G1)(9.7656E-3)(10)	-.02	+.02	LSB
		204	+5.0 V	"	"	"	"	"	E162	"		"	"	/%PS
	$-P_{SS1}$	205	+5.5 V	"	"	"	"	"	E163	"	$-P_{SS1}$ = ((E163-E162)/G1)(9.7656E-3)(10)	"	"	"
	$+P_{SS2}$	206	+13.5 V	"	"	"	"	"	E164	"	$+P_{SS2}$ = ((E164-E165)/G1)(9.7656E-3)(10)	"	"	"
		207	+15 V	"	"	"	"	"	E165	"		"	"	"
	$+P_{SS2}$	208	+16.5 V	"	"	"	"	"	E166	"	$+P_{SS2}$ = ((E166-E165)/G1)(9.7656E-3)(10)	"	"	"
	$-P_{SS1}$	209	+5 V	-13.5 V	"	"	"	"	E167	"	$-P_{SS1}$ = ((E167-E168)/G1)(9.7656E-3)(10)	-.05	+.05	"
		210	"	-15 V	"	"	"	"	E168	"		"	"	"
		211	"	-16.5 V	"	"	"	"	E169	"	$-P_{SS1}$ = ((E169-E168)/G1)(9.7656E-3)(10)	"	"	"
	$-P_{SS2}$	212	+15 V	-10.8 V	"	"	"	"	E170	"	$-P_{SS2}$ = ((E170-E171)/G1)(9.7656E-3)(10)	"	"	"
		213	"	-12 V	"	"	"	"	E171	"		"	"	"
		214	"	-13.2 V	"	"	"	"	E172	"	$-P_{SS2}$ = ((E172-E171)/G1)(9.7656E-3)(10)	"	"	"
	L_E	215	"	-15 V	0001 0000 00	1110 1111 1111 1111	"	"	E173	"	For each input code N calculate the corresponding linearity error in LSB.	-0.5	+0.5	LSB
	"	216	"	"	0010 0000 00	1101 1111 1111 1111	"	"	E174	"		"	"	"
	"	217	"	"	0011 0000 00	1100 1111 1111 1111	"	"	E175	"		"	"	"
	"	218	"	"	0100 0000 00	1011 1111 1111 1111	"	"	E176	"		"	"	"
	"	219	"	"	0101 0000 00	1010 1111 1111 1111	"	"	E177	"	L_E = ((EA/G1)+(N)(K)-(V_{OS}))/(9.7656E-3)	"	"	"
	"	220	"	"	0110 0000 00	1001 1111 1111 1111	"	"	E178	"		"	"	"
	"	221	"	"	0111 0000 00	1000 1111 1111 1111	"	"	E179	"	where	"	"	"
	"	222	"	"	1000 0000 00	0111 1111 1111 1111	"	"	E180	"	EA = measured value E173 through E193	"	"	"
	"	223	"	"	1001 0000 00	0110 1111 1111 1111	"	"	E181	"	G1 = error amplifier gain from step 192	"	"	"
	"	224	"	"	1010 0000 00	0101 1111 1111 1111	"	"	E182	"	N = DUT input digital code word in	"	"	"
	"	225	"	"	1011 0000 00	0100 1111 1111 1111	"	"	E183	"	decimal form. Thus for 10 bits	"	"	"
	"	226	"	"	1100 0000 00	0011 1111 1111 1111	"	"	E184	"	N = (A1)(2exp7)+(A2)(2exp6)+...	"	"	"
	"	227	"	"	1101 0000 00	0010 1111 1111 1111	"	"	E185	"	+(A10)(2exp0)	"	"	"
	"	228	"	"	1110 0000 00	0001 1111 1111 1111	"	"	E186	"	A1,A2, ... A10 are 0 or 1.	"	"	"
	"	229	"	"	1111 0000 00	0000 1111 1111 1111	"	"	E187	"	K = actual volts/count scale factor.	"	"	"
	"	230	"	"	0000 0000 01	1111 1111 1011 1111	"	"	E188	"	K = (V_{FS}-V_{OS})/1023	"	"	"
	"	231	"	"	0000 0000 10	1111 1111 0111 1111	"	"	E189	"	where V_{FS} = Value at E159	"	"	"
	"	232	"	"	0000 0001 00	1111 1110 1111 1111	"	"	E190	"	V_{OS} = Value at E160	"	"	"
	"	233	"	"	0000 0010 00	1111 1101 1111 1111	"	"	E191	"		"	"	"
	"	234	"	"	0000 0100 00	1111 1011 1111 1111	"	"	E192	"		"	"	"
	"	235	"	"	0000 1000 00	1111 0111 1111 1111	"	"	E193	"		"	"	"

Subgroup	Symbol	Test no.	Adapter pin numbers: 4	5	7 thru 16	22 thru 37	Relays Energized	Measured pin: No.	Value	Unit	Equation	Limits: Min	Max	Unit
3 T_A = -55°C	MCE1	236	"	"	0111 1111 11	1000 0000 0011 1111	None	19	E194	V	For each set of major carry codes N and N+1 calculate the associated error in LSB's as follows:	-1	+1	LSB
			"	"	1000 0000 00	0111 1111 1111 1111	"	"	E195	"		"	"	"
	MCE2	237	"	"	0011 1111 11	1100 0000 0011 1111	"	"	E196	"		"	"	"
			"	"	0100 0000 00	1011 1111 1111 1111	"	"	E197	"		"	"	"
	MCE3	238	"	"	0001 1111 11	1110 0000 0011 1111	"	"	E198	"	MCE = ((EB-EA)/G1)(9.7656E-3)	"	"	"
			"	"	0010 0000 00	1101 1111 1111 1111	"	"	E199	"		"	"	"
	MCE4	239	"	"	0000 1111 11	1111 0000 0011 1111	"	"	E200	"	where	"	"	"
			"	"	0001 0000 00	1110 1111 1111 1111	"	"	E201	"	EB = Measured value from E194, E196,	"	"	"
	MCE5	240	"	"	0000 0111 11	1111 1000 0011 1111	"	"	E202	"	E198, etc.	"	"	"
			"	"	0000 1000 00	1111 0111 1111 1111	"	"	E203	"	EA = Measured value from E195, E197,	"	"	"
	MCE6	241	"	"	0000 0011 11	1111 1100 0011 1111	"	"	E204	"	E199, etc.	"	"	"
			"	"	0000 0100 00	1111 1011 1111 1111	"	"	E205	"		"	"	"
	MCE7	242	"	"	0000 0001 11	1111 1110 0011 1111	"	"	E206	"		"	"	"
			"	"	0000 0010 00	1111 1101 1111 1111	"	"	E207	"		"	"	"
	MCE8	243	"	"	0000 0000 11	1111 1111 1111 1111	"	"	E208	"		"	"	"
			"	"	0000 0001 00	1111 1110 1111 1111	"	"	E209	"		"	"	"
	MCE9	244	"	"	0000 0000 01	1111 1111 1011 1111	"	"	E210	"		"	"	"
			"	"	0000 0000 10	1111 1111 0111 1111	"	"	E211	"		"	"	"
	MCE10	245	"	"	0000 0000 00	1111 1111 1111 1111	"	"	E212	"		"	"	"
			"	"	0000 0000 01	1111 1111 1011 1111	"	"	E213	"		"	"	"

TABLE III. Group A inspection - Continued.

Subgroup	Symbol	Test no.	Adapter pin numbers				Relays Energized	Measured pin			Equation	Limits		Unit
			4	5	7 thru 16	22 thru 37		No.	Value	Unit		Min	Max	
7 T_A = 25°C	L_E	246	"	"	0000 0000 01	1111 1111 1011 1111	None	19	E414	V	For each input code N calculate the corresponding linearity error in LSB.	-0.5	+0.5	LSB
	"	247	"	"	0000 0000 10	1111 1111 0111 1111	"	"	E415	"		"	"	"
	"	248	"	"	0000 0001 00	1111 1110 1111 1111	"	"	E416	"		"	"	"
	"		"	"	---- ---- --	---- ---- ---- ----	"	"	E...	"		"	"	"
	"		"	"	---- ---- --	---- ---- ---- ----	"	"	E...	"	$L_E = 10((EA/G1)+(N)(K)-V_{OS}))$	"	"	"
	"	1265	"	"	1111 1111 00	0000 0000 1111 1111	"	"	E1427	"		"	"	"
	"	1266	"	"	1111 1111 01	0000 0000 1011 1111	"	"	E1428	"	where	"	"	"
	"	1267	"	"	1111 1111 10	0000 0000 0111 1111	"	"	E1429	"	EA = measured value E414 through E1429	"	"	"
					This subgroup checks all digital input codes, except zero code (V_{OS}) and full-scale code (V_{FS}) which were determined in test no. 40 V_{OS} = E20 V_{FS} = E19						G1 = error amplifier gain from step 27,28 N = DUT input digital code word in decimal form. Thus for 10 bits N = (A1)(2exp7)+(A2)(2exp6)+... +(A10)(2exp0) A1,A2...A10 are 0 or 1. K = actual volts/count scale factor. K = (E20-E19)/1023			
8 T_A = +125°C	L_E	1268 thru 2289	Same tests, terminal conditions, and limits as for subgroup 7, tests 246 thru 1267 except T_A = 125°C. V_{OS} and V_{FS} are the values determined in subgroup 2.									-0.5	+0.5	LSB
8 T_A = -55°C	L_E	2290 thru 3311	Same tests, terminal conditions, and limits as for subgroup 7, tests 246 thru 1267 except T_A = -55°C. V_{OS} and V_{FS} are the values determined in subgroup 3.									-0.5	+0.5	LSB
12 T_A = 25°C	t_{SLH}	3312	All digital inputs switched simultaneously from logic low to logic high. For each device type output settling is to within 1/2 LSB of the rated accuracy. See figures 7 and 8.					6	t1	ns	t_{SLH} = t1		500	ns
	t_{SHL}	3313	All digital inputs switched simultaneously from logic high to logic low. For each device type output settling is to within 1/2 LSB of the rated accuracy. See figures 7 and 8.					6	t2	ns	t_{SHL} = t2		500	ns
	N_0	3314	V_{CC} = +5 V; V_{EE} = -15 V All digital inputs = +2.2 V See figure 9.					6	E1430	µV rms	N_0 = E1430/100		160	µV rms

4.4.3 Group C inspection. Group C inspection shall be in accordance with table III of method 5005 of MIL-STD-883 and as follows:

a. End-point electrical parameters shall be as specified in table II herein. Delta limits shall apply only to subgroup 1 of group C inspection for class B devices.

b. Steady-state life test (method 1005 of MIL-STD-883) conditions:

1. Test condition A, using the circuit shown on figure 5; or test condition D, using the circuit shown on figure 4; or test condition F, using the circuit shown on figure 5.

2. T_A = 125°C minimum.

3. Test duration: 1000 hours, except as permitted by appendix B of MIL-M-38510 and method 1005 of MIL-STD-883.

4.4.4 Group D inspection. Group D inspection shall be in accordance with table IV of method 5005 of MIL-STD-883. End-point electrical tests shall be as specified in table II herein.

4.4.5 Inspection of packaging. Inspection of packaging shall be in accordance with MIL-M-38510.

4.5 Methods of inspection. Methods of inspection shall be as specified in the appropriate tables. Electrical test circuits as prescribed herein or in the referenced test methods of MIL-STD-883 shall be acceptable. Other test circuits shall require the approval of the qualifying activity.

4.5.1 Voltage and current. All voltage values given are referenced to the ground terminal of the device under test (DUT). Current values given are for conventional current and are positive when flowing into the referenced terminal.

4.5.2 Life test and burn-in cooldown procedure. When devices are measured at +25°C following application of the steady-state life or burn-in test condition, they shall be cooled to within +10°C of their power stable condition at room temperature prior to removal of the bias.

TABLE IV. Group C delta limits at 25°C.

Parameter	Min	Max	Unit
IZS2	-0.1	+0.1	LSB
AE2	-0.1	+0.1	%
BPOE	-1.0	+1.0	LSB

5. PACKAGING

5.1 Packaging requirements. The requirements for packaging shall be in accordance with MIL-M-38510.

6. NOTES

6.1 Intended use. Microcircuits conforming to this specification are intended for original equipment design applications and logistic support of existing equipment.

6.2 Ordering data. The acquisition document shall specify the following:

a. Complete part number (see 1.2).

b. Requirements for delivery of one copy of the quality conformance inspection data pertinent to the device inspection lot to be supplied with each shipment by the device manufacturer, if applicable.

c. Requirements for certificate of compliance, if applicable.

d. Requirements for notification of change of product or process to the contracting activity in addition to notification to the qualifying activity, if applicable.

e. Requirements for failure analysis (including required test condition of method 5003 of MIL-STD-883), corrective action, and reporting of results, if applicable.

f. Requirements for product assurance options.

g. Requirements for special lead lengths or lead forming, if applicable. These requirements shall not affect the part number.

h. Requirements for "JAN" marking.

6.3 Abbreviations, symbols, and definitions. The abbreviations, symbols, and definitions used herein are defined in MIL-M-38510, MIL-STD-1331, and as follows:

DLE	Differential linearity error is the difference between the actual separation of two adjacent output levels and the ideal separation of two adjacent output levels. It is generally expressed in LSB (i.e. 1 LSB).
MCE	The major carry error is the differential linearity error between the output levels corresponding to the digital code word defined by turning one bit on and all other bits off and the preceding adjacent digital code word. It is expressed in LSB.
CMOS	Complementary metal oxide semiconductor.
V_{CC}	Positive supply voltage (usually +15 V).
V_{EE}	Negative supply voltage (usually -15 V).
GND	Ground zero growth potential.
V_{IL}	Digital low state input voltage.
V_{IH}	Digital high state input voltage.
MSB	Most significant digital input bit.
BIT1	Same as MSB = full-scale/2.
BIT2	Second most significant bit = full-scale/4.
LSB	Least significant bit = full-scale/2 expN.
BITN	Same as LSB for an N-bit converter.
I_{OUT}	Sum of all R-2R ladder currents going through VIH commanded switches.

RF- - - - - - - - - - - - - - - - - - Feedback resistor for an external op amp.

I_{CC} - - - - - - - - - - - - - - - - - Current supplied to the V_{CC} terminal of the DUT for a given supply voltage (usually +15 V).

I_{EE} - - - - - - - - - - - - - - - - - Current supplied to the V_{EE} terminal of the DUT for a given supply voltage (usually -15 V).

6.4 Logistic support. Lead materials and finishes (see 3.3) are interchangeable. Unless otherwise specified, microcircuits acquired for Government logistic support will be acquired to device class B (see 1.2.2), lead material and finish C (see 3.3). Longer length leads and lead forming shall not affect the part number.

6.5 Substitutability. The cross-reference information below is presented for the convenience of users. Microcircuits covered by this specification will functionally replace the generic-industry type. Generic-industry microcircuit types may not have equivalent operational performance characteristics across military temperature ranges or reliability factors equivalent to MIL-M-38510 device types and may have slight variation in relation to case size. The presence of this information shall not be deemed as permitting substitution of generic-industry types for MIL-M-38510 types or as a waiver of any of the provisions of MIL-M-38510.

Military device type	Generic-industry type
01	561

6.6 Changes from previous issue. Asterisks are not used in this revision to identify changes with respect to the previous issue, due to the extensiveness of the changes.

Custodians:
Army - ER
Navy - EC
Air Force - 17

Review activities:
Army - AR, MI
Navy - OS, SH
Air Force - 11, 19, 85, 99
DLA - ES

User activities:
Army - SM
Navy - AS, CG, MC

Civil Agency Coordinating Activity:
NASA - NA

Preparing activity:
Air Force - 17

Agent:
DLA - ES

(Project 5962-0921)