MILITARY SPECIFICATION

MICROCIRCUITS, LINEAR, VOLTAGE OUTPUT 12-BIT DIGITAL-TO-ANALOG CONVERTERS, HYBRID AND MONOLITHIC SILICON

This specification is approved for use by all Departments and Agencies of the Department of Defense.

1. SCOPE

1.1 Scope. This specification covers the detail requirements for range-programmable, voltage output, digital-to-analog converters. Two product assurance classes and a choice of case outlines and lead finishes are provided and are reflected in the complete part number.

1.2 Part number. The part number shall be in accordance with MIL-M-38510.

1.2.1 Device types. The device types shall be as follows:

Device type	Bit resolution	Logic coding	Technology	Output voltage ranges
01	12	Complementary binary	Hybrid	0 to +5 V unipolar 0 to +10 V unipolar -2.5 to +2.5 V bipolar -5 to +5 V bipolar -10 to +10 V bipolar
02	12	Complementary binary	Monolithic	Same as defined for device type 01
03	12	Complementary binary	Hybrid	Same as defined for device type 01

1.2.2 Device class. The device class shall be the product assurance level as defined in MIL-M-38510.

1.2.3 Case outlines. The case outlines shall be designated as follows:

Device type	Outline letter	Case outline (see MIL-M-38510, appendix C)
01	X	(24-lead, .600" x 1.250"), dual-in-line package, see figure 1
02	Y	(24-lead, .800" x 1.330"), dual-in-line package, see figure 2
03	Z	(24-lead, .800" x 1.375"), dual-in-line package, see figure 3
01, 02, 03	J	D-3 (24 lead, 0.500" x 1.250"), dual-in-line package

Beneficial comments (recommendations, additions, deletions) and any pertinent data which may be of use in improving this document should be addressed to: Rome Air Development Center, (RBE-2), Griffiss AFB, NY 13441, by using the self-addressed Standardization Document Improvement Proposal (DD Form 1426) appearing at the end of this docufment or by letter.

DISTRIBUTION STATEMENT A. Approved for public release; distribution is unlimited.

1.3 Absolute maximum ratings.

Positive supply voltage (V_{CC}) to digital return - - - - -	+18 V
Negative supply voltage (V_{EE}) to digital return - - - - -	-18 V
Positive supply voltage (V_{DD}) to digital return device 01 and 03 only -	+7 V
Digital input voltage to digital return - - - - - - - - - -	0 V to V_{DD}
Output short circuit duration (to ground only)- - - - - -	25 milliseconds
Lead temperature (soldering, 60 seconds)- - - - - - - - -	300°C
Storage temperature -	-65°C to +150°C
Junction temperature- - - - - - - - - - - - - - - - - - - -	+175°C

1.4 Recommended operating conditions.

Positive supply voltage range (V_{CC}):	
Type 01 -	14.5 V to 15.5 V
Type 02 -	13.5 V to 16.5 V
Negative supply voltage range (V_{EE}):	
Type 01 -	-15.5 V to -14.5 V
Type 02 -	-16.5 V to -13.5 V
Positive supply voltage range (V_{DD}) device 01 and 03 only	4.5 V to 5.5 V
Ambient operating temperature range (T_A)- - - - - - - - - -	-55°C to +125°C

1.5 Power and thermal characteristics.

Package	Case outline	Maximum allowable power dissipation	Maximum θ_{JC}	Maximum θ_{JA}
24 lead dual-in-line	X,Y,Z	1.5 W at T_A = +125°C	55°C/W	40°C/W
24 lead dual-in-line	J	1.0 W at T_A = +125°C	40°C/W	50°C/W

2. APPLICABLE DOCUMENTS

2.1 Government documents.

2.1.1 Specification and standard. The following specification and standard, form a part of this specification to the extent specified herein. Unless otherwise specified, the issues of these documents shall be those listed in the issue of the Department of Defense Index of Specifications and Standards and supplement thereto, cited in the solicitation.

SPECIFICATION

MILITARY

MIL-M-38510 - Microcircuits, General Specification for.

STANDARD

MILITARY

MIL-STD-883 - Test Methods and Procedures for Microelectronics.

(Copies of the specification and standard required by contractors in connection with specific acquisition functions should be obtained from the contracting activity or as directed by the contracting activity.)

2.2 Order of precedence. In the event of a conflict between the text of this specification and the references cited herein (except for associated detail specifications, specification sheets or MS standards), the text of this specification shall take precedence. Nothing in this specification, however, shall supersede applicable laws and regulations unless a specific exemption has been obtained.

3. REQUIREMENTS

3.1 Detail specification. The individual item requirements shall be in accordance with MIL-M-38510, and as specified herein.

3.2 Design, construction, and physical dimensions. The design, construction, and physical dimensions shall be as specified in MIL-M-38510 and herein.

3.2.1 Circuit diagram and terminal connections. The circuit diagram and terminal connections shall be as specified on figure 4.

3.2.2 Functional schematic circuit. The functional schematic circuit shall be as specified on figure 5.

3.2.3 Case outlines. The case outlines shall be as specified in 1.2.3.

3.2.4 Schematic circuits. The schematic circuits shall be submitted to the preparing activity prior to inclusion of manufacturer's device in this specification and shall be submitted to the qualifying activity and agent activity (DESC-ECS) as a prerequisite for qualification. All qualified manufacturers' schematics shall be maintained by the agent activity and will be available upon request.

3.3 Lead material and finish. The lead material and finish shall be in accordance with MIL-M-38510 and 6.3 herein.

3.4 Electrical performance characteristics. The electrical performance characteristics are as specified in table I, and apply over the full recommended ambient operating temperature range, unless otherwise specified. The following conditions shall also apply unless otherwise specified:

V_{CC} = 15.0 V
V_{EE} = -15.0 V
V_{DD} = 5.0 V (Not required for device type 02),
Logic "0" = 0.8 V
Logic "1" = 2.0 V, device 01 and 02
Logic "1" = 2.4 V, device 03
VFSR = 20 V, (see figure 6)
$-55^{\circ}C \leq T_A \leq +125^{\circ}C$
Bipolar operation (see figure 6)
Load resistance, RL = 2 kilohms

3.5 Electrical test requirements. The electrical test requirements for each device class shall be the subgroups specified in table II. The electrical tests for each subgroup are described in table III.

3.6 Marking. Marking shall be in accordance with MIL-M-38510 and 1.2 herein.

3.6.1 Serialization. All class S devices shall be serialized in accordance with MIL-M-38510.

3.6.2 Correctness of indexing and markings. All devices shall be subjected to the final electrical tests subgroups 1 and 4 specified in table II after part marking to verify that they are correctly indexed and identified by part number. Optionally, an approved electrical test may be devised especialy for this requirement.

3.7 Microcircuit group assignment. The devices covered by this specification shall be in microcircuit technology group I and 92 (see MIL-M-38510, appendix E).

4. QUALITY ASSURANCE PROVISIONS

4.1 Sampling and inspection. Sampling and inspection procedures shall be in accordance with MIL-M-38510 methods 5005 and 5007 or method 5008, as applicable, of MIL-STD-883, except as modified herein.

TABLE I. Electrical performance characteristics.

Test	Symbol	Conditions (see 3.4 and figure 9 unless otherwise specified)	Limits Min	Limits Max	Units
Resolution	-	All device types	12		Bits
Supply current from V_{CC}	I_{CC}	Input bits = 0111 1111 1111 V_{CC} = 15 V, Device types 01 and 03 T_A = +25°C -55°C ≤ T_A ≤ +125°C Device type 02 T_A = +25°C -55°C ≤ T_A ≤ +125°C	 1 1 1 1	 25 30 17 20	 mA mA mA mA
Supply current from V_{EE}	I_{EE}	Input bits = 0111 1111 1111 V_{EE} = -15 V, Device types 01 and 03 T_A = +25°C -55°C ≤ T_A ≤ +125°C Device type 02 T_A = +25°C -55°C ≤ T_A ≤ +125°C	 -38 -45 -25 -30	 -1 -1 -1 -1	 mA mA mA mA
Supply current from V_{DD}	I_{DD}	Input bits = 0111 1111 1111 V_{DD} = 5 V, Device types 01 and 03 T_A = +25°C -55°C ≤ T_A ≤ +125°C	 - -	 22.5 25	 mA mA
Input low current	I_{IL}	V_{IN} (logic) = 0 V V_{DD} = 5.5 V, Device types 01 and 03 T_A = +25°C -55°C ≤ T_A ≤ +125°C V_{CC} = 15.0 V, Device type 02 T_A = +25°C -55°C ≤ T_A ≤ +125°C (Each input measured separately)	 -1.4 -1.6 0 0	 - - .17 .2	 mA mA mA mA
Input high current	I_{IH}	V_{IN} (logic) = 2.4 V V_{DD} = 5.5 V, Device types 01 and 03 T_A = +25°C -55°C ≤ T_A ≤ +125°C V_{CC} = 15.0 V, Device type 02 T_A = +25°C -55°C ≤ T_A ≤ +125°C V_{IN} (logic) = 5.5 V, V_{DD} = 5.5 V, Device types 01 and 03 T_A = +25°C -55°C ≤ T_A ≤ +125°C V_{CC} = 15.0 V, Device type 02 T_A = +25°C -55°C ≤ T_A ≤ +125°C (Each input measured separately)	 -35 -40 -1 -1 -36 -40 -1 -1	 36 40 270 300 36 40 450 500	 µA µA µA µA µA µA µA µA
Output short circuit current	I_{OS}	Input bits = 0000 0000 0000 Device types 01, 02, and 03	-40	1.0	mA

TABLE I. Electrical performance characteristics - Continued.

Test	Symbol	Conditions (see 3.4 and figure 9 unless otherwise specified)	Limits Min	Limits Max	Units
Reference voltage	V_{REF}	I_O = -200 µA, Device types 01 and 03	5.89	6.60	V
		I_O = -2.5 mA Device type 02 T_A = +25°C	6.23	6.37	V
Reference voltage drift	dV_{REF}/dT	Device types 01, 02, and 03 See table III 1/	-20	20	ppm/°C
Unipolar offset voltage error	V_{OS}	Input bits = 1111 1111 1111 Unipolar, V_{FSR} = 10 V, 2/ Device types 01, 02, and 03 (Initial)	-2	2	LSB
		(end point)	-3	3	LSB
		T_A = +25°C See table IV 6/			
Unipolar offset voltage drift	dV_{OS}/dT	All device types See table III 1/	-.012	.012	LSB/°C
Gain error 4/	A_E	Input bits = 0000 0000 0000 and input bits = 1111 1111 1111 Unipolar, V_{FSR} = 10 V, Device types 01 and 03 (Initial)	-.10	.10	%
		(end point)	-.25	.25	%
		Device type 02 (Initial)	-.20	.20	%
		(end point)	-.25	.25	%
		T_A = +25°C See table IV 6/			
Gain error drift	dA_E/dT	Device types 01, 02, and 03 See table III 1/	-20	20	ppm/°C
Bipolar gain error	B_{PAE}	Input bits = 0000 0000 0000 and input bits = 1111 1111 1111 Device types 01 and 03	-.1	.1	%
		Device type 02	-.2	.2	%
		T_A = +25°C			
Bipolar offset error	B_{POE}	Input bits = 1111 1111 1111 Device types 01 and 03 (Initial)	-4	4	LSB
		Device type 02 (Initial)	-8	8	LSB
		T_A = +25°C See table IV 6/			
Bipolar offset error drift	dB_{POE}/dT	Device types 01, 02, and 03 See table III 1/	-.08	.08	LSB/°C

See footnotes at end of table.

TABLE I. Electrical performance characteristics - Continued.

Test	Symbol	Conditions (see 3.4 and figure 9 unless otherwise specified)	Limits Min	Limits Max	Units
Bipolar zero error	B_{ZE}	Input bits = 0111 1111 1111			
		Device types 01 and 03 (Initial)	-2	2	LSB
		(end point)	-6	6	LSB
		Device type 02 (Initial)	-4	4	LSB
		(end point)	-6	6	LSB
		T_A = +25°C 6/			
Bipolar zero error drift	d_{BZE}/dT	Device types 01, 02, and 03 See table III 1/	-.04	.04	LSB/°C
Power supply sensitivity from V_{CC} at full scale	$+P_{SS1}$	Input bits = 0000 0000 0000			
		+14.5 V ≤ V_{CC} ≤ +15.0 V, Device types 01 and 03	-.16	.16	LSB/%PS
		+15.0 V ≤ V_{CC} ≤ +15.5 V, Device types 01 and 03	-.16	.16	LSB/%PS
		+13.5 V ≤ V_{CC} ≤ +15.0 V, Device type 02	-.12	.12	LSB/%PS
		+15.0 V ≤ V_{CC} ≤ +16.5 V, Device type 02	-.12	.12	LSB/%PS
Power supply sensitivity at full scale	$+P_{SS2}$	Input bits = 0000 0000 0000			
		+4.5 V ≤ V_{DD} ≤ +5.0 V, Device types 01 and 03	-.16	.16	LSB/%PS
		+5.0 V ≤ V_{DD} ≤ +5.5 V, Device types 01 and 03	-.16	.16	LSB/%PS
Power supply sensitivity from V_{EE} at full scale	$-P_{SS}$	Input bits = 0000 0000 0000			
		-15.5 V ≤ V_{EE} ≤ -15.0 V, Device types 01 and 03	-.16	.16	LSB/%PS
		-15.0 V ≤ V_{EE} ≤ -14.5 V, Device types 01 and 03	-.16	.16	LSB/%PS
		-16.5 V ≤ V_{EE} ≤ -15.0 V, Device type 02	-.12	.12	LSB/%PS
		-15.0 V ≤ V_{EE} ≤ -13.5 V, Device type 02	-.12	.12	LSB/%PS
Integral linearity error	L_E	(Abbreviated codes test) 5/			
		Device type 01 (Initial)	-.5	.5	LSB
		(end point)	-1.5	1.5	LSB
		Device type 02 (Initial)	-.5	.5	LSB
		(end point)	-.5	.5	LSB
		Device type 03 (Initial)	-.25	.25	LSB
		(end point)	-.5	.5	LSB
		See tables III and IV 6/			
Differential linearity error	D_{LE}	(Abbreviated codes test) All device types See table III	-1.0	1.0	LSB

See footnotes at end of table.

TABLE I. Electrical performance characteristics - Continued.

Test	Symbol	Conditions (see 3.4 and figure 9 unless otherwise specified)	Limits Min	Limits Max	Units
Integral linearity error	L_E	(All codes test)			
		Device types 01 and 02	-.5	.5	LSB
		See table III			
		Device type 03	-.25	.25	LSB
Settling time	t_{SLH}	Input bits = 1111 1111 1111 to input bits = 0000 0000 0000			
		20 V to ±1/2 LSB,			
		Device types 01 and 03	-	7	µs
		Device type 02	-	5	µs
		20 V to ±1 LSB,			
		Device types 01 and 03	-	6	µs
		Device type 02	-	4	µs
		Input bits = 1111 1111 1111 to input bits = 1111 1111 1110			
		1 LSB to ±1/2 LSB,			
		Device types 01 and 03	-	3	µs
		Device type 02	-	2	µs
		T_A = +25°C (figure 9)			
Settling time	t_{SHL}	Input bits = 0000 0000 0000 to input bits = 1111 1111 1111			
		20 V to ±1/2 LSB,			
		Device types 01 and 03	-	7	µs
		Device type 02	-	5	µs
		20 V to ±1 LSB,			
		Device types 01 and 03	-	6	µs
		Device type 02	-	4	µs
		Input bits = 1111 1111 1110 to input bits = 1111 1111 1111			
		1 LSB to ±1/2 LSB,			
		Device types 01 and 03	-	3	µs
		Device type 02	-	2	µs
		T_A = +25°C (figure 9)			
Output noise voltage	NO	All inputs = 1111 1111 1111			
		10 Hz ≤ BW ≤ 100 KHz			
		All device types	-	100	µV rms
		T_A = +25°C (figure 10)			

1/ Calculations for dV_{OS}/dT, d_{AE}/dT, d_{BPOE}/dT and d_{BZE}/dT are determined from measurements made at +125°C, +25°C, and -55°C for V_{OS}, A_E, B_{POE} and B_{ZE}, respectively.

2/ Unless otherwise stated, all tests are performed in the bipolar mode over a -10 V to +10 V range. The scale factor is V_{FSR}/4096 LSB. (i.e., for V_{FSR} = 20 V, the scale factor is 20 V/4096 LSB = 4.88 mV/LSB.)

3/ See figure 5 for output voltage range and operating mode programming.

4/ The gain error of a 12 bit D/A converter in % of full scale range corresponds to gain error in LSB units by the following relationship- 0.20%x4096 LSB/100%=8.92 LSB.

5/ The abbreviated integral linearity error test shown for subgroups 4, 5, and 6 shall represent the minimum number of tests required. The manufacturer shall add additional tests and/or calculations to assure that the worst positive and negative error values, as determined by the abbreviated test, are within 150 milliLSB of the worst positive and negative error values, as determined by the all codes test for subgroups 7 and 8.

6/ The end point limits of table IV shall be used for design.

7/ See 6.4 for symbols and definitions.

TABLE II. Electrical test requirements.

MIL-STD-883 test requirements	Subgroups (see 1/ table III)	
	Class S devices	Class B devices
Interim electrical parameters method 5004	1	1
Final electrical test parameters method 5004	1,4,5,6, 7	1,4,5,6
Group A test requirements method 5005	1,2,3,4, 5,6,7,8,12	1,2,3,4, 5,6,7,8
Group C end-point and group B, class S, electrical parameters method 5005	1,4,5,6 and table IV delta limits	1,4, and table IV delta limits
Additional electrical subgroups for group C periodic inspections	N/A	12
Group D end-point electrical parameters method 5005	1,4,5,6 and table IV end point limits	1,4, and table IV end point limits

1/ PDA applies to subgroup 1 (see 4.2c).

4.2 Screening. Screening shall be in accordance with method 5004 of MIL-STD-883, and shall be conducted on all devices prior to qualification and quality conformance inspection. The following additional criteria shall apply:

a. Burn-in tests (method 1015 of MIL-STD-883).

(1) Class S devices: Dynamic tests (test condition D) using the circuit shown on figure 8. Test duration shall be as defined in MIL-STD-883.

(2) Class B devices: Test condition D, using the circuit shown on figure 8, or test condition C, using the circuit shown on figure 7.

b. Interim and final electrical test parameters shall be as specified in table II, except interim electrical parameters tests prior to burn-in is optional at the discretion of the manufacturer.

c. The percent defective allowable (PDA) for class S and class B devices shall be as specified in MIL-M-38510, based on failures from group A, subgroup 1 test after cooldown as final electrical tests in accordance with method 5004 of MIL-STD-883 and with no intervening electrical measurements. If interim electrical parameter tests are performed prior to burn-in, failures resulting from pre burn-in screening may be excluded from the PDA. If interim electrical parameter tests prior to burn-in are omitted, then all screening failures shall be included in the PDA. The verified failures of group A, subgroup 1 after burn-in divided by the total number of devices submitted for burn-in in that lot shall be used to determine the percent defective for that lot, and the lot shall be accepted or rejected based on the PDA for the applicable device class.

Device type 01

SYMBOL	INCHES MIN	INCHES MAX	MILLIMETERS MIN	MILLIMETERS MAX	NOTES
A		.250		6.35	
A_1	.100 BSC		2.54 BSC		
b	.015	.020	0.38	.508	8
b_1		.055		1.39	2,8
c	.008	.020	0.20	.51	8
D	1.233	1.270	31.32	32.27	4
D_1		1.270		32.27	
E	.585	.605	14.85	15.36	4
E_1	.590	.610	14.99	15.49	7
E_2		.605		15.37	
e	.100 BSC		2.54 BSC		5,9
L	.125	.200	3.18	5.08	
L_1	.175	.230	4.45	5.84	
Q	.010	.060	1.02	1.52	3
S		.130		3.30	6
S_1	.033	.088	0.84	2.23	6
S_2	.005		.13		

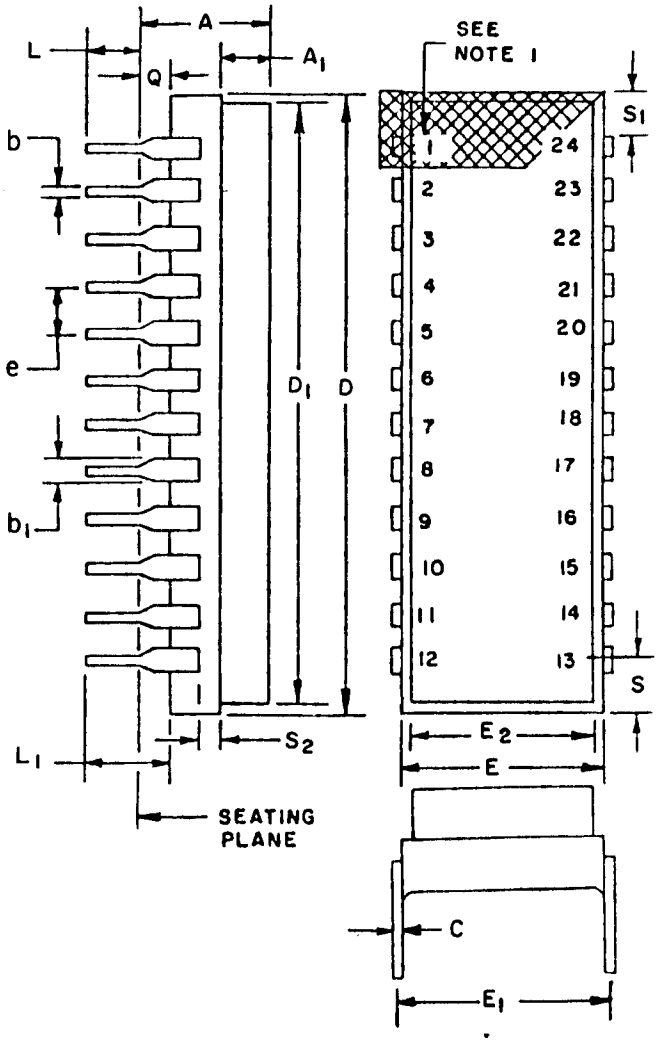

NOTES:
1. Index area; a notch or a pin one identification mark shall be located adjacent to pin one and shall be within the shaded area shown. The manufacturer's identification shall not be used as a pin one identification mark.
2. The minimum limit for dimension b_1 may be .023 (0.58 mm) for leads number 1, 12, 13, and 24 only.
3. Dimension Q shall be measured from the seating plane to the base plane.
4. This dimension allows for off-center lid, meniscus and glass overrun.
5. The basic pin spacing is .100 (2.54 mm) between centerlines. Each pin centerline shall be located within ±.005 (0.13 mm) of its exact longitudinal position relative to pins 1 and 24.
6. Applies to all four corners (leads number 1, 12, 13 and 24).
7. E_1 shall be measured at the centerline of the leads.
8. All leads - increase maximum limit by .003 (0.08 mm) measured at the center of the flat, when lead finish A or B is applied.
9. Twenty-two spaces.
10. Dimensions are in inches.
11. Metric equivalents are given for general information only.

FIGURE 1. Case outline X.

Device type 02

SYMBOL	INCHES		MILLIMETERS		NOTES
	MIN	MAX	MIN	MAX	
A		.236		5.99	
A_1	.120	.170	3.05	4.32	
b	.016	.022	0.40	0.55	8
b_1	.035	.045	0.89	1.14	2,8
C	.009	.015	.23	0.38	8
D	1.275	1.385	32.39	35.18	4
E	.770	.830	19.56	21.08	4
E_1	.590	.610	14.99	15.49	7
e	.100 BSC		2.54 BSC		9
L	.170	.215	4.32	5.46	
L_1	.205	.250	5.21	6.35	
Q	.015	.035	0.38	0.89	3
S	.087	.125	2.21	3.18	6
S_1		.114		2.90	6
S_2	.010				

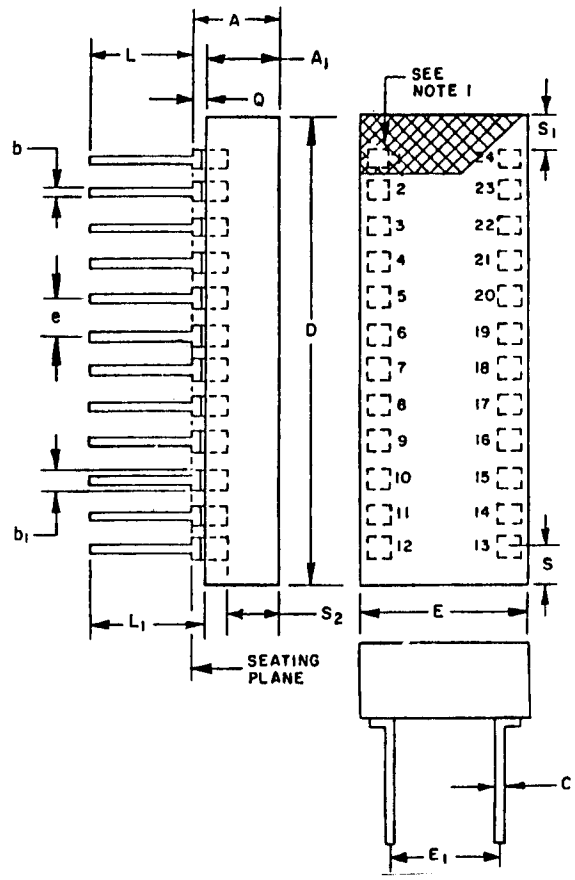

NOTES:
1. Index area; a notch or a pin one identification mark shall be located adjacent to pin one and shall be within the shaded area shown. The manufacturer's identification shall not be used as a pin one identification mark.
2. The minimum limit for dimension b_1 may be .023 (0.58 mm) for leads number 1, 12, 13, and 24 only.
3. Dimension Q shall be measured from the seating plane to the base plane.
4. This dimension allows for off-center lid, meniscus and glass overrun.
5. The basic pin spacing is .100 (2.54 mm) between centerlines. Each pin centerline shall be located within ±.010 (0.25 mm) of its exact longitudinal position relative to pins 1 and 24.
6. Applies to all four corners (leads number 1, 12, 13, and 24).
7. L_1 shall be measured at the centerline of the leads.
8. All leads - increase maximum limit by .003 (0.08 mm) measured at the center of the flat, when finish A or B is applied.
9. Twenty-two spaces.
10. If this configuration is used, no organic or polymeric materials shall be molded to the bottom of the package to cover the leads.
11. Dimensions are in inches.
12. Metric equivalents are given for general information only.

FIGURE 2. Case outline Y.

Device type 03

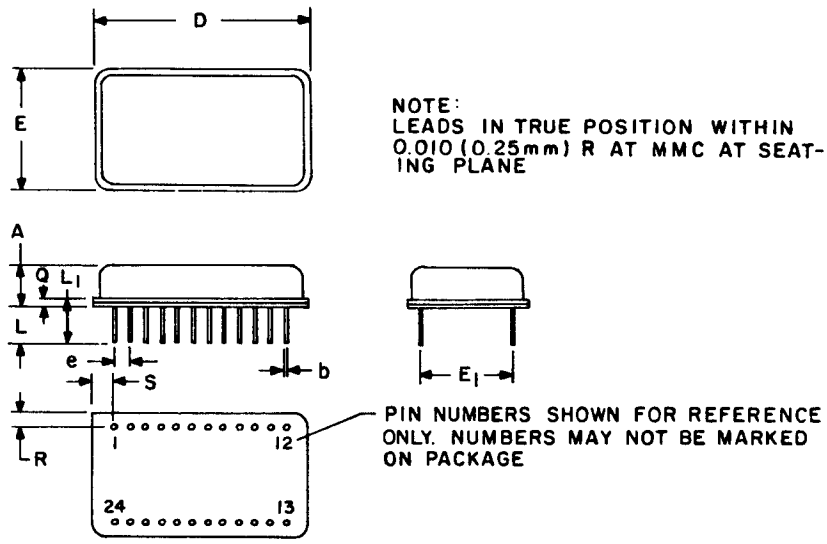

SYMBOL	INCHES		MILLIMETERS		NOTES
	MIN	MAX	MIN	MAX	
A	.170	.250	4.318	6.35	
b	.016	.021	.406	.533	7
D	1.365	1.385	34.67	35.18	3
E	.790	.810	20.07	20.57	3
E_1	.590	.610	14.99	15.49	6
e	.100	BSC	2.54	BSC	4,8
L		.285	3.81	7.62	
L_1	.150	.300			
Q		.015		.381	2
R	.080	.110	2.032	2.794	5
S	.125	.150	3.175	3.81	5

NOTES:
1. The manufacturer's identification shall not be used as a pin one identification mark.
2. Dimension Q shall be measured from the seating plane to the base plane.
3. This dimension allows for off-center lid overrun.
4. The basic pin spacing is .100 (2.54 mm) between center lines. Each pin center line shall be located within .010 (0.25 mm) of its exact to pins 1 and 24.
5. Applies to all four corners (leads 1, 12, 13, 24).
6. E_1 shall be measured at the center line of the leads.
7. All leads - increase maximum limit by .003 (0.08 mm) measured at the center of the flat, when lead finish A or B is applied.
8. Twenty-two spaces.
9. Dimensions are in inches.
10. Metric equivalents are given for general information only.

FIGURE 3. Case outline Z.

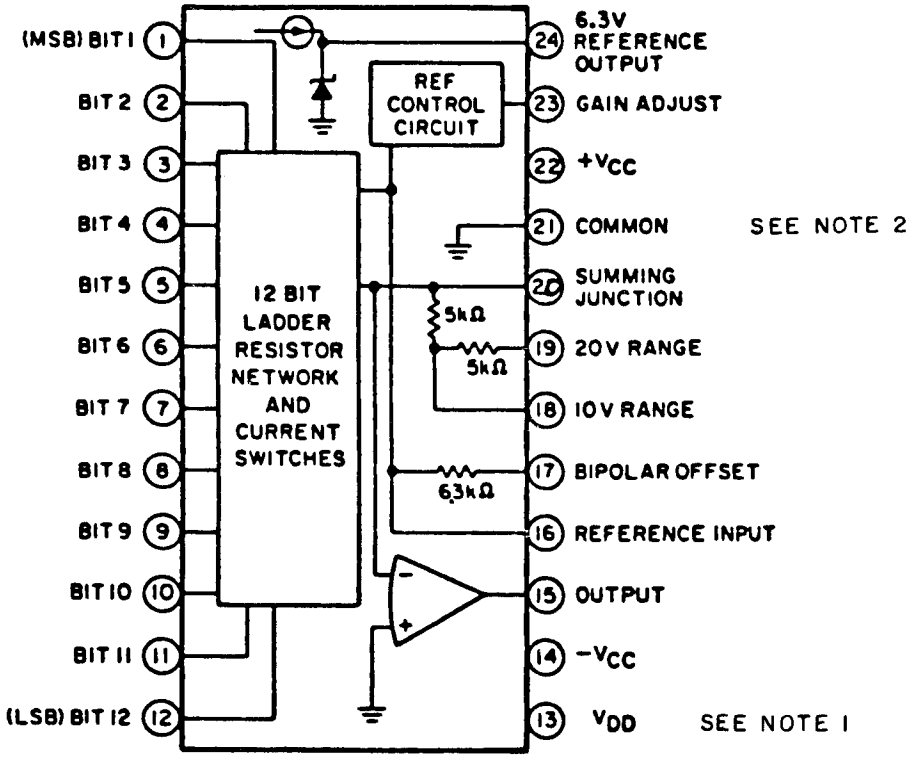

NOTES:
1. Pin 13; for device type 01 is V_{DD}, for device type 02 is no connection, for device type 03 is latch control, +5V.
2. For all device types pin 21 is connected to case. Case outline Z is a metal can.

FIGURE 4. Circuit diagram and terminal connections.

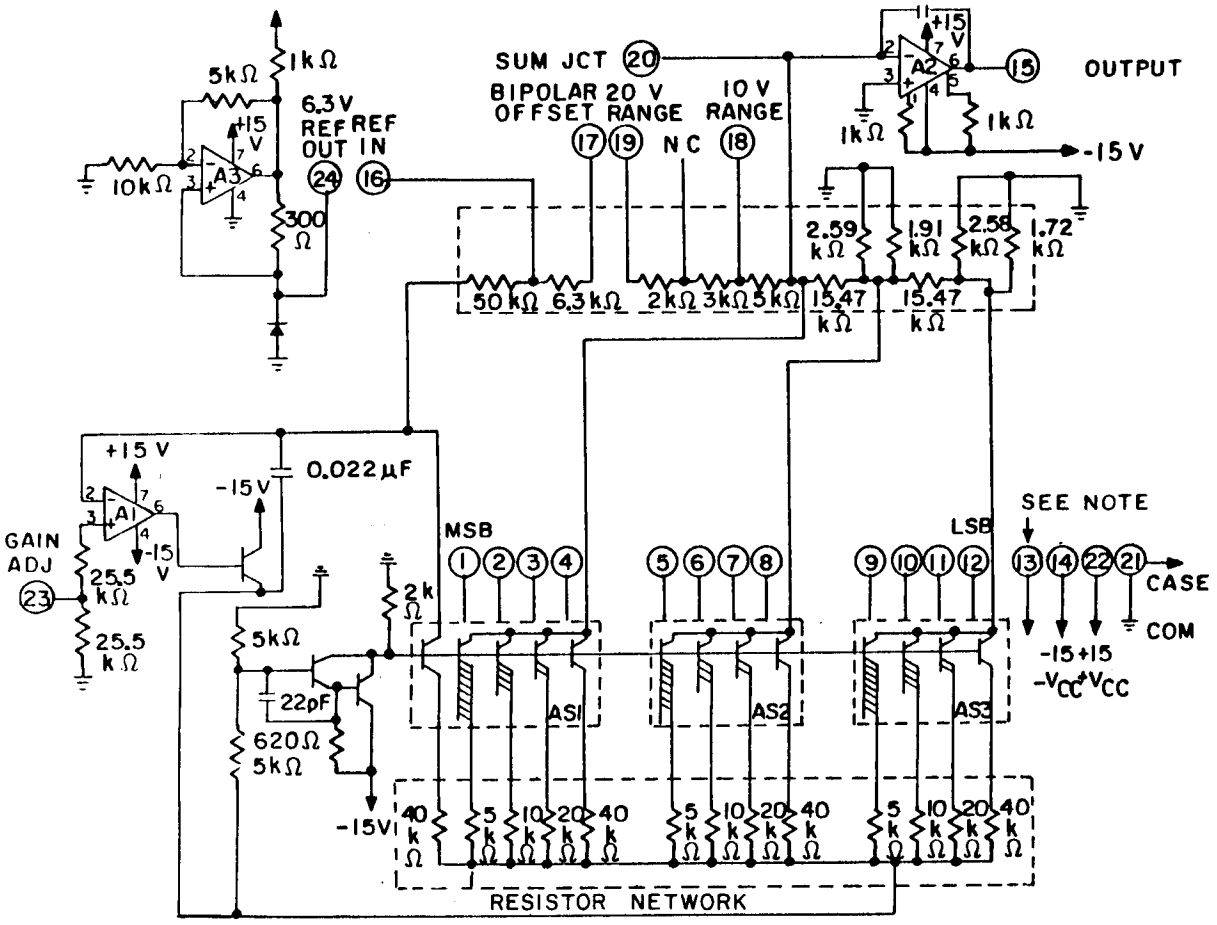

FUNCTIONAL SCHEMATIC CIRCUIT - SIMPLIFIED

NOTE: See note 1 to figure 4.

OUTPUT RANGE SELECTION

Output range	Required external pin connections			
-2.5 V to +2.5 V	15 to 18	17 to 20	19 to 20	16 to 24
-5 V to +5 V	15 to 18	17 to 20	19 NC	16 to 24
-10 V to +10 V	15 to 19	17 to 20	19 to 15	16 to 24
0 to 5 V	15 to 18	17 to 21	19 to 20	16 to 24
0 to +10 V	15 to 18	17 to 21	19 NC	16 to 24

FIGURE 5. Functional schematic with output range selection.

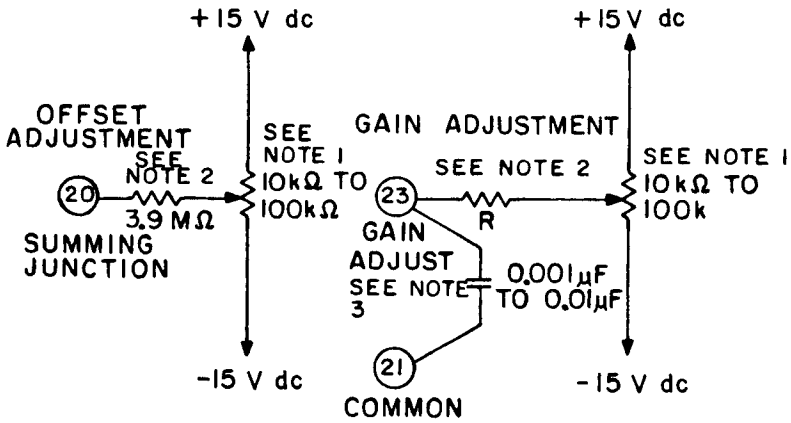

Unipolar output - complementary binary

Binary input code	Unipolar output ranges	
MSB LSB	0 to +10V	0 to +5V
0000 0000 0000	+9.9976V	+4.9988V
0011 1111 1111	+7.5000	+3.7500V
0111 1111 1111	+5.0000	+2.5000
1011 1111 1111	+2.5000	+1.2500
1111 1111 1110	+0.0024	+0.0012
1111 1111 1111	0.0000	0.0000

Bipolar output - complementary offset binary

Input code	Bipolar output ranges		
MSB LSB	±10V	±5V	±2.5V
0000 0000 0000	+9.9951V	+4.9976V	+2.4988V
0011 1111 1111	+5.0000	+2.5000	+1.2500
0111 1111 1111	0.0000	0.0000	0.0000
1011 1111 1111	-5.0000	-2.5000	-1.2500
1111 1111 1110	-9.9951	-4.9976	-2.4988
1111 1111 1111	-10.0000	-5.0000	-2.5000

NOTES:
1. $\leq$ 100ppm/°C
2. ±20% carbon composition or better. Locate close to the device to prevent noise pickup. Device type 01 and 03, R = 18 MΩ, device type 02, R = 10 MΩ.
3. Ceramic.
4. Offset and gain adjustment procedures are as follows:
   a. With all input digital bits = logic 1, adjust the OFFSET ADJUSTMENT for the proper output voltage as shown for the programmed output voltage range and operating mode.

   b. With all input digital bits = logic "0", adjust the GAIN ADJUSTMENT for the proper output voltage as shown for the programmed output voltage range and operating mode.

FIGURE 6. Offset and gain adjustment circuits with I/O relationships.

Device types 01 and 03

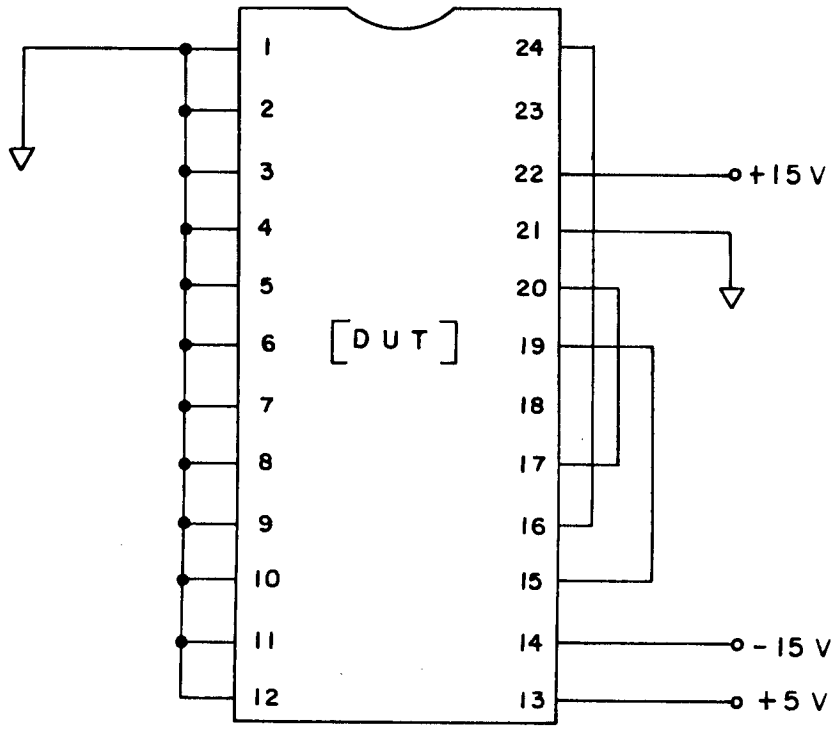

NOTE: Bypass each supply with a 1 μF tantalum capacitor and a 0.01 μF ceramic capacitor to common to prevent device oscillations.

FIGURE 7. Test circuit, burn-in and steady-state life test.

Device type 02

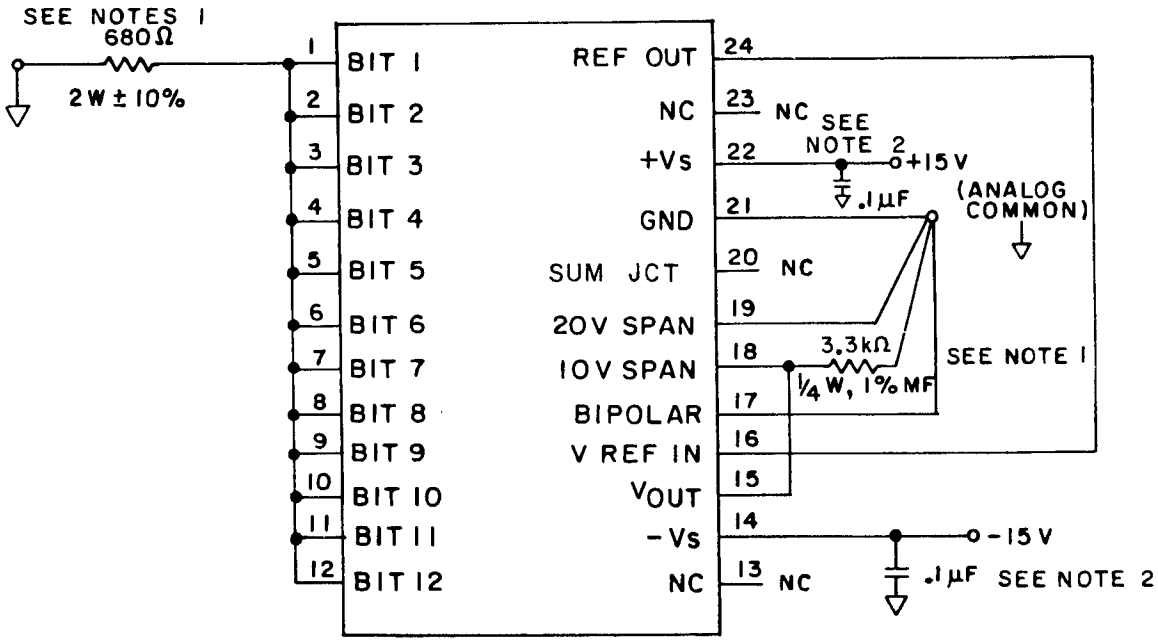

NOTES:
1. The actual measured values of the resistors selected shall not exceed the percent of tolerance of their branded value due to use, heat, or age. R1 shall be a thick film resistor with a value of 680Ω, 2 watts at 70°C, and ±10% tolerance. Equivalent to TRW part number GS-3-2W-680. R2 shall have a value of 3.3 kΩ, 1/4 watt, ±1%. Two resistors per part shown.
2. .1 μF capacitor for every device for ±15% V supplies to ground. Capacitors must be rated to 125°C. Working voltage must be 35 V or greater.

FIGURE 7. Test circuit, burn-in and steady-state life test - Continued.

Device types 01 and 03

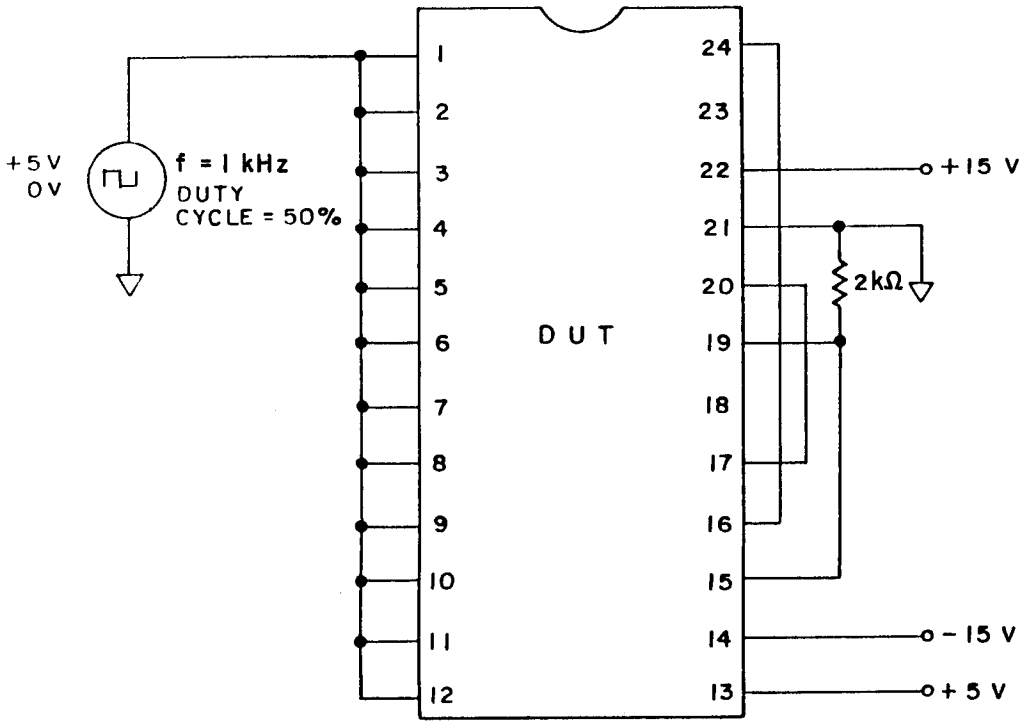

NOTE: The actual measured value of the resistor selected shall not exceed ±5 percent of its branded value due to use, heat, or age.

FIGURE 8. Test circuit, burn-in and steady-state life test.

Device type 02

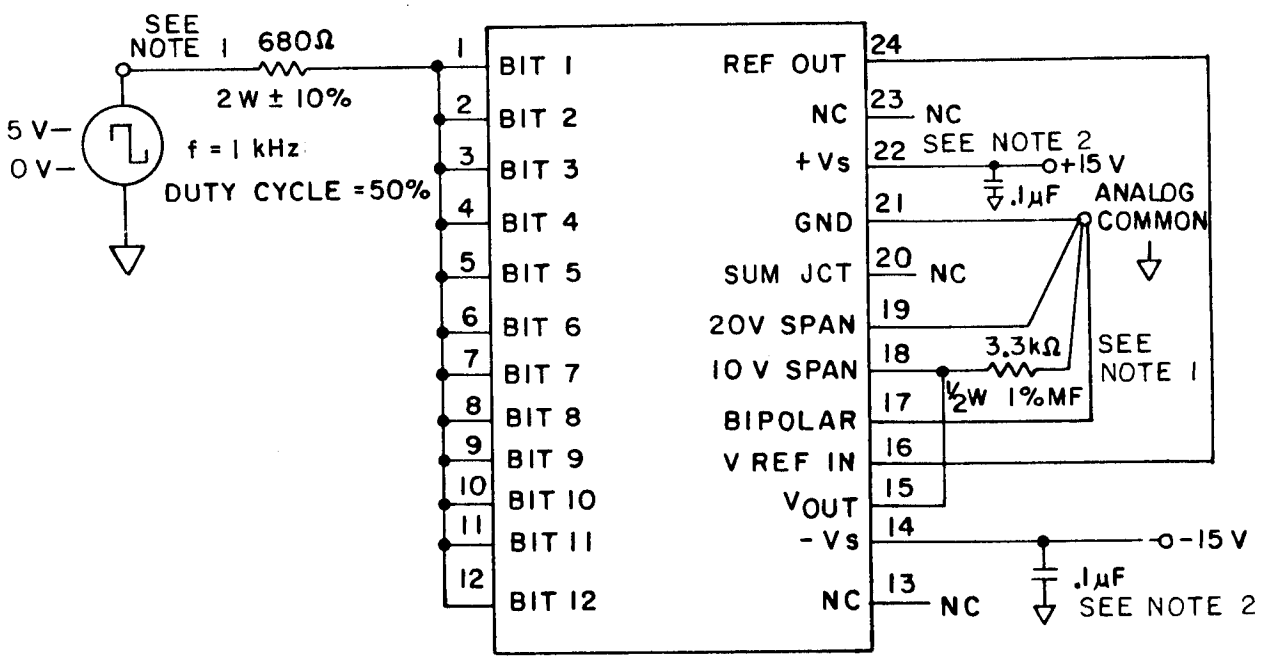

NOTES:
1. The actual measured values of the resistors selected shall not exceed the percent of tolerance of their branded value due to use, heat, or age. R1 shall be a thick film resistor with a value of 680 Ω, 2 watts at 70°C, and ±10% tolerance. Equivalent to TRW part number GS-3-2W-680. R2 shall have a value of 3.3 kΩ, 1/4 watt, ±1%. Two resistors per part shown.
2. .1 μF capacitor for every device for ±15 V supplies to ground. Capacitors must be rated to 125°C. Working voltage must be 35 V or greater.

FIGURE 8. Test circuit, burn-in and steady-state life test - Continued.

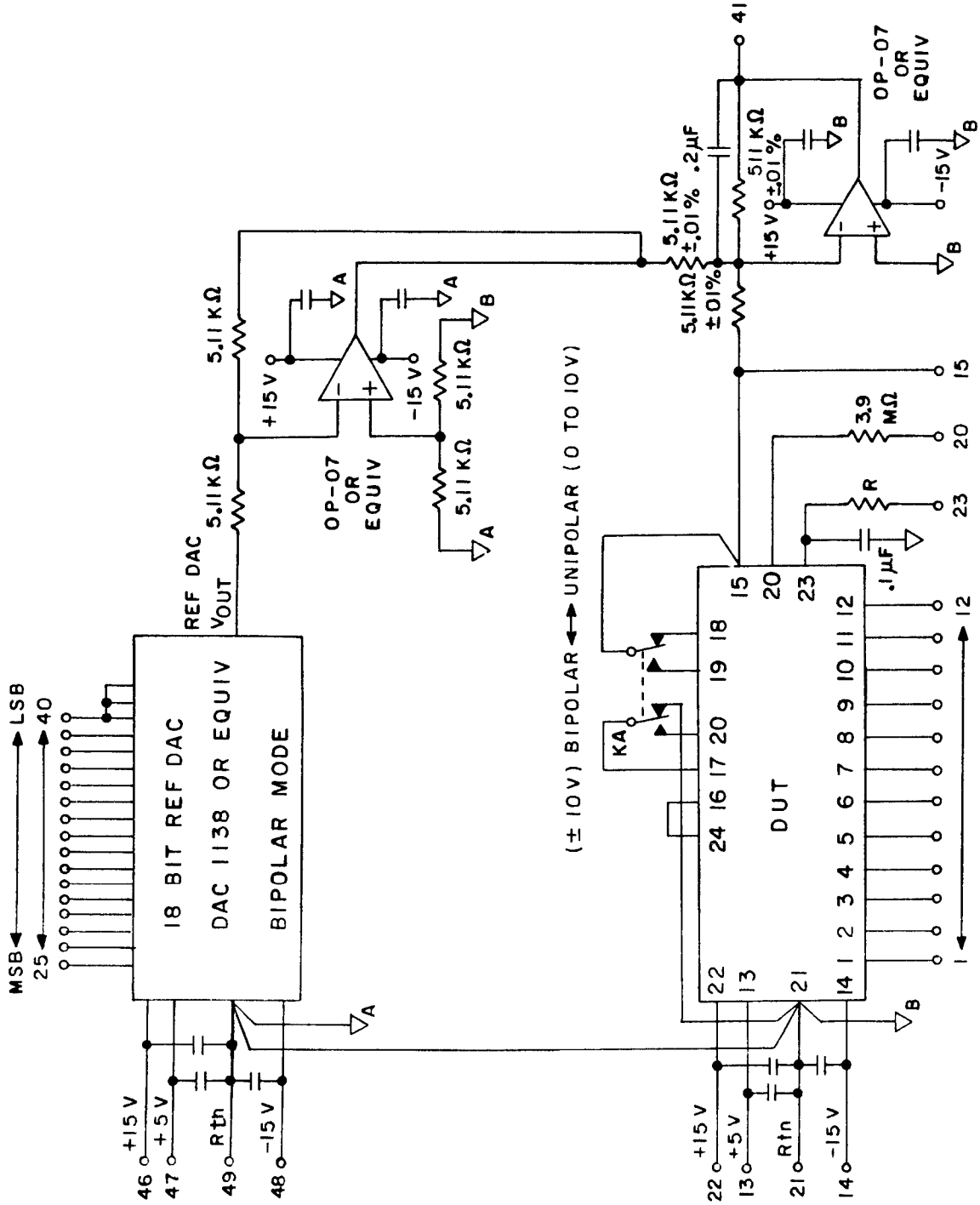

NOTE: All bypass capacitors are .1 µF ceramic.

FIGURE 9. Test circuit for static tests for all device types.

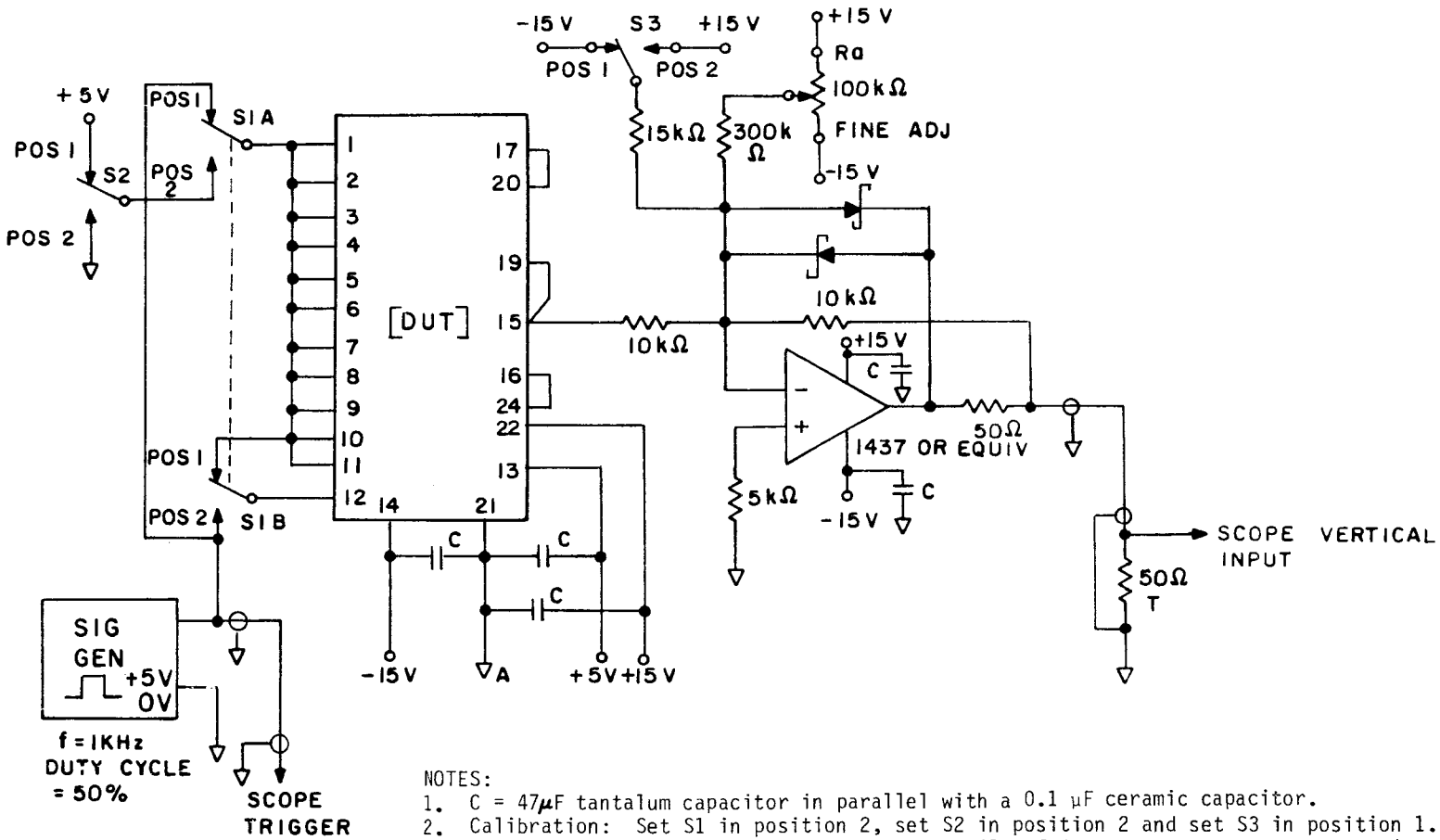

NOTES:

1. C = 47μF tantalum capacitor in parallel with a 0.1 μF ceramic capacitor.
2. Calibration: Set S1 in position 2, set S2 in position 2 and set S3 in position 1. Adjust potentiometer, Ra, until a 1 kHz square wave appears on the oscilloscope. (Vertical gain = 2mV/cm.) Adjust the scope vertical calibration control so that the square wave peak to peak voltage is 2 cm high. (1 LSB = 2 cm)[2]
3. Test: Adjust the scope horizontal timing and measure the high-to-low and low-to-high settling times ½ LSB from the final value. Set S1 in position 1 and measure the high-to-low settling times ½ LSB and 1 LSB from the final value (as seen on the oscilloscope).[2] Repeat the calibration with S2 in position and S3 in position 1. Set S1 in position 1 and measure the low-to-high settling times ½ LSB and 1 LSB from the final value (as seen on the oscilloscope).[2]

FIGURE 10. Test circuit for settling time for all device types.

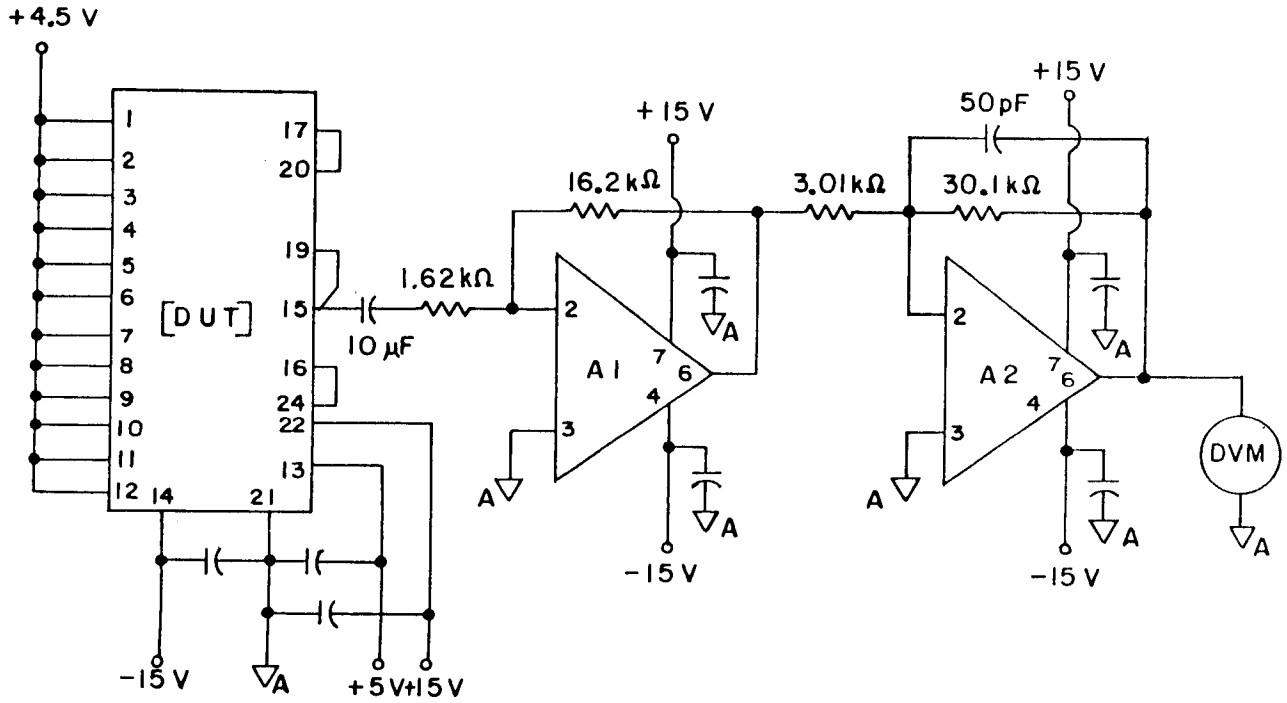

NOTES:
1. Unless otherwise stated, all capacitors are 47 µF tantalum paralleled with 0.1 µF ceramic.
2. The meter shall read RMS and shall have a band width greater than 100 kHz.
3. A1 and A2 shall have a gain-bandwidth product greater than 5 MHz and an input noise density less than 10 nV/ $\sqrt{\text{Hz}}$.
4. All "A" point ground connections shall return to a single unipoint ground at device pin 21.

FIGURE 11. Test circuit for output noise tests for all device types.

TABLE III. Group A inspection for all device types.

Subgroup	Symbol	Test no.	Applied voltage ref. pin no. 21 (figure 9) 22 V_{CC} (V)	14 V_{EE} (V)	13 V_{DD} (V) 1/	Applied DUT digital code-word 1<----------->12 MSB<----------->LSB	Applied ref DAC digital code-word 25<----------->40 MSB<----------->LSB	Active relays	Measurement sense lines ref. pin no. 21 Pin	Value	Unit	Equations and notes		Limits Min	Max	Units
1 T_A = +25°C	I_{CC}	1	+15.0	-15.0	+5.0	0111 1111 1111	1111 1111 1111 1111	KA	22	I1	mA	I_{CC} = I1	Device types 01 and 03	1	25	mA
													Device type 02	"	17	"
	I_{EE}	2	"	"	"	0111 1111 1111	1111 1111 1111 1111	"	14	I2	"	I_{EE} = I2	Device types 01 and 03	-38	-1	"
													Device type 02	-25	"	"
	I_{DD}	3	"	"	"	0111 1111 1111	1111 1111 1111 1111	"	13	I3	"	I_{DD} = I3	Device types 01 and 03	-	22.5	"
	I_{IL1}	4	"	"	+5.5	0000 0000 0000	0000 0000 0000 1111	"	1	I4	"	I_{IL1} = I4	Device types 01 and 03	-1.4	-	"
													Device type 02	0	.17	"
	I_{IL2}	5	"	"	"	"	"	"	2	I5	"	I_{IL2} = I5		"	"	"
	I_{IL3}	6	"	"	"	"	"	"	3	I6	"	I_{IL3} = I6		"	"	"
	I_{IL4}	7	"	"	"	"	"	"	4	I7	"	I_{IL4} = I7		"	"	"
	I_{IL5}	8	"	"	"	"	"	"	5	I8	"	I_{IL5} = I8		"	"	"
	I_{IL6}	9	"	"	"	"	"	"	6	I9	"	I_{IL6} = I9		"	"	"
	I_{IL7}	10	"	"	"	"	"	"	7	I10	"	I_{IL7} = I10		"	"	"
	I_{IL8}	11	"	"	"	"	"	"	8	I11	"	I_{IL8} = I11		"	"	"
	I_{IL9}	12	"	"	"	"	"	"	9	I12	"	I_{IL9} = I12		"	"	"
	I_{IL10}	13	"	"	"	"	"	"	10	I13	"	I_{IL10} = I13		"	"	"
	I_{IL11}	14	"	"	"	"	"	"	11	I14	"	I_{IL11} = I14		"	"	"
	I_{IL12}	15	"	"	"	"	"	"	12	I15	"	I_{IL12} = I15		"	"	"
	I_{IH1}	16	"	"	"	1111 1111 1111	1111 1111 1111 1111	"	1	I16	µA	I_{IH1} = I16	V_{IN} (logic) = 2.4 V Device types 01 and 03	-36	36	µA
													Device type 02	-1	270	"
	I_{IH2}	17	(All applied voltages, active relays and digital code words are identical for tests nos. 16 through 39.)						2	I17		I_{IH2} = I17		"	"	"
	I_{IH3}	18							3	I18		I_{IH3} = I18		"	"	"
	I_{IH4}	19							4	I19		I_{IH4} = I19		"	"	"
	I_{IH5}	20							5	I20		I_{IH5} = I20		"	"	"
	I_{IH6}	21							6	I21		I_{IH6} = I21		"	"	"
	I_{IH7}	22							7	I22		I_{IH7} = I22		"	"	"
	I_{IH8}	23							8	I23		I_{IH8} = I23		"	"	"
	I_{IH9}	24							9	I24		I_{IH9} = I24		"	"	"
	I_{IH10}	25							10	I25		I_{IH10} = I25		"	"	"
	I_{IH11}	26							11	I26		I_{IH11} = I26		"	"	"
	I_{IH12}	27							12	I27		I_{IH12} = I27		"	"	"
	I_{IH13}	28							1	I28		I_{IH13} = I28	V_{IN} (logic) = 5.5 V Device type 01 and 03	-36	36	"
													Device type 02	-1	450	"
	I_{IH14}	29							2	I29		I_{IH14} = I29		"	"	"
	I_{IH15}	30							3	I30		I_{IH15} = I30		"	"	"
	I_{IH16}	31							4	I31		I_{IH16} = I31		"	"	"
	I_{IH17}	32							5	I32		I_{IH17} = I32		"	"	"
	I_{IH18}	33							6	I33		I_{IH18} = I33		"	"	"
	I_{IH19}	34							7	I34		I_{IH19} = I34		"	"	"
	I_{IH20}	35							8	I35		I_{IH20} = I35		"	"	"
	I_{IH21}	36							9	I36		I_{IH21} = I36		"	"	"
	I_{IH22}	37							10	I37		I_{IH22} = I37		"	"	"
	I_{IH23}	38							11	I38		I_{IH23} = I38		"	"	"
	I_{IH24}	39							12	I39		I_{IH24} = I39		"	"	"
	I_{OS}	40	"	"	"	0000 0000 0000	0000 0000 0000 0000	"	15	I40	mA	I_{OS} = I40	All device types	-40	1.0	mA

See footnote at end of table.

TABLE III. Group A inspection for all device types - Continued.

Subgroup	Symbol	Test no.	Applied voltage ref. pin no. 21 (figure 9) 22 V_{CC} (V) 2/	14 V_{EE} (V) 3/	13 V_{DD} (V) 1/	Applied DUT digital code-word 1<----------->12 MSB<----------->LSB	Applied ref DAC digital code-word 25<----------->40 MSB<----------->LSB	Active relays	Measurement sense lines ref. pin no. 21 Pin	Value	Unit	Equations and notes	Limits Min	Max	Units
1 T_A = +25°C	$+P_{SS1}$	41	+15.0	-15.0	+5.0	0000 0000 0000	0000 0000 0000 1111	KA	41	E1	V				
		42	+14.5	"	"	"	"	"	"	E2	"	$+P_{SS1a}$ = .614 (E1-E2)			
		43	+15.5	"	"	"	"	"	"	E3	"	$+P_{SS1b}$ = .614 (E3-E1) Device types 01 and 03	-.16	.16	LSB/%PS
		44	+13.5	"	"	"	"	"	"	E4	"	$+P_{SS1a}$ = .205 (E1-E4)			
		45	+16.5	"	"	"	"	"	"	E5	"	$+P_{SS1b}$ = .205 (E5-E1) Device type 02	-.12	.12	"
	$-P_{SS1}$	46	+15.0	"	"	0000 0000 0000	0000 0000 0000 1111	"	"	E6	"				
		47	"	-15.5	"	"	"	"	"	E7	"	$-P_{SS1a}$ = .614 (E6-E7)			
		48	"	-14.5	"	"	"	"	"	E8	"	$-P_{SS1b}$ = .614 (E8-E6) Device types 01 and 03	-.16	.16	"
		49	"	-13.5	"	"	"	"	"	E9	"	$-P_{SS1a}$ = .205 (E6-E9)			
		50	"	-16.5	"	"	"	"	"	E10	"	$-P_{SS1b}$ = .205 (E10-E6) Device type 02	-.12	.12	"
	$+P_{SS2}$	51	"	-15.0	"	0000 0000 0000	0000 0000 0000 1111	"	"	E11	"				
		52	"	"	+4.5	"	"	"	"	E12	"	$+P_{SS2a}$ = .205 (E11-E12)			
		53	"	"	+5.5	"	"	"	"	E13	"	$+P_{SS2b}$ = .205 (E13-E11) Device types 01 and 03	-.16	.16	"
2 T_A =+125°C	I_{CC}	54	"	"	+5.0	0111 1111 1111	1111 1111 1111 1111	"	22	I41	mA	I_{CC} = I41			
												Device types 01 and 03	1	30	mA
												Device type 02	1	20	"
	I_{EE}	55	"	"	"	0111 1111 1111	1111 1111 1111 1111	"	14	I42	"	I_{EE} = I42			
												Device types 01 and 03	-45	-1	"
												Device type 02	-30	-1	"
	I_{DD}	56	"	"	"	0111 1111 1111	1111 1111 1111 1111	"	13	I43	"	I_{DD} = I43			
												Device types 01 and 03	-	25	"
	I_{IL1}	57	"	"	+5.5	0000 0000 0000	0000 0000 0000 1111	"	1	I44	"	I_{IL1} = I44			
												Device types 01 and 03	-1.6	-	"
												Device type 02	0	.2	"
	I_{IL2}	58	"	"	"	"	"	"	2	I45	"	I_{IL2} = I45	"	"	"
	I_{IL3}	59	"	"	"	"	"	"	3	I46	"	I_{IL3} = I46	"	"	"
	I_{IL4}	60	"	"	"	"	"	"	4	I47	"	I_{IL4} = I47	"	"	"
	I_{IL5}	61	"	"	"	"	"	"	5	I48	"	I_{IL5} = I48	"	"	"
	I_{IL6}	62	"	"	"	"	"	"	6	I49	"	I_{IL6} = I49	"	"	"
	I_{IL7}	63	"	"	"	"	"	"	7	I50	"	I_{IL7} = I50	"	"	"
	I_{IL8}	64	"	"	"	"	"	"	8	I51	"	I_{IL8} = I51	"	"	"
	I_{IL9}	65	"	"	"	"	"	"	9	I52	"	I_{IL9} = I52	"	"	"
	I_{IL10}	66	"	"	"	"	"	"	10	I53	"	I_{IL10} = I53	"	"	"
	I_{IL11}	67	"	"	"	"	"	"	11	I54	"	I_{IL11} = I54	"	"	"
	I_{IL12}	68	"	"	"	"	"	"	12	I55	"	I_{IL12} = I55	"	"	"
	I_{IH1}	69	"	"	"	1111 1111 1111	1111 1111 1111 1111	"	1	I56	µA	I_{IH1} = I56 V_{IN} (logic) = 2.4 V			
												Device types 01 and 03	-40	40	µA
												Device type 02	-1	300	"
	I_{IH2}	70	(All applied voltages, active relays and digital code words are						2	I57	"	I_{IH2} = I57	"	"	"
	I_{IH3}	71	identical for test nos. 69 through 80.)						3	I58	"	I_{IH3} = I58	"	"	"
	I_{IH4}	72							4	I59	"	I_{IH4} = I59	"	"	"
	I_{IH5}	73							5	I60	"	I_{IH5} = I60	"	"	"
	I_{IH6}	74							6	I61	"	I_{IH6} = I61	"	"	"
	I_{IH7}	75							7	I62	"	I_{IH7} = I62	"	"	"
	I_{IH8}	76							8	I63	"	I_{IH8} = I63	"	"	"
	I_{IH9}	77							9	I64	"	I_{IH9} = I64	"	"	"
	I_{IH10}	78							10	I65	"	I_{IH10} = I65	"	"	"
	I_{IH11}	79							11	I66	"	I_{IH11} = I66	"	"	"
	I_{IH12}	80							12	I67	"	I_{IH12} = I67	"	"	"

See footnotes at end of table.

TABLE III. Group A inspection for all device types - Continued.

Subgroup	Symbol	Test no.	Applied voltage ref. pin no. 21 (figure 9) 22 V_{CC} (V)	14 V_{EE} (V)	13 V_{DD} (V) 1/	Applied DUT digital code-word 1<----->12 MSB<----->LSB	Applied ref DAC digital code-word 25<----->40 MSB<----->LSB	Active relays	Measurement sense lines ref. pin no. 21 Pin	Value	Unit	Equations and notes	Limits Min	Max	Units
2 T_A =+125°C	I_{IH13}	81	+15.0	-15.0	+5.5	1111 1111 1111	1111 1111 1111 1111	KA	1	I68	µA	I_{IH13} = I68 V_{IN} (logic) = 5.5 V			
												Device types 01 and 03	-40	40	µA
												Device type 02	-1	500	"
	I_{IH14}	82	"	"	"	"	"	"	2	I69	"	I_{IH14} = I69	"	"	"
	I_{IH15}	83	"	"	"	"	"	"	3	I70	"	I_{IH15} = I70	"	"	"
	I_{IH16}	84	"	"	"	"	"	"	4	I71	"	I_{IH16} = I71	"	"	"
	I_{IH17}	85	"	"	"	"	"	"	5	I72	"	I_{IH17} = I72	"	"	"
	I_{IH18}	86	"	"	"	"	"	"	6	I73	"	I_{IH18} = I73	"	"	"
	I_{IH19}	87	"	"	"	"	"	"	7	I74	"	I_{IH19} = I74	"	"	"
	I_{IH20}	88	"	"	"	"	"	"	8	I75	"	I_{IH20} = I75	"	"	"
	I_{IH21}	89	"	"	"	"	"	"	9	I76	"	I_{IH21} = I76	"	"	"
	I_{IH22}	90	"	"	"	"	"	"	10	I77	"	I_{IH22} = I77	"	"	"
	I_{IH23}	91	"	"	"	"	"	"	11	I78	"	I_{IH23} = I78	"	"	"
	I_{IH24}	92	"	"	"	"	"	"	12	I79	"	I_{IH24} = I79	"	"	"
	I_{OS}	93	"	"	"	0000 0000 0000	0000 0000 0000 0000	"	15	I80	mA	I_{OS} = I80	-40	1.0	mA
	$+P_{SS1}$	94	"	"	+5.0	0000 0000 0000	0000 0000 0000 1111	"	41	E14	V				
		95	+14.5	"	"	"	"	"	"	E15	"	$+F_{SS1a}$ = .614 (E14-E15)			
		96	+15.5	"	"	"	"	"	"	E16	"	$+P_{SS1b}$ = .614 (E16-E14)			
												Device types 01 and 03	-.16	.16	LSB/%PS
		97	+13.5	"	"	"	"	"	"	E17	"	$+P_{SS1a}$ = .205 (E14-E17)			
		98	+16.5	"	"	"	"	"	"	E18	"	$+P_{SS1b}$ = .205 (E18-E14)			
												Device type 02	-.12	.12	"
	$-P_{SS1}$	99	+15.0	"	"	0000 0000 0000	0000 0000 0000 1111	"	"	E19	"				
		100	"	-15.5	"	"	"	"	"	E20	"	$-P_{SS1a}$ = .614 (E19-E20)			
		101	"	-14.5	"	"	"	"	"	E21	"	$-P_{SS1b}$ = .614 (E21-E19)			
												Device types 01 and 03	-.16	.16	LSB/%PS
		102	"	-13.5	"	"	"	"	"	E22	"	$-P_{SS1a}$ = .205 (E19-E22)			
		103	"	-16.5	"	"	"	"	"	E23	"	$-P_{SS1b}$ = .205 (E23-E19)			
												Device type 02	-.12	.12	"
	$+P_{SS2}$	104	"	-15.0	"	0000 0000 0000	0000 0000 0000 1111	"	"	E24	"				
		105	"	"	+4.5	"	"	"	"	E25	"	$+P_{SS2a}$ = .205 (E24-E25)			
		106	"	"	+5.5	"	"	"	"	E26	"	$+P_{SS2b}$ = .205 (E26-E24)			
												Device types 01 and 03	-.15	.16	"
3 T_A = -55°C	(All test parameters, test conditions, equations, and test limits are idential with those specified in table III, subgroup 2 (T_A = +125°C). Test numbers 54 through 106.														
4 T_A = +25°C	V_{REF}	159	+15.0	-15.0	+5.0	1111 1111 1111	1111 1111 1111 1111	KA	24	E39	V	V_{REF} = E39			
												Device types 01 and 03	5.89	6.60	V
												Device type 02	6.23	6.37	"
	V_{OS}	160	"	"	"	1111 1111 1111	0111 1111 1111 1111	"	41	E40	"	V_{OS} = 4.096* (E40)			
												Device types 01 and 03	-2	2	LSB
												Device type 02	"	"	"
	A_E	161	"	"	"	0000 0000 0000	0000 0000 0000 0111	"	"	E41	"				
		162	"	"	"	1111 1111 1111	0111 1111 1111 1111	"	"	E42	"	A_E = (E41-E42)/10			
												Device types 01 and 03	-.1	.1	%
												Device type 02	-.2	.2	"
	B_{PAE}	163	"	"	"	0000 0000 0000	0000 0000 0000 1111	"	"	E43	"				
		164	"	"	"	1111 1111 1111	1111 1111 1111 1111	"	"	E44	"	B_{PAE} = (E43-E44)/20			
												Device types 01 and 03	-.1	.1	"
												Device type 02	-.2	.2	"

See footnotes at end of table.

TABLE III. Group A inspection for all device types - Continued.

Subgroup	Symbol	Test no.	Applied voltage ref. pin no. 21 (figure 9) 22 V_{CC} (V)	14 V_{EE} (V)	13 V_{DD} (V) 1/	Applied DUT digital code-word 1<----------->12 MSB<----------->LSB	Applied ref DAC digital code-word 25<----------->40 MSB<----------->LSB	Active relays	Measurement sense lines ref. pin no. 21 Pin	Value	Unit	Equations and notes	Limits Min	Max	Units
4 T_A = +25°C	B_{POE}	165	+15.0	-15.0	+5.0	1111 1111 1111	0000 0000 0000 1111	KA	41	E45	V	B_{POE} = 2.05* (E45) Device types 01 and 03	-4	4	LSB
												Device type 02	-8	8	"
	B_{ZE}	166	"	"	"	0111 1111 1111	0111 1111 1111 1111	"	"	E46	"	B_{ZE} = 2.05* (E46) Device types 01 and 03	-2	2	"
												Device type 02	-4	4	"
												For end-point linearity error, $L_E(N)$ = 2.05*(E(N+48)-V(ideal)) V(ideal)=N1*S-E48 N1=applied DUT code-word S=(E47-E48)/4095			
		167	"	"	"	0000 0000 0000	0000 0000 0000 1111	"	"	E47	"				
		168	"	"	"	1111 1111 1111	1111 1111 1111 1111	"	"	E48	"				
	L_{E1}	169	"	"	"	1111 1111 1110	1111 1111 1110 1111	"	"	E49	"	L_{E1} = 2.05* (E49-1*S-E48) Device types 01 and 02	-.5	.5	"
												Device type 03	-.25	.25	"
	L_{E2}	170	"	"	"	1111 1111 1101	1111 1111 1101 1111	"	"	E50	"	L_{E2} = 2.05*(E50-2*S-E48)	"	"	"
	L_{E3}	171	"	"	"	0000 0000 0100	0000 0000 0100 1111	"	"	E51	"	L_{E3} = 2.05*(E51-4*S-E48)	"	"	"
	L_{E4}	172	"	"	"	0000 0000 1000	0000 0000 1000 1111	"	"	E52	"	L_{E4} = 2.05*(E52-8*S-E48)	"	"	"
	L_{E5}	173	"	"	"	0000 0001 0000	0000 0001 0000 1111	"	"	E53	"	L_{E5} = 2.05*(E53-16*S-E48)	"	"	"
	L_{E6}	174	"	"	"	0000 0010 0000	0000 0010 0000 1111	"	"	E54	"	L_{E6} = 2.05*(E54-32*S-E48)	"	"	"
	L_{E7}	175	"	"	"	0000 0100 0000	0000 0100 0000 1111	"	"	E55	"	L_{E7} = 2.05*(E55-64*S-E48)	"	"	"
	L_{E8}	176	"	"	"	0000 1000 0000	0000 1000 0000 1111	"	"	E56	"	L_{E8} = 2.05*(E56-128*S-E48)	"	"	"
						A. Record, (0000 BBBB BBBB), the sum of the code-words from tests 167-176 with positive linearity errors. 4/ B. Record, (0000 CCCC CCCC), the sum of the code-words from tests 167-176 with negative linearity errors. 4/									
	L_{E9}	177	"	"	"	0001 0000 0000	0001 0000 0000 1111	"	"	E57	"	L_{E9} = 2.05*(E57-256*S-E48) Device types 01 and 02	-.5	.5	"
												Device type 03	-.25	.25	"
	L_{E10}	178	"	"	"	0010 0000 0000	0010 0000 0000 1111	"	"	E58	"	L_{E10} = 2.05*(E58-512*S-E48)	"	"	"
	L_{E11}	179	"	"	"	0011 0000 0000	0011 0000 0000 1111	"	"	E59	"	L_{E11} = 2.05*(E59-768*S-E48)	"	"	"
	L_{E12}	180	"	"	"	0100 0000 0000	0100 0000 0000 1111	"	"	E60	"	L_{E12} = 2.05*(E60-1024*S-E48)	"	"	"
	L_{E13}	181	"	"	"	0101 0000 0000	0101 0000 0000 1111	"	"	E61	"	L_{E13} = 2.05*(E61-1280*S-E48)	"	"	"
	L_{E14}	182	"	"	"	0110 0000 0000	0110 0000 0000 1111	"	"	E62	"	L_{E14} = 2.05*(E62-1536*S-E48)	"	"	"
	L_{E15}	183	"	"	"	0111 0000 0000	0111 0000 0000 1111	"	"	E63	"	L_{E15} = 2.05*(E63-1892*S-E48)	"	"	"
	L_{E16}	184	"	"	"	1000 0000 0000	1000 0000 0000 1111	"	"	E64	"	L_{E16} = 2.05*(E64-2048*S-E48)	"	"	"
	L_{E17}	185	"	"	"	1001 0000 0000	1001 0000 0000 1111	"	"	E65	"	L_{E17} = 2.05*(E65-2304*S-E48)	"	"	"
	L_{E18}	186	"	"	"	1010 0000 0000	1010 0000 0000 1111	"	"	E66	"	L_{E18} = 2.05*(E66-2560*S-E48)	"	"	"
	L_{E19}	187	"	"	"	1011 0000 0000	1011 0000 0000 1111	"	"	E67	"	L_{E19} = 2.05*(E67-2816*S-E48)	"	"	"
	L_{E20}	188	"	"	"	1100 0000 0000	1100 0000 0000 1111	"	"	E68	"	L_{E20} = 2.05*(E68-3072*S-E48)	"	"	"
	L_{E21}	189	"	"	"	1101 0000 0000	1101 0000 0000 1111	"	"	E69	"	L_{E21} = 2.05*(E69-3328*S-E48)	"	"	"
	L_{E22}	190	"	"	"	1110 0000 0000	1110 0000 0000 1111	"	"	E70	"	L_{E22} = 2.05*(E70-3584*S-E48)	"	"	"
	L_{E23}	191	"	"	"	1111 0000 0000	1111 0000 0000 1111	"	"	E71	"	L_{E23} = 2.05*(E71-3840*S-E48)	"	"	"
						A. Record the DUT code-word, (XXXX 0000 0000), with the most positive error. B. Record the DUT code-word, (YYYY 0000 0000), with the most negative error.									
						Determine the sum of the recorded code-words obtained from tests 167-176 and from tests 177-191 for positive errors. Measure and calculate Linearity error for the new DUT code-word (XXXX BBBB BBBB). (See table I, 5/)									
	L_{E24}	192	"	"	"	XXXX BBBB BBBB XXXX BBBB BBBB 1111		"	"	E72	"	L_{E24} = 2.05*(E72-((ON-BITS)*S)-E48) Device types 01 and 02	-.5	.5	"
												Device type 03	-.25	.25	"
						Determine the sum of the recorded code-words obtained from tests 167-176 and from tests 177-191 for negative errors. Measure and calculate Linearity error for the new DUT code-word (YYYY CCCC CCCC). (See table I, 5/)									
	L_{E25}	193	"	"	"	YYYY CCCC CCCC YYYY CCCC CCCC 1111		"	"	E73	"	L_{E25} = 2.05*(E73-((ON-BITS)*S)-E48) Device types 01 and 02	-.5	.5	"
												Device type 03	-.25	.25	"

See footnotes at end of table.

TABLE III. Group A inspection for all device types - Continued.

Subgroup	Symbol	Test no.	Applied voltage ref. pin no. 21 (figure 9) 22 V_{CC} (V)	14 V_{EE} (V)	13 V_{DD} (V) 1/	Applied DUT digital code-word 1<----------->12 MSB<----------->LSB	Applied ref DAC digital code-word 25<----------->40 MSB<----------->LSB	Active relays	Measurement sense lines ref. pin no. 21 Pin	Value	Unit	Equations and notes	Limits Min	Max	Units
4 T_A = +25°C	D_{LE1}	194	+15.0	-15.0	+5.0	1111 1111 1111	1111 1111 1111 1111	KA	41	E74	V				
		195	"	"	"	1111 1111 1110	1111 1111 1110 1111	"	"	E75	"	D_{LE1} = 2.05*(E75-E74)-1 All device types	-1.0	1.0	LSB
	D_{LE2}	196	"	"	"	1111 1111 1101	1111 1111 1101 1111	"	"	E76	"	D_{LE2} = 2.05*(E76-E75)-1	"	"	"
		197	"	"	"	1111 1111 1100	1111 1111 1100 1111	"	"	E77	"				
	D_{LE3}	198	"	"	"	1111 1111 1011	1111 1111 1011 1111	"	"	E78	"	D_{LE3} = 2.05*(E78-E77)-1	"	"	"
		199	"	"	"	1111 1111 1000	1111 1111 1000 1111	"	"	E79	"				
	D_{LE4}	200	"	"	"	1111 1111 0111	1111 1111 0111 1111	"	"	E80	"	D_{LE4} = 2.05*(E80-E79)-1	"	"	"
		201	"	"	"	1111 1111 0000	1111 1111 0000 1111	"	"	E81	"				
	D_{LE5}	202	"	"	"	1111 1110 1111	1111 1110 1111 1111	"	"	E82	"	D_{LE5} = 2.05*(E82-E91)-1	"	"	"
		203	"	"	"	1111 1110 0000	1111 1110 0000 1111	"	"	E83	"				
	D_{LE6}	204	"	"	"	1111 1101 1111	1111 1101 1111 1111	"	"	E84	"	D_{LE6} = 2.05*(E84-E83)-1	"	"	"
		205	"	"	"	1111 1100 0000	1111 1100 0000 1111	"	"	E85	"				
	D_{LE7}	206	"	"	"	1111 1011 1111	1111 1011 1111 1111	"	"	E86	"	D_{LE7} = 2.05*(E86-E95)-1	"	"	"
		207	"	"	"	1111 1000 0000	1111 1000 0000 1111	"	"	E87	"				
	D_{LE8}	208	"	"	"	1111 0111 1111	1111 0111 1111 1111	"	"	E88	"	D_{LE8} = 2.05*(E88-E87)-1	"	"	"
		209	"	"	"	1111 0000 0000	1111 0000 0000 1111	"	"	E89	"				
	D_{LE9}	210	"	"	"	1110 1111 1111	1110 1111 1111 1111	"	"	E90	"	D_{LE9} = 2.05*(E90-E89)-1	"	"	"
		211	"	"	"	1110 0000 0000	1100 0000 0000 1111	"	"	E91	"				
	D_{LE10}	212	"	"	"	1101 1111 1111	1101 1111 1111 1111	"	"	E92	"	D_{LE10} = 2.05*(E92-E91)-1	"	"	"
		213	"	"	"	1100 0000 0000	1100 0000 0000 1111	"	"	E93	"				
	D_{LE11}	214	"	"	"	1011 1111 1111	1011 1111 1111 1111	"	"	E94	"	D_{LE11} = 2.05*(E94-E93)-1	"	"	"
		215	"	"	"	1000 0000 0000	1000 0000 0000 1111	"	"	E95	"				
	D_{LE12}	216	"	"	"	0111 1111 1111	0111 1111 1111 1111	"	"	E96	"	D_{LE12} = 2.05*(E96-E95)-1	"	"	"
5 T_A =+125°C	d_{VREF}/dT	217	"	"	"	1111 1111 1111	1111 1111 1111 1111	"	24	E97	"	d_{VREF}/dT=10000*(E97-E39)/(E39) All device types	-20	20	ppm/°C
	d_{VOS}/dT	218	"	"	"	1111 1111 1111	0111 1111 1111 1111		41	E98	"	d_{VOS}/dT=.041*(E98-E40) All device types	-.12	.12	LSB/°C
	d_{AE}/dT	219	"	"	"	0000 0000 0000	0000 0000 0000 1111		"	E99	"	d_{AE}/dT=10*(E99-E100-E41+E42)			
		220				1111 1111 1111	0111 1111 1111 1111			E100		All device types	-20	20	ppm/°C
	d_{BPOE}/dT	221	"	"	"	1111 1111 1111	0000 0000 0000 1111	KA	"	E101	"	d_{BPOE}/dT=.02*(E101-E45) All device types	-.08	.08	"
	d_{BZE}/dT	222	"	"	"	0111 1111 1111	0111 1111 1111 1111	"	"	E102	"	d_{BZE}/dT=.02*(E102-E46) All device types	-.04	.04	"
	(All test parameters, test conditions, equations, and test limits remaining are identical with those specified in table III subgroup 4, T_A = +25°C). Test numbers 167 through 216.														
6 T_A = -55°C	d_{VREF}/dT	272	+15.0	-15.0	+5.0	1111 1111 1111	1111 1111 1111 1111	KA	24	E152	V	d_{VREF}/dT=12500*(E152-E39)/(E39) All device types	-20	20	ppm/°C
	d_{VOS}/dT	273	"	"	"	1111 1111 1111	0111 1111 1111 1111		41	E153	"	d_{VOS}/dT=.051*(E153-E40) All device types	-.012	.012	LSB/°C
	d_{AE}/dT	274	"	"	"	0000 0000 0000	0000 0000 0000 0111		"	E154	"	d_{AE}/dT=12.5*(E154-E155-E41+E42)			
		275	"	"	"	1111 1111 1111	0111 1111 1111 1111			E155		All device types	-20	20	ppm/°C

See footnotes at end of table.

TABLE III. Group A inspection for all device types Continued.

Subgroup	Symbol	Test no.	Applied voltage ref. pin no. 21 (figure 9) 22 V_{CC} (V)	14 V_{EE} (V)	13 V_{DD} (V) 1/	Applied DUT digital code-word 1<----------->12 MSB<----------->LSB	Applied ref DAC digital code-word 25<----------->40 MSB<----------->LSB	Active relays	Measurement sense lines ref. pin no. 21 Pin	Value	Unit	Equations and notes	Limits Min	Max	Units
6 T_A = -55°C	d_{BPOE}/dT	276	+15.0	-15.0	+5.0	1111 1111 1111	0000 0000 0000 1111	KA	41	E156	V	d_{BPOE}/dT=.026*(E156-E45) All device types	-.08	.08	ppm/°C
	d_{BZE}/dT	277	"	"	"	0111 1111 1111	0111 1111 1111 1111	"	"	E157	"	d_{BZE}/dT=.026*(E157-E46) All device types	-.04	.04	LPS/°C
	(All test parameters, test conditions, equations, and test limits remaining are identical with those specified in table III subgroup 4, T_A = +25°C). Test numbers 167 through 216.														
7 T_A = +25°C												For end-point linearity error, LE(N)-2.05*(E(N+208)-V(ideal)) V(ideal)=N1*S-E208 N1=applied DUT code-word S=(E207-E208)/4095			
		327	+15.0	-15.0	+5.0	0000 0000 0000	0000 0000 0000 1111	KA	41	E207	V				
		328	"	"	"	1111 1111 1111	1111 1111 1111 1111	"	"	E208	"				
	L_{Emp}		Determine the code-word and the value of the maximum positive Linearity Error for all combinations of the digital input code-words from (0000 0000 0000) to (1111 1111 1111).												
		329	"	"	"	<-------N1-------->	<--------N1--------->	"	"	E209	"	L_{Emp}=2.05*(E209-N1*S-E208) Device types 01 and 02	-.5	.5	LSB
												Device type 03	-.25	.25	"
	L_{Emn}		Determine the code-word and the value of the maximum negative Linearity Error for all combinations of the digital input code-words from (0000 0000 0000) to (1111 1111 1111).												
		330	"	"	"	<-------N1-------->	<--------N1--------->	"	"	E210	"	L_{Emn}=2.05*(E210-N1*S-E208) Device types 01 and 02	-.5	.5	"
												Device type 03	-.25	.25	"
	For Linearity Error, the worst positive and negative error values, as determined by the manufacturer's abbreviated Integral Linearity Error (LE) test procedure for subgroups 7 and 8 shall be within 150 milliLSB of the worst positive and negative error values, as determined by the all codes test.														
8 T_A =+125°C	(All test parameters, test conditions, equations, and test limits are identical with those specified in table III, subgroup 7, T_A = +25°C Test numbers 327 through 330.														
8 T_A = -55°C	(All test parameters, test conditions, equations, and test limits are identical with those specified in table III, subgroup 7, T_A = +25°C Test numbers 327 through 330.														
9 T_A = +25°C	t_{SLHa}	339	+15.0	-15.0	+5.0	1111 1111 1111	0000 0000 0000		15	t001	us	t_{SLHa}=t001 (to ±1/2LSB) Device types 01 and 03	-	7	us
												Device type 02	-	5	"
	t_{SLHb}	340	"	"	"	"	"		"	t002	"	t_{SLHb}=t002 (to ±1LSB) Device types 01 and 03	-	6	"
												Device type 02	-	4	"
	t_{SLHc}	341	"	"	"	1111 1111 1111	1111 1111 1110		"	t003	"	t_{SLHc}=t003 (to ±1/2LSB) Device types 01 and 03	-	3	"
												Device type 02	-	2	"
	t_{SHLa}	342	"	"	"	0000 0000 0000	1111 1111 1111		"	t004	"	t_{SHLa}=t004 (to ±1/2LSB) Device types 01 and 03	-	7	"
												Device type 02	-	5	"
	t_{SHLb}	343	"	"	"	"	"		"	t005	"	t_{SHLb}=t005 (to ±1LSB) Device types 01 and 03	-	6	"
												Device type 02	-	4	"
	t_{SHLc}	344	"	"	"	1111 1111 1110	1111 1111 1111		"	t006	"	t_{SHLc}=t006 (to ±1/2LSB) Device types 01 and 03	-	3	"
												Device type 02	-	2	"
12 T_A = +25°C	NO	345	"	"	"	1111 1111 1111	1111 1111 1111		"	0001	u Vrms	NO=0001/100 (10Hz ≤ BW ≤ 100KHz) All device types	-	100	uV rms

See footnotes at end of table.

1/ Voltage V_{DD} is not required for device type 02.

2/ For device type 02, the V_{CC} test voltages shall be +15.0 ±1.5 V.

3/ For device type 02, the V_{EE} test voltages shall be -15.0 ±1.5 V.

4/ "B", "C", "X" and "Y" may be either a digital "0" or a digital "1" in the designated bit location.

4.3 Qualification inspection. Qualification inspection shall be in accordance with MIL-M-38510. Inspections to be performed shall be specified in method 5005 of MIL-STD-883, and herein for groups A, B, C, and D inspections (see 4.4.1 through 4.4.4).

4.4 Quality conformance inspection. Quality conformance inspection shall be in accordance with MIL-M-38510 and as specified herein. Inspections to be performed shall be those specified in method 5005 of MIL-STD-883, and herein for groups A, B, C, and D inspections (see 4.4.1 through 4.4.4).

4.4.1 Group A inspection. Group A inspection shall be in accordance with table I of method 5005 of MIL-STD-883, and as follows:

a. Tests shall be as specified in table II herein.

b. Subgroups 9, 10 and 11 shall be omitted.

c. A special subgroup shall be added to group A inspection for class S only and it shall consist of the conditions and limits as specified in table III. Subgroup 12, LTPD shall be 15.

4.4.2 Group B inspection. Group B inspection shall be in accordance with table II of method 5005 of MIL-STD-883 and as follows:

a. Electrical parameters shall be as specified in table II herein. For class S devices, delta limits shall apply only to subgroup 5 of group B inspection.

b. Steady-state life test for class S devices shall be in accordance with table IIa of method 5005 of MIL-STD-883, using the circuit shown on figure 8. If the alternate burn-in conditions are used the circuit shown on figure 7 shall be used.

4.4.3 Group C inspection. Group C inspection shall be in accordance with table III of method 5005 of MIL-STD-883 and as follows:

a. End-point electrical parameters shall be as specified in table II herein. Delta limits shall apply only to subgroup 1 of group C inspection for class B devices.

b. Steady-state life test (method 5005 of MIL-STD-883) conditions:

(1) Test condition B, using the circuit shown on figure 7; or test condition D, using the circuit shown on figure 8.

(2) T_A = +125°C minimum.

(3) Test duration: 1,000 hours, except as permitted by appendix B of MIL-STD-38510 and method 1005 of MIL-STD-883.

c. A special subgroup shall be added to the group C inspection requirements and shall consist of the tests, conditions, and limits specified for subgroup 12 of group A. The LTPD for the special subgroup shall be 15 for all classes.

4.4.4 Group D inspection. Group D inspection shall be in accordance with table IV of method 5005 of MIL-STD-883 and as follows:

a. End-point electrical parameters shall be as specified in table II herein.

b. This group shall be measured only for initial qualification and thereafter for group D tests at +25°C.

4.5 Methods of inspection. Methods of inspection shall be as specified in the appropriate tables. Electrical test circuits as prescribed herein or in the referenced test methods of MIL-STD-883 shall be acceptable. Other test circuits shall require the approval of the qualifying activity.

4.5.1 Voltage and current. All voltages given are referenced to the microcircuit ground terminal. Currents given are conventional and positive when flowing into the reference terminal.

4.5.2 Burn-in and life test cooldown procedure. When devices are measured at +25°C following application of the steady-state life or burn-in test condition, they shall be cooled to within 10°C of their power stable condition at +25°C prior to removal of the bias.

TABLE IV. Group C end-point electrical parameters.

Device type	Symbol	Delta 1/	End-point limits		
			Min	Max	Units
01,03	V_{OS}	±2	-3	+3	LSB
02	V_{OS}	±1	-3	+3	LSB
01,03	A_E	±.25	-.25	+.25	%
02	A_E	±.05	-.25	+.25	%
01,03	B_{ZE}	±4	-6	+6	LSB
02	B_{ZE}	±2	-6	+6	LSB
01	L_E	±1	-1.5	+1.5	LSB
02,03	L_E	±.25	-.5	+.5	LSB

1/ Delta limits apply to the measured value (see delta limit definition in MIL-M-38510).

5. PACKAGING

5.1 Packaging requirements. The requirements for packaging shall be in accordance with MIL-M-38510.

6. NOTES

6.1 Intended use. Microcircuits conforming to this specification are intended for original equipment design applications and logisitic support of existing equipment.

6.2 Ordering data. The acquisition document should specify the following:

a. Complete part number (see 1.2).

b. Requirements for delivery of one copy of the quality conformance inspection data pertinent to the device inspection lot to be supplied with each shipment by the device manufacturer, if applicable.

c. Requirements for certificate of compliance, if applicable.

d. Requirements for notification of change of product or process to the contracting activity in addition to notification to the qualifying activity, if applicable.

e. Requirements for failure analysis (including required test condition of method 5003 of MIL-STD-883), corrective action and reporting of results, if applicable.

f. Requirements for product assurance options.

g. Requirements for special lead lengths or lead forming, if applicable. These requirements shall not affect the part number.

h. Requirements for "JAN" marking.

6.3 Logistic support. Unless otherwise specified, microcircuits acquired for Government logistic support will be acquired to device class S for National Aeronautics and Space Administration or class B for Department of Defense (see 1.2.2) and lead finish C (see 3.3). Longer length leads and lead forming shall not affect the part number.

6.4 Abbreviations, symbols, and definitions. The abbreviations, symbols, and definitions used herein are defined in MIL-M-38510, MIL-STD-1331, and as follows:

I_{CC}, I_{EE}, I_{DD},	Input currents for positive, negative and logic voltage supplies, respectively.
I_{OSC}	Output short circuit current
I_{IL}	Digital low level input current
I_{IH}	Digital high level input current
V_{FSR}	Full scale voltage range
V_{IN}	Digital input voltage
V_{REF}	Reference voltage
d_{VREF}/dT	Reference voltage change/degree celsius
V_{OS}	Offset voltage
d_{VOS}/dT	Offset voltage change/degree celsius
A_E	Gain error
d_{AE}/dT	Gain error change/degree celsius
B_{PAE}	Bipolar gain error
B_{POE}	Bipolar offset error
d_{BPOE}/dT	Bipolar offset error change/degree celsius
B_{ZE}	Bipolar zero volt error
d_{BZE}/dT	Bipolar zero volt error change/degree celsius
P_{SS}	Power supply sensitive
L_E	Bit linearity error
D_{LE}	Differential linearity error
Z_{EA}	Zero output voltage error adjustment
A_{EA}	Gain error adjustment
Z_{REF}	Reference input resistance
t_{SLH}	Low-to-high output settling time
t_{SHL}	High-to-low output settling time
NO	Output noise voltage
T_A	Ambient temperature
θ_{JC}	Junction-to-case thermal resistance
θ_{JA}	Junction-to-ambient thermal resistance
MSB	Most significant bit
LSB	Least significant bit

Bipolar mode. Bipolar mode is the D/A converter operation mode that provides both positive and negative output voltages in response to an offset binary input code.

Bipolar zero error drift. Bipolar zero error drift is the change of the bipolar zero error with temperature with the device operating in the bipolar voltage output mode.

Bipolar gain. Bipolar gain is the gain in the bipolar mode. It is the ratio of the full scale output voltage change to the input code change in the bipolar mode. In this specification it is measure as the output voltage change between the input codes of zero and full scale.

Bipolar gain error. Bipolar gain error is the difference between the actual static gain and the ideal static gain the measured between zero and full scale.

Bipolar offset error. Bipolar offset error is the difference between the actual and the ideal output voltage with the device operating in the bipolar mode and the digital inputs at zero.

Bipolar offset error drift. Bipolar offset error drift is the change of the bipolar offset error with temperature with the device operating in the bipolar voltage output mode.

Bipolar zero error drift. Bipolar zero error drift is the change of the bipolar zero error with temperature with the device operating in the bipolar voltage output mode.

Bipolar zero error. Bipolar zero error is the difference between the actual and the ideal (0 volts) output with the device operating in the bipolar mode and with the input digital code at 1000 0000 0000.

Differential linearity error. Differential linearity error is the difference between the actual separation of two adjacent output levels and the ideal separation of one LSB.

Full-scale output voltage range. The full-scale output voltage range is the output voltage change between the input codes of all zeros to ones plus the voltage equivalent to one additional LSB.

Gain. Gain is the ratio of the output voltage change to an input code change with the device operating in the unipolar mode. In this specification it is measured between the codes of zero to full scale.

Gain drift. Gain drift is the change of gain with temperature.

Gain error. Gain error is the difference between the actual static gain and the ideal static gain.

Least significant bit. The LSB of the digital code-word is the bit that causes the least change to the output level. When the LSB changes state, the ideal output level changes by the value of the full scale range divided by 4096.

Hybrid. Hybrid technology may include many devices and/or components; such as, IC's transistors, resistors, capacitors, etc. on a single ceramic or alumina substrate in a DIP.

Monolithic. Integrated circuit monolithic technology includes all of the components; such as, transistors, resistors, capacitor, etc. on a single silicon substrate in a DIP.

Monotonicity. An ADC or DAC transfer function is monotonic if the ratio of the incremental change in the output to an incremental change in the input does not change sign over the entire full scale range.

Most significant bit. The MSB of the digital codeword is the bit that causes the most change to the output level. When the MSB changes state, the output level changes by one-half of the full scale output range.

Offset. Offset is the output voltage for an input code of all zeros.

Offset binary code. Offset binary code is the natural binary code representing the full scale range but offset by one-half of the full scale range. Offset binary code represents analog values between minus full scale for all zeros to plus full scale for all ones.

Power supply sensitivity at full scale. Power supply sensitivity at full scale is the change in the full scale output level with a change in the power supply voltage.

Resolution. Resolution of a DAC is the smallest ideal increment between two adjacent output levels over the full-scale range of the converter.

Settling time. Settling time is the elasped time from the application of a full-scale step input to the DAC to the time when the output has entered and remained within a 1/2 LSB error band around its final value.

Unipolar mode. Unipolar mode is the D/A converter operation mode that includes output voltages or currents of one polarity only.

6.5 Substitutability. The cross-reference information below is presented for the convenience of users. Microcircuits covered by this specification will functionally replace the listed generic-industry type. Generic-industry microcircuit types may not have equivalent operational performance characteristics across military temperature ranges or reliability factors equivalent to MIL-M-38510 device types and may have slight physical variations in relation to case size. The presence of this information shall not be deemed as permitting substitution of generic-industry types for MIL-M-38510 types or as a waiver of any of the provisions of MIL-M-38510.

Military device type	Generic-industry type
01	DAC 87 (Hybrid)
02	DAC 87 (Monolithic)
03	DAC 87 (Hybrid)

6.6 Handling. MOS devices must be handled with certain precautions to avoid damage due to accumulation of static charge. Input protective devices have been designed in the chip to minimize the effect of this static buildup. However, the following handling practices are recommended:

a. Devices should be handled on benches with conductive and grounded surface.

b. Ground test equipment, tools, and operator.

c. Do not handle devices by the leads.

d. Store devices in conductive foam or carriers.

e. Avoid use of plastic, rubber, or silk in MOS areas.

f. Maintain relative humidity above 50 percent.

6.7 Changes from previous issue. Asterisks are not used in this revision to identify changes with respect to the previous issue due to the extensiveness of the changes.

Custodians:
Army - ER
Navy - EC
Air Force - 17

Review activities:
Army - AR, MI
Navy - OS, SH
Air Force - 11, 19, 80, 85, 99
DLA - ES

User activities:
Army - SM
Navy - AS, CG, MC

Civil Agency Coordinating Activity:
NASA - NA

Preparing activity:
Air Force - 17

Agent:
DLA - ES

(Project 5962-0926)