MIL-M-38510/157A
9 August 1983
SUPERSEDING
MIL-M-38510/157(17)
13 February 1976

QUALIFICATION REQUIREMENTS REMOVED

MILITARY SPECIFICATION

MICROCIRCUITS, DIGITAL, TTL, MULTIPLE PORT REGISTERS, MONOLITHIC SILICON

INACTIVE FOR NEW DESIGN AFTER DATE OF THIS REVISION

This specification is approved for use by all Departments and Agencies of the Department of Defense.

1. SCOPE

1.1 Scope. This specification covers the detail requirements for monolithic silicon, TTL, multiple port registers. One product assurance class and a choice of case outlines and lead finishes are provided and are reflected in the complete part number.

1.2 Part number. The complete part number shall be in accordance with MIL-M-38510, with the exception that the "JAN" or "J" certification shall not be used.

1.2.1 Device type. The device type shall be as follows:

Device type	Circuit
01	8-bit multiple port register

1.2.2 Device class. The device class shall be the product assurance level as defined in MIL-M-38510.

1.2.3 Case outline. The case outline shall be designated as follows:

Outline letter	Case outline (see MIL-M-38510, appendix C)
E	D-2 (16-lead, 1/4" x 7/8"), dual-in-line package
F	F-5 (16-lead, 1/4" x 3/8"), flat package

1.3 Absolute maximum ratings.

Supply voltage range	-0.5 V dc to +7.0 V dc
Input voltage range	-1.5 V dc at -12 mA to +5.5 V dc
Storage temperature range	-65°C to +150°C
Maximum power dissipation, (P_D)	743 mW dc
Lead temperature (soldering, 10 seconds)	+300°C
Thermal resistance, junction-to-case (θ_{JC}):	
Case E	0.08°C/mW
Case F	0.09°C/mW
Junction temperature (T_J)	+175°C

1/ Must withstand the added P_D due to short circuit test (e.g., I_{OS}).

Beneficial comments (recommendations, additions, deletions) and any pertinent data which may be of use in improving this document should be addressed to: Rome Air Development Center (RBE-2), Griffiss AFB, NY 13441, by using the self-addressed Standardization Document Improvement Proposal (DD Form 1426) appearing at the end of this document or by letter.

1.4 Recommended operating conditions.

Supply voltage range (V_{CC})- - - - - - -	+4.5 V dc minimum to +5.5 V dc maximum
Minimum high-level input voltage (V_{IH})-	+2.0 V dc
Maximum low-level input voltage (V_{IL}) -	+0.8 V dc
Case operating temperature range (T_C) -	-55°C to +125°C

2. APPLICABLE DOCUMENTS

2.1 Government specifications and standards. Unless otherwise specified, the following specifications and standards, of the issue listed in that issue of the Department of Defense Index of Specifications and Standards specified in the solicitation, form a part of this specification to the extent specified herein.

SPECIFICATION

MILITARY

MIL-M-38510 - Microcircuits, General Specification for.

STANDARD

MILITARY

MIL-STD-883 - Test Methods and Procedures for Microelectronics.

(Copies of specifications, standards, handbooks, drawings, and publications required by manufacturers in connection with specific acquisition functions should be obtained from the contracting activity or as directed by the contracting officer.)

2.2 Order of precedence. In the event of a conflict between the text of this specification and the references cited herein, the text of this specification shall take precedence.

3. REQUIREMENTS

3.1 Detail specification. The individual item requirements shall be in accordance with MIL-M-38510, and as specified herein.

3.2 Design, construction, and physical dimensions. The design, construction, and physical dimensions shall be as specified in MIL-M-38510 and herein.

3.2.1 Terminal connections. The terminal connections shall be as specified on figure 1.

3.2.2 Timing diagram. The timing diagram shall be as specified on figue 2.

3.2.3 Logic diagram. The logic diagram shall be as specified on figure 3.

3.2.4 Case outlines. Case outlines shall be as specified in MIL-M-38510 and in 1.2.3 herein.

3.3 Lead material and finish. The lead material and finish shall be in accordance with MIL-M-38510 (see 6.5).

3.4 Electrical performance characteristics. The electrical performance characteristics are as specified in table I, and apply over the full recommended case operating temperature range, unless otherwise specified.

3.5 Electrical test requirements. The electrical test requirements shall be the subgroups specified in table II. The electrical tests for each subgroup are described in table III.

3.6 Marking. Marking shall be in accordance with MIL-M-38510 and 1.2 herein. At the option of the manufacturer, marking of the country of origin may be omitted from the body of the microcircuit, but shall be retained on the initial container. The "JAN" or "J" certification mark shall not be used.

TABLE I. Electrical performance characteristics.

Test	Symbol	Conditions	Limits Min	Limits Max	Unit
High level output voltage	V_{OH}	V_{CC} = 4.5 V, V_{IH} = 2 V I_{OH} = -0.8 mA	2.4	---	V
Low level output voltage	V_{OL}	V_{CC} = 4.5 V, V_{IH} = 2 V I_{OL} = 16 mA	---	0.4	V
Input clamp voltage	V_{IC}	V_{CC} = 4.5 V, I_{IN} = -12 mA T_A = 25°C	---	-1.5	V
High level input current	I_{IH1}	V_{CC} = 5.5 V, V_{IN} = 2.4 V	---	27	µA
High level input current	I_{IH2}	V_{CC} = 5.5 V, V_{IN} = 5.5 V	---	68	µA
Low level input current	I_{IL}	V_{CC} = 5.5 V, V_{IN} = 0.4 V	-0.48	-1.1	mA
Short circuit output current	I_{OS}	V_{CC} = 7.0 V 1/ V_{OUT} = 1.5 V	-20	-70	mA
Supply current	I_{CC}	V_{CC} = 5.5 V	---	135	mA
Propagation delay time, low-to-high-level, data to output	t_{PLH1}	V_{CC} = 5.0 V R_L = 390Ω C_L = 50 pF	25	55	ns
Propagation delay time, high-to-low-level, data to output	t_{PHL1}		25	57	ns
Propagation delay time, low-to-high-level, B_0, B_1, B_2 to Z_B	t_{PLH2}		13	47	ns
Propagation delay time, high-to-low-level, C_0, C_1, C_2 to Z_C	t_{PHL3}		18	43	ns
Propagation delay time, low-to-high-level, clock to output	t_{PLH4}		18	47	ns
Propagation delay time, high-to-low-level, clock to output	t_{PHL4}		13	36	ns

1/ Not more than one output should be shorted at a time.

3.7 Manufacturer eligibility. To be eligible to supply microcircuits to this specification, a manufacturer shall have a manufacturer certification in accordance with MIL-M-38510 for at least one line. Not necessarily the line producing the device type described herein.

3.8 Certification. Certification in accordance with MIL-M-38510 is not required for this device.

TABLE II. Electrical test requirements.

MIL-STD-883 test requirements	Subgroups (see table III) Class B devices
Interim electrical parameters (pre burn-in) (method 5004)	1
Final electrical test parameters (method 5004)	1*,2,3,7,9
Group A test requirements (method 5005)	1,2,3,7,9,10,11
Groups C and D end-point electrical parameters (method 5005)	1,2,3
Additional electrical subgroups for group C periodic inspections	None

*PDA applies to subgroup 1 (see 4.2c).

4. QUALITY ASSURANCE PROVISIONS

4.1 Sampling and inspection. Sampling and inspection procedures shall be in accordance with MIL-M-38510 and methods 5005 and 5007, as applicable, of MIL-STD-883, except as modified herein.

4.2 Screening. Screening shall be in accordance with method 5004 of MIL-STD-883, and shall be conducted on all devices prior to quality conformance inspection. The following additional criteria shall apply:

a. Burn-in test (method 1015 of MIL-STD-883).

(1) Test condition D or E, using the circuit shown on figure 4, or equivalent.

(2) T_A = +125°C minimum.

b. Interim and final electrical test parameters shall be as specified in table II, except interim electrical parameters test prior to burn-in is optional at the discretion of the manufacturer.

c. The percent defective allowable (PDA) for class B devices shall be 10 percent based on failures from group A, subgroup 1 test after cooldown as final electrical test in accordance with method 5004 of MIL-STD-883, and with no intervening electrical measurements. If interim electrical parameter tests are performed prior to burn-in, failures resulting from pre burn-in screening may be excluded from the PDA. If interim electrical parameter tests prior to burn-in are omitted, then all screening failures shall be included in the PDA. The verified failures of group A, subgroup 1, after burn-in divided by the total number of devices submitted for burn-in in that lot shall be used to determine the percent defective for that lot, and the lot shall be accepted or rejected based on the PDA for the applicable device class.

4.3 Qualification inspection. Qualification inspection is not required.

4.4 Quality conformance inspection. Quality conformance inspection shall be in accordance with MIL-M-38510, and as specified herein. Inspections to be performed shall be those specified in method 5005 of MIL-STD-883 and herein for groups A, B, C, and D inspections (see 4.4.1 through 4.4.4). Generic test data (see 6.6) may be used to satisfy the requirements for groups C and D inspections. Quality conformance inspection shall be completed on the specific devices covered by this specification before they are shipped.

4.4.1 Group A inspection. Group A inspection shall be in accordance with table I of method 5005 of MIL-STD-883 and as follows:

a. Tests shall be as specified in table II herein.

b. Subgroups 4, 5, 6, and 8 of table I of method 5005 of MIL-STD-883 shall be omitted.

4.4.2 Group B inspection. Group B inspection shall be in accordance with table II of method 5005 of MIL-STD-883. Electrical paramters shall be as specified in table II herein.

4.4.3 Group C inspection. Group C inspection shall be in accordance with table III of method 5005 of MIL-STD-883 and as follows:

a. End-point electrical test parameters shall be as specified in table II herein.

b. Steady-state life test (method 1005 of MIL-STD-883) conditions:

(1) Test condition D or E, using the circuit shown on figure 4, or equivalent.

(2) T_A = +125°C minimum.

(3) Test duration: 1,000 hours, except as permitted by appendix B of MIL-M-38510.

4.4.4 Group D inspection. Group D inspection shall be in accordance with table IV of method 5005 of MIL-STD-883 End-point electrical parameters shall be as specified in table II herein.

4.5 Methods of inspection. Methods of inspection shall be specified as follows.

4.5.1 Voltage and current. All voltages given are referenced to the microcircuit ground terminal. Currents given are conventional and positive when flowing into the referenced terminal.

5. PACKAGING

5.1 Packaging requirements. The requirements for packaging of microcircuits shall be in accordance with MIL-M-38510.

6. NOTES

6.1 Notes. The notes specified in MIL-M-38510 are applicable to this specification.

6.2 Intended use. Microcircuits conforming to this specification are intended for logistic support of existing equipment.

DEVICE TYPE 01

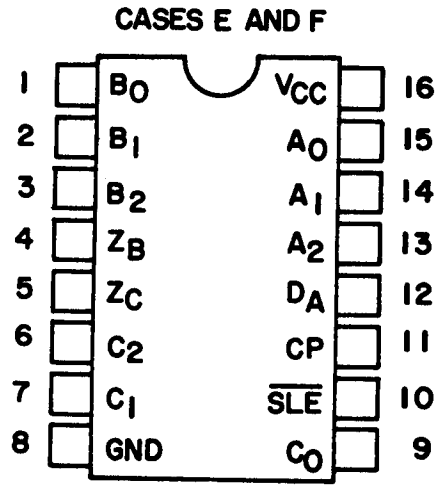

FIGURE 1. Terminal connections (top view).

DEVICE TYPE 01

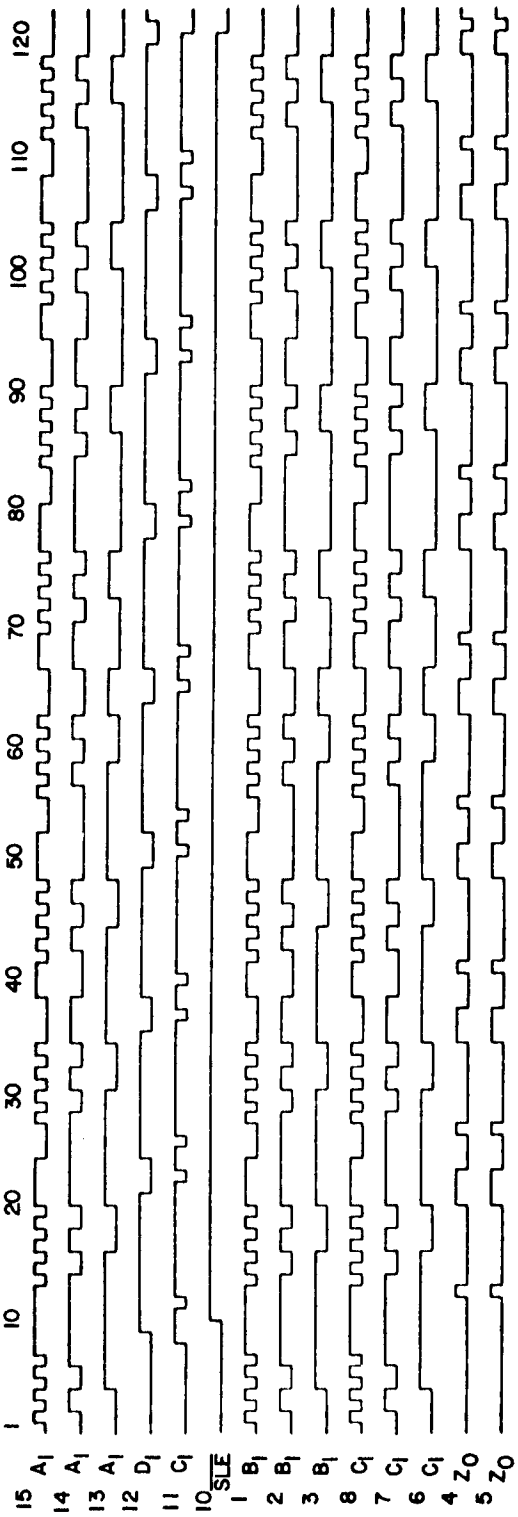

FIGURE 2. Timing diagram.

DEVICE TYPE 01

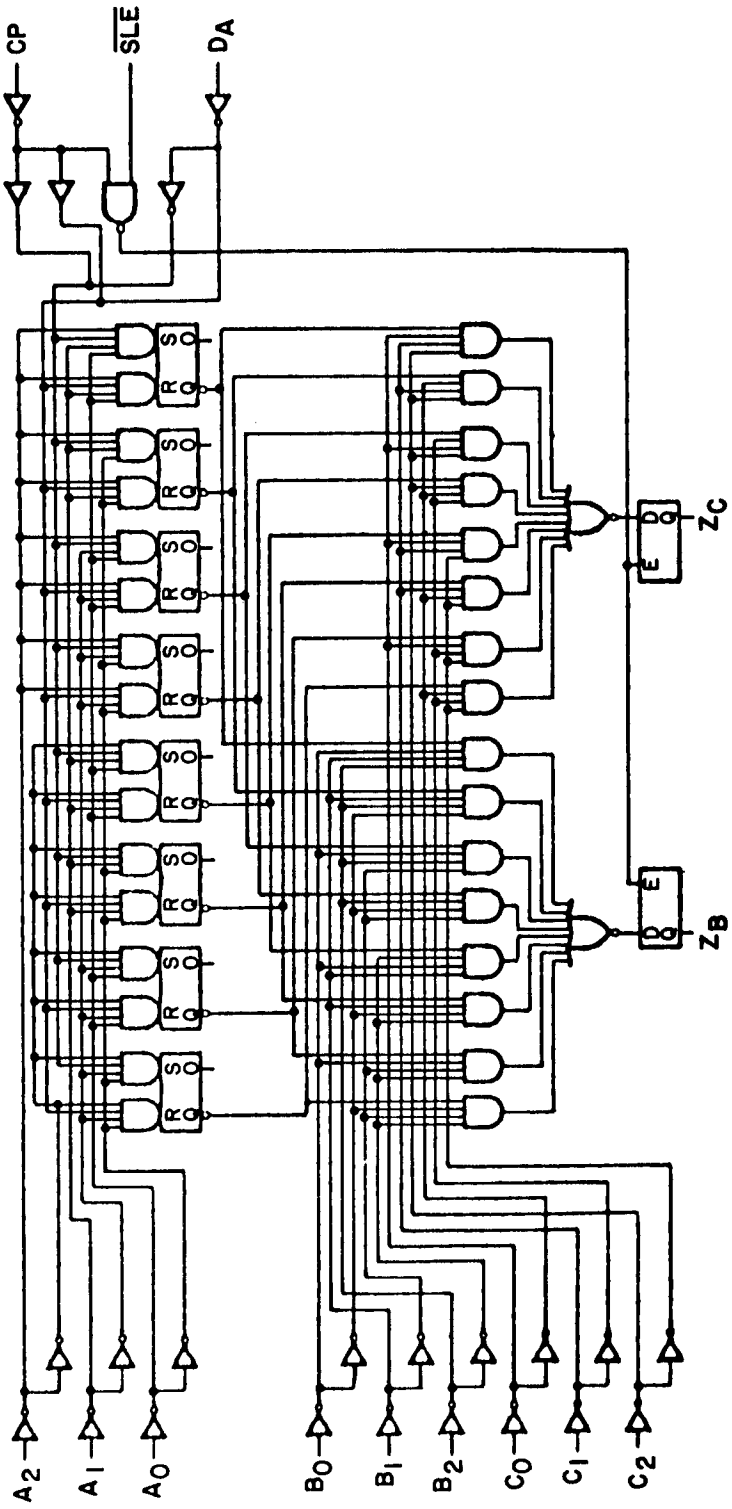

FIGURE 3. Logic diagram.

DEVICE TYPE 01

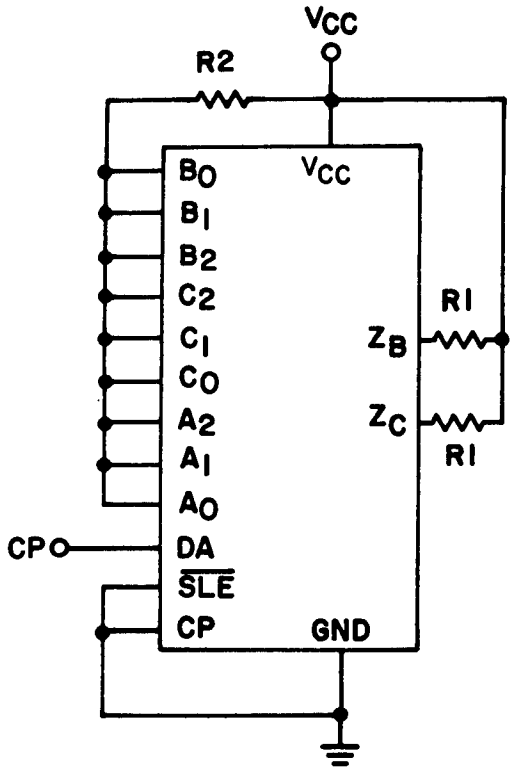

NOTES:
1. CP = 100 kHz ±50% square wave; duty cycle = 50 ±15%; V_{IH} = 2.0 V min. to 5.5 V max.; V_{IL} = -0.5 V min. to 0.8 V max.
2. V_{CC} = 5.5 V.
3. R_1 = 300Ω ±5%; R_2 = 4 kΩ ±5%.

FIGURE 4. Burn-in and life test circuit.

DEVICE TYPE 01

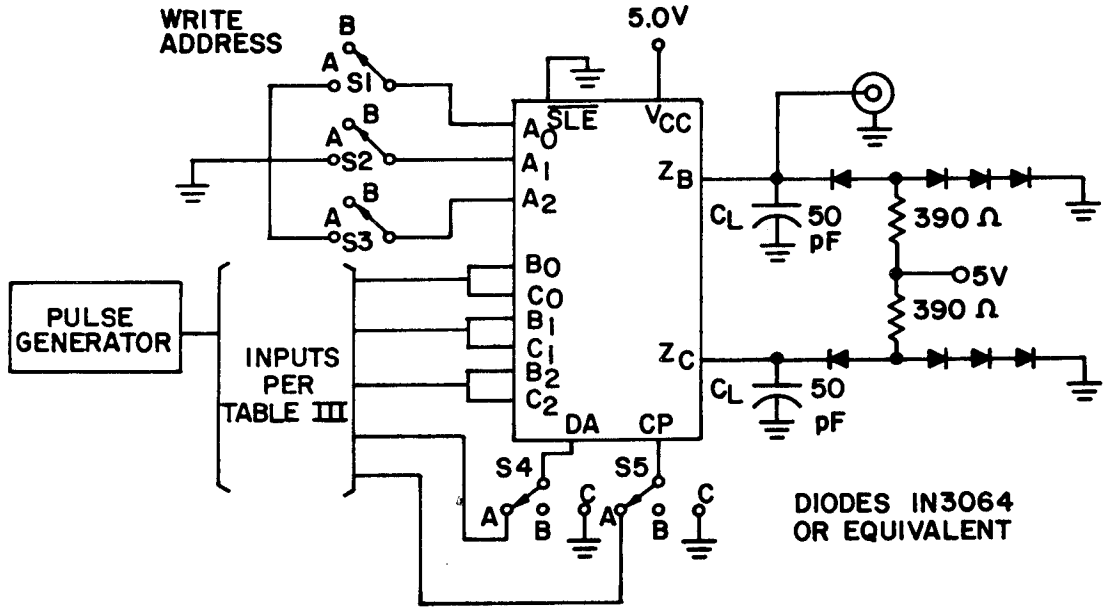

NOTES:

1. The pulse generator has the following characteristics: V_{gen} = 3 V, t_r = 5 + 1 ns, t_f = 5 + 1 ns, PRR = 1 MHz, $Z_{out} \approx 50\Omega$.
2. All diodes are 1N3064 or equivalent.
3. C_L includes probe and jig capacitance.

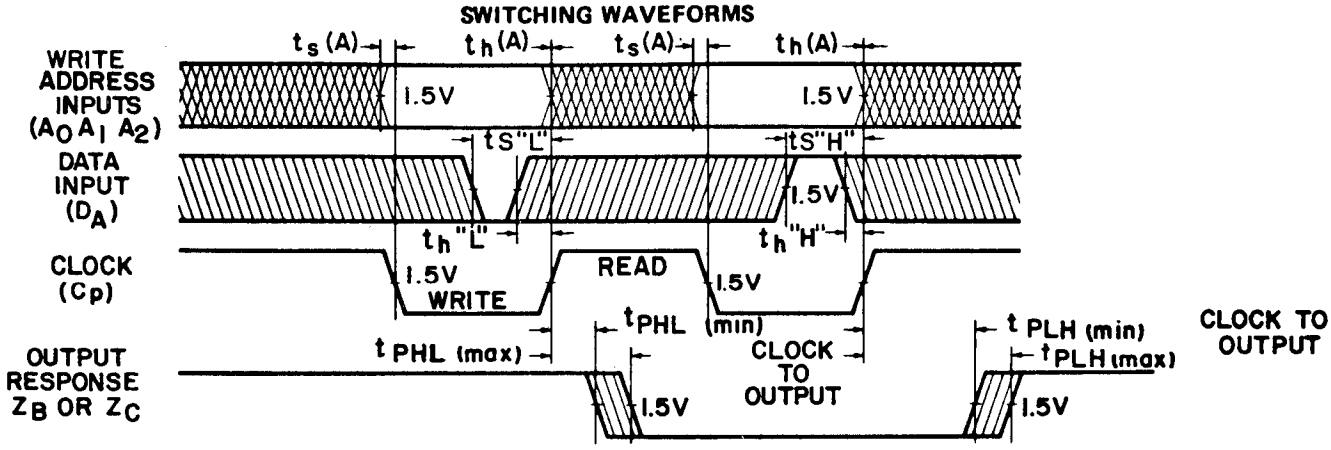

The crosshatched areas of the input waveforms indicate when inputs are permitted to change. The crosshatched areas on the output response waveforms indicate minimum and maximum propagation delays.

DATA AND WRITE ADDRESS SETUP TIMES; READ TIME (CLOCK PULSE TO OUTPUT)

FIGURE 5. Switching diagram for device type 01.

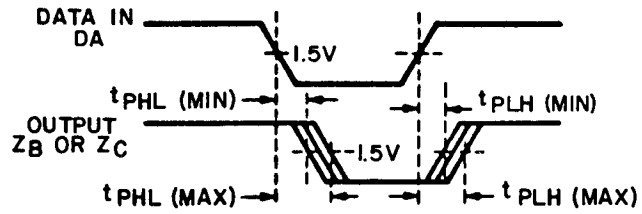

OTHER CONDITIONS

1. CP = LOW
2. $\overline{SLE}$ = LOW
3. $A_2, A_1, A_0 = B_2, B_1, B_0 = C_2, C_1, C_0$

t_{PLH}/t_{PHL} (DATA INPUT TO OUTPUT)

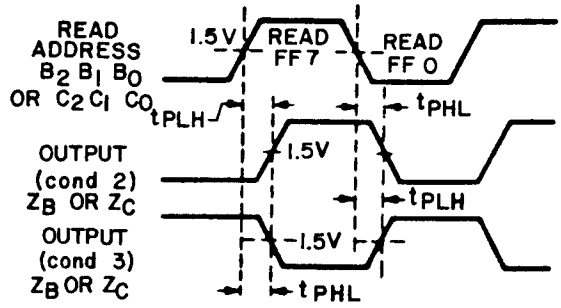

OTHER CONDITIONS

1. CP = HIGH
2. Master FF 7 = H
3. Master FF 7 = L
   Master FF 0 = L
   Master FF 0 = H

t_{PLH}/t_{PHL} (READ ADDRESS TO OUTPUT)

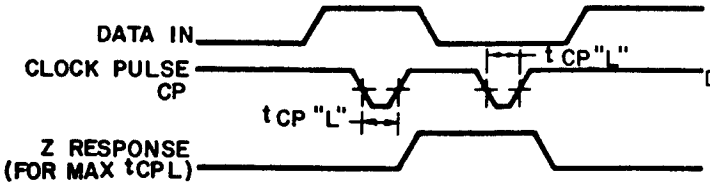

OTHER CONDITIONS

1. $\overline{SLE}$ = LOW
2. $A_2, A_1, A_0 = B_2, B_1, B_0 = C_2, C_1, C_0$

t_{CP}"L" (CLOCK LOW TIME REQUIRED TO WRITE)

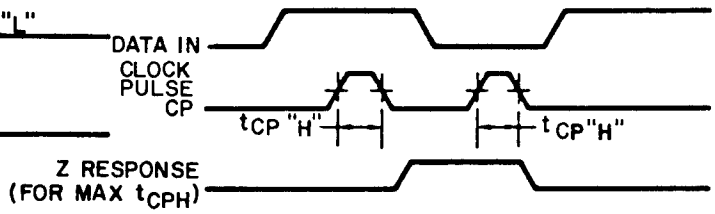

OTHER CONDITIONS

1. $\overline{SLE}$ = HIGH
2. $A_2, A_1, A_0 = B_2, B_1, B_0 = C_0, C_1, C_2$

t_{CP}"H" (CLOCK HIGH TIME REQUIRED TO READ)

DEFINITION OF TERMS

DATA SET UP TIME (t_s) — Is defined as the time required for a HIGH (t_s "H") or a LOW (t_s "L") logic level to be present at the data input prior to the clock transition from LOW to HIGH, in order for the master to recognize and store the new data.

t_{CP} "L" (CLOCK LOW TIME REQUIRED TO WRITE) — This parameter is defined as the minimum LOW clock pulse width required to write information into the master.

t_{CP} "H" (CLOCK HIGH TIME REQUIRED TO READ) — This parameter is defined as the minimum HIGH clock pulse width required to store information in the slaves.

WRITE ADDRESS SET-UP TIME t_s(A) — Is the time required for the write address to be present before the HIGH to LOW clock transition so that the correct master is addressed and other masters are not disturbed. When writing data into the 9338, the write address inputs should be stable at t_s(A) before the HIGH to LOW transition of the clock and while the clock is LOW but they may change simultaneously with the LOW to HIGH clock transition.

HOLD TIME (t_h) is defined as the minimum time following the clock transition from LOW to HIGH that the logic level must be maintained at the input in order to insure continued recognition. A negative HOLD TIME indicates that the correct logic level may be released prior to the clock transition from LOW to HIGH and still be recognized.

FIGURE 5. Switching diagram for device type 01 - Continued.

Device type 01

PRECONDITIONING TABLE FOR:	S1	S2	S3	S4	S5
t_{PLH_2} B_0 to Z_B	A	B	B	C	to C then B
	B	B	B	B	to C then B
t_{PHL_2} B_0 to Z_B	A	B	B	B	to C then B
	B	B	B	C	to C then B
t_{PLH_3} C_0 to Z_C	A	B	B	C	to C then B
	B	B	B	B	to C then B
t_{PHL_3} C_0 to Z_C	A	B	B	B	to C then B
	B	B	B	C	to C then B

PRECONDITIONING TABLE FOR:	S1	S2	S3	S4	S5
t_{PLH_2} B_1 to Z_B	B	A	B	C	to C then B
	B	B	B	B	to C then B
t_{PHL_2} B_1 to Z_B	B	A	B	B	to C then B
	B	B	B	C	to C then B
t_{PLH_3} C_1 to Z_C	B	A	B	C	to C then B
	B	B	B	B	to C then B
t_{PHL_3} C_1 to Z_C	B	A	B	B	to C then B
	B	B	B	C	to C then B
t_{PLH_2} B_2 to Z_B	B	B	A	C	to C then B
	B	B	B	B	to C then B
t_{PHL_2} B_2 to Z_B	B	B	A	B	to C then B
	B	B	B	C	to C then B
t_{PLH_3} C_2 to Z_C	B	B	A	C	to C then B
	B	B	B	B	to C then B
t_{PHL_3} C_2 to Z_C	B	B	A	B	to C then B
	B	B	B	C	to C then B

IN_A
PULSE REQUIREMENTS

Freq = 1 mHz
Amplitude = 4.0 V
Pulse width = 200 ns
$t_r = t_f$ = 5 ns ±1 ns

IN_B
PULSE REQUIREMENTS

Freq = 500 kHz
Amplitude = 4.0 V
Pulse width = 1 μs
$t_r = t_f$ = 5 ns ±1 ns

FIGURE 5. Switching diagram for device type 01 - Continued.

TABLE III. Group A inspection for device type 01.
Terminal conditions (pins not designated may be high ≥ 2.0 V; low ≤ 0.8 V; or open)

Subgroup	Symbol	MIL-STD-883 method	Case E, F	1	2	3	4	5	6	7	8	9	10	11	12	13	14	15	16	Meas. terminal	Test limits		
			Test No.	B_0	B_1	B_2	Z_B	Z_C	C_2	C_1	GND	C_0	$\overline{SLE}$	C_P	D_A	A_2	A_1	A_0	V_{CC}		Min	Max	Unit
1	V_{OH}	3006	1	GND	GND	GND	-0.8mA				GND		GND	GND	2.0 V	GND	GND	GND	4.5 V	Z_B	2.4	---	V
$T_C = +25°C$	V_{OH}	3006	2					-0.8mA	GND	GND		GND			2.0 V	GND	GND	GND		Z_C	2.4	---	
	V_{OL}	3007	3				16 mA								0.8 V					Z_B	---	0.4	
	V_{OL}	3007	4					16 mA							0.8 V					Z_C	---	0.4	
	I_{IL}	3009	5	0.4 V															5.5 V	B_0	-0.48	-1.1	mA
			6		0.4 V															B_1			
			7			0.4 V														B_2			
			8						0.4 V											C_2			
			9							0.4 V										C_1			
			10									0.4 V								C_0			
			11										0.4 V	GND						$\overline{SLE}$			
			12											0.4 V						C_P			
			13												0.4 V					D_A			
			14													0.4 V				A_2			
			15														0.4 V			A_1			
			16															0.4 V		A_0			
	I_{IH1}	3010	17	2.4 V																B_0	---	27	μA
			18		2.4 V															B_1			
			19			2.4 V														B_2			
			20						2.4 V											C_2			
			21							2.4 V										C_1			
			22									2.4 V								C_0			
			23										2.4 V							$\overline{SLE}$			
			24											2.4 V						C_P			
			25												2.4 V					D_A			
			26													2.4 V				A_2			
			27														2.4 V			A_1			
			28															2.4 V		A_0			
	I_{IH2}	3010	29	5.5 V																B_0		68	
			30		5.5 V															B_1			
			31			5.5 V														B_2			
			32						5.5 V											C_2			
			33							5.5 V										C_1			
			34									5.5 V								C_0			
			35										5.5 V							$\overline{SLE}$			
			36											5.5 V						C_P			
			37												5.5 V					D_A			
			38													5.5 V				A_2			
			39														5.5 V			A_1			
			40															5.5 V		A_0			
	I_{OS}	3011	41	GND	GND	GND	1.5 V		GND	GND		GND	GND	GND	5.5 V	GND	GND	GND	7.0 V	Z_B	-20.0	-70.0	mA
	I_{OS}	3011	42	GND	GND	GND		1.5 V	GND	GND		GND	GND	GND	5.5 V	GND	GND	GND	7.0 V	Z_C	-20.0	-70.0	mA
	I_{CC}	3005	43	GND	GND	GND			GND	GND		GND	GND	GND	GND	GND	GND	GND	5.5 V	V_{CC}	---	135	mA

TABLE III. Group A inspection for device type 01 - Continued.
Terminal conditions (pins not designated may be high $\geq$ 2.0 V; low $\leq$ 0.8 V; or open)

Subgroup	Symbol	MIL-STD-883 method	Case E, F	1	2	3	4	5	6	7	8	9	10	11	12	13	14	15	16	Meas. terminal	Test limits		
			Test No.	B_0	B_1	B_2	Z_B	Z_C	C_2	C_1	GND	C_0	$\overline{SLE}$	C_P	D_A	A_2	A_1	A_0	V_{CC}		Min	Max	Unit
1	V_{IC}		44	-12 mA							GND								4.5 V	B_0	---	-1.5	V
T_C = +25°C			45		-12 mA															B_1			
			46			-12 mA														B_2			
			47						-12 mA											C_2			
			48							-12 mA										C_1			
			49									-12 mA								C_0			
			50										-12 mA	GND						$\overline{SLE}$			
			51											-12 mA						C_P			
			52												-12 mA					D_A			
			53													-12 mA				A_2			
			54														-12 mA			A_1			
			55															-12 mA		A_0			
2	Same tests, terminal conditions and limits as for subgroup 1, except T_C = +125°C and V_{IC} tests are omitted.																						
3	Same tests, terminal conditions and limits as for subgroup 1, except T_C = -55°C and V_{IC} tests are omitted.																						
7 3/	Functional tests	3014	56	L 2/	L	L	L	L	L	L	GND	L	L	L	L	L	L	L	5.0 V	See 1/			
T_C = +25°C			57	H 2/	L	L	L	L	L	L		H	L	L	L	L	L	H					
			58	L	H	L	L	L	L	H		L	L	L	L	L	H	L					
			59	H	H	L	L	L	L	H		H	L	L	L	L	H	H					
			60	L	L	H	L	L	H	L		L	L	L	L	H	L	L					
			61	H	L	H	L	L	H	L		H	L	L	L	H	L	H					
			62	L	H	H	L	L	H	H		L	L	L	L	H	H	L					
			63	H	H	H	L	L	H	H		H	L	L	L	H	H	H					
			64	H	H	H	L	L	H	H		H	L	H	L	H	H	H					
			65	H	H	H	L	L	H	H		H	L	H	H	H	H	H					
			66	H	H	H	L	L	H	H		H	H	H	H	H	H	H					
			67	H	H	H	L	L	H	H		H	H	L	H	H	H	H					
			68	H	H	H	H	H	H	H		H	H	H	H	H	H	H					
			69	L	H	H	L	L	H	H		L	H	H	H	H	H	L					
			70	H	L	H	L	L	H	L		H	H	H	H	H	L	H					
			71	L	L	H	L	L	H	L		L	H	H	H	H	L	L					
			72	H	H	L	L	L	L	H		H	H	H	H	L	H	H					
			73	L	H	L	L	L	L	H		L	H	H	H	L	H	L					
			74	H	L	L	L	L	L	L		H	H	H	H	L	L	H					
			75	L	L	L	L	L	L	L		L	H	H	H	L	L	L					
			76	H	H	H	H	H	H	H		H	H	H	H	H	H	H					
			77	H	H	H	H	H	H	H		H	H	H	L	H	H	H					
			78	H	H	H	H	H	H	H		H	H	L	L	H	H	H					
			79	H	H	H	L	L	H	H		H	H	H	L	H	H	H					
			80	L	H	H	L	L	H	H		L	H	H	H	H	H	L					
			81	L	H	H	L	L	H	H		L	H	L	H	H	H	L					
			82	L	H	H	H	H	H	H		L	H	H	H	H	H	L					
			83	H	H	H	L	L	H	H		H	H	H	H	H	H	H					
			84	L	L	H	L	L	H	L		L	H	H	H	H	L	L					
			85	H	L	H	L	L	H	L		H	H	H	H	H	L	H					
			86	L	H	L	L	L	L	H		L	H	H	H	L	H	L					
			87	H	H	L	L	L	L	H		H	H	H	H	L	H	H					
			88	L	L	L	L	L	L	L		L	H	H	H	L	L	L					
			89	H	L	L	L	L	L	L		H	H	H	H	L	L	H					
			90	L	H	H	H	H	H	H		L	H	H	H	H	H	L					

See footnotes at end of table.

TABLE III. Group A inspection for device type 01 - Continued.
Terminal conditions (pins not designated may be high $\geq$ 2.0 V; low $\leq$ 0.8 V; or open)

Subgroup	Symbol	MIL-STD-883 method	Case E, F	1	2	3	4	5	6	7	8	9	10	11	12	13	14	15	16	Meas. terminal	Test limits		
			Test No.	B_0	B_1	B_2	Z_B	Z_C	C_2	C_1	GND	C_0	$\overline{SLE}$	C_P	D_A	A_2	A_1	A_0	V_{CC}		Min	Max	Unit
7	Func-	3014	91	L	H	H	H	H	H	H	GND	L	H	H	L	H	H	L	5.0 V				
$T_C = +25°C$	tional		92	L	H	H	H	H	H	H		L	H	L	L	H	H	L					
	tests		93	L	H	H	L	L	H	H		L	H	H	L	H	H	L					
			94	H	L	H	L	L	H	L		H	H	H	H	H	L	H					
			95	H	L	H	L	L	H	L		H	H	L	H	H	L	H					
			96	H	L	H	H	H	H	L		H	H	H	H	H	L	H					
			97	L	L	H	L	L	H	L		L	H	H	H	H	L	L					
			98	H	H	H	L	L	H	H		H	H	H	H	H	H	H					
			99	L	H	H	L	L	H	H		L	H	H	H	H	H	L					
			100	H	L	L	L	L	L	L		H	H	H	H	L	L	H					
			101	L	L	L	L	L	L	L		L	H	H	H	L	L	L					
			102	H	H	L	L	L	L	H		H	H	H	H	L	H	H					
			103	L	H	L	L	L	L	H		L	H	H	H	L	H	L					
			104	H	L	H	H	H	H	L		H	H	H	H	H	L	H					
			105	H	L	H	H	H	H	L		H	H	H	L	H	L	H					
			106	H	L	H	H	H	H	L		H	H	L	L	H	L	H					
			107	H	L	H	L	L	H	L		H	H	H	L	H	L	H					
			108	L	L	H	L	L	H	L		L	H	H	H	H	L	L					
			109	L	L	H	L	L	H	L		L	H	L	H	H	L	L					
			110	L	L	H	H	H	H	L		L	H	H	H	H	L	L					
			111	H	L	H	L	L	H	L		H	H	H	H	H	L	H					
			112	L	H	H	L	L	H	H		L	H	H	H	H	H	L					
			113	H	H	H	L	L	H	H		H	H	H	H	H	H	H					
			114	L	L	L	L	L	L	L		L	H	H	H	L	L	L					
			115	H	L	L	L	L	L	L		H	H	H	H	L	L	H					
			116	L	H	L	L	L	L	H		L	H	H	H	L	H	L			See 1/		
			117	H	H	L	L	L	L	H		H	H	H	H	L	H	H					
			118	L	L	H	H	H	H	L		L	H	H	H	H	L	L					
			119	L	L	H	H	H	H	L		L	H	H	L	H	L	L					
			120	L	L	H	H	H	H	L		L	H	L	L	H	L	L					
			121	L	L	H	L	L	H	L		L	H	H	L	H	L	L					
			122	H	H	L	L	L	L	H		H	H	H	H	L	H	H					
			123	H	H	L	L	L	L	H		H	H	L	H	L	H	H					
			124	H	H	L	H	H	L	H		H	H	H	H	L	H	H					
			125	L	H	L	L	L	L	H		L	H	H	H	L	H	L					
			126	H	L	L	L	L	L	L		H	H	H	H	L	L	H					
			127	L	L	L	L	L	L	L		L	H	H	H	L	L	L					
			128	H	H	H	L	L	H	H		H	H	H	H	H	H	H					
			129	L	H	H	L	L	H	H		L	H	H	H	H	H	L					
			130	H	L	H	L	L	H	L		H	H	H	H	H	L	H					
			131	L	L	H	L	L	H	L		L	H	H	H	H	L	L					
			132	H	H	L	H	H	L	H		H	H	H	H	L	H	H					
			133	H	H	L	H	H	L	H		H	H	H	L	L	H	H					
			134	H	H	L	H	H	L	H		H	H	L	L	L	H	H					
			135	H	H	L	L	L	L	H		H	H	H	L	L	H	H					
			136	L	H	L	L	L	L	H		L	H	H	H	L	H	L					
			137	L	H	L	L	L	L	H		L	H	L	H	L	H	L					
			138	L	H	L	H	H	L	H		L	H	H	H	L	H	L					
			139	H	H	L	L	L	L	H		H	H	H	H	L	H	H					
			140	L	L	L	L	L	L	L		L	H	H	H	L	L	L					

See footnotes at end of table.

TABLE III. Group A inspection for device type 01 - Continued.
Terminal conditions (pins not designated may be high ≥ 2.0 V; low ≤ 0.8 V; or open)

Subgroup	Symbol	MIL-STD-883 method	Case E, F	1	2	3	4	5	6	7	8	9	10	11	12	13	14	15	16	Meas. terminal	Test limits		
			Test No.	B_0	B_1	B_2	Z_B	Z_C	C_2	C_1	GND	C_0	$\overline{SLE}$	C_P	D_A	A_2	A_1	A_0	V_{CC}		Min	Max	Unit
7 3/ $T_C = +25°C$	Functional tests	3014	141	H	L	L	L	L	L	L	GND	H	H	H	H	L	L	H	5.0 V	See 1/			
			142	L	H	H	L	L	H	H		L	H	H	H	H	H	L					
			143	H	H	H	L	L	H	H		H	H	H	H	H	H	H					
			144	L	L	H	L	L	H	L		L	H	H	H	H	L	L					
			145	H	L	H	L	L	H	L		H	H	H	H	H	L	H					
			146	L	H	L	H	H	L	H		L	H	H	H	L	H	L					
			147	L	H	L	H	H	L	H		L	H	H	L	L	H	L					
			148	L	H	L	H	H	L	H		L	H	L	L	L	H	L					
			149	L	H	L	L	L	L	H		L	H	H	L	L	H	L					
			150	H	L	L	L	L	L	L		H	H	H	H	L	L	H					
			151	H	L	L	L	L	L	L		H	H	L	H	L	L	H					
			152	H	L	L	H	H	L	L		H	H	H	H	L	L	H					
			153	L	L	L	L	L	L	L		L	H	H	H	L	L	L					
			154	H	H	L	L	L	L	H		H	H	H	H	L	H	H					
			155	L	H	L	L	L	L	H		L	H	H	H	L	H	L					
			156	H	L	H	L	L	H	L		H	H	H	H	H	L	H					
			157	L	L	H	L	L	H	L		L	H	H	H	H	L	L					
			158	H	H	H	L	L	H	H		H	H	H	H	H	H	H					
			159	L	H	H	L	L	H	H		L	H	H	H	H	H	L					
			160	H	L	L	H	H	L	L		H	H	H	H	L	L	H					
			161	H	L	L	H	H	L	L		H	H	H	L	L	L	H					
			162	H	L	L	H	H	L	L		H	H	L	L	L	L	H					
			163	H	L	L	L	L	L	L		H	H	H	L	L	L	H					
			164	L	L	L	L	L	L	L		L	H	H	H	L	L	L					
			165	L	L	L	L	L	L	L		L	H	L	H	L	L	L					
			166	L	L	L	H	H	L	L		L	H	H	H	L	L	L					
			167	H	L	L	L	L	L	L		H	H	H	H	L	L	H					
			168	L	H	L	L	L	L	H		L	H	H	H	L	H	L					
			169	H	H	L	L	L	L	H		H	H	H	H	L	H	H					
			170	L	L	H	L	L	H	L		L	H	H	H	H	L	L					
			171	H	L	H	L	L	H	L		H	H	H	H	H	L	H					
			172	L	H	H	L	L	H	H		L	H	H	H	H	H	L					
			173	H	H	H	L	L	H	H		H	H	H	H	H	H	H					
			174	L	L	L	H	H	L	L		L	H	H	H	L	L	L					
			175	L	L	L	H	H	L	L		L	H	H	L	L	L	L					
			176	L	L	L	L	L	L	L		L	L	L	L	L	L	L					
			177	L	L	L	H	H	L	L		L	L	L	H	L	L	L					

See footnotes at end of table.

TABLE III. Group A inspection for device type 01 - Continued.
Terminal conditions (pins not designated may be high $\geq$ 2.0 V; low $\leq$ 0.8 V; or open)

Subgroup	Symbol	MIL-STD-883 method	Case E, F Test No.	1 B_0	2 B_1	3 B_2	4 Z_B	5 Z_C	6 C_2	7 C_1	8 GND	9 C_0	10 $\overline{SLE}$	11 C_P	12 D_A	13 A_2	14 A_1	15 A_0	16 V_{CC}	Meas. terminal	Test limits Min	Max	Unit
9	t_{PLH1}	3003	178				OUT				GND		GND	GND	IN_A				5.0 V	D_A-Z_B	25	50	ns
T_C=+25°C	t_{PLH1}	(Fig 5)	179					OUT												D_A-Z_C		50	
	t_{PHL1}		180				OUT													D_A-Z_B		54	
	t_{PHL1}		181					OUT												D_A-Z_C		54	
	t_{PLH2}		182	IN_A			OUT					IN_A		5.0 V		(Preconditioning)				B_0-Z_B	13	45	
	t_{PHL3}		183	IN_A								IN_A		5.0 V		(Preconditioning)				C_0-Z_C	18	41	
	t_{PLH2}		184		IN_A					IN_A						(Preconditioning)				B_1-Z_B	13	45	
	t_{PHL3}		185		IN_A					IN_A						(Preconditioning)				C_1-Z_C	18	41	
	t_{PLH2}		186			IN_A			IN_A							(Preconditioning)				B_2-Z_B	13	45	
	t_{PHL3}		187			IN_A			IN_A							(Preconditioning)				C_2-Z_C	18	41	
	t_{PLH4}		188											IN_A	IN_B					C_P-Z_B	18	40	
	t_{PHL4}		189											IN_A	IN_B					C_P-Z_C	13	33	
10	t_{PLH1}		190				OUT							GND	IN_A					D_A-Z_B	25	55	
T_C=+125°C	t_{PLH1}		191					OUT												D_A-Z_C		55	
	t_{PHL1}		192				OUT													D_A-Z_B		57	
	t_{PHL1}		193					OUT												D_A-Z_C		57	
	t_{PLH2}		194	IN_A			OUT							5.0 V		(Preconditioning)				B_0-Z_B	13	47	
	t_{PHL3}		195	IN_A										5.0 V		(Preconditioning)				C_0-Z_C	18	43	
	t_{PLH2}		196		IN_A					IN_A						(Preconditioning)				B_1-Z_B	13	47	
	t_{PHL3}		197		IN_A					IN_A						(Preconditioning)				C_1-Z_C	18	43	
	t_{PLH2}		198			IN_A			IN_A							(Preconditioning)				B_2-Z_B	13	47	
	t_{PHL3}		199			IN_A			IN_A							(Preconditioning)				C_2-Z_C	18	43	
	t_{PLH4}		200											IN_A	IN_B					C_P-Z_B	18	47	
	t_{PHL4}		201											IN_A	IN_B					C_P-Z_C	13	36	
11	Same tests, terminal conditions and limits as for subgroup 10, except T_A = -55°C.																						

1/ Output voltages shall be either:
(a) H = 2.4 V minimum and L = 0.4 V maximum when using a high-speed checker double comparator; or
(b) H $\geq$ 1.5 V and L $\leq$ 1.5 V when using a high-speed checker single comparator.

2/ Input voltages shown are: H = 2.0 V minimum and L = 0.8 V maximum.

3/ Subgroup 7 testing requires only a summary of attributes data.

6.3 Ordering data. The acquisition document should specify the following:

a. Complete part number (see 1.2).

b. Requirements for delivery of one copy of the quality conformance inspection data pertinent to the device inspection lot to be supplied with each shipment by the device manufacturer, if applicable.

c. Requirements for certificate of compliance, if applicable.

d. Requirements for notification of change of product or process to the contracting activity, if applicable.

e. Requirements for packaging and packing.

f. Requirements for special carriers, lead lengths, or lead forming, if applicable. These requirements shall not affect the part number. Unless otherwise specified, these requirements shall not apply to direct purchase by or direct shipment to the Government.

6.4 Abbreviations, symbols, and definitions. The abbreviations, symbols, and definitions used herein are defined in MIL-M-38510, MIL-STD-1331, and as follows:

GND - - - - - - - - - - - - - - - - - - Electrical ground (common terminal)
I_{IN} - - - - - - - - - - - - - - - - - Current flowing into an input terminal
V_{IN} - - - - - - - - - - - - - - - - - Voltage level at an input terminal

6.5 Logistic support. Lead materials and finishes (see 3.3), are interchangeable. Unless otherwise specified, microcircuits acquired for Government logistic support will be acquired to device class B (see 1.2.2) and lead material and finish C (see 3.3). Longer length leads and lead forming shall not affect the part number.

6.6 Generic test data. Generic test data may be used to satisfy the requirements of 4.4.3. Group C generic test data shall be on date codes no more than one year old and on a die in the same microcircuit group (see appendix E of MIL-M-38510) with the same material, design and process and from the same plant as the die represented. Group D (see 4.4.4) generic data shall be on date codes no more than one year old and on the same package type (see terms, definitions, and symbols of MIL-M-38510) and from the same plant as the package represented. The vendor is required to retain the generic data for a period of not less than 36 months from the date of shipment.

6.7 Substitutability. The cross-reference information below is presented for the convenience of users. Microcircuits covered by this specification will functionally replace the listed generic-industry type. Generic-industry microcircuit types may not have equivalent operational performance characteristics across military temperature ranges or reliability factors equivalent to MIL-M-38510 device types and may have slight physical variations in relation to case size. The presence of this information shall not be deemed as permitting substitution of generic-industry types for MIL-M-38510 types or as a waiver of any of the provisions of MIL-M-38510.

Military device type	Generic-industry type
01	9338

6.8 Ordering guidance. Since the qualification and certification requirements have been removed from the specification, orders may be placed immediately.

6.9 Changes from previous issue. Asterisks are not used in this revision to identify changes with respect to the previous issue, due to the extensiveness of the changes.

Custodians:
Army - ER
Navy - EC
Air Force - 17

Review activities:
Army - AR, MI
Navy - OS, SH
Air Force - 11, 19, 85, 99
DLA - ES

User activities:
Army - SM
Navy - AS, CG, MC

Agent:
DLA - ES

Preparing activity:
Air Force - 17

(Project 5962-0591-6)