QUALIFICATION REQUIREMENTS REMOVED

SUPERSEDING
MIL-M-38510/159A
11 June 1984

MILITARY SPECIFICATION

MICROCIRCUITS, DIGITAL, TTL,

SHIFT REGISTERS, MONOLITHIC SILICON

INACTIVE FOR NEW DESIGN AFTER DATE OF THIS REVISION.

This specification is approved for use by all Departments and Agencies of the Department of Defense.

1. SCOPE

1.1 Scope. This specification covers the detail requirements for monolithic silicon, TTL, shift register microcircuits. Two product assurance classes and a choice of case outlines and lead finishes are provided and are reflected in the complete part number.

1.2 Part number. The part number shall be in accordance with MIL-M-38510, with the exception that the "JAN" or "J" certification shall not be used.

1.2.1 Device types. The device types shall be as follows:

Device type	Circuit
01	4-bit shift register
02	Dual, 8-bit shift register

1.2.2 Device class. The device class shall be the product assurance level as defined in MIL-M-38510.

1.2.3 Case outlines. The case outlines shall be designated as follows:

Outline letter	Case outline (see MIL-M-38510, appendix C)
E	D-2 (16-lead, 1/4" x 7/8"), dual-in-line package
F	F-5 (16-lead, 1/4" x 3/8"), flat package

1.3 Absolute maximum ratings.

Supply voltage range	-0.5 V dc to +7.0 V dc
Input voltage range	-1.5 V dc at -12 mA to +5.5 V dc
Storage temperature range	-65°C to +150°C
Maximum power dissipation (P_D) 1/:	
Device type 01	473 mW dc
Device type 02	424 mW dc
Lead temperature (soldering, 10 seconds)	+300°C
Thermal resistance, junction-to-case (θ_{JC}):	
Cases E, F	(See MIL-M-38510, appendix C)
Junction temperature (T_J) 2/	+175°C

1/ Must withstand the added P_D due to short circuit test (e.g., I_{OS}) at one output for 5 seconds duration.

2/ Maximum junction temperature shall not be exceeded except for allowable short duration burn-in screening conditions per method 5004 of MIL-STD-883.

Beneficial comments (recommendations, additions, deletions) and any pertinent data which may be of use in improving this document should be addressed to: Rome Air Development Center (RBE-2), Griffiss AFB, NY 13441, by using the self-addressed Standardization Document Improvement Proposal (DD Form 1426) appearing at the end of this document or by letter.

DISTRIBUTION STATEMENT A. Approved for public release; distriubiton is unlimited.

1.4 Recommended operating conditions.

Supply voltage (V_{CC})	4.5 V dc minimum to 5.5 V dc maximum
Minimum high-level input voltage (V_{IH})	2.0 V dc
Maximum low-level input voltage (V_{IL})	0.8 V dc
Case operating temperature range (T_C)	-55°C to +125°C
Fan out	
Device type 01	
High logic level	12
Low logic level	6
Device type 02	
High logic level	20
Low logic level	10
Device type 01	
Setup time, data to clock	26 ns minimum
Hold time, data to clock	0 ns minimum
Setup time, $\overline{PE}$ to clock	44 ns minimum
Hold time, $\overline{PE}$ to clock	-10 ns minimum
Clock pulse width	28 ns minimum
Master reset pulse width	30 ns minimum
Recovery time, master reset-to-clock	30 ns minimum
Device type 02	
Setup time, data to clock	25 ns minimum
Hold time, data to clock	2 ns minimum
Clock pulse width	30 ns minimum
Master reset pulse width	38 ns minimum
Recovery time, master reset-to-clock	38 ns minimum

2. APPLICABLE DOCUMENTS

2.1 Government documents.

2.1.1 Specifications and standards. The following specification and standard form a part of this specification to the extent specified herein. Unless otherwise specified, the issues of these documents shall be those listed in the issue of the Department of Defense Index of Specifications and Standards and supplement thereto, cited in the solicitation.

SPECIFICATION

MILITARY

MIL-M-38510 - Microcircuits, General Specification for.

STANDARD

MILITARY

MIL-STD-883 - Test Methods and Procedures for Microelectronics.

(Copies of the specification and standard required by contractors in connection with specific acquisition functions should be obtained from the contracting activity or as directed by the contracting activity.)

2.2 Order of precedence. In the event of a conflict between the text of this specification and the references cited herein (except for associated detail specifications, specification sheets, or MS standards), the text of this specification shall take precedence. Nothing in this specification, however, shall supersede applicable laws and regulations unless a specific exemption has been obtained.

3. REQUIREMENTS

3.1 Detail specification. The individual item requirements shall be in accordance with MIL-M-38510, and as specified herein.

3.2 Design, construction, and physical dimensions. The design, construction, and physical dimensions shall be as specified in MIL-M-38510 and herein.

3.2.1 Terminal connections. The terminal connections shall be as specified on figure 1.

3.2.2 Truth tables. The truth tables shall be as specified on figure 2.

3.2.3 Logic diagrams. The logic diagrams shall be as specified on figure 3.

TABLE I. Electrical performance characteristics.

Test	Symbol	Conditions $-55^\circ C \leq T_C \leq +125^\circ C$	Device type	Limits Min	Limits Max	Unit
High level output voltage	V_{OH}	V_{CC} = 4.5 V, I_{OH} = -640 μA for $\overline{Q}_3$, -480 μA for Q_0 - Q_3	01	2.4	---	V
		V_{CC} = 4.5 V, I_{OH} = -800 μA	02	2.4	---	V
Low level output voltage	V_{OL}	V_{CC} = 4.5 V, I_{OL} = 12.8 mA for $\overline{Q}_3$, 9.6 mA for Q_0 - Q_3	01	---	0.4	V
		V_{CC} = 4.5 V, I_{OL} = 16 mA	02	---	0.4	V
High level input voltage	V_{IH}	V_{CC} = 4.5 V	All	2.0	---	V
Low level input voltage	V_{IL}	V_{CC} = 4.5 V	All	---	0.8	V
Input clamp voltage	V_{IC}	V_{CC} = 4.5 V, I_{IN} = -12 mA, T_C = +25°C	All	---	1.5	V
High level input current at any input except CP and $\overline{PE}$	I_{IH1}	V_{CC} = 5.5 V, V_{IN} = 2.4 V	01	---	40	μA
	I_{IH2}	V_{CC} = 5.5 V, V_{IN} = 5.5 V	01	---	100	μA
High level input current at CP	I_{IH3}	V_{CC} = 5.5 V, V_{IN} = 2.4 V	01	---	80	μA
	I_{IH4}	V_{CC} = 5.5 V, V_{IN} = 5.5 V	01	---	200	μA
High level input current at $\overline{PE}$	I_{IH5}	V_{CC} = 5.5 V, V_{IN} = 2.4 V	01	---	92	μA
	I_{IH6}	V_{CC} = 5.5 V, V_{IN} = 5.5 V	01	---	230	μA
High level input current at $\overline{MR}$, D_0, D_1	I_{IH1}	V_{CC} = 5.5 V, V_{IN} = 2.4 V	02	---	40	μA
	I_{IH2}	V_{CC} = 5.5 V, V_{IN} = 5.5 V	02	---	100	μA
High level input current at CP (pins 7 and 10)	I_{IH3}	V_{CC} = 5.5 V, V_{IN} = 2.4 V	02	---	60	μA
	I_{IH4}	V_{CC} = 5.5 V, V_{IN} = 5.5 V	02	---	150	μA
High level input current at D_S	I_{IH5}	V_{CC} = 5.5 V, V_{IN} = 2.4 V	02	---	80	μA
	I_{IH6}	V_{CC} = 5.5 V, V_{IN} = 5.5 V	02	---	200	μA

TABLE I. Electrical performance characteristics - Continued.

Test	Symbol	Conditions $-55°C \leq T_C \leq +125°C$	Device type	Limits Min	Limits Max	Unit
High level input current at CCP (pin 9)	I_{IH7}	V_{CC} = 5.5 V, V_{IN} = 2.4 V	02	---	120	µA
	I_{IH8}	V_{CC} = 5.5 V, V_{IN} = 5.5 V	02	---	300	µA
Low level input current at any input except CP and $\overline{PE}$	I_{IL1}	V_{CC} = 5.5 V, V_{IN} = 0.4 V	01	-0.4	-1.6	mA
Low level input current at CP	I_{IL2}	V_{CC} = 5.5 V, V_{IN} = 0.4 V	01	-0.7	-3.2	mA
Low level input current at $\overline{PE}$	I_{IL3}	V_{CC} = 5.5 V, V_{IN} = 0.4 V	01	-0.4	-3.7	mA
Low level input current at $\overline{MR}$, D_0, D_1	I_{IL1}	V_{CC} = 5.5 V, V_{IN} = 0.4 V	02	-0.7	-1.6	mA
Low level input current at CP (pins 7 and 10)	I_{IL2}	V_{CC} = 5.5 V, V_{IN} = 0.4 V	02	-1.0	-2.4	mA
Low level input current at D_S	I_{IL3}	V_{CC} = 5.5 V, V_{IN} = 0.4 V	02	-1.4	-3.2	mA
Low level input current at CCP (pin 9)	I_{IL4}	V_{CC} = 5.5 V, V_{IN} = 0.4 V	02	-2.0	-4.8	mA
Short-circuit output current	I_{OS}	V_{CC} = 5.5 V 1/	01	-20	-80	mA
			02	-20	-70	mA
Supply current	I_{CC}	V_{CC} = 5.5 V	01	---	86	mA
			02	---	77	mA
Shift right frequency	f_{sr}	V_{CC} = 5.0 V	01	15		MHz
Propagation delay time, low to high level, from clock to output	t_{PLH1}	C_L = 50 pF R_L = 390Ω ±5% See figures 4 and 5	01	3	34	ns
Propagation delay time, high to low level, from clock to output	t_{PHL1}		01	6	40	ns
Propagation delay time, high to low level $\overline{MR}$ to output, except $\overline{Q}_3$	t_{PHL2}		01	6	53	ns

See footnote at end of table.

TABLE I. Electrical performance characteristics - Continued.

Test	Symbol	Conditions $-55^{\circ}C \leq T_C \leq +125^{\circ}C$	Device type	Limits Min	Limits Max	Unit
Propagation delay time, low to high level, $\overline{MR}$ to $\overline{Q}_3$	t_{PLH2}	V_{CC} = 5.0 V C_L = 50 pF R_L = 390Ω ±5% See figures 4 and 5	01	6	53	ns
Shift right frequency	f_{sr}		02	13		MHz
Propagation delay time, low to high level, from clock to output	t_{PLH1}		02	3	33	ns
Propagation delay time, high to low level, from clock to output	t_{PHL1}		02	6	49	ns
Propagation delay time, high to low level, $\overline{MR}$ to output	t_{PHL2}		02	6	72	ns

1/ Not more than one output should be shorted at a time.

3.2.4 Case outlines. The case outlines shall be as specified in 1.2.3.

3.3 Lead material and finish. The lead material and finish shall be in accordance with MIL-M-38510 (see 6.4).

3.4 Electrical performance characteristics. The electrical performance characteristics are as specified in table I, and apply over the full recommended case operating temperature range, unless otherwise specified.

3.5 Electrical test requirements. The electrical test requirements for each device class shall be the subgroups specified in table II. The electrical tests for each subgroup are described in table III.

3.6 Marking. Marking shall be in accordance with MIL-M-38510 and 1.2 herein. At the option of the manufacturer, marking of the country of origin may be omitted from the body of the microcircuit, but shall be retained on the initial container. The "JAN" or "J" certification mark shall not be used.

3.7 Manufacturer eligibility. To be eligible to supply microcircuits to this specification, a manufacturer shall have a manufacturer certification in accordance with MIL-M-38510 for at least one line, not necessarily the line producing the device type described herein.

3.8 Certification. Certification in accordance with MIL-M-38510 is not required for this device.

TABLE II. Electrical test requirements.

MIL-STD-883 test requirements	Subgroups (see table III) Class S devices	Class B devices
Interim electrical parameters (method 5004)	1	1
Final electrical test parameters (method 5004)	1*,2,3,7, 9,10,11	1*,2,3, 7,9
Group A test requirements (method 5005)	1,2,3,7, 8,9,10,11	1,2,3,7, 9,10,11
Group B test requirements (method 5005) subgroup 5	1,2,3,7, 8,9,10,11	N/A
Group C end-point electrical parameters (method 5005)	N/A	1,2,3
Additional electrical subgroups for group C periodic inspections	N/A	None
Group D end-point electrical parameters (method 5005)	1,2,3	1,2,3

*PDA applies to subgroup 1 (see 4.2c).

4. QUALITY ASSURANCE PROVISIONS

4.1 Sampling and inspection. Sampling and inspection procedures shall be in accordance with MIL-M-38510 and methods 5005 and 5007, as applicable, of MIL-STD-883, except as modified herein.

4.2 Screening. Screening shall be in accordance with method 5004 of MIL-STD-883, and shall be conducted on all devices prior to quality conformance inspection. The following additional criteria shall apply:

a. Burn-in (method 1015 of MIL-STD-883).

(1) Test condition D, E, or F using the circuit shown on figure 6, or equivalent.

(2) T_A = +125°C minimum.

b. Interim and final electrical tests shall be as specified in table II, except interim electrical tests prior to burn-in are optional at the discretion of the manufacturer.

c. The percent defective allowable (PDA) shall be as specified in MIL-M-38510.

4.3 Qualification inspection. Qualification inspection is not required.

4.4 Quality conformance inspection. Quality conformance inspection shall be in accordance with MIL-M-38510 and as specified herein. Inspections to be performed shall be those specified in method 5005 of MIL-STD-883 and herein for groups A, B, C, and D inspections (see 4.4.1 through 4.4.4). Generic test data (see 6.5) may be used to satisfy the requirements for groups C and D inspections. Quality conformance inspection shall be completed on the specific devices covered by this specification before they are shipped.

Device type 01

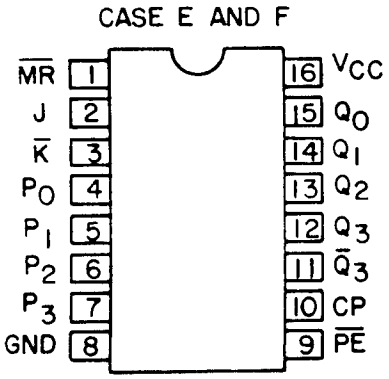

Device type 02

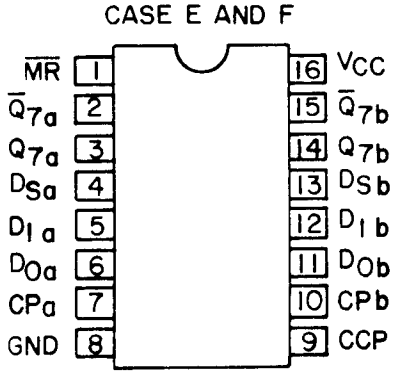

FIGURE 1. Terminal connections.

Device type 01

Serial entry.

($\overline{PE}$ = HIGH, $\overline{MR}$ = HIGH)

J	$\overline{K}$	Q_0 at t_{n+1}
L	L	L
L	H	Q_0 at t_n (no change)
H	L	$\overline{Q}_0$ at t_n (toggles)
H	H	H

Parallel entry.

($\overline{PE}$ = LOW, $\overline{MR}$ = HIGH)

D-Input (P_0, P_1, P_2, or P_3)	Output Q at t_{n+1} (Q_0, Q_1, Q_2, or Q_3)
L	L
H	H

Mode selection.

	$\overline{PE}$	P_0 P_1 P_2 P_3	J $\overline{K}$	$\overline{MR}$
Serial entry	H	X X X X	Refer to serial and parallel entry	H
Parallel entry	L	Refer to parallel entry	X X	H

(n+1) = Indicates state after next clock
H = HIGH voltage level
L = LOW voltage level
X = Irrelevant (any input, including transitions)

Device type 02

TRUTH TABLE

SHIFT SELECTION

D_S	D_0	D_1	Q_7 (t_{n+8})
L	L	X	L
L	H	X	H
H	X	L	L
H	X	H	H

n+8 = Indicates state after eight clock pulses
L = LOW voltage level
H = HIGH voltage level
X = Irrelevant (any input, including transitions).

FIGURE 2. Truth tables.

Device type 01

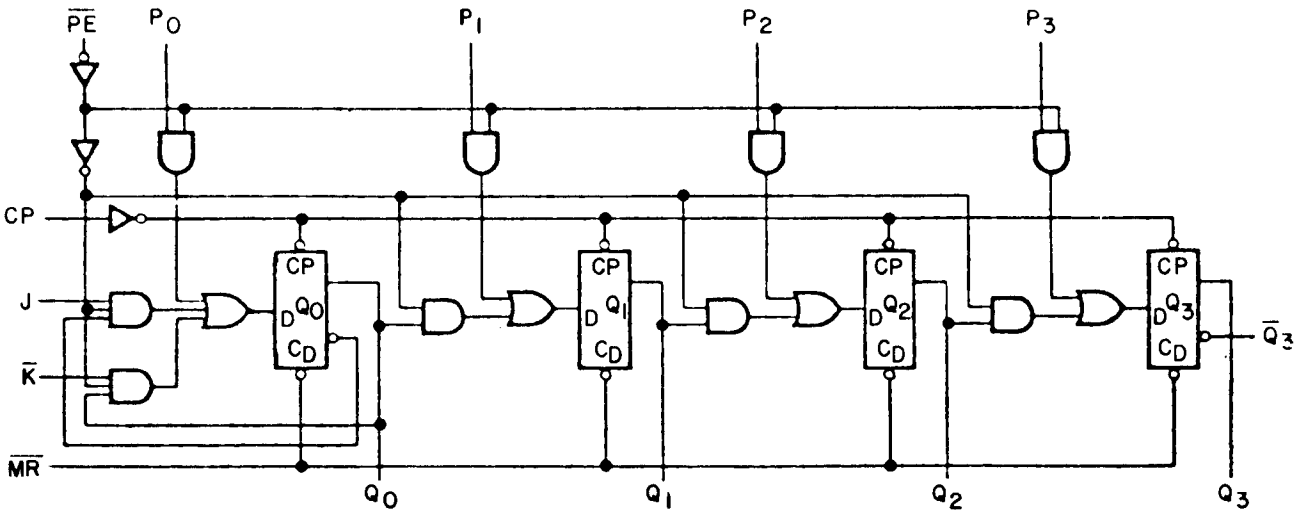

Device type 02

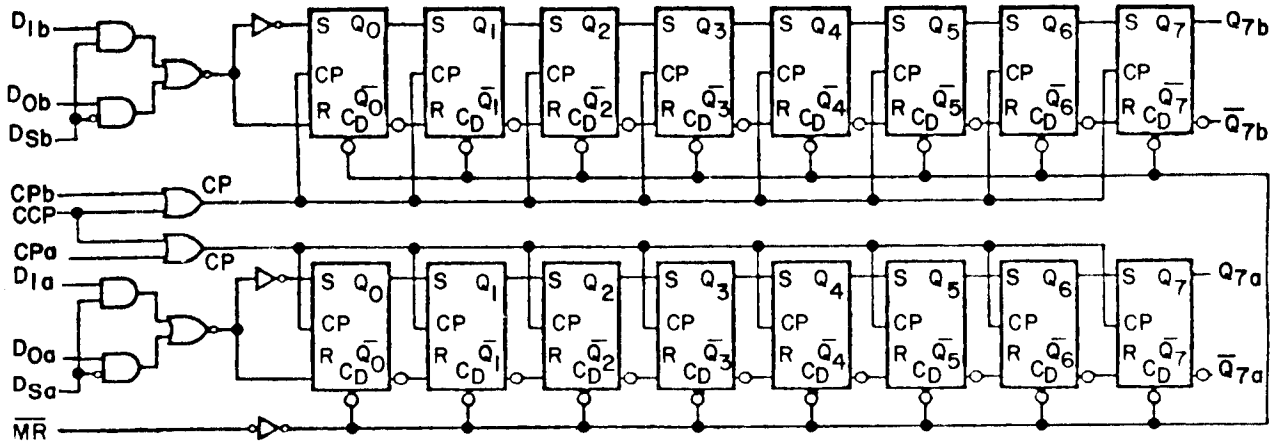

FIGURE 3. Logic diagrams.

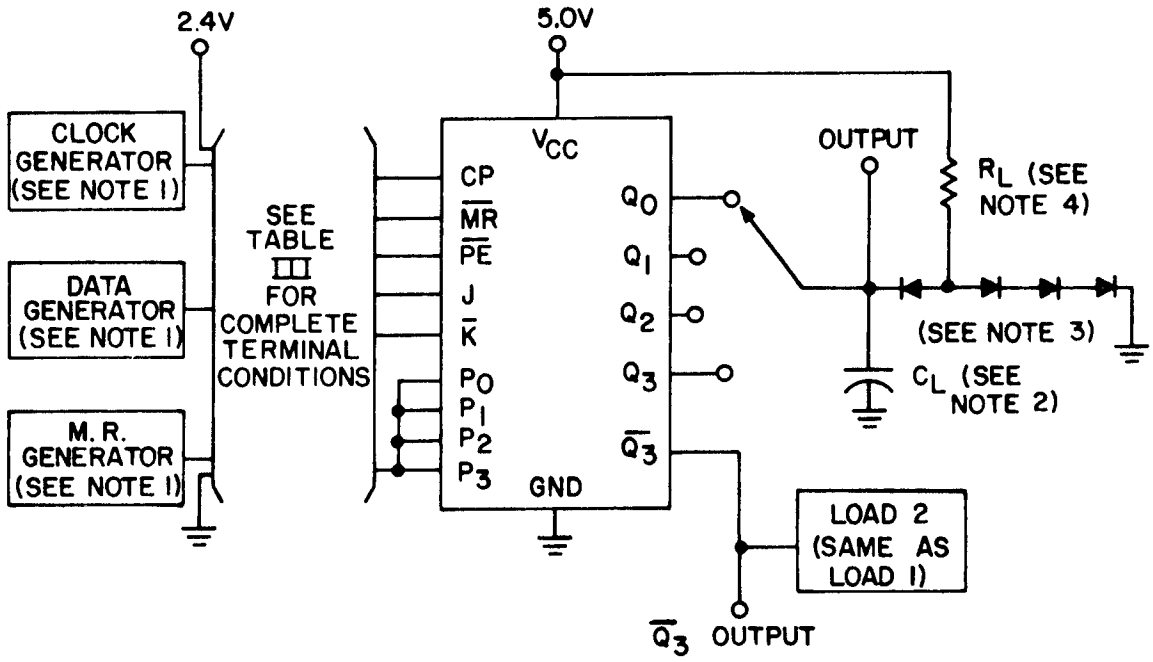

NOTES:

1. Unless otherwise specified in the notes associated with the individual tests, all pulse generators shall have the following characteristics: $Z_{OUT} \approx 50\Omega$, $t_{TLH} = t_{THL} \leq 5$ ns, $V_{IH} = 3.0$ V minimum, $V_{IL} = 0$ V.
2. $C_L = 50$ pF minimum including jig and probe capacitance.
3. All diodes are 1N3064 or equivalent.
4. $R_L = 390\Omega \pm 5\%$.

FIGURE 4. Switching time test circuit and waveforms for device type 01.

SHIFT RIGHT FREQUENCY (fsr) and CLOCK to OUTPUT (t_{PLH_1} and t_{PHL_1}).

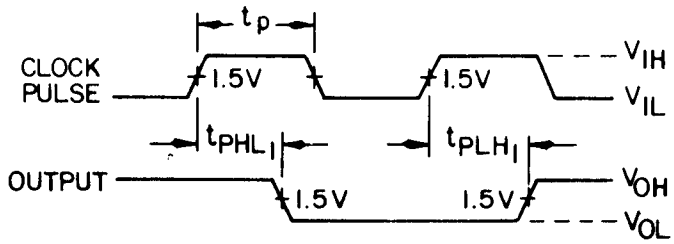

NOTES:
1. MR, J, $\overline{PE}$ = 5.0 V.
2. K = GND.
3. Clock pulse characteristics: t_{pCLK} = 28 ns minimum, duty cycle = 50%.

MASTER RESET TO OUTPUT (t_{PHL_2}, t_{PLH_2}), MASTER RESET PULSE WIDTH (t_p $\overline{MR}$), and MASTER RESET to CLOCK RECOVERY TIME (t_{rec})

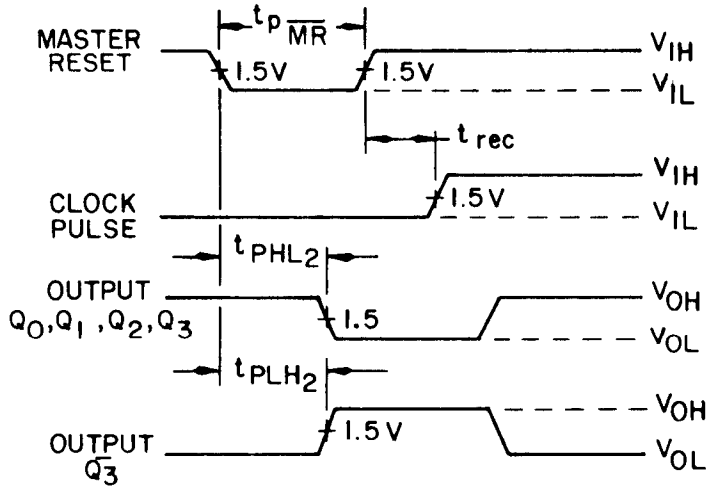

NOTES:
1. $\overline{PE}$ = GND.
2. P_0, P_1, P_2, P_3 = 5.0 V for measurements on outputs Q_0, Q_1, Q_2, and Q_3, but GND for $\overline{Q}_3$.
3. Master reset characteristics: $t_{p\overline{MR}}$ = 30 ns minimum, duty cycle = 50%.
4. Clock pulse characteristics: t_{pCLK} = 28 ns minimum, duty cycle = 50%, t_{rec} = 30 ns minimum.

FIGURE 4. Switching time test circuit and waveforms for device type 01 - Continued.

SETUP TIME (t_{SETUP}) and HOLD TIME for SERIAL DATA (J and $\overline{K}$) and PARALLEL DATA (P_0, P_1, P_2, P_3)

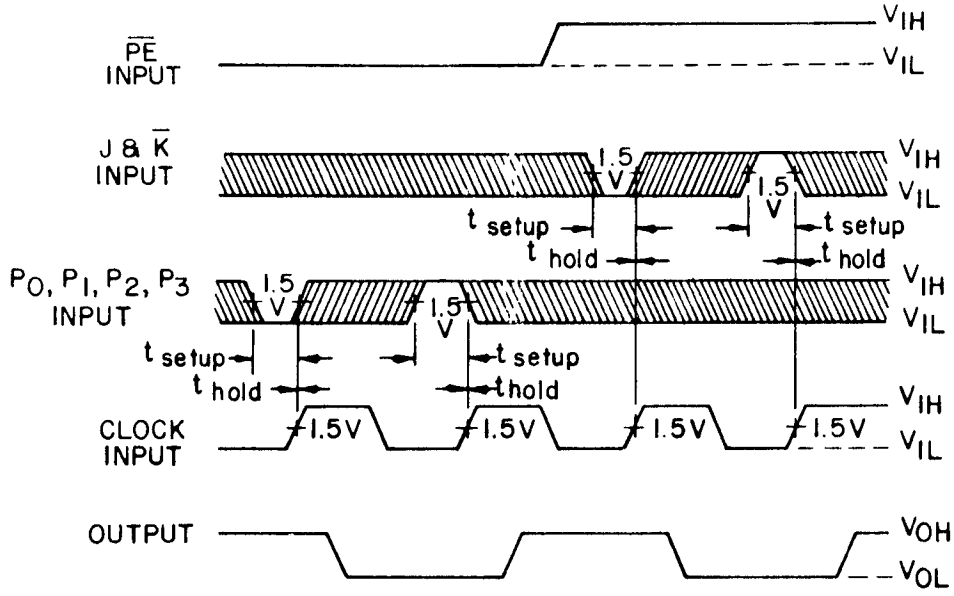

NOTES:
1. $\overline{MR}$ = 5.0 V.
2. J and $\overline{K}$ setup time affects Q_0 only.
3. $\overline{PE}$ input characteristics: GND for parallel data input, 5.0 V for serial data input.
4. J and $\overline{K}$ input characteristics: t_{SETUP} = 26 ns minimum, t_{HOLD} = 0 ns minimum.
5. P_0, P_1, P_2, P_3 input characteristics: t_{SETUP} = 26 ns minimum, t_{HOLD} = 0 ns minimum.
6. Clock input characteristics: t_{pCLK} = 28 ns minimum, duty cycle = 50%.

SETUP TIME (t_{SETUP}) and HOLD TIME (t_{HOLD}) for $\overline{PE}$ INPUT

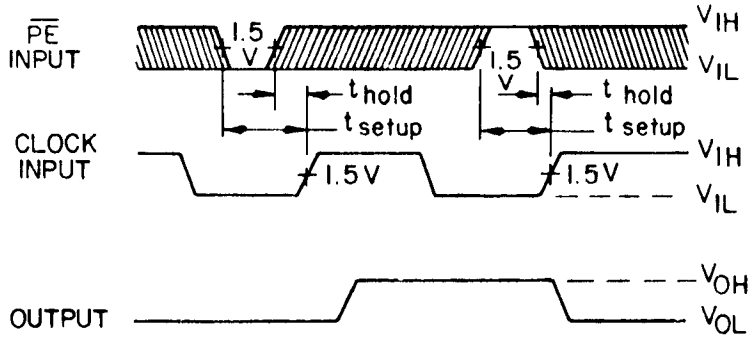

NOTES:
1. J and $\overline{K}$ = GND.
2. $\overline{MR}$, P_0, P_1, P_2, P_3 = 5.0 V.
3. $\overline{PE}$ input characteristics: t_{SETUP} = 44 ns minimum, t_{HOLD} = -10 ns minimum.
4. Clock input characteristics: t_{pCLK} = 28 ns minimum, duty cycle = 50%.

FIGURE 4. Switching time test circuit and waveforms for device type 02 - Continued.

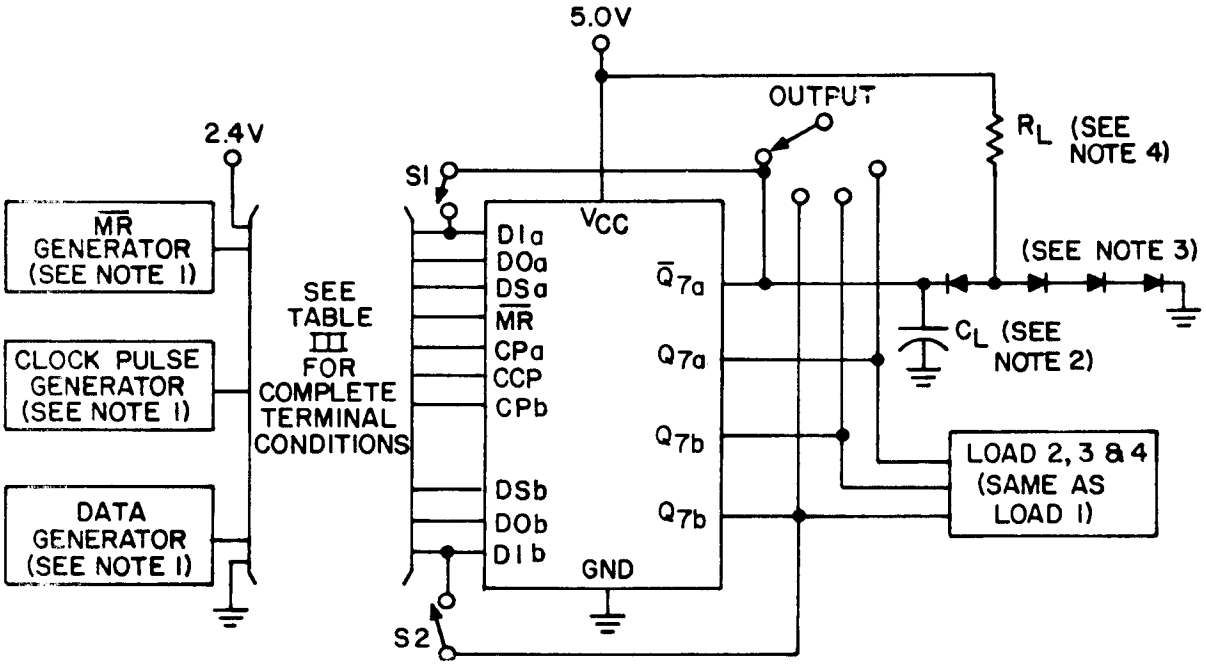

NOTES:

1. Unless otherwise specified in the notes associated with the individual tests, all pulse generators shall have the following characteristics: $Z_{OUT} \approx 50\Omega$, $t_{TLH} = t_{THL} \leq 5$ ns, $V_{IH} = 3.0$ V minimum, $V_{IL} = 0$ V.
2. $C_L = 50$ pF minimum including probe and jig capacitance.
3. All diodes are 1N3064 or equivalent.
4. $R_L = 390\Omega \pm 5\%$.

FIGURE 5. Switching time test circuit and waveforms for device type 02.

SHIFT RIGHT FREQUENCY (fsr) and CLOCK to OUTPUT (t_{PLH_1} and t_{PHL_1})

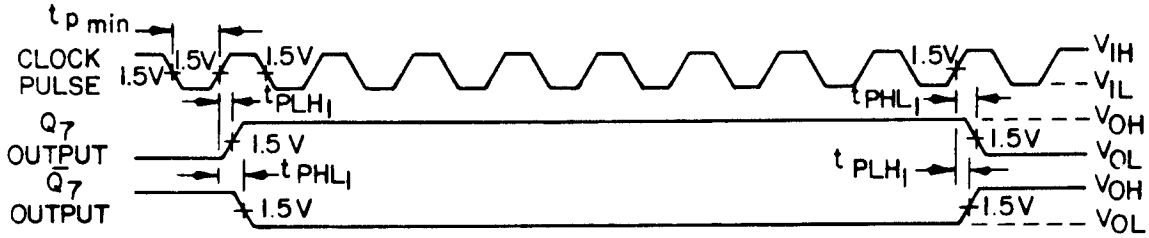

NOTES:
1. $\bar{Q}_7$ is connected to D1.
2. Other clock is grounded.
3. Clock pulse characteristics: t_p = 30 ns minimum, duty cycle = 50%.

MASTER RESET to OUTPUT (t_{PHL_2})

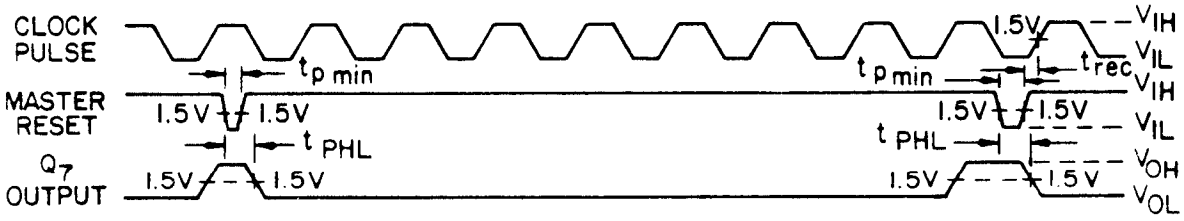

NOTES:

1. DS, D1 and D0 = 5.0 V.
2. Clock pulse characteristics: t_p = 30 ns minimum, duty cycle = 50%.
3. Master reset characteristics: t_p = 38 ns, t_{rec} = 38 ns minimum.

FIGURE 5. Switching time test circuit and waveforms for device type 02 - Continued.

SETUP TIME (t_{SETUP}) and HOLD TIME (t_{HOLD}) for DATA INPUTS

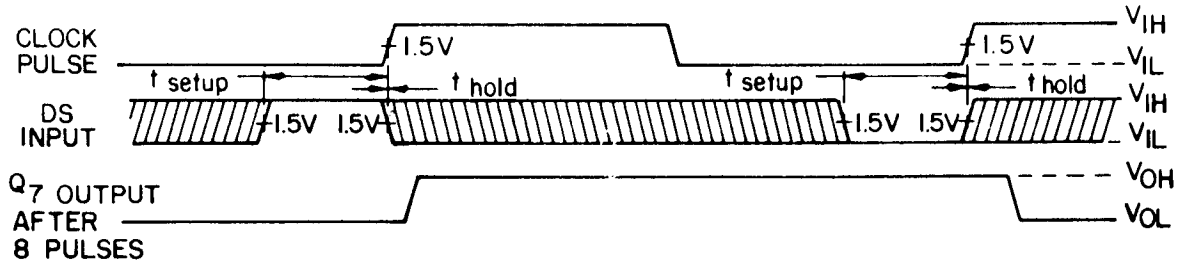

NOTES:
1. $\overline{MR}$ = 5.0 V.
2. Other clock is grounded.
3. Clock pulse characteristics: t_p = 30 ns minimum, duty cycle = 50%.
4. DS input characteristics: t_{SETUP} = 25 ns minimum, hold time = 2 ns.

FIGURE 5. Switching time test circuit and waveforms for device type 02 - Continued.

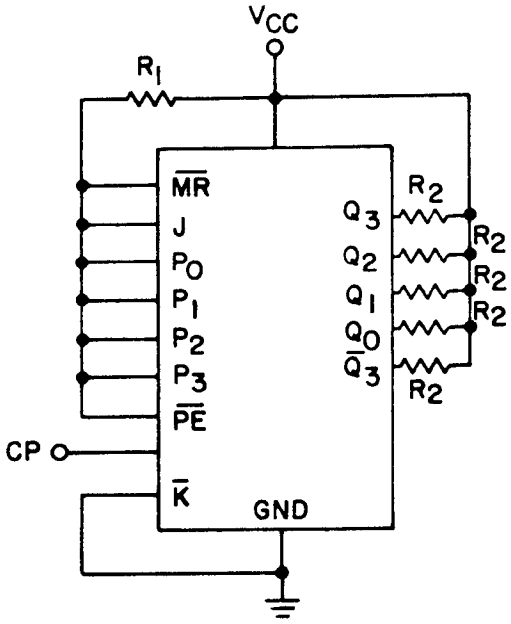

NOTES:

1. CP $\leq$1 MHz ±50% square wave; duty cycle = 50 ±15%, V_{IH} = 2.0 V minimum to 5.5 V maximum, V_{IL} = -0.5 V minimum to +0.8 V maximum.
2. V_{CC} shall be of such a value as to provide 5.0 V minimum at device terminals.
3. R1 = 470Ω.
4. R2 = 330Ω.

FIGURE 6. Burn-in and life test circuit.

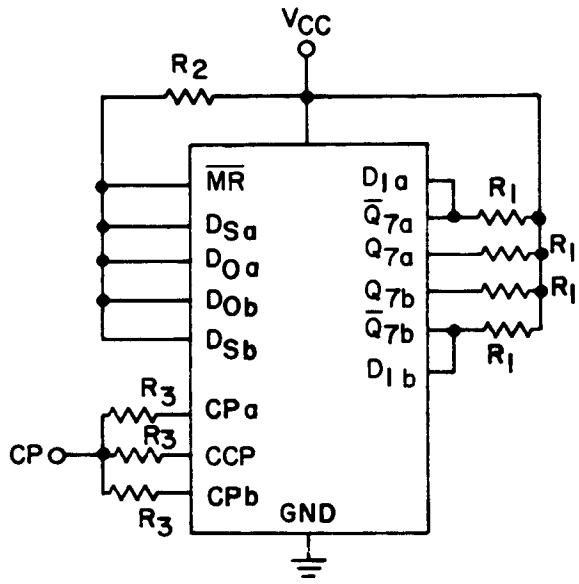

NOTES:

1. CP $\leq$1 MHz ±50% square wave; duty cycle = 50 ±15%, V_{IH} = 2.0 V minimum to 5.5 V maximum, V_{IL} = -0.5 V minimum to +0.8 V maximum.
2. V_{CC} shall be of such a value as to provide 5.0 V minimum at device terminals.
3. R1 = 330Ω.
4. R2 = 4 kΩ.
5. R3 = 10Ω.

FIGURE 6. Burn-in and life test circuit - Continued.

TABLE III. Group A inspection for device type 01.
Terminal conditions (pins not designated may be H ≥ 2.0 V; L ≤ 0.8 V; or open).

Subgroup	Symbol	MIL-STD-883 method	Cases E & F Test no.	1 $\overline{MR}$	2 J	3 $\overline{K}$	4 P_0	5 P_1	6 P_2	7 P_3	8 GND	9 $\overline{PE}$	10 CP	11 $\overline{Q}_3$	12 Q_3	13 Q_2	14 Q_1	15 Q_0	16 V_{CC}	Measured terminal	Test limits Min	Test limits Max	Unit
1 T_C = +25°C	V_{OH}	3006	1	4.5 V	GND	GND	2.0 V				GND	0.8 V	A 1/					-480 µA	4.5 V	Q_0	2.4		V
			2	"				2.0 V			"	"	"				-480 µA		"	Q_1	"		"
			3	"					2.0 V		"	"	"			-490 µA			"	Q_2	"		"
			4	"						2.0 V	"	"	"		-480 µA				"	Q_3	"		"
			5	"						0.8 V	"	"	"	-640 µA					"	$\overline{Q}_3$	"		"
			6	"	2.0 V	2.0 V	GND				"	2.0 V	"					-480 µA	"	Q_0	"		"
	V_{OL}	3007	7	"			0.8 V				"	0.8 V	"					9.6 mA	"	Q_0		0.4	"
			8	"				0.8 V			"	"	"				9.6 mA		"	Q_1		"	"
			9	"					0.3 V		"	"	"			9.6 mA			"	Q_2		"	"
			10	"						0.8 V	"	"	"		9.6 mA				"	Q_3		"	"
			11	"						2.0 V	"	"	"	12.8 mA					"	$\overline{Q}_3$		"	"
			12	0.8 V	2.0 V	2.0 V	2.0 V	2.0 V	2.0 V	2.0 V	"	2.0 V	"					9.6 mA	"	Q_0		"	"
			13	4.5 V	0.8 V	0.8 V	4.5 V				"	2.0 V	"					9.6 mA	"	Q_0		"	"
	V_{IC}		14	-12 mA							"	GND	A						"	$\overline{MR}$		-1.5	"
			15	4.5 V	-12 mA		4.5 V				"	GND							"	J		"	"
			16	GND		-12 mA					"	4.5 V							"	$\overline{K}$		"	"
			17				-12 mA				"	"							"	P_0		"	"
			18					-12 mA			"	"							"	P_1		"	"
			19						-12 mA		"	"							"	P_2		"	"
			20							-12 mA	"	"							"	P_3		"	"
			21								"	-12 mA							"	$\overline{PE}$		"	"
			22								"		-12 mA						"	CP		"	"
	I_{IH1}	3010	23 CKT A, B,	2.4 V							"								5.5 V	$\overline{MR}$		40	µA
			24 & C		2.4 V		5.5 V				"	GND	A						"	J		"	"
			25 "	GND		2.4 V					"	GND							"	$\overline{K}$		"	"
			26 "				2.4 V				"	5.5 V							"	P_0		"	"
			27 "					2.4 V			"								"	P_1		"	"
			28 "						2.4 V		"								"	P_2		"	"
			29 "							2.4 V	"								"	P_3		"	"
	I_{IH2}		30 "	5.5 V							"								"	$\overline{MR}$		100	"
			31 "		5.5 V		5.5 V				"	GND	A						"	J		"	"
			32 "	GND		5.5 V					"	GND							"	$\overline{K}$		"	"
			33 "				5.5 V				"	5.5 V							"	P_0		"	"
			34 "					5.5 V			"								"	P_1		"	"
			35 "						5.5 V		"								"	P_2		"	"
			36 "							5.5 V	"									P_3			"
	I_{IH3}		37 CKT A & C								"		2.4 V						"	CP		80	"
	I_{IH4}		38 CKT A & C								"		5.5 V						"	CP		200	"
	I_{IH3}		37 CKT B								"		2.4 V						"	CP		40	"
	I_{IH4}		38 CKT B								"		5.5 V						"	CP		100	"
	I_{IH5}		39 CKT A & C								"	2.4 V							"	$\overline{PE}$		92	"
	I_{IH6}		40 CKT A & C								"	5.5 V							"	$\overline{PE}$		230	"
	I_{IH5}		39 CKT B								"	2.4 V							"	$\overline{PE}$		40	"
	I_{IH6}		40 CKT B								"	5.5 V							"	$\overline{PE}$		100	"

See footnotes at end of device type 01.

TABLE III. Group A inspection for device type 01 - Continued.
Terminal conditions (pins not designated may be H ≥ 2.0 V; L ≤ 0.8 V; or open).

Subgroup	Symbol	MIL-STD-883 method	Cases E & F Test no.	1 $\overline{MR}$	2 J	3 $\overline{K}$	4 P_0	5 P_1	6 P_2	7 P_3	8 GND	9 $\overline{PE}$	10 CP	11 $\overline{Q}_3$	12 Q_3	13 Q_2	14 Q_1	15 Q_0	16 V_{CC}	Measured terminal	Test limits Min	Test limits Max	Unit
1 T_C = +25°C	I_{IL1}	3009	41 CKT A & C	0.4 V							GND								5.5 V	$\overline{MR}$	-0.7	-1.6	mA
			42 "	GND	0.4 V						"	4.5 V							"	J	"	"	"
			43 "	B 2/	4.5 V	0.4 V					"	4.5 V	A						"	$\overline{K}$	"	"	"
			44 "				0.4 V				"	GND							"	P_0	"	"	"
			45 "					0.4 V			"								"	P_1	"	"	"
			46 "						0.4 V		"								"	P_2	"	"	"
			47 "							0.4 V	"								"	P_3	"	"	"
	I_{IL1}		41 CKT B	0.4 V							"								"	$\overline{MR}$	-0.4	-1.3	"
			42 "	GND	0.4 V						"	4.5 V							"	J	"	"	"
			43 "	B 2/	4.5 V	0.4 V					"	4.5 V	A						"	$\overline{K}$	"	"	"
			44 "				0.4 V				"	GND							"	P_0	"	"	"
			45 "					0.4 V			"	"							"	P_1	"	"	"
			46 "						0.4 V		"	"							"	P_2	"	"	"
			47 "							0.4 V	"	"							"	P_3	"	"	"
	I_{IL2}		48 CKT A & C	4.5 V							"		0.4 V						"	CP	-1.4	-3.2	"
	I_{IL3}		49 CKT A & C								"	0.4 V							"	$\overline{PE}$	-0.7	-1.6	"
	I_{IL2}		48 CKT B	4.5 V							"		0.4 V						"	CP	-0.7	-1.6	"
	I_{IL3}		49 CKT B								"	0.4 V							"	$\overline{PE}$	-0.4	-1.3	"
	I_{OS}	3011	50	4.5 V			4.5 V				"	GND	A					GND	"	Q_0	-20	-80	"
			51	"				4.5 V			"	"	"				GND		"	Q_1	"	"	"
			52	"					4.5 V		"	"	"			GND			"	Q_2	"	"	"
			53	"						4.5 V	"	"	"		GND				"	Q_3	"	"	"
			54	"						GND	"	"	"	GND					"	$\overline{Q}_3$	"	"	"
	I_{CC}	3005	55	A							"	4.5 V	4.5 V						"	V_{CC}		86	"
2	Same tests, terminal conditions, and limits as for subgroup 1, except T_C = +125°C and V_{IC} tests are omitted.																						
3	Same tests, terminal conditions, and limits as for subgroup 1, except T_C = -55°C and V_{IC} tests are omitted.																						
7 T_C = +25°C 3/	Truth table test 4/	3014	56	B	B	B	A	A	A	A	GND	A	B	H	L	L	L	L	5.0 V				
			57	A	"	B	"	"	"	"	"	"	B	"	"	"	"	"	"				
			53	"	"	B	"	"	"	"	"	"	A	"	"	"	"	"	"				
			59	"	"	A	"	"	"	"	"	"	B	"	"	"	"	"	"				
			60	"	"	A	"	"	"	"	"	"	A	"	"	"	"	"	"				
			61	"	A	B	"	"	"	"	"	"	B	"	"	"	"	"	"				
			62	"	"	"	"	"	"	"	"	"	A	"	"	"	"	H	"				
			63	"	"	"	"	"	"	"	"	"	B	"	"	"	"	H	"				
			64	"	"	"	"	"	"	"	"	"	A	"	"	"	H	L	"				
			65	"	"	A	"	"	"	"	"	"	B	"	"	"	H	L	"				
			66	"	"	"	"	"	"	"	"	"	A	"	"	H	L	H	"		5/		
			67	"	B	"	"	"	"	"	"	"	B	"	"	H	L	"	"				
			68	"	"	"	"	"	"	"	"	"	A	L	H	L	H	"	"				
			69	"	"	B	"	"	"	"	"	"	B	L	H	L	"	"	"				
			70	"	"	B	"	"	"	"	"	"	A	H	L	H	"	L	"				
			71	"	"	A	"	"	"	"	"	B	B	H	L	"	"	L	"				
			72	"	"	"	"	"	"	"	"	"	A	L	H	"	"	H	"				
			73	"	A	"	B	B	B	B	"	"	B	L	H	"	"	H	"				
			74	"	"	"	B	B	B	B	"	"	A	H	L	L	L	L	"				
			75	"	"	"	A	A	A	A	"	"	B	H	L	L	L	L	"				
			76	"	"	"	"	"	"	"	"	"	A	L	H	H	H	H	"				
			77	"	"	"	"	"	"	"	"	"	B	L	H	H	H	H	"				
			78	B	"	"	"	"	"	"	"	"	B	H	L	L	L	L	"				
8	Repeat subgroup 7 at T_C = +125°C and T_C = -55°C.																						

See footnotes at end of device type 01.

TABLE III. Group A inspection for device type 01 - Continued.
Terminal conditions (pins not designated may be H ≥ 2.0 V; L ≤ 0.8 V; or open).

Subgroup	Symbol	MIL-STD-883 method	Cases E & F Test no.	1 $\overline{MR}$	2 J	3 $\overline{K}$	4 P_0	5 P_1	6 P_2	7 P_3	8 GND	9 $\overline{PE}$	10 CP	11 $\overline{Q}_3$	12 Q_3	13 Q_2	14 Q_1	15 Q_0	16 V_{CC}	Measured terminal	Test limits Min	Max	Unit
9 T_C = +25°C	f_{sr}	3003	79	5.0 V	5.0 V	GND					GND	5.0 V	IN					OUT	5.0 V	CP - Q_0	20		MHz
	t_{PLH1}		80	"	"	"					"	"	"					"	"	CP - Q_0	3	26	ns
	t_{PHL1}		81	"	"	"					"	"	"					"	"	CP - Q_0	6	30	"
	t_{PHL2}		82	IN			5.0 V	5.0 V	5.0 V	5.0 V	"	GND	"					"	"	$\overline{MR}$ - Q_0	6	43	"
	t_{pCLK}		83	5.0 V	5.0 V	GND					"	5.0 V	"					"	"	CP - Q_0	20		"
	t_s		84	"			IN				"	GND	"					"	"	P_0 - CP	22		"
	t_h		85	"			IN				"	GND	"					"	"	P_0 - CP	2		"
	$t_{s\overline{PE}}$		86	"	GND	GND	5.0 V	5.0 V	5.0 V	5.0 V	"	IN	"					"	"	$\overline{PE}$ - CP	40		"
	$t_{h\overline{PE}}$		87	"	GND	GND	"	"	"	"	"	IN	"					"	"	$\overline{PE}$ - CP	-8		"
	$t_{p\overline{MR}}$		88	IN			"	"	"	"	"	GND	"					"	"	$\overline{MR}$	26		"
	t_{rec}		89	IN			"	"	"	"	"	GND	"					"	"	$\overline{MR}$ - CP	26		"
	f_{sr}		90	5.0 V	5.0 V	GND					"	5.0 V	"				OUT		"	CP - Q_1	20		MHz
	t_{PLH1}		91	"	"	"					"	"	"				"		"	CP - Q_1	3	26	ns
	t_{PHL1}		92	"	"	"					"	"	"				"		"	CP - Q_1	6	30	"
	t_{PHL2}		93	IN			5.0 V	5.0 V	5.0 V	5.0 V	"	GND	"				"		"	$\overline{MR}$ - Q_1	6	43	"
	f_{sr}		94	5.0 V	5.0 V	GND					"	5.0 V	"			OUT			"	CP - Q_2	20		MHz
	t_{PLH1}		95	"	"	"					"	"	"			"			"	CP - Q_2	3	26	ns
	t_{PHL1}		96	"	"	"					"	"	"			"			"	CP - Q_2	6	30	"
	t_{PHL2}		97	IN			5.0 V	5.0 V	5.0 V	5.0 V	"	GND	"			"			"	$\overline{MR}$ - Q_2	6	43	"
	f_{sr}		98	5.0 V	5.0 V	GND					"	5.0 V	"		OUT				"	CP - Q_3	20		MHz
	t_{PLH1}		99	"	"	"					"	"	"		"				"	CP - Q_3	3	26	ns
	t_{PHL1}		100	"	"	"					"	"	"		"				"	CP - Q_3	6	30	"
	t_{PHL2}		101	IN			5.0 V	5.0 V	5.0 V	5.0 V	"	GND	"		"				"	$\overline{MR}$ - Q_3	6	43	"
	f_{sr}		102	5.0 V	5.0 V	GND					"	5.0 V	"	OUT					"	CP - $\overline{Q}_3$	20		MHz
	t_{PLH1}		103	"	"	"					"	"	"	"					"	CP - $\overline{Q}_3$	3	26	ns
	t_{PHL1}		104	"	"	"					"	"	"	"					"	CP - $\overline{Q}_3$	6	30	"
	t_{PLH2}		105	IN			5.0 V	5.0 V	5.0 V	5.0 V	"	GND	"	"					"	$\overline{MR}$ - $\overline{Q}_3$	6	43	"
10 T_C = +125°C	f_{sr}		106	5.0 V	5.0 V	GND					"	5.0 V	"					OUT	"	CP - Q_0	15		MHz
	t_{PLH1}		107	"	"	"					"	"	"					"	"	CP - Q_0	3	34	ns
	t_{PHL1}		108	"	"	"					"	"	"					"	"	CP - Q_0	6	40	"
	t_{PHL2}		109	IN			5.0 V	5.0 V	5.0 V	5.0 V	"	GND	"					"	"	$\overline{MR}$ - Q_0	6	53	"
	t_p		110	5.0 V	5.0 V	GND					"	5.0 V	"					"	"	CP - Q_0	28		"
	t_s		111	"			IN				"	GND	"					"	"	P_0 - CP	26		"
	t_h		112	"			IN				"	GND	"					"	"	P_0 - CP	0		"
	$t_{s\overline{PE}}$		113	"	GND	GND	5.0 V	5.0 V	5.0 V	5.0 V	"	IN	"					"	"	$\overline{PE}$ - CP	44		"
	$t_{h\overline{PE}}$		114	"	GND	GND	"	"	"	"	"	IN	"					"	"	$\overline{PE}$ - CP	-10		"
	$t_{p\overline{MR}}$		115	IN			"	"	"	"	"	GND						"	"	$\overline{MR}$	30		"
	t_{rec}		116	IN			"	"	"	"	"		IN					"	"	$\overline{MR}$ - CP	30		"
	f_{sr}		117	5.0 V	5.0 V	GND					"	5.0 V	"				OUT		"	CP - Q_1	15		MHz
	t_{PLH1}		118	"	"	"					"	"	"				"		"	CP - Q_1	3	34	ns
	t_{PHL1}		119	"	"	"					"	"	"				"		"	CP - Q_1	6	40	"
	t_{PHL2}		120	IN			5.0 V	5.0 V	5.0 V	5.0 V	"	GND	"				"		"	$\overline{MR}$ - Q_1	6	53	"
	f_{sr}		121	5.0 V	5.0 V	GND					"	5.0 V	"			OUT	"		"	CP - Q_2	15		MHz
	t_{PLH1}		122	"	"	"					"	"	"			"			"	CP - Q_2	3	34	ns
	t_{PHL1}		123	"	"	"					"	"	"			"			"	CP - Q_2	6	40	"
	t_{PHL2}		124	IN			5.0 V	5.0 V	5.0 V	5.0 V	"	GND	"			"			"	$\overline{MR}$ - Q_2	6	53	"
	f_{sr}		125	5.0 V	5.0 V	GND					"	5.0 V	"		OUT				"	CP - Q_3	15		MHz
	t_{PLH1}		126	"	"	"					"	"	"		"				"	CP - Q_3	3	34	ns
	t_{PHL1}		127	"	"	"					"	"	"		"				"	CP - Q_3	6	40	"
	t_{PHL2}		128	IN			5.0 V	5.0 V	5.0 V	5.0 V	"	GND	"		"				"	$\overline{MR}$ - Q_3	6	53	"

See footnotes at end of device type 01.

TABLE III. Group A inspection for device type 01 - Continued.
Terminal conditions (pins not designated may be H $\geq$ 2.0 V; L $\leq$ 0.8 V; or open).

Subgroup	Symbol	MIL-STD-883 method	Cases E & F Test no.	1 $\overline{MR}$	2 J	3 $\overline{K}$	4 P_0	5 P_1	6 P_2	7 P_3	8 GND	9 $\overline{PE}$	10 CP	11 $\overline{Q}_3$	12 Q_3	13 Q_2	14 Q_1	15 Q_0	16 V_{CC}	Measured terminal	Test limits Min	Test limits Max	Unit
10 T_C = +125°C	f_{sr}	3003	129	5.0 V	5.0 V	GND					GND	5.0 V	IN	OUT					5.0 V	CP - $\overline{Q}_3$	15		MHz
	t_{PLH1}		130	"	"	"					"	"	"	"					"	CP - $\overline{Q}_3$	3	34	ns
	t_{PHL1}		131	"	"	"					"	"	"	"					"	CP - $\overline{Q}_3$	6	40	"
	t_{PLH2}		132	IN			5.0 V	5.0 V	5.0 V	5.0 V	"	GND	"	"					"	$\overline{MR}$ - $\overline{Q}_3$	6	53	"
11	Same tests, terminal conditions, and limits as for subgroup 10, except T_C = -55°C																						

1/ A = Negative going clock pulse, except for subgroups 7 and 8.
2/ B = Momentary GND prior to applying clock pulse except for subgroups 7 and 8 (see 3/).
3/ Inputs: A = 2.4 V
B = 0.4 V
4/ The tests in subgroups 7 and 8 shall be performed in the sequence specified.
5/ Outputs: H $\geq$ 1.5 V
L $\leq$ 1.5 V

TABLE III. Group A inspection for device type 02.
Terminal conditions (pins not designated may be H $\geq$ 2.0 V; L $\leq$ 0.8 V; or open).

Subgroup	Symbol	MIL-STD-883 method	Cases E & F Test no.	1 $\overline{MR}$	2 $\overline{Q}_{7a}$	3 Q_{7a}	4 D_{Sa}	5 D_{1a}	6 D_{0a}	7 CP_a	8 GND	9 CCP	10 CP_b	11 D_{0b}	12 D_{1b}	13 D_{Sb}	14 Q_{7b}	15 $\overline{Q}_{7b}$	16 V_{CC}	Measured terminal	Test limits Min	Test limits Max	Unit
1 T_C = +25°C	V_{OH}	3006	1	GND	-800 µA						GND								4.5 V	$\overline{Q}_{7a}$	2.4		V
			2	4.5 V		-800 µA	2.0 V	2.0 V	GND	A 1/	"	GND							"	Q_{7a}	"		"
			3	4.5 V							"	GND	A	GND	2.0 V	2.0 V	-800 µA		"	$\overline{Q}_{7b}$	"		"
			4	GND							"							-800 µA	"	Q_{7b}	"		"
	V_{OL}	3007	5	4.5 V	16 mA		0.8 V	GND	2.0 V	A	"	GND							"	$\overline{Q}_{7a}$		0.4	"
			6	GND		16 mA					"								"	Q_{7a}		"	"
			7	GND							"						16 mA		"	$\overline{Q}_{7b}$		"	"
			8	4.5 V							"	GND	A	2.0 V	GND	0.8 V		16 mA	"	Q_{7b}		"	"
	V_{IC}		9	-12 mA							"								"	$\overline{MR}$		-1.5	"
			10				-12 mA	4.5 V			"								"	D_{Sa}		"	"
			11				4.5 V	-12 mA			"								"	D_{1a}		"	"
			12				GND		-12 mA		"								"	D_{0a}		"	"
			13							-12 mA	"								"	CP_a		"	"
			14								"	-12 mA							"	CCP		"	"
			15								"		-12 mA						"	CP_b		"	"
			16								"			-12 mA		GND			"	D_{0b}		"	"
			17								"				-12 mA	4.5 V			"	D_{1b}		"	"
			18								"				4.5 V	-12 mA			"	D_{Sb}		"	"
	I_{IH1}	3010	19	2.4 V							"								5.5 V	$\overline{MR}$		40	µA
			20				GND	2.4 V			"								"	D_{1a}		"	"
			21				4.5 V		2.4 V		"								"	D_{0a}		"	"
			22								"			2.4 V		4.5 V			"	D_{0b}		"	"
			23								"				2.4 V	GND			"	D_{1b}		"	"
	I_{IH2}		24	5.5 V							"								"	$\overline{MR}$		100	"
			25				GND	5.5 V			"								"	D_{1a}		"	"
			26				5.5 V		5.5 V		"								"	D_{0a}		"	"
			27								"			5.5 V		5.5 V			"	D_{0b}		"	"
			28								"				5.5 V	GND			"	D_{1b}		"	"
	I_{IH3}		29							2.4 V	"								"	CP_a		60	"
	I_{IH3}		30								"		2.4 V						"	CP_b		60	"
	I_{IH4}		31							5.5 V	"								"	CP_a		150	"
	I_{IH4}		32								"		5.5 V						"	CP_b		150	"
	I_{IH5}		33				2.4 V	GND			"								"	DS_a		30	"
	I_{IH5}		34								"				GND	2.4 V			"	DS_b		30	"
	I_{IH6}		35				5.5 V	GND			"								"	DS_a		200	"
	I_{IH6}		36								"				GND	5.5 V			"	DS_b		200	"
	I_{IH7}		37								"	2.4 V							"	CCP		120	"
	I_{IH3}		38								"	5.5 V							"	CCP		300	"
	I_{IL1}	3009	39	0.4 V							"								"	$\overline{MR}$	-0.7	-1.6	mA
			40				4.5 V	0.4 V			"								"	D_{1a}	"	"	"
			41				GND		0.4 V		"								"	D_{0a}	"	"	"
			42								"			0.4 V		GND			"	D_{0b}	"	"	"
			43								"				0.4 V	4.5 V			"	D_{1b}	"	"	"
	I_{IL2}		44							0.4 V	"								"	CP_a	-1.0	-2.4	"
			45								"		0.4 V						"	CP_b	-1.0	-2.4	"

See footnotes at end of device type 02.

TABLE III. Group A inspection for device type 02 - Continued.
Terminal conditions (pins not designated may be H ≥ 2.0 V; L ≤ 0.8 V; or open).

Subgroup	Symbol	MIL-STD-883 method	Cases E & F Test no.	1 $\overline{MR}$	2 Q_{7a}	3 $\overline{Q}_{7a}$	4 D_{Sa}	5 D_{1a}	6 D_{0a}	7 CP_a	8 GND	9 CCP	10 CP_b	11 D_{0b}	12 D_{1b}	13 D_{Sb}	14 Q_{7b}	15 $\overline{Q}_{7b}$	16 V_{CC}	Measured terminal	Test limits Min	Test limits Max	Unit
1 T_C = +25°C	I_{IL3}	3009	46				0.4 V	4.5 V			GND								5.5 V	D_{Sa}	-1.4	-3.2	mA
	I_{IL3}		47								"				4.5 V	0.4 V			"	D_{Sb}	-1.4	-3.2	"
	I_{IL4}		48								"	0.4 V							"	CCP	-2.0	-4.8	"
	I_{OS}	3011	49	GND	GND						"								"	$\overline{Q}_{7a}$	-20	-70	"
			50	4.5 V		GND	4.5 V	4.5 V		GND	"	A							"	Q_{7a}	"	"	"
			51	4.5 V							"	A	GND		5.5 V	5.5 V	GND		"	Q_{7b}	"	"	"
			52	GND							"							GND	"	$\overline{Q}_{7b}$	"	"	"
	I_{CC}	3005	53	B 2/							"								"	V_{CC}		77	"
2	Same tests, terminal conditions, and limits as for subgroup 1, except T_C = +125°C and V_{IC} tests are omitted.																						
3	Same tests, terminal conditions, and limits as for subgroup 1, except T_C = -55°C and V_{IC} tests are omitted.																						
7 T_C = +25°C 3/	Truth table test 4/	3014	54	B	H	L	A	A	B	A	GND	A	A	B	A	A	L	H	5.0 V				
			55	A	"	"	"	"	"	B	"	B	B	"	"	"	"	"	"				
			56	"	"	"	"	"	"	A	"	"	A	"	"	"	"	"	"				
			57	"	"	"	"	B	"	B	"	"	B	"	B	"	"	"	"				
			58	"	"	"	"	"	"	A	"	"	A	"	"	"	"	"	"				
			59	"	"	"	"	"	A	B	"	"	B	A	"	"	"	"	"				
			60	"	"	"	"	"	"	A	"	"	A	"	"	"	"	"	"				
			61	"	"	"	B	"	"	B	"	"	B	"	"	B	"	"	"				
			62	"	"	"	"	"	"	A	"	"	A	"	"	"	"	"	"				
			63	"	"	"	"	A	B	B	"	"	B	B	A	"	"	"	"				
			64	"	"	"	"	"	"	A	"	"	A	"	"	"	"	"	"				
			65	"	"	"	A	"	"	B	"	"	B	"	"	A	"	"	"				
			66	"	"	"	A	"	"	"	"	A	"	"	"	A	"	"	"				
			67	"	"	"	B	"	"	"	"	"	"	"	"	B	"	"	"				
			68	"	"	"	"	"	"	A	"	"	A	"	"	"	"	"	"				
			69	"	"	"	"	"	"	"	"	B	"	"	"	"	"	"	"				
			70	"	"	"	"	"	"	"	"	A	"	"	"	"	"	"	"				
			71	"	"	"	A	"	"	B	"	B	B	"	"	A	"	"	"				
			72	"	"	"	"	"	"	"	"	A	"	"	"	"	"	"	"				
			73	"	"	"	"	"	"	"	"	B	"	"	"	"	"	"	"		5/		
			74	"	L	H	"	"	"	"	"	A	"	"	"	"	H	L	"				
			75	"	L	H	"	"	"	"	"	B	"	"	"	"	H	L	"				
			76	"	H	L	"	"	"	"	"	A	"	"	"	"	L	H	"				
			77	"	"	"	"	"	"	"	"	B	"	"	"	"	"	"	"				
			78	"	"	"	"	"	"	"	"	A	"	"	"	"	"	"	"				
			79	"	"	"	"	"	"	"	"	B	"	"	"	"	"	"	"				
			80	"	L	H	"	"	"	"	"	A	"	"	"	"	H	L	"				
			81	"	L	H	"	"	"	"	"	B	"	"	"	"	H	L	"				
			82	"	H	L	"	"	"	"	"	A	"	"	"	"	L	H	"				
			83	"	H	L	"	"	"	"	"	B	"	"	"	"	L	H	"				
			84	"	L	H	"	"	"	"	"	A	"	"	"	"	H	L	"				
			85	"	L	H	"	"	"	"	"	B	"	"	"	"	H	L	"				
			86	B	H	L	"	"	"	"	"	"	"	"	"	"	L	H	"				
			87	A	H	L	"	"	"	"	"	"	"	"	"	"	"	"	"				
			88	"	"	"	"	"	"	"	"	A	"	"	"	"	"	"	"				
			89	"	"	"	"	"	"	"	"	B	"	"	"	"	"	"	"				
			90	"	"	"	"	"	"	"	"	A	"	"	"	"	"	"	"				
			91	"	"	"	"	"	"	"	"	B	"	"	"	"	"	"	"				

See footnotes at end of device type 02.

TABLE III. Group A inspection for device type 02 - Continued.
Terminal conditions (pins not designated may be H ≥ 2.0 V; L ≤ 0.8 V; or open).

Subgroup	Symbol	MIL-STD-883 method	Cases E & F Test no.	1 $\overline{MR}$	2 Q_{7a}	3 $\overline{Q}_{7a}$	4 D_{Sa}	5 D_{1a}	6 D_{0a}	7 CP_a	8 GND	9 CCP	10 CP_b	11 D_{0b}	12 D_{1b}	13 D_{Sb}	14 Q_{7b}	15 $\overline{Q}_{7b}$	15 V_{CC}	Measured terminal	Test limits Min	Test limits Max	Unit
7 T_C = +25°C 3/	Truth table test 4/	3014	92	A	H	L	A	A	B	B	GND	A	B	B	A	A	L	H	5.0 V				
			93	"	"	"	"	"	"	"	"	B	"	"	"	"	"	"	"				
			94	"	"	"	"	"	"	"	"	A	"	"	"	"	"	"	"				
			95	"	"	"	"	"	"	"	"	B	"	"	"	"	"	"	"				
			96	"	"	"	"	"	"	"	"	A	"	"	"	"	"	"	"				
			97	"	"	"	"	"	"	"	"	B	"	"	"	"	"	"	"		5/		
			98	"	"	"	"	"	"	"	"	A	"	"	"	"	"	"	"				
			99	"	"	"	"	"	"	"	"	B	"	"	"	"	"	"	"				
			100	"	"	"	"	"	"	"	"	A	"	"	"	"	"	"	"				
			101	"	"	"	"	"	"	"	"	B	"	"	"	"	"	"	"				
			102	"	L	H	"	"	"	"	"	A	"	"	"	"	H	L	"				
8	Repeat subgroup 7 at T_C = +125°C and T_C = -55°C																						
9 T_C = +25°C	f_{sr}	3003	103			OUT				IN	GND	GND	GND						5.0 V	CP - Q_{7a}	18		MHz
	f_{sr}		104							GND	"	"	IN				OUT		"	CP - Q_{7b}	18		MHz
	t_{PLH1}		105		OUT					IN	"	"	GND						"	CP - $\overline{Q}_{7a}$	3	26	ns
			106			OUT				IN	"	"	GND						"	CP - Q_{7a}	"	"	"
			107							GND	"	"	IN					OUT	"	CP - $\overline{Q}_{7b}$	"	"	"
			108							GND	"	"	IN				OUT		"	CP - Q_{7b}	"	"	"
	t_{PHL1}		109		OUT					IN	"	"	GND						"	CP - $\overline{Q}_{7a}$	6	38	"
			110			OUT				IN	"	"	GND						"	CP - Q_{7a}	"	"	"
			111							GND	"	"	IN					OUT	"	CP - $\overline{Q}_{7b}$	"	"	"
			112							"	"	"	IN				OUT		"	CP - Q_{7b}	"	"	"
	t_{PHL2}		113	IN		OUT	5.0 V	5.0 V	5.0 V	"	"	IN	GND						"	$\overline{MR}$ - Q_{7a}	"	60	"
	t_{PHL2}		114	IN						"	"	IN	"	5.0 V	5.0 V	5.0 V	OUT		"	$\overline{MR}$ - Q_{7b}	"	60	"
	t_{setup}		115 6/	5.0 V		C 7/	IN			IN	"	GND	"						"	D_S - CP_a	22		"
	t_{hold}		116 5/	5.0 V		C	IN			IN	"	"	"						"	D_S - CP_a	2		"
10 T_C = +125°C	f_{sr}		117			OUT				IN	"	"	"						"	CP - Q_{7a}	13		MHz
	f_{sr}		118							GND	"	"	IN				OUT		"	CP - Q_{7b}	13		MHz
	t_{PLH1}		119		OUT					IN	"	"	GND						"	CP - $\overline{Q}_{7a}$	3	33	ns
			120			OUT				IN	"	"	GND						"	CP - Q_{7a}	"	"	"
			121							GND	"	"	IN					OUT	"	CP - $\overline{Q}_{7b}$	"	"	"
			122							GND	"	"	IN				OUT		"	CP - Q_{7b}	"	"	"
	t_{PHL1}		123		OUT					IN	"	"	GND						"	CP - $\overline{Q}_{7a}$	6	49	"
			124			OUT				IN	"	"	GND						"	CP - Q_{7a}	"	"	"
			125							GND	"	"	IN					OUT	"	CP - $\overline{Q}_{7b}$	"	"	"
			126							"	"	"	IN				OUT		"	CP - Q_{7b}	"	"	"
	t_{PHL2}		127	IN		OUT	5.0 V	5.0 V	5.0 V	"	"	IN	GND						"	$\overline{MR}$ - Q_{7a}	"	72	"
	t_{PHL2}		128	IN						"	"	IN	"	5.0 V	5.0 V	5.0 V	OUT		"	$\overline{MR}$ - Q_{7b}	"	72	"
	t_{setup}		129 6/	5.0 V		C	IN			IN	"	GND	"						"	D_S - CP_a	25		"
	t_{hold}		130 6/	5.0 V		C	IN			IN	"	GND	"						"	D_S - CP_a	2		"
11	Same tests, terminal conditions, and limits as for subgroup 10, except T_C = -55°C.																						

1/ A = 8 negative going clock pulses, V_{IH} = 3.0 V, V_{IL} = 0 V, t_{THL} = t_{TLH} = 5 ns, t_p = 100 µs minimum, except for subgroups 7 and 8 (see 3/).
2/ B = Negative going clock pulse.
3/ Inputs: A = 2.4 V
B = 0.4 V
4/ The tests in subgroups 7 and 8 shall be performed in the sequence specified.
5/ Outputs: H ≥ 1.5 V
L ≤ 1.5 V
6/ $\overline{Q}_7$ is connected to D_1.
7/ C = Q_7 output after 8 clock pulses.

4.4.1 Group A inspection. Group A inspection shall be in accordance with table I of method 5005 of MIL-STD-883 and as follows:

a. Electrical test requirements shall be as specified in table II herein.

b. Subgroups 4, 5, and 6 of table I of method 5005 of MIL-STD-883 shall be omitted.

4.4.2 Group B inspection. Group B inspection shall be in accordance with table II of method 5005 of MIL-STD-883. Electrical parameters shall be as specified in table II herein.

4.4.3 Group C inspection. Group C inspection shall be in accordance with table III of method 5005 of MIL-STD-883 and as follows:

a. End-point electrical parameters shall be as specified in table II herein.

b. Steady-state life test (method 1005 of MIL-STD-883) conditions:

(1) Test condition D, E, or F using the circuit shown on figure 4, or equivalent.

(2) T_A = +125°C minimum.

(3) Test duration: 1,000 hours, except as permitted by method 1005 of MIL-STD-883.

4.4.4 Group D inspection. Group D inspection shall be in accordance with table IV of method 5005 of MIL-STD-883. End-point electrical tests shall be as specified in table II herein.

4.5 Methods of inspection. Methods of inspection shall be specified as follows:

4.5.1 Voltage and current. All voltages given are referenced to the microcircuit ground terminal. Currents given are conventional and positive when flowing into the referenced terminal.

5. PACKAGING

5.1 Packaging requirements. The requirements for packaging shall be in accordance with MIL-M-38510.

6. NOTES

6.1 Intended use. Microcircuits conforming to this specification are intended for logisitic support of existing equipment.

6.2 Ordering data. The acquisition document should specify the following:

a. Complete part number (see 1.2).

b. Requirements for delivery of one copy of the quality conformance inspection data pertinent to the device inspection lot to be supplied with each shipment by the device manufacturer, if applicable.

c. Requirements for certificate of compliance, if applicable.

d. Requirements for notification of change of product or process to the contracting activity, if applicable.

e. Requirements for packaging and packing.

f. Requirements for special carriers, lead lengths, or lead forming, if applicable. These requirements shall not affect the part number. Unless otherwise specified, these requirements shall not apply to direct purchase by or direct shipment to the Government.

6.3 Abbreviations, symbols, and definitions. The abbreviations, symbols, and definitions used herein are defined in MIL-M-38510, MIL-STD-1331, and as follows:

GND - - - - - - - - - - - - - - Ground zero voltage potential.
I_{IN} - - - - - - - - - - - - - - Current flowing into an input terminal.
V_{IN} - - - - - - - - - - - - - - Voltage level at an input terminal.
V_{IC} - - - - - - - - - - - - - - Input clamp voltage.

6.4 Logistic support. Lead materials and finishes (see 3.3) are interchangeable. Unless otherwise specified, microcircuits acquired for Government logistic support will be acquired to device class B (see 1.2.2), lead material and finish C (see 3.3). Longer lead lengths and lead forming shall not affect the part number.

6.5 Generic test data. Generic test data may be used to satisfy the requirements of 4.4.3. Group C generic test data shall be on date codes no more than one year old and on a die in the same microcircuit group (see appendix E of MIL-M-38510) with the same material, design and process and from the same plant as the die represented. Group D (see 4.4.4) generic data shall be on date codes no more than one year old and on the same package type (see terms, definitions, and symbols of MIL-M-38510) and from the same plant as the package represented. The vendor is required to retain the generic data for a period of not less than 36 months from the date of shipment.

6.6 Substitutability. The cross-reference information below is presented for the convenience of users. Microcircuits covered by this specification will functionally replace the listed generic-industry type. Generic-industry microcircuit types may not have equivalent operational performance characteristics across military temperature ranges or reliability factors equivalent to MIL-M-38510 device types and may have slight physical variations in relation to case size. The presence of this information shall not be deemed as permitting substitution of generic-industry types for MIL-M-38510 types or as a waiver of any of the provisions of MIL-M-38510.

Military device type	Generic-industry type
01	9300
02	9328

6.7 Ordering guidance. Since the qualification and certification requirements have been removed from the specification, orders may be placed immediately.

6.8 Changes from previous issue. Asterisks are not used in this revision to identify changes with respect to the previous issue, due to the extensiveness of the changes.

Custodians:
Army - ER
Navy - EC
Air Force - 17

Review activities:
Army - AR, MI
Navy - OS, SH, TD
Air Force - 11, 19, 85, 99
DLA - ES

User activities:
Army - SM
Navy - AS, CG, MC

Preparing activity:
Air Force - 17

Agent:
DLA - ES

(Project 5962-0959)