QUALIFICATION REQUIREMENTS REMOVED

MIL-M-38510/160A
9 August 1983
SUPERSEDING
MIL-M-38510/160(USAF)
27 February 1976

MILITARY SPECIFICATION

MICROCIRCUITS, DIGITAL, TTL, ADDRESSABLE LATCHES, MONOLITHIC SILICON

INACTIVE FOR NEW DESIGN AFTER DATE OF THIS REVISION

This specification is approved for use by all Departments and Agencies of the Department of Defense.

1. SCOPE

1.1 Scope. This specification covers the detail requirements for monolithic silicon, TTL, addressable latch microcircuits. One product assurance class and a choice of case outlines and lead finishes are provided and are reflected in the complete part number.

1.2 Part number. The complete part number shall be in accordance with MIL-M-38510, except the "JAN" or "J" certification shall not be used.

1.2.1 Device type. The device type shall be as follows:

Device type	Circuit
01	8-bit addressable latch

1.2.2 Device class. The device class shall be the product assurance level as defined in MIL-M-38510.

1.2.3 Case outline. The case outline shall be designated as follows:

Outline letter	Case outline (see MIL-M-38510, appendix C)
E	D-2 (16-lead, 1/4" x 7/8"), dual-in-line package
F	F-5 (16-lead, 1/4" x 3/8"), flat package

1.3 Absolute maximum ratings.

Supply voltage range	-0.5 V dc to +7.0 V dc
Input voltage range	-1.5 V dc at -12 mA to +5.5 V dc
Storage temperature range	-65°C to +150°C
Maximum power dissipation, (P_D) 1/	473 mW dc
Lead temperature (soldering, 10 seconds)	+300°C
Thermal resistance, junction-to-case (θ_{JC}):	
Case E	0.08°C/mW
Case F	0.09°C/mW
Junction temperature (T_J)	+175°C

1/ Must withstand the added P_D due to short circuit test (e.g., I_{OS}).

Beneficial comments (recommendations, additions, deletions) and any pertinent data which may be of use in improving this document should be addressed to: Rome Air Development Center (RBE-2), Griffiss AFB, NY 13441, by using the self-addressed Standardization Document Improvement Proposal (DD Form 1426) appearing at the end of this document or by letter.

FSC 5962

1.4 Recommended operating conditions.

Supply voltage range (V_{CC})- - - - - - -	+4.5 V dc minimum to +5.5 V dc maximum
Minimum high-level input voltage (V_{IH})-	+2.0 V dc
Maximum low-level input voltage (V_{IL}) -	+0.8 V dc
Case operating temperature range (T_C) -	-55°C to +125°C

2. APPLICABLE DOCUMENTS

2.1 Government specifications and standards. Unless otherwise specified, the following specifications and standards, of the issue listed in that issue of the Department of Defense Index of Specifications and Standards specified in the solicitation, form a part of this specification to the extent specified herein.

SPECIFICATION

MILITARY

MIL-M-38510 - Microcircuits, General Specification for.

STANDARD

MILITARY

MIL-STD-883 - Test Methods and Procedures for Microelectronics.

(Copies of specifications, standards, handbooks, drawings, and publications required by manufacturers in connection with specific acquisition functions should be obtained from the contracting activity or as directed by the contracting officer.)

2.2 Order of precedence. In the event of a conflict between the text of this specification and the references cited herein, the text of this specification shall take precedence.

3. REQUIREMENTS

3.1 Detail specification. The individual item requirements shall be in accordance with MIL-M-38510, and as specified herein.

3.2 Design, construction, and physical dimensions. The design, construction, and physical dimensions shall be as specified in MIL-M-38510 and herein.

3.2.1 Case outlines. The case outlines shall be as specified in MIL-M-38510, and in 1.2.3 herein.

3.2.2 Terminal connections. The terminal connections shall be as specified on figure 1.

3.2.3 Truth tables. The truth tables shall be as specified on figue 2.

3.2.4 Logic diagram. The logic diagram shall be as specified on figure 3.

3.3 Lead material and finish. The lead material and finish shall be in accordance with MIL-M-38510 (see 6.5).

3.4 Electrical performance characteristics. The electrical performance characteristics are as specified in table I, and apply over the full recommended case operating temperature range, unless otherwise specified.

3.5 Electrical test requirements. The electrical test requirements shall be the subgroups specified in table II. The electrical tests for each subgroup are described in table III.

3.6 Marking. Marking shall be in accordance with MIL-M-38510 and 1.2 herein. At the option of the manufacturer, marking of the country of origin may be omitted from the body of the microcircuit, but shall be retained on the initial container. The "JAN" or "J" certification mark shall not be used.

TABLE I. Electrical performance characteristics.

Test	Symbol	Conditions	Limits Min	Limits Max	Unit
High-level output voltage	V_{OH}	V_{CC} = 4.5 Vdc; I_{OH} = -720 μA	2.4		Volts
Low-level output voltage	V_{OL}	V_{CC} = 4.5 V; I_{OL} = 9.6 mA		0.4	Volts
Input clamp voltage	V_{IC}	V_{CC} = 4.5 V; I_{IN} = -12 mA		-1.5	Volts
Low-level input current all inputs except $\overline{E}$	I_{IL1}	V_{CC} = 5.5 V; V_{IN} = 0.4 V	-0.7	-1.6	mA
Low-level input current, $\overline{E}$	I_{IL2}	V_{CC} = 5.5 V; V_{IN} = 0.4 V	-1.05	-2.4	mA
High-level input current, all inputs except $\overline{E}$	I_{IH1}	V_{CC} = 5.5 V; V_{IN} = 2.4 V		40	μA
High-level input current, $\overline{E}$	I_{IH2}	V_{CC} = 5.5 V; V_{IN} = 2.4 V		60	μA
High-level input current, all inputs except $\overline{E}$	I_{IH3}	V_{CC} = 5.5 V; V_{IN} = 5.5 V		100	μA
High-level input current, $\overline{E}$	I_{IH4}	V_{CC} = 5.5 V; V_{IN} = 5.5 V		150	μA
Short-circuit output current	I_{OS}	V_{CC} = 5.5 V 1/	-30	-100	mA
Supply current	I_{CC}	V_{CC} = 5.5 V		86	mA
To high level, from address to output	t_{PLH1}	C_L = 50 pF; R_L = 530 ohms	10	50	ns
To low level, from address to output	t_{PHL1}		10	47	ns
To low level, from clear to output	t_{PHL2}		10	55	ns
To low level, from data to output	t_{PHL3}		6	40	ns
To high level, from data to output	t_{PLH3}		6	56	ns
To low level, from enable to output	t_{PHL4}		6	35	ns
To high level from enable to output	t_{PLH4}		6	39	ns

1/ All unspecified inputs grounded.

3.7 Manufacturer eligibility. To be eligible to supply microcircuits to this specification, a manufacturer shall have a manufacturer certification in accordance with MIL-M-38510 for at least one line, not necessarily the line producing the device type described herein.

3.8 Certification. Certification in accordance with MIL-M-38510 is not required for this device.

TABLE II. Electrical test requirements.

MIL-STD-883 test requirements	Subgroups (see table III) Class B devices
Interim electrical parameters (pre burn-in) (method 5004)	1
Final electrical test parameters (method 5004)	1*,2,3,7,9
Group A test requirements (method 5005)	1,2,3,7,9,10,11
Groups C and D end-point electrical parameters (method 5005)	1,2,3
Additional electrical subgroups for group C periodic inspections	None

*PDA applies to subgroup 1 (see 4.2c).

4. QUALITY ASSURANCE PROVISIONS

4.1 Sampling and inspection. Sampling and inspection procedures shall be in accordance with MIL-M-38510 and methods 5005 and 5007, as applicable, of MIL-STD-883, except as modified herein.

4.2 Screening. Screening shall be in accordance with method 5004 of MIL-STD-883, and shall be conducted on all devices prior to quality conformance inspection. The following additional criteria shall apply:

a. Burn-in test (method 1015 of MIL-STD-883).

(1) Test condition D or E, using the circuit shown on figure 4, or equivalent.

(2) T_A = +125°C minimum.

b. Interim and final electrical test parameters shall be as specified in table II, except interim electrical parameters test prior to burn-in is optional at the discretion of the manufacturer.

c. The percent defective allowable (PDA) for class B devices shall be 10 percent based on failures from group A, subgroup 1 test after cooldown as final electrical test in accordance with method 5004 of MIL-STD-883, and with no intervening electrical measurements. If interim electrical parameter tests are performed prior to burn-in, failures resulting from pre burn-in screening may be excluded from the PDA. If interim electrical parameter tests prior to burn-in are omitted, then all screening failures shall be included in the PDA. The verified failures of group A, subgroup 1, after burn-in divided by the total number of devices submitted for burn-in in that lot shall be used to determine the percent defective for that lot, and the lot shall be accepted or rejected based on the PDA for the applicable device class.

4.3 Qualification inspection. Qualification inspection is not required.

4.4 Quality conformance inspection. Quality conformance inspection shall be in accordance with MIL-M-38510, and as specified herein. Inspections to be performed shall be those specified in method 5005 of MIL-STD-883 and herein for groups A, B, C, and D inspections (see 4.4.1 through 4.4.4). Generic test data (see 6.6) may be used to satisfy the requirements for groups C and D inspections. Quality conformance inspection shall be completed on the specific devices covered by this specification before they are shipped.

4.4.1 Group A inspection. Group A inspection shall be in accordance with table I of method 5005 of MIL-STD-883 and as follows:

a. Tests shall be as specified in table II herein.

b. Subgroups 4, 5, 6, and 8 of table I of method 5005 of MIL-STD-883 shall be omitted.

4.4.2 Group B inspection. Group B inspection shall be in accordance with table II of method 5005 of MIL-STD-883. Electrical paramters shall be as specified in table II herein.

4.4.3 Group C inspection. Group C inspection shall be in accordance with table III of method 5005 of MIL-STD-883 and as follows:

a. End-point electrical test parameters shall be as specified in table II herein.

b. Steady-state life test (method 1005 of MIL-STD-883) conditions:

(1) Test condition D or E, using the circuit shown on figure 4, or equivalent.

(2) T_A = +125°C minimum.

(3) Test duration: 1,000 hours, except as permitted by appendix B of MIL-M-38510.

4.4.4 Group D inspection. Group D inspection shall be in accordance with table IV of method 5005 of MIL-STD-883. End-point electrical parameters shall be as specified in table II herein.

4.5 Methods of inspection. Methods of inspection shall be specified as follows.

4.5.1 Voltage and current. All voltages given are referenced to the microcircuit ground terminal. Currents given are conventional and positive when flowing into the referenced terminal.

5. PACKAGING

5.1 Packaging requirements. The requirements for packaging of microcircuits shall be in accordance with MIL-M-38510.

6. NOTES

6.1 Notes. The notes specified in MIL-M-38510 are applicable to this specification.

6.2 Intended use. Microcircuits conforming to this specification are intended for logistic support of existing equipment.

Device type 01

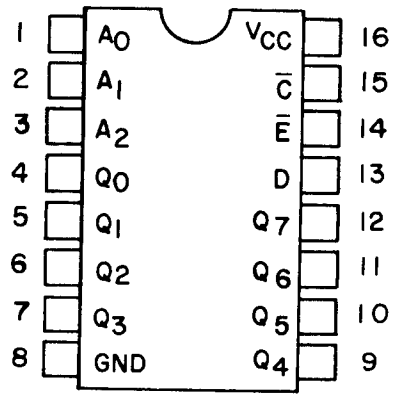

FIGURE 1. Terminal connections.

MODE SELECTION

$\bar{E}$	$\bar{C}$	MODE
L	H	Addressable latch
H	H	Memory
L	L	Active HIGH eight-channel demultiplexer
H	L	Clear

Device type 01

TRUTH TABLE — PRESENT OUTPUT STATES

$\bar{C}$	$\bar{E}$	D	A_0	A_1	A_2	Q_0	Q_1	Q_2	Q_3	Q_4	Q_5	Q_6	Q_7	MODE
L	H	X	X	X	X	L	L	L	L	L	L	L	L	CLEAR
L	L	L	L	L	L	L	L	L	L	L	L	L	L	DEMULTIPLEX
L	L	H	L	L	L	H	L	L	L	L	L	L	L	
L	L	L	H	L	L	L	L	L	L	L	L	L	L	
L	L	H	H	L	L	L	H	L	L	L	L	L	L	
.	.	.		.					.					
.	.	.		.					.					
.	.	.		.					.					
L	L	H	H	H	H	L	L	L	L	L	L	L	H	
H	H	X	X	X	X	Q_{N-1} →								MEMORY
H	L	L	L	L	L	L	Q_{N-1}	Q_{N-1}	Q_{N-1} →					ADDRESSABLE
H	L	H	L	L	L	H	Q_{N-1}	Q_{N-1} →						LATCH
H	L	L	H	L	L	Q_{N-1}	L	Q_{N-1} →						
H	L	H	H	L	L	Q_{N-1}	H	Q_{N-1} →						
.	.	.		.				.						
.	.	.		.				.						
.	.	.		.				.						
H	L	L	H	H	H	Q_{N-1} →						Q_{N-1}	L	
H	L	H	H	H	H	Q_{N-1} →						Q_{N-1}	H	

X = Don't care condition
L = LOW voltage level
H = HIGH voltage level
Q_{N-1} = Previous output state

FIGURE 2. Truth table.

Device type 01

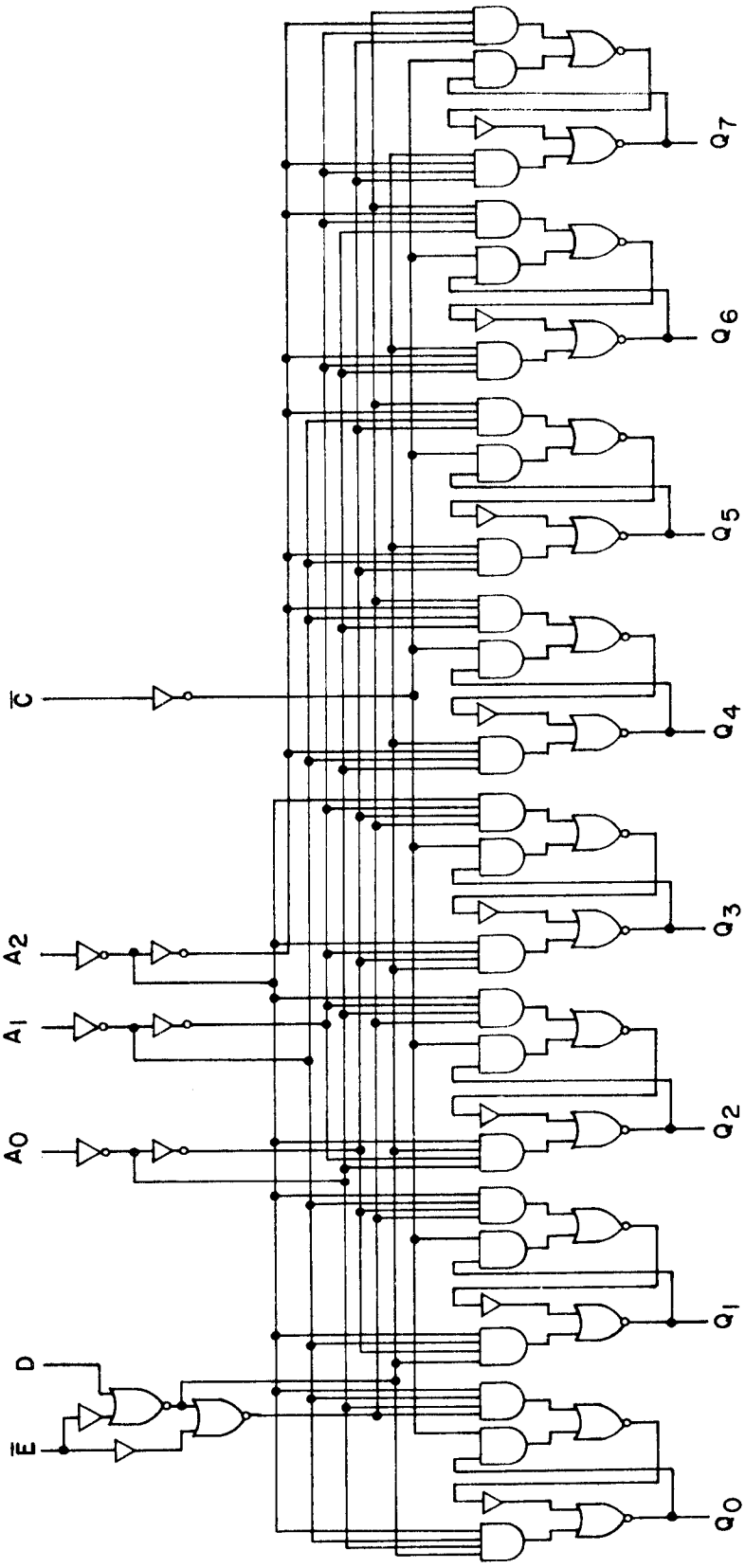

FIGURE 3. Logic diagram.

Device type 01

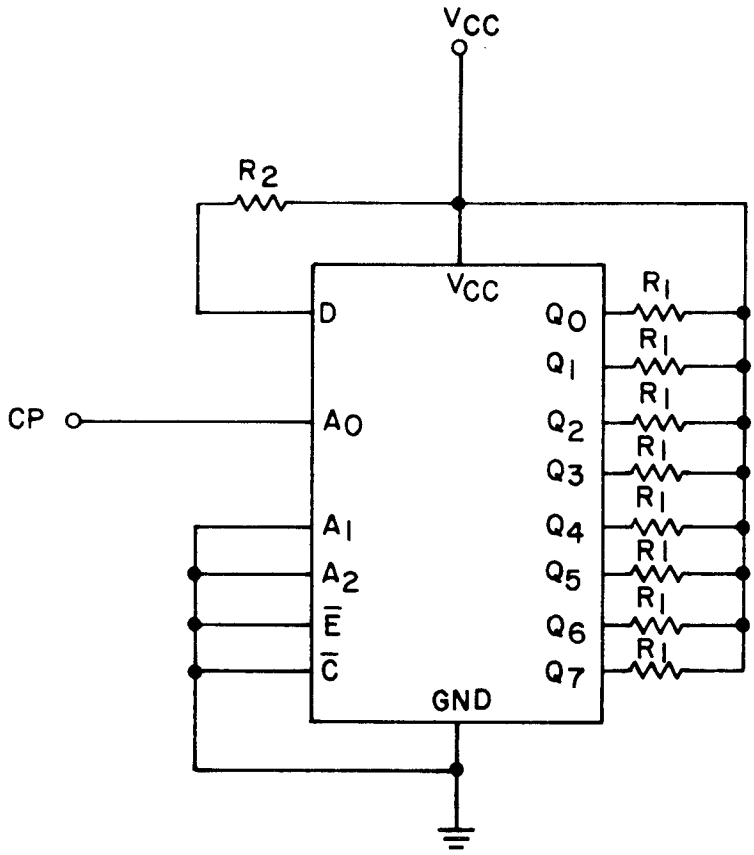

NOTES:
1. V_{CC} = 5.5 V.
2. R_1 = 560Ω ±5%; R_2 = 4 kΩ ±5%.
3. CP = 1 MHz ±50% square wave; duty cycle = 50 ±15%; V_{IH} = 2.0 V to 5.5 V; V_{IL} = -0.5 V to 0.8 V.

FIGURE 4. Burn-in and life test circuit.

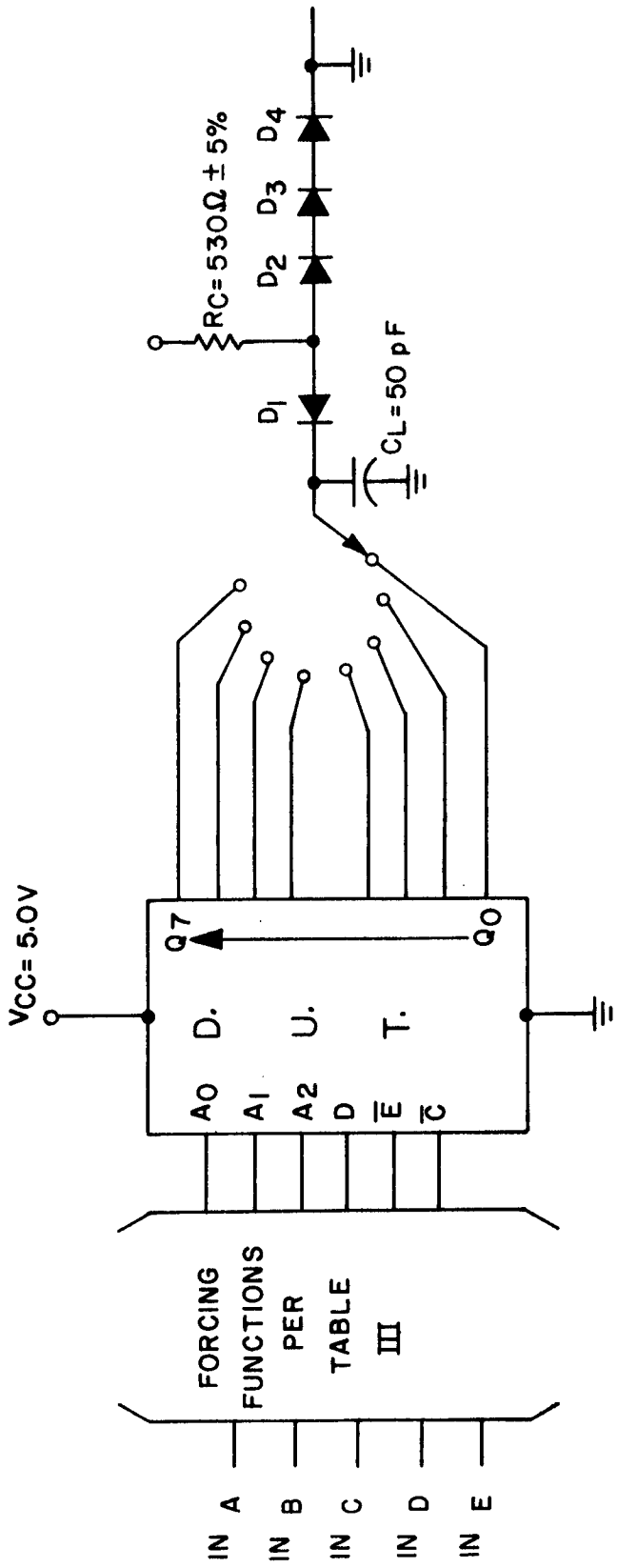

NOTE: All diodes are 1N3064 or equivalent.

FIGURE 5. Switching waveforms for device type 01.

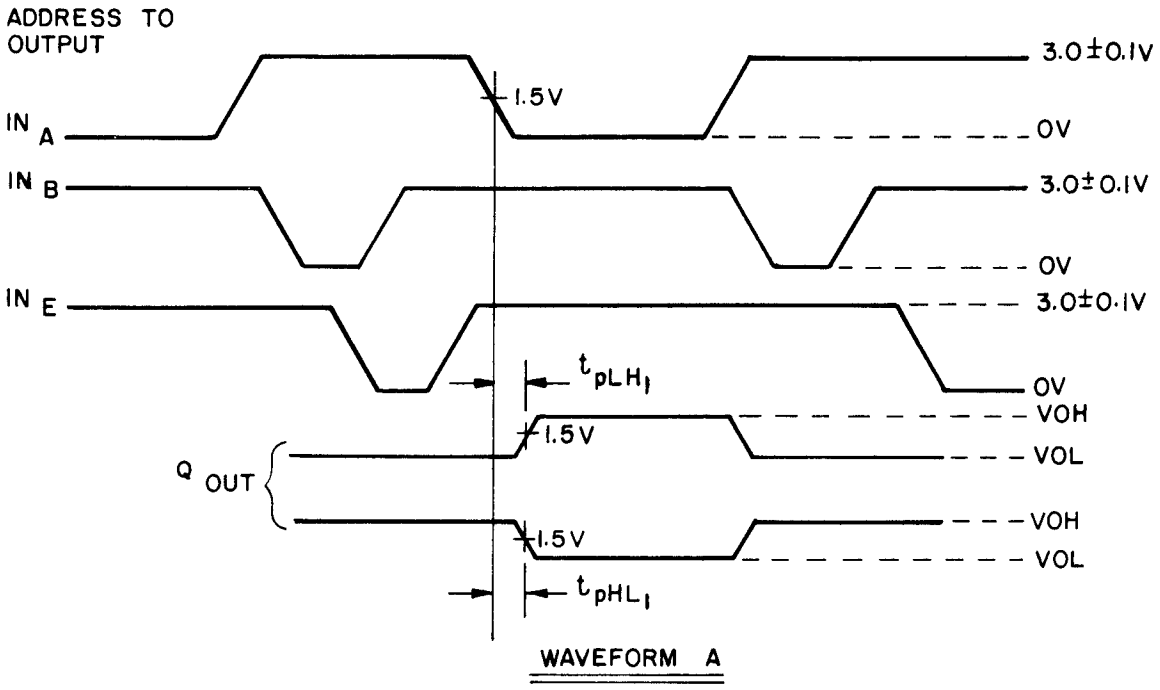

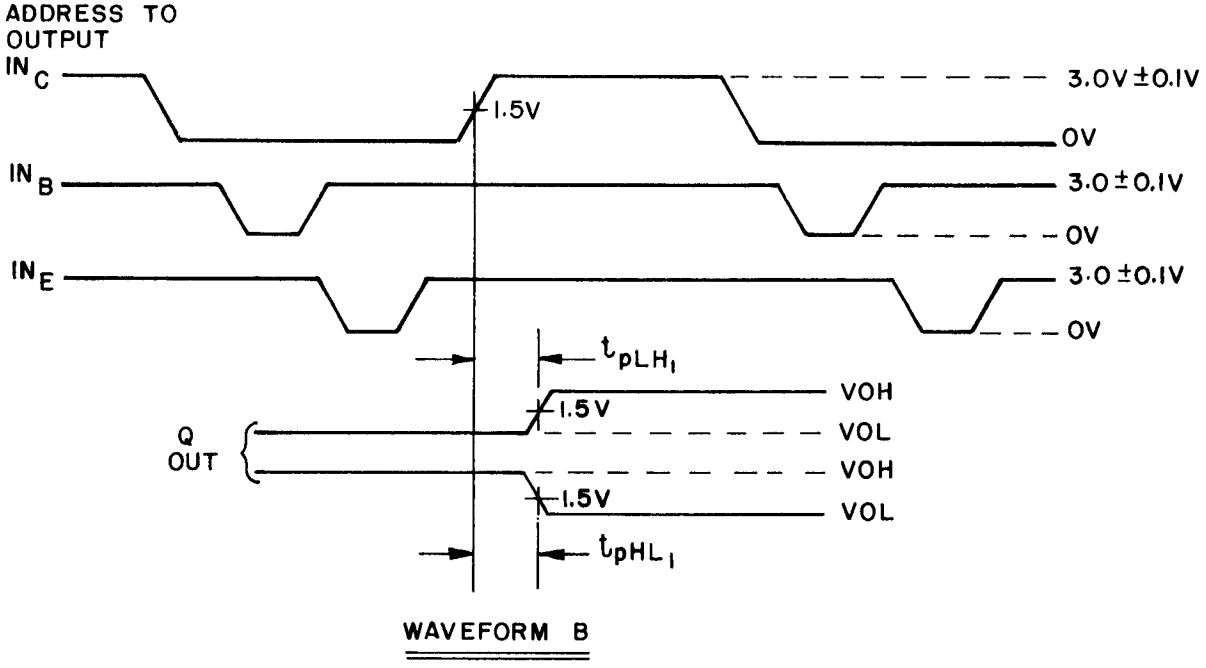

FIGURE 5. Switching waveforms for device type 01 - Continued.

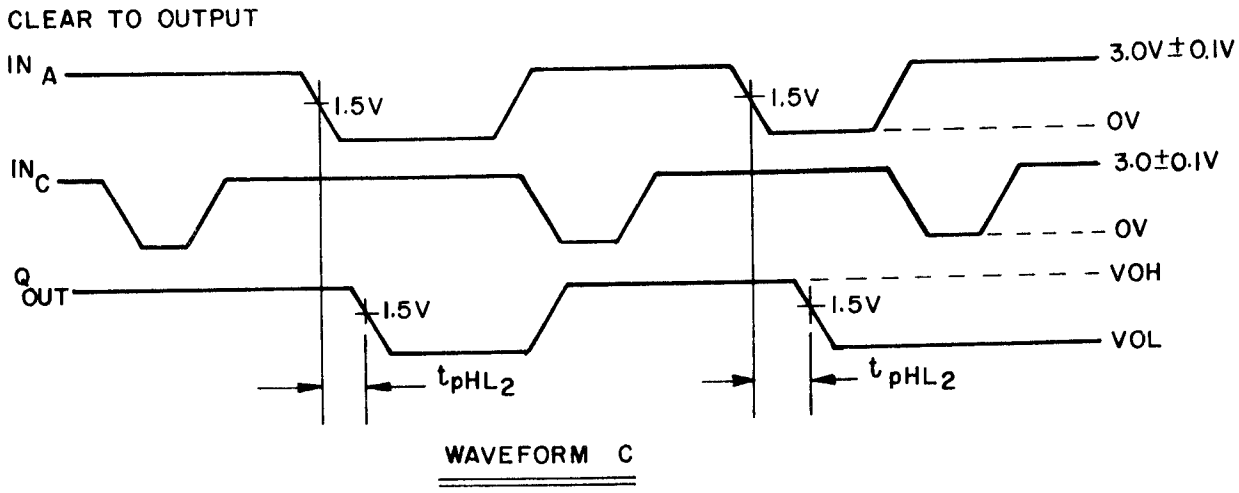

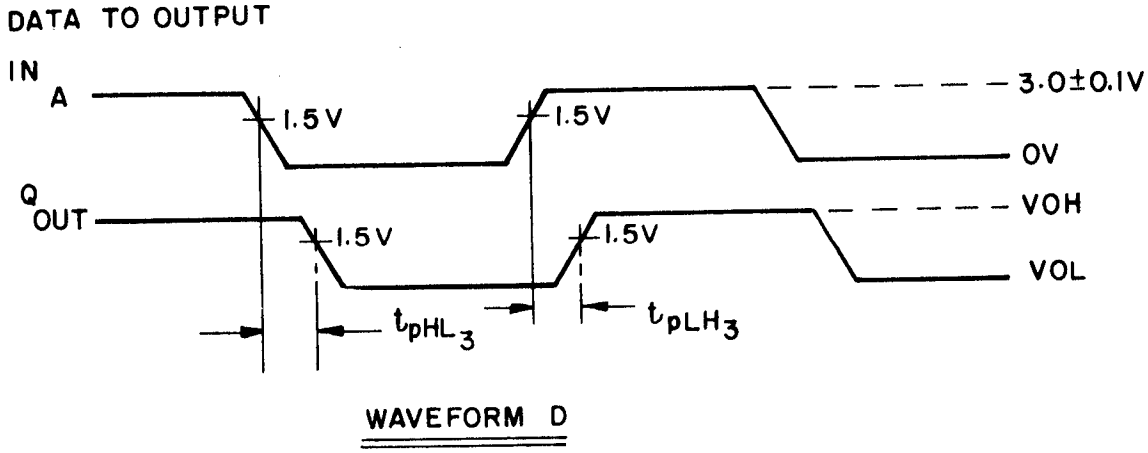

FIGURE 5. Switching waveforms for device type 01 - Continued.

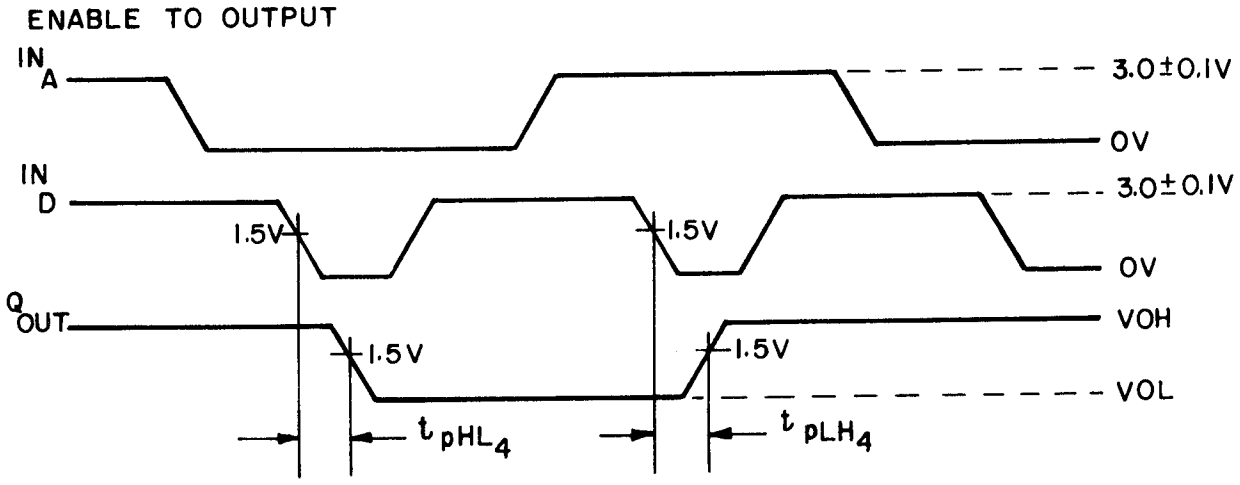

WAVEFORM E

NOTES:
1. $1N_A$ and $1N_C$ have the following characteristics: V_{gen} = 3.0 ±0.1 V, pulse width = 500 ns, PRR = 1 MHz, rise time = 2 ns (1 V to 2 V), fall time = 2 ns (2 V to 1 V).
2. $1N_B$ and $1N_E$ have the following characteristics: V_{gen} = 3.0 ±0.1 V; pulse width = 200 ns, PRR = 500 kHz, rise time = 2 ns (1 V to 2 V), fall time = 2 ns (2 V to 1 V).
3. $1N_D$ has the following characteristics: V_{gen} = 3.0 ±0.1 V, pulse width = 200 ns, PRR = 1 MHz, rise time = 2 ns (1 V to 2 V), fall time = 2 ns (2 V to 1 V).

FIGURE [illegible]. Switching waveforms for device type 01 - Continued.

TABLE III. Group A inspection for device type 01. 1/

Subgroup	Symbol	MIL-STD-883 method	Cases E, F	1	2	3	4	5	6	7	8	9	10	11	12	13	14	15	16	Meas. terminal	Test limits		
			Test No.	A_0	A_1	A_2	Q_0	Q_1	Q_2	Q_3	GND	Q_4	Q_5	Q_6	Q_7	D	$\overline{E}$	$\overline{C}$	V_{CC}		Min	Max	Unit
1 $T_C = +25°C$	V_{OL}	3007	1				9.6 mA				GND						4.5 V	GND	4.5 V	Q_0		0.4	V
			2					9.6 mA												Q_1			
			3						9.6 mA											Q_2			
			4							9.6 mA										Q_3			
			5									9.6 mA								Q_4			
			6										9.6 mA							Q_5			
			7											9.6 mA						Q_6			
			8												9.6 mA					Q_7			
	V_{OH}	3006	9	GND	GND	4.5 V	-720 μA									GND	GND	4.5 V		Q_0	2.4		
			10	4.5 V	GND			-720 μA												Q_1			
			11	GND	4.5 V				-720 μA											Q_2			
			12	4.5 V	4.5 V					-720 μA										Q_3			
			13	GND	GND							-720 μA				4.5 V				Q_4			
			14	4.5 V	GND								-720 μA							Q_5			
			15	GND	4.5 V									-720 μA						Q_6			
			16	4.5 V	4.5 V										-720 μA					Q_7			
	I_{IL1}	3009	17	0.4 V															5.5 V	A_0	-0.7	-1.6	mA
			18		0.4 V															A_1			
			19			0.4 V														A_2			
			20													0.4 V				D			
			21															0.4 V		$\overline{C}$			
	I_{IL2}		22														0.4 V			$\overline{E}$	-1.05	-2.4	
	I_{IH1}	3010	23	2.4 V																A_0		40	μA
			24		2.4 V															A_1			
			25			2.4 V														A_2			
			26													2.4 V				D			
			27															2.4 V		$\overline{C}$			
	I_{IH2}		28														2.4 V			$\overline{E}$		60	
	I_{IH3}		29	5.5 V																A_0		100	
			30		5.5 V															A_1			
			31			5.5 V														A_2			
			32													5.5 V				D			
			33															5.5 V		$\overline{C}$			
	I_{IH4}		34														5.5 V			$\overline{E}$		150	
	I_{OS}	3011	35	GND	GND	GND	GND	GND								4.5 V	GND	GND		Q_0	-30	-100	mA
			36	4.5 V	GND				GND											Q_1			
			37	GND	4.5 V															Q_2			
			38	4.5 V	4.5 V	GND				GND										Q_3			
			39	GND	GND	4.5 V						GND								Q_4			

See footnotes at end of table.

TABLE III. Group A inspection for device type 01. 1/ -Continued

Subgroup	Symbol	MIL-STD-883 method	Cases E, F Test No.	1 A_0	2 A_1	3 A_2	4 Q_0	5 Q_1	6 Q_2	7 Q_3	8 GND	9 Q_4	10 Q_5	11 Q_6	12 Q_7	13 D	14 $\overline{E}$	15 $\overline{C}$	16 V_{CC}	Meas. terminal	Test limits Min	Test limits Max	Test limits Unit
1 $T_C = +25°C$	I_{OS}	3011	40	4.5 V	GND	4.5 V					GND		GND			4.5 V	GND	GND	5.5 V	Q_5	-30	-100	mA
			41	GND	4.5 V	4.5 V								GND						Q_6			
			42	4.5 V	4.5 V	4.5 V									GND					Q_7			
	I_{CC}	3005	43	GND	GND	GND										GND	GND	GND		V_{CC}		86	
	V_{IC}		44	-12 mA																A_0		-1.5	V
			45		-12 mA															A_1			
			46			-12 mA														A_2			
			47													-12 mA				D			
			48														-12 mA			$\overline{E}$			
			49															-12 mA		$\overline{C}$			
2	Same tests, terminal conditions and limits as for subgroup 1, except $T_C = +125°C$ and V_{IC} tests are omitted.																						
3	Same tests, terminal conditions and limits as for subgroup 1, except $T_C = -55°C$ and V_{IC} tests are omitted.																						
7 $T_C = +25°C$	Functional Tests	3014	50	L 2/	L	L	L	L	L	L	GND	L	L	L	L	L	H	L	4.5 V	H or L as shown 3/			
			51	H 2/	L																		
			52		H																		
			53		H	H																	
			54		L																		
			55	L	L																		
			56		H																		
			57			L																	
			58														L						
			59						H							H							
			60			H			L					H		H							
			61											L		L							
			62		L											L							
			63									H				H							
			64	H								L	H			H							
			65										L			L							
			66		H								L			L							
			67												H	H							
			68			L				H					L	H							
			69							L						L							
			70		L											L							
			71					H								H							
			72	L			H	L								H							
			73				L									L							
			74														H						
			75														H	H					
			76														L						
			77				H									H							
			78	H				H															
			79		H					H													
			80		H	H				H					H								

See footnotes at end of table.

TABLE III. Group A inspection for device type 01.[1/] -Continued

Subgroup	Symbol	MIL-STD-883 method	Cases E, F	1	2	3	4	5	6	7	8	9	10	11	12	13	14	15	16	Meas. terminal	Test limits		
			Test No.	A_0	A_1	A_2	Q_0	Q_1	Q_2	Q_3	GND	Q_4	Q_5	Q_6	Q_7	D	$\overline{E}$	$\overline{C}$	V_{CC}		Min	Max	Unit
7	Func-	3014	81	H	L	H	H	H	L	H	GND	L	H	L	H	H	L	H	4.5 V	H or L			
$T_C=+25°C$	tional		82	L	L	H	H	H	L			H		L						as shown 3/			
	Tests		83		H	H			L					H									
			84			L			H														
			85														H						
			86													L							
			87			H																	
			88			L																	
			89			H																	
			90	H		H																	
			91			L																	
			92		L																		
			93	L																			
			94	L			L										L						
			95	H				L															
			96		H					L													
			97		H	H									L								
			98		L								L										
			99	L	L							L											
			100		H							L		L									
			101			L			L														
			102			L											H						
			103			H																	
			104		L																		
			105	H	L																		
			106	H	H																		
			107	H	H	L																	
			108	H	L																		
			109	L	L																		
9	t_{PLH1}	3003	110	IN-A	GND	GND	OUT				GND					5.0 V	IN-E	IN-B	5.0 V	A_0 - Q_0	10	40	ns
$T_C=+25°C$		(Fig. 5)	111	GND	IN-A	GND	OUT													A_1 - Q_0			
			112	GND	GND	IN-A	OUT													A_2 - Q_0			
			113	IN-C	GND	GND		OUT												A_0 - Q_1			
			114	5.0 V	IN-A	GND		OUT												A_1 - Q_1			
			115	5.0 V	GND	IN-A		OUT												A_2 - Q_1			
			116	IN-A	5.0 V	GND			OUT											A_0 - Q_2			
			117	GND	IN-C	GND			OUT											A_1 - Q_2			
			118	GND	5.0 V	IN-A			OUT											A_2 - Q_2			
			119	IN-C	5.0 V	GND				OUT										A_0 - Q_3			
			120	5.0 V	IN-C	GND				OUT										A_1 - Q_3			
			121	5.0 V	5.0 V	IN-A				OUT										A_2 - Q_3			
			122	IN-A	GND	5.0 V						OUT								A_0 - Q_4			
			123	GND	IN-A	5.0 V						OUT								A_1 - Q_4			
			124	GND	GND	IN-C						OUT								A_2 - Q_4			
			125	IN-C	GND	5.0 V							OUT							A_0 - Q_5			
			126	5.0 V	IN-A	5.0 V							OUT							A_1 - Q_5			

See footnotes at end of table.

TABLE III. Group A inspection for device type 01.[1/] -Continued

Subgroup	Symbol	MIL-STD-883 method	Cases E, F Test No.	1 A_0	2 A_1	3 A_2	4 Q_0	5 Q_1	6 Q_2	7 Q_3	8 GND	9 Q_4	10 Q_5	11 Q_6	12 Q_7	13 D	14 $\overline{E}$	15 $\overline{C}$	16 V_{CC}	Meas. terminal	Test limits Min	Max	Unit
9	t_{PLH1}	3003	127	5.0 V	GND	IN-C					GND		OUT			5.0 V	IN-E	IN-B	5.0 V	A_2 - Q_5	10	40	ns
T_C=+25°C		(Fig. 5)	128	IN-A	5.0 V	5.0 V								OUT						A_0 - Q_6			
			129	GND	IN-C	5.0 V								OUT						A_1 - Q_6			
			130	GND	5.0 V	IN-C								OUT						A_2 - Q_6			
			131	IN-C	5.0 V	5.0 V									OUT					A_0 - Q_7			
			132	5.0 V	IN-C	5.0 V									OUT					A_1 - Q_7			
			133	5.0 V	5.0 V	IN-C									OUT					A_2 - Q_7			
	t_{PLH3}		134	GND	GND	GND	OUT									IN-A	GND	5.0 V		D - Q_0	6	39	
			135	5.0 V	GND			OUT												D - Q_1			
			136	GND	5.0 V				OUT											D - Q_2			
			137	5.0 V	5.0 V					OUT										D - Q_3			
			138	GND	GND	5.0 V						OUT								D - Q_4			
			139	5.0 V	GND								OUT							D - Q_5			
			140	GND	5.0 V									OUT						D - Q_6			
			141	5.0 V	5.0 V										OUT					D - Q_7			
	t_{PLH4}		142	GND	GND	GND	OUT										IN-C			$\overline{E}$ - Q_0		32	
			143	5.0 V	GND			OUT												$\overline{E}$ - Q_1			
			144	GND	5.0 V				OUT											$\overline{E}$ - Q_2			
			145	5.0 V	5.0 V					OUT										$\overline{E}$ - Q_3			
			146	GND	GND	5.0 V						OUT								$\overline{E}$ - Q_4			
			147	5.0 V	GND								OUT							$\overline{E}$ - Q_5			
			148	GND	5.0 V									OUT						$\overline{E}$ - Q_6			
			149	5.0 V	5.0 V										OUT					$\overline{E}$ - Q_7			
	t_{PHL1}		150	IN-A	GND	GND	OUT									5.0 V	IN-E	IN-B		A_0 - Q_0	10	38	
			151	GND	IN-A	GND	OUT													A_1 - Q_0			
			152	GND	GND	IN-A	OUT													A_2 - Q_0			
			153	IN-C	GND	GND		OUT												A_0 - Q_1			
			154	5.0 V	IN-A	GND		OUT												A_1 - Q_1			
			155	5.0 V	GND	IN-A		OUT												A_2 - Q_1			
			156	IN-A	5.0 V	GND			OUT											A_0 - Q_2			
			157	GND	IN-C	GND			OUT											A_1 - Q_2			
			158	GND	5.0 V	IN-A			OUT											A_2 - Q_2			
			159	IN-C	5.0 V	GND				OUT										A_0 - Q_3			
			160	5.0 V	IN-C	GND				OUT										A_1 - Q_3			
			161	5.0 V	5.0 V	IN-A				OUT										A_2 - Q_3			
			162	IN-A	GND	5.0 V						OUT								A_0 - Q_4			
			163	GND	IN-A	5.0 V						OUT								A_1 - Q_4			
			164	GND	GND	IN-C						OUT								A_2 - Q_4			
			165	IN-C	GND	5.0 V							OUT							A_0 - Q_5			
			166	5.0 V	IN-A	5.0 V							OUT							A_1 - Q_5			
			167	5.0 V	GND	IN-C							OUT							A_2 - Q_5			
			168	IN-A	5.0 V	5.0 V								OUT						A_0 - Q_6			
			169	GND	IN-C	5.0 V								OUT						A_1 - Q_6			
			170	GND	5.0 V	IN-C								OUT						A_2 - Q_6			
			171	IN-C	5.0 V	5.0 V									OUT					A_0 - Q_7			
			172	5.0 V	IN-C	5.0 V									OUT					A_1 - Q_7			
			173	5.0 V	5.0 V	IN-C									OUT					A_2 - Q_7			

See footnotes at end of table.

TABLE III. Group A inspection for device type 01.[1/] -Continued

Subgroup	Symbol	MIL-STD-883 method	Cases E, F Test No.	1 A_0	2 A_1	3 A_2	4 Q0	5 Q_1	6 Q_2	7 Q_3	8 GND	9 Q_4	10 Q_5	11 Q_6	12 Q_7	13 D	14 $\overline{E}$	15 $\overline{C}$	16 V_{CC}	Meas. terminal	Test limits Min	Test limits Max	Test limits Unit
9 T_C=+25°C	t_{PHL2}	3003 (Fig. 5)	174	GND	GND	GND	OUT				GND					5.0 V	IN-B	IN-A	5.0 V	$\overline{C}$ - Q_0	10	45	ns
			175	5.0 V	GND			OUT												$\overline{C}$ - Q_1			
			176	GND	5.0 V				OUT											$\overline{C}$ - Q_2			
			177	5.0 V	5.0 V					OUT										$\overline{C}$ - Q_3			
			178	GND	GND	5.0 V						OUT								$\overline{C}$ - Q_4			
			179	5.0 V	GND								OUT							$\overline{C}$ - Q_5			
			180	GND	5.0 V									OUT						$\overline{C}$ - Q_6			
			181	5.0 V	5.0 V										OUT					$\overline{C}$ - Q_7			
	t_{PHL3}		182	GND	GND	GND	OUT									IN-A	GND	5.0 V		D - Q_0	6	25	
			183	5.0 V	GND			OUT												D - Q_1			
			184	GND	5.0 V				OUT											D - Q_2			
			185	5.0 V	5.0 V					OUT										D - Q_3			
			186	GND	GND	5.0 V						OUT								D - Q_4			
			187	GND	GND								OUT							D - Q_5			
			188	5.0 V	GND									OUT						D - Q_6			
			189	GND	5.0 V										OUT					D - Q_7			
	t_{PHL4}		190	GND	GND	GND	OUT										IN-C			$\overline{E}$ - Q_0		27	
			191	5.0 V	GND			OUT												$\overline{E}$ - Q_1			
			192	GND	5.0 V				OUT											$\overline{E}$ - Q_2			
			193	5.0 V	5.0 V					OUT										$\overline{E}$ - Q_3			
			194	GND	GND	5.0 V						OUT								$\overline{E}$ - Q_4			
			195	5.0 V	GND								OUT							$\overline{E}$ - Q_5			
			196	GND	5.0 V									OUT						$\overline{E}$ - Q_6			
			197	5.0 V	5.0 V										OUT					$\overline{E}$ - Q_7			
10 T_C=+125°C	t_{PLH1}		198	IN-A	GND	GND	OUT									5.0 V	IN-E	IN-B		A_0 - Q_0	10	50	
			199	GND	IN-A	GND	OUT													A_1 - Q_0			
			200	GND	GND	IN-A	OUT													A_2 - Q_0			
			201	IN-C	GND	GND		OUT												A_0 - Q_1			
			202	5.0 V	IN-A	GND		OUT												A_1 - Q_1			
			203	5.0 V	GND	IN-A		OUT												A_2 - Q_1			
			204	IN-A	5.0 V	GND			OUT											A_0 - Q_2			
			205	GND	IN-C	GND			OUT											A_1 - Q_2			
			206	GND	5.0 V	IN-A			OUT											A_2 - Q_2			
			207	IN-C	5.0 V	GND				OUT										A_0 - Q_3			
			208	5.0 V	IN-C	GND				OUT										A_1 - Q_3			
			209	5.0 V	5.0 V	IN-A				OUT										A_2 - Q_3			
			210	IN-A	GND	5.0 V						OUT								A_0 - Q_4			
			211	GND	IN-A	5.0 V						OUT								A_1 - Q_4			
			212	GND	GND	IN-C						OUT								A_2 - Q_4			
			213	IN-C	GND	5.0 V							OUT							A_0 - Q_5			
			214	5.0 V	IN-A	5.0 V							OUT							A_1 - Q_5			
			215	5.0 V	GND	IN-C							OUT							A_2 - Q_5			
			216	IN-A	5.0 V	5.0 V								OUT						A_1 - Q_6			
			217	GND	IN-C	5.0 V								OUT						A_1 - Q_6			
			218	GND	5.0 V	IN-C								OUT						A_2 - Q_6			
			219	IN-C	5.0 V	5.0 V									OUT					A_0 - Q_7			
			220	5.0 V	IN-C	5.0 V									OUT					A_1 - Q_7			
			221	5.0 V	5.0 V	IN-C									OUT					A_2 - Q_7			

See footnotes at end of table.

TABLE III. Group A inspection for device type 01. [1/] -Continued

Subgroup	Symbol	MIL-STD-883 method	Cases E, F Test No.	1 A_0	2 A_1	3 A_2	4 Q_0	5 Q_1	6 Q_2	7 Q_3	8 GND	9 Q_4	10 Q_5	11 Q_6	12 Q_7	13 D	14 $\overline{E}$	15 $\overline{C}$	16 V_{CC}	Meas. terminal	Test limits Min	Max	Unit
10 T_C=+125° C	t_{PLH3}	3003 (Fig. 5)	222	GND	GND	GND	OUT				GND					IN-A	GND	5.0 V	5.0 V	D - Q_0	6	56	ns
			223	5.0 V	GND			OUT												D - Q_1			
			224	GND	5.0 V				OUT											D - Q_2			
			225	5.0 V	5.0 V					OUT										D - Q_3			
			226	GND	GND	5.0 V						OUT								D - Q_4			
			227	5.0 V	GND								OUT							D - Q_5			
			228	GND	5.0 V									OUT						D - Q_6			
			229	5.0 V	5.0 V										OUT					D - D_7			
	t_{PLH4}		230	GND	GND	GND	OUT										IN-C			$\overline{E}$ - Q_0		39	
			231	5.0 V	GND			OUT												$\overline{E}$ - Q_1			
			232	GND	5.0 V				OUT											$\overline{E}$ - Q_2			
			233	5.0 V	5.0 V					OUT										$\overline{E}$ - Q_3			
			234	GND	GND	5.0 V						OUT								$\overline{E}$ - Q_4			
			235	5.0 V	GND								OUT							$\overline{E}$ - Q_5			
			236	GND	5.0 V									OUT						$\overline{E}$ - Q_6			
			237	5.0 V	5.0 V										OUT					$\overline{E}$ - Q_7			
	t_{PHL1}		238	IN-A	GND	GND	OUT									5.0 V	IN-E	IN-B		A_0 - Q_0	10	47	
			239	GND	IN-A	GND	OUT													A_1 - A_0			
			240	GND	GND	IN-A	OUT													A_2 - Q_0			
			241	IN-C	GND	GND		OUT												A_0 - Q_1			
			242	5.0 V	IN-A	GND		OUT												A_1 - Q_1			
			243	5.0 V	GND	IN-A		OUT												A_2 - Q_0			
			244	IN-B	5.0 V	GND			OUT											A_0 - Q_2			
			245	GND	IN-C	GND			OUT											A_1 - Q_2			
			246	GND	5.0 V	IN-A			OUT											A_2 - Q_2			
			247	IN-C	5.0 V	GND				OUT										A_0 - Q_3			
			248	5.0 V	IN-C	GND				OUT										A_1 - Q_3			
			249	5.0 V	5.0 V	IN-A				OUT										A_2 - Q_3			
			250	IN-A	GND	5.0 V						OUT								A_0 - Q_4			
			251	GND	IN-A	5.0 V						OUT								A_1 - Q_4			
			252	GND	GND	IN-C						OUT								A_2 - Q_4			
			253	IN-C	GND	5.0 V							OUT							A_0 - Q_5			
			254	5.0 V	IN-A	5.0 V							OUT							A_1 - Q_5			
			255	5.0 V	GND	IN-C							OUT							A_2 - Q_5			
			256	IN-A	5.0 V	5.0 V								OUT						A_0 - Q_6			
			257	GND	IN-C	5.0 V								OUT						A_1 - Q_6			
			258	GND	5.0 V	IN-C								OUT						A_2 - Q_6			
			259	IN-C	5.0 V	5.0 V									OUT					A_0 - Q_7			
			260	5.0 V	IN-C	5.0 V									OUT					A_1 - Q_7			
			261	5.0 V	5.0 V	IN-C									OUT					A_2 - Q_7			
	t_{PHL2}		262	GND	GND	GND	OUT										IN-B	IN-A		$\overline{C}$ - Q_0		55	
			263	5.0 V	GND			OUT												$\overline{C}$ - Q_1			
			264	GND	5.0 V				OUT											$\overline{C}$ - Q_2			
			265	5.0 V	5.0 V					OUT										$\overline{C}$ - Q_3			
			266	GND	GND	5.0 V						OUT								$\overline{C}$ - Q_4			
			267	5.0 V	GND								OUT							$\overline{C}$ - Q_5			
			268	GND	5.0 V									OUT						$\overline{C}$ - Q_6			
			269	5.0 V	5.0 V										OUT					$\overline{C}$ - Q_7			

See footnotes at end of table.

TABLE III. Group A inspection for device type 01. 1/ -Continued

Subgroup	Symbol	MIL-STD-883 method	Cases E, F Test No.	1 A_0	2 A_1	3 A_2	4 Q_0	5 Q_1	6 Q_2	7 Q_3	8 GND	9 Q_4	10 Q_5	11 Q_6	12 Q_7	13 D	14 $\overline{E}$	15 $\overline{C}$	16 V_{CC}	Meas. terminal	Test limits Min	Max	Unit
10 $T_C = +125°C$	t_{PHL3}	3003 (Fig. 5)	270	GND	GND	GND	OUT				GND					IN-A	GND	5.0 V	5.0 V	D - Q_0	6	40	ns
			271	5.0 V	GND			OUT												D - Q_1			
			272	GND	5.0 V				OUT											D - Q_2			
			273	5.0 V	5.0 V					OUT										D - Q_3			
			274	GND	GND	5.0 V						OUT								D - Q_4			
			275	GND	GND								OUT							D - Q_5			
			276	5.0 V	GND									OUT						D - Q_6			
			277	GND	5.0 V										OUT					D - Q_7			
	t_{PHL4}		278	GND	GND	GND	OUT										IN-C			$\overline{E}$ - Q_0		35	
			279	5.0 V	GND			OUT												$\overline{E}$ - Q_1			
			280	GND	5.0 V				OUT											$\overline{E}$ - Q_2			
			281	5.0 V	5.0 V					OUT										$\overline{E}$ - Q_3			
			282	GND	GND	5.0 V						OUT								$\overline{E}$ - Q_4			
			283	5.0 V	GND								OUT							$\overline{E}$ - Q_5			
			284	GND	5.0 V									OUT						$\overline{E}$ - Q_6			
			285	5.0 V	5.0 V										OUT					$\overline{E}$ - Q_7			
11	Same tests, terminal conditions and limits as for subgroup 10, except T_C = -55°C.																						

1/ Terminal conditions (pins not designated may be high $\geq$ 2.0 V; low $\leq$ 0.8 V; or open.
2/ Input voltages shown are: H = 2.0 V and L = 0.8 V.
3/ Output voltages shall be either:
a. H = 2.4 volts minimum and L = 0.4 volts maximum when using a high-speed checker double comparator, or
b. H > 1.5 volts and L < 1.5 volts when using a high speed checker single comparator.
c. Only attributes data are required for subgroups 7 and 8.

6.3 Ordering data. The acquisition document should specify the following:

a. Complete part number (see 1.2).

b. Requirements for delivery of one copy of the quality conformance inspection data pertinent to the device inspection lot to be supplied with each shipment by the device manufacturer, if applicable.

c. Requirements for certificate of compliance, if applicable.

d. Requirements for notification of change of product or process to the contracting activity, if applicable.

e. Requirements for packaging and packing.

f. Requirements for special carriers, lead lengths, or lead forming, if applicable. These requirements shall not affect the part number. Unless otherwise specified, these requirements shall not apply to direct purchase by or direct shipment to the Government.

6.4 Abbreviations, symbols, and definitions. The abbreviations, symbols, and definitions used herein are defined in MIL-M-38510, MIL-STD-1331, and as follows:

GND - - - - - - - - - - - - - - - - - - Electrical ground (common terminal)
I_{IN} - - - - - - - - - - - - - - - - - - Current flowing into an input terminal
V_{IN} - - - - - - - - - - - - - - - - - - Voltage level at an input terminal

6.5 Logistic support. Lead materials and finishes (see 3.3), are interchangeable. Unless otherwise specified, microcircuits acquired for Government logistic support will be acquired to device class B (see 1.2.2) and lead material and finish C (see 3.3). Longer length leads and lead forming shall not affect the part number.

6.6 Generic test data. Generic test data may be used to satisfy the requirements of 4.4.3. Group C generic test data shall be on date codes no more than one year old and on a die in the same microcircuit group (see appendix E of MIL-M-38510) with the same material, design and process and from the same plant as the die represented. Group D (see 4.4.4) generic data shall be on date codes no more than one year old and on the same package type (see terms, definitions, and symbols of MIL-M-38510) and from the same plant as the package represented. The vendor is required to retain the generic data for a period of not less than 36 months from the date of shipment.

6.7 Substitutability. The cross-reference information below is presented for the convenience of users. Microcircuits covered by this specification will functionally replace the listed generic-industry type. Generic-industry microcircuit types may not have equivalent operational performance characteristics across military temperature ranges or reliability factors equivalent to MIL-M-38510 device types and may have slight physical variations in relation to case size. The presence of this information shall not be deemed as permitting substitution of generic-industry types for MIL-M-38510 types or as a waiver of any of the provisions of MIL-M-38510.

Military device type	Generic-industry type
01	9334

6.8 Ordering guidance. Since the qualification and certification requirements have been removed from the specification, orders may be placed immediately.

6.9 Changes from previous issue. Asterisks are not used in this revision to identify changes with respect to the previous issue, due to the extensiveness of the changes.

Custodians:
Army - ER
Navy - EC
Air Force - 17

Review activities:
Army - AR, MI
Navy - OS, SH
Air Force - 11, 19, 85, 99
DLA - ES

User activities:
Army - SM
Navy - AS, CG, MC

Agent:
DLA - ES

Preparing activity:
Air Force - 17

(Project 5962-0591-7)