MILITARY SPECIFICATION

MICROCIRCUITS, DIGITAL, CMOS, DECODERS, ENCODER, AND DECODERS/DEMULTIPLEXERS MONOLITHIC SILICON, POSITIVE LOGIC

This specification is approved for use by all Departments and Agencies of the Department of Defense.

1. SCOPE

1.1 Scope. This specification covers the detail requirements for monolithic silicon, CMOS logic microcircuits. Two product assurance classes and a choice of case outlines and lead finishes are provided and are reflected in the complete part number.

1.2 Part number. The part number shall be in accordance with MIL-M-38510.

1.2.1 Device type. The device type shall be as follows:

Device type	Circuit
01	4-Bit latch/4-to-16 line decoder
02	4-Bit latch/4-to-16 line decoder
03	8-Bit priority encoder
04	Dual binary to 1 of 4 decoder/multiplexers
05	Dual binary to 1 of 4 decoder/demultiplexers

1.2.2 Device class. The device class shall be the product assurance level as defined in MIL-M-38510.

1.2.3 Case outline. The case outline shall be designated as follows:

Outline letter	Case outline (see MIL-M-38510, appendix C)
E	D-2 (16-lead, 1/4" x 7/8", dual-in-line)
F	F-5 (16-lead, 1/4" x 3/8", flat-pack)
J	D-3 (24-lead, 1/2" x 1-1/4", dual-in-line)
K	F-6 (24-lead, 3/8" x 5/8" flat-pack)
X	See figure 1 (24-lead, 1/2" x 1-1/4", dual-in-line)
Y	See figure 1 (24-lead, 5/8" x 3/4", flat-pack)
Z	F-5 (16-lead, 1/4" x 3/8", flat-pack except A dimension = 0.1" (2.54 mm) maximum)
U	F-6 (24-lead, 3/8" x 5/8", flat-pack, except A dimension = 0.1" (2.54 mm) maximum)

NOTES:

1. As an exception to 3.5.6.2.3 of MIL-M-38510, for case outlines Z and U only, the leads of bottom brazed ceramic packages (i.e., configuration 2 of case outlines F-5 or F-6) may have electroless nickel undercoating which shall be 50 to 200 microinches (1.27 to 5.08 μm) thick provided the lead finish is hot solder dip (i.e., finish letter A) and provided that, after any lead forming, an additional hot solder dip coating is applied which shall extend from the outer tip of the lead to no more than 0.015 inch (0.38 mm) from the package edge.

2. For bottom or side braded packages, case outlines Z and U only, the S_1 dimension may go to .000 inch (.00 mm) mimimum.

Beneficial comments (recommendations, additions, deletions) and any pertinent data which may be of use in improving this document should be addressed to: National Aeronautics and Space Administration, George C, Marshall Space Flight Center, ATTN: EG02, Marshall Space Flight Center, Alabama 35812 by using the self-addressed Standardization Document Improvement Proposal (DD Form 1426) appearing at the end of this document or by letter.

1.3 Absolute maximum ratings.

Supply voltage range- - - - - - - - - - -	-0.5 V dc to +18 V dc
Input current (each input)- - - - - - - -	±10 mA
Input voltage range - - - - - - - - - - - -	$(V_{SS} -0.5) \leq V_I \leq (V_{DD} +0.5)$
Storage temperature range - - - - - - - -	-65°C to +175°C
Maximum power dissipation (P_D) 1/ - - - -	200 mW
Lead temperature (soldering, 10 seconds)-	+300°C
Thermal resistance, junction-to-case: - -	(see MIL-M-38510 appendix C)
Junction temperature (T_J) - - - - - - - -	+175°C

1.4 Recommended operating conditions.

Supply voltage (V_{DD} - V_{SS})- - - - - - -	4.5 V dc minimum to 5.5 V dc maximum
Input low (V_{IL}) voltage range - - - - -	0-1.5 V dc @ V_{DD} = 5 V dc, V_{OL} = 10% V_{DD}, V_{OH} = 90% V_{DD}, 0-2.0 V dc @ V_{DD} = 10 V dc, 0-4.0 V dc, @ V_{DD} = 15 V dc,
Input high (V_{IH}) voltage range- - - - -	3.5-5.0 V dc @ V_{DD} = 5 V dc, V_{OL} = 10% V_{DD}, V_{OH} = 90% V_{DD}, 8.0-10.0 V dc @ V_{DD} = 10 V dc, 11.0-15 V dc @ V_{DD} = 15 V dc
Ambient operating temperature range (T_C)-	-55°C to +125°C

2. APPLICABLE DOCUMENTS

2.1 Government specifications and standards. Unless otherwise specified, the following specifications and standards, of the issue listed in that issue of the Department of Defense Index of Specifications and Standards specified in the solicitation, form a part of this specification to the extent specified herein.

SPECIFICATION

MILITARY

MIL-M-38510 - Microcircuits, General Specification for.

STANDARD

MILITARY

MIL-STD-883 - Test Methods and Procedures for Microelectronics.

(Copies of specifications, standards, handbooks, drawings, and publications required by manufacturers in connection with specific acquisition functions should be obtained from the contracting activity or as directed by the contracting officer.)

2.2 Order of precedence. In the event of a conflict between the text of this specification and the references cited herein, the text of this specification shall take precedence.

3. REQUIREMENTS

3.1 Detail specification. The individual item requirements shall be in accordance with MIL-M-38510, and as specified herein.

3.2 Design, construction, and physical dimensions. The design, construction, and physical dimensions shall be as specified in MIL-M-38510 and herein. Although eutectic die bonding is preferred, epoxy die bonding may be performed. However, the resin used shall be Dupont 5504 Conductive Silver Paste, or equivalent which is cured at 200°C ±10°C for a minimum of 2 hours. The use of equivalent epoxies or cure cycles shall be approved by the qualifying activity. Equivalency shall be demonstrated in data submitted to the qualifying activity for verification.

3.2.1 Terminal connections. The terminal connections shall be as specified on figure 2.

3.2.2 Logic diagrams. The logic diagrams shall be as specified on figure 3.

3.2.3 Truth tables. The truth tables shall be as specified on figure 4.

3.2.4 Schematic circuits. The schematic circuits shall be submitted to the preparing activity prior to inclusion of a manufacturer's device in this specification and shall be submitted to the qualifying activity as a prerequisite for qualification. All qualified manufacturers' schematics shall be maintained and available upon request.

3.2.5 Case outlines. The case outlines shall be as specified in 1.2.3.

3.3 Lead material and finish. The lead material and finish shall be in accordance with MIL-M-38510 and 6.4 herein.

3.4 Electrical performance characteristics. The electrical performance characteristics are as specified in table I, and apply over the full recommended ambient operating temperature range, unless otherwise specified.

3.5 Electrical test requirements. The electrical test requirements for each device class shall be the subgroups specified in table II. The electrical tests for each subgroup are described in table III.

3.6 Marking. Marking shall be in accordance with MIL-M-38510.

3.6.1. Total dose radiation hardness identifier. Total dose radiation hardness identifier shall be in accordance with MIL-M-38510 and 4.5.5 herein.

3.6.2 Serialization. All class S devices shall be serialized in accordance with MIL-M-38510.

3.6.3 Correctness of indexing and markings. All devices shall be subjected to the final electrical tests specified in table II after part number marking to verify that they are correctly indexed and identified by part number. Optionally, an approved electrical test may be devised especially for this requirement.

3.7 Microcircuit group assignment. The devices covered by this specification shall be in microcircuit group number 39 (see MIL-M-38510, appendix E).

4. QUALITY ASSURANCE PROVISIONS

4.1 Sampling and inspection. Sampling and inspection procedures shall be in accordance with MIL-M-38510 and methods 5005 and 5007, as applicable, of MIL-STD-883, except as modified herein.

4.2 Screening. Screening shall be in accordance with method 5004 of MIL-STD-883, and shall be conducted on all devices prior to qualification and quality conformance inspection. The following additional criteria shall apply:

a. Delete the sequence specified in 3.1.9 through 3.1.13 of method 5004 and substitute lines 1 through 7 of table II herein.

b. Burn-in tests (method 1015 of MIL-STD-883).

(1) Static tests (test condition A) using circuit shown on figure 5 or equivalent. Ambient temperature (T_A) shall be 125°C minimum. Test duration for each static test shall be 24 hours minimum for class S devices and in accordance with table I of method 1015 for class B devices.

(2) Dynamic test (test condition D) using circuit shown on figure 6 or equivalent. Ambient temperture (T_A) shall be 125°C minimum. Test duration shall be in accordance with table I of method 1015.

c. Interim and final electrical parameters shall be as specified in table II herein.

TABLE I. Electrical performance characteristics.

Test	Symbol	Conditions V_{SS} = 0 V -55°C ≤ T_A ≤ 125°C Unless otherwise specified	Device type	Limits Min	Limits Max	Units
Positive clamping input to V_{DD}	$V_{IC(pos)}$	T_A = 25°C, V_{DD} = GND, V_{SS} = Open, Output = Open, I_{IN} = 1 mA	All	-	1.5	Vdc
Negative clamping input to V_{SS}	$V_{IC(neg)}$	T_A = 25°C, V_{DD} = Open, V_{SS} = GND, Output = Open, I_{IN} = -1 mA	All	-	-6	Vdc
Quiescent supply current	I_{SS} or I_{DD}	V_{DD} = 18 Vdc, V_{IN} = V_{SS} or V_{DD} All input combinations	All	-	-2.5	μA
High level output voltage	V_{OH1}	V_{DD} = 15 Vdc See table III $\lvert I_O \rvert$ ≤ 1 μA	All	14.95	-	Vdc
Low level output voltage	V_{OL1}	V_{DD} = 15 Vdc See table III $\lvert I_O \rvert$ ≤ 1 μA	All	-	0.05	Vdc
Input high voltage	V_{IH1}	V_{DD} = 5 Vdc See table III $\lvert I_O \rvert$ ≤ 1 μA	All	3.5	-	Vdc
	V_{IH2}	V_{DD} = 10 Vdc See table III $\lvert I_O \rvert$ ≤ 1 μA	All	7.0	-	Vdc
	V_{IH3}	V_{DD} = 15 Vdc See table III $\lvert I_O \rvert$ ≤ 1 μA	All	11.0	-	Vdc

See note at end of table.

TABLE I. Electrical performance characteristics - Continued.

Test	Symbol	Conditions V_{SS} = 0 V -55°C ≤ T_A ≤ 125°C Unless otherwise specified	Device type	Limits		Units
				Min	Max	
Input low voltage	V_{IL1}	V_{DD} = 5 Vdc See table III $\lvert I_O \rvert \leq 1$ µA	All	-	1.5	Vdc
	V_{IL2}	V_{DD} = 10 Vdc See table III $\lvert I_O \rvert \leq 1$ µA	All	-	3.0	Vdc
	V_{IL3}	V_{DD} = 15 Vdc See table III $\lvert I_O \rvert \leq 1$ µA	All	-	4.0	Vdc
Output high (source) current	I_{OH1}	V_{DD} = 5 Vdc V_{OH} = 4.6 Vdc	All	-0.36	-	mAdc
	I_{OH2}	V_{DD} = 15 Vdc V_{OH} = 13.5 Vdc	All	-2.4	-	mAdc
Output low (sink) current	I_{OL1}	V_{DD} = 5 Vdc V_{OL} = 0.4 Vdc	All	0.36	-	mAdc
	I_{OL2}	V_{DD} = 15 Vdc V_{OL} = 1.5 Vdc	All	2.4	-	mAdc
Input leakage 1/ current	I_{IH}	V_{DD} = 18 Vdc Measure inputs sequentially connect all unused inputs to V_{SS}.	All	-	45	nA
Input leakage 1/ current	I_{IL}	V_{DD} = 18 Vdc Measure inputs sequentially connect all unused inputs to V_{DD}	All	-	-45	nA

See note at end of table.

TABLE I. Electrical performance characteristics - Continued.

Test	Symbol	Conditions V_{SS} = 0 V -55°C ≤ T_A ≤ 125°C Unless otherwise specified	Device type	Limits Min	Limits Max	Units
Input capacitance	C_i	V_{DD} = 0 Vdc, f = 1 MHz, T_A = 25°C	All	-	7.5	pF
Input test voltage	V_{ZAP}	C_1 = 100 pF R_z = 1.5 kΩ (see 4.5.3)	All	400	-	V
Minimum setup time	t_s	V_{DD} = 5 Vdc, C_L = 50 pF (See figure 7)	01 02		210	ns
Propagation delay times data to output High to low level Low to high level	t_{PHL1} t_{PLH1}	V_{DD} = 5 Vdc C_L = 50 pF R_L = 200 kΩ (See figure 7)	01 02	49	1360	ns
Propagation delay times inhibit to output High to low level Low to high level	t_{PHL2} t_{PLH2}		01 02	25	700	ns
Propagation delay times E1 to E0 High to low level Low to high level	t_{PHL1} t_{PLH1}		03	11	310	ns
Propagation delay times E1 to GS High to low level Low to high level	t_{PHL2} t_{PLH2}		03	11	310	ns
Propagation delay times E1 to Qn outputs High to low level Low to high level	t_{PHL3} t_{PLH3}		03	17	480	ns
Propagation delay times Dn to GS High to low level Low to high level	t_{PHL4} t_{PLH4}		03	17	480	ns
Propagation delay times Dn to Qn outputs High to low level Low to high level	t_{PHL5} t_{PLH5}		03	22	620	ns

See note at end of table.

TABLE I. Electrical performance characteristics - Continued.

Test	Symbol	Conditions V_{SS} = o V -55°C ≤ T_A ≤ 125°C Unless otherwise specified	Device type	Limits Min	Limits Max	Units
Propagation delay times input to output High to low level Low to high level	t_{PHL1} t_{PLH1}	V_{DD} = 5 Vdc C_L = 50 pF R_L = 200 kΩ (See figure 7)	04	22	620	ns
Propagation delay times E to output High to low level Low to high level	t_{PHL2} t_{PLH2}		04	20	560	ns
Propagation delay times input to outputs High to low level Low to high level	t_{PHL1} t_{PLH1}		05	22	620	ns
Propagation delay times E to outputs High to low level Low to high level	t_{PHL2} t_{PLH2}		05	20	560	ns
Transition times High to low level	t_{THL}	V_{DD} = 5 Vdc, C_L = 50 pF R_L = 200 kΩ (See figure 7)	All	10	280	ns
Low to high level	t_{TLH}		All	10	280	ns
Propagation delay times data to output High to low level Low to high level	t_{PHL1} t_{PLH1}	V_{DD} = 10 Vdc R_L = 200 kΩ C_L = 50 pF (See figure 7)	01 02	19	370	ns
Propagation delay times inhibit to output High to low level Low to high level	t_{PHL2} t_{PLH2}		01 02	11	220	ns
Propagation delay times E1 to E0 High to low level Low to high level	t_{PHL1} t_{PLH1}		03	6	110	ns

See note at end of table.

TABLE I. Electrical performance characteristics - Continued.

Test	Symbol	Conditions V_{SS} = 0 V -55°C ≤ T_A ≤ 125°C Unless otherwise specified	Device type	Limits Min	Limits Max	Units
Propagation delay times E1 to GS High to low level Low to high level	t_{PHL2} t_{PLH2}	V_{DD} = 10 Vdc C_L = 50 pF R_L = 200 kΩ (See figure 7)	03	6	110	ns
Propagation delay times E1 to Qn outputs High to low level Low to high level	t_{PHL3} t_{PLH3}		03	9	170	ns
Propagation delay times Dn to GS High to low level Low to high level	t_{PHL4} t_{PLH4}		03	9	170	ns
Propagation delay times Dn to Qn outputs High to low level Low to high level	t_{PHL5} t_{PLH5}		03	11	220	ns
Propagation delay times input to output High to low level Low to high level	t_{PHL1} t_{PLH1}		04	10	190	ns
Propagation delay times E to output High to low level Low to high level	t_{PHL2} t_{PLH2}		04	9	170	ns
Propagation delay times input to outputs High to low level Low to high level	t_{PHL1} t_{PLH1}		05	10	190	ns
Propagation delay times E to outputs High to low level Low to high level	t_{PHL2} t_{PLH2}		05	9	170	ns
Transition times High to low level Low to high level	t_{THL} t_{TLH}	V_{DD} = 10 Vdc, C_L = 50 pF R_L = 200 kΩ (See figure 7)	All All	5 5	100 100	ns ns

1/ Input current of one input node.

TABLE II. Burn-in and electrical test requirements.

Line no.	Applicable tests and MIL-STD-883 test methods	Class S device 1/				Class B device 1/			
		Ref. par.	Table 2/ III sub-groups	Table 3/ IV delta limits	Test circuit figure	Ref. par.	Table 2/ III sub-groups	Table 3/ IV delta limits	Test circuit figure
1	Interim electrical parameters (method 5004)		1				1		
2	Static burn-in I (method 1015)	4.2b 4.5.2			5				
3	Same as line 1		1	Δ					
4	Static burn-in II (method 1015)	4.2b 4.5.2			5	4.2b 4.5.2	4/		5
5	Same as line 1		1*	Δ		4.2d	1*	Δ	
6	Dynamic burn-in (method 1015)	4.2b 4.5.2			6				
7	Same as line 1	4.2d	1*	Δ					
8	Final electrical parameters (method 5004)		1*,2,3 7,9				1*,2,3, 7,9		
9	Group A test requirements (method 5005)	4.4.1	1,2,3,4, 7,8,9, 10,11			4.4.1	1,2,3, 4,7,9, 10,11		
10	Group B V_{ZAP} requirement	4.4.2 4.5.3			8	4.4.2 4.5.3			8
11	Group C end-point electrical parameters (method 5005)					4.4.3	1,2,3	Δ	
13	Group D end-point electrical parameters (method 5005)	4.4.4	1,2,3			4.4.4	1,2,3		

1/ Blank spaces indicate tests are not applicable.

2/ (*) indicates PDA applied to subgroup 1 (see 4.2.1).

3/ (Δ) indicates delta limit shall be required only on table III subgroup 1, where specified, and delta values shall be computed with reference to the previous interim electrical parameters.

4/ The device manufacturer may at his option either perform delta measurements or within 24 hours after burn-in (or removal of bias) perform the final electrical parameter measurements.

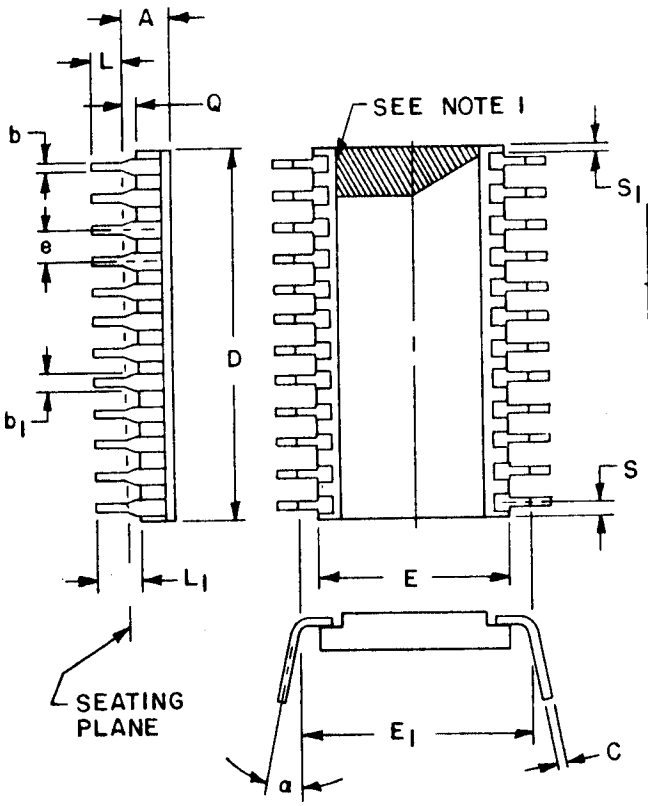

SYMBOL	INCHES		MILLIMETERS		NOTES
	MIN	MAX	MIN	MAX	
A		.225		5.72	
b	.014	.023	.36	.58	8
b_1	.030	.070	.76	1.78	2,8
C	.008	.015	.20	.38	8
D		1.290		32.77	4
E	.450	.610	11.43	15.49	4
E_1	.590	.620	14.99	15.75	7
e	.100 BSC		2.54 BSC		5,9
L	.120	.200	3.05	5.08	
L_1	.150		3.81		
Q	.015	.075	.38	1.90	3
S		.098		2.49	6
S_1	.005		.13		6,10
α	0°	15°	0°	15°	

NOTES:
1. Index area; a notch or a pin one identification mark shall be located adjacent to pin one and shall be located within the shaded area shown. The manufacturer's identification shall not be used as a pin one identification mark.
2. The minimum limit for dimension S_1 may be .020 (.51 mm) for leads number 1, 12, 13, and 24 only.
3. Dimension Q shall be measured from the seating plane to the base plane.
4. This dimension allows for off-center lid, meniscus and glass overrun.
5. The basic pin spacing is .100 (2.54 mm) between centerlines. Each pin centerline shall be located within ±.010 (.25 mm) of its exact logitudinal position relative to pins 1 and 24.
6. Applies to all four corners (leads number 1, 12, 13, and 24).
7. Lead center when α is 0°. E_1 shall be measured at the centerline of the leads.
8. All leads.
9. Twenty-two spaces.
10. Dimension S_1 may be .000 (.00 mm) if the leads are brazed to the ceramic body.

FIGURE 1. Case outline X (24-lead, 1/2" x 1-1/4").

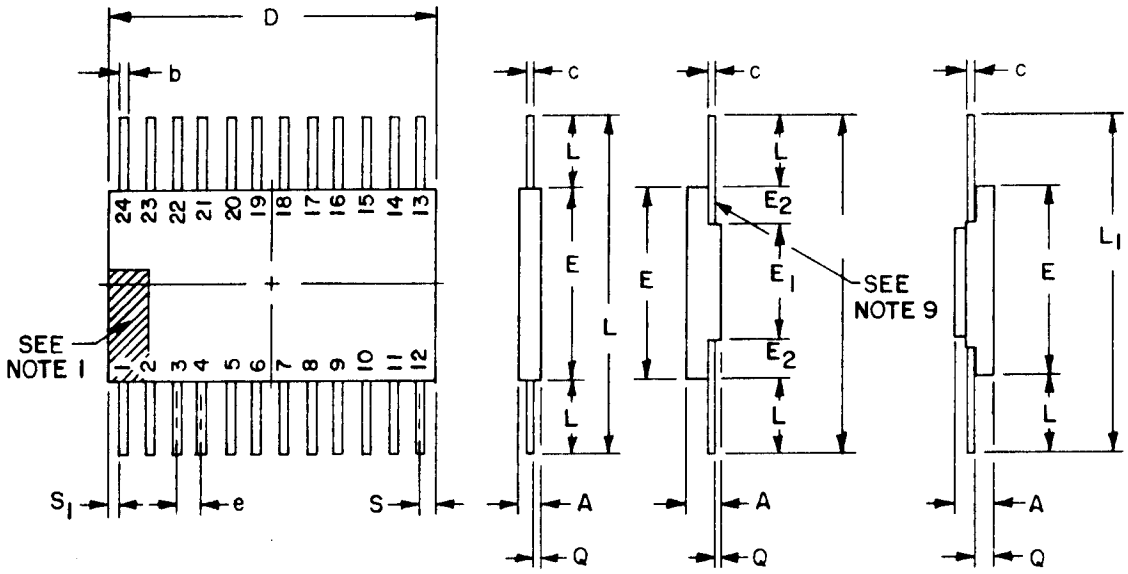

SYMBOL	INCHES		MILLIMETERS		NOTES
	MIN	MAX	MIN	MAX	
A	.045	.115	1.14	2.92	
b	.015	.019	.38	.48	5
c	.003	.006	.08	.15	5
D		.725		18.42	3
E	.570	.650	14.48	16.51	3
e	.050 BSC		1.27 BSC		4,6
L	.250	.370	6.35	9.40	
L_1	.860		21.84		
Q	.010	.060	.25	1.52	
S		.045		1.14	7
S_1	.005		.13		7,8

NOTES:
1. Index area; a notch or a pin one identification mark shall be located adjacent to pin one and shall be within the shaded area shown. The manufacturer's identification shall not be used as a pin one identification mark.
2. Dimension Q shall be measured at the point of exit of the lead from the body.
3. This dimension allows for off-center lid, meniscus and glass overrun.
4. The basic pin spacing is .050 (1.27 mm) between centerlines. Each pin centerline shall be located within ±.005 (.13 mm) of its exact logitudinal position relative to pins 1 and 24.
5. All leads.
6. Twenty-two spaces.
7. Applies to all four corners (leads number 1, 12, 13, and 24).
8. Dimension S_1 may be .000 (.00 mm) if leads number 1, 12, 13, and 24 bend toward the cavity of the package within one lead width from the point of entry of the lead into the body or if the leads are brazed to the metallized ceramic body.
9. Optional configuration. If this configuration is used, no organic or polymeric materials shall be molded to the bottom of the package to cover the leads.

FIGURE 1. Case outline Y (24-lead 5/8" x 3/4") - Continued.

Device types 01 and 02
Cases J, K, X, Y and U

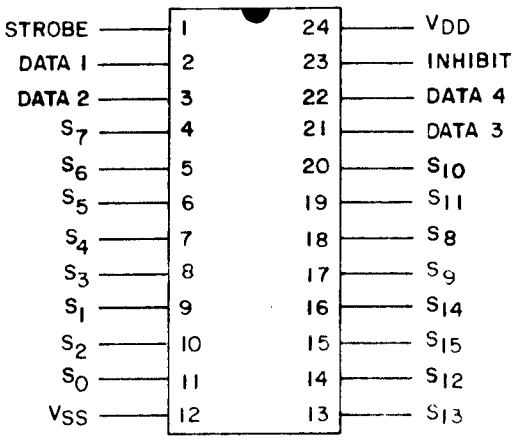

Device type 03
Cases E, F, and Z

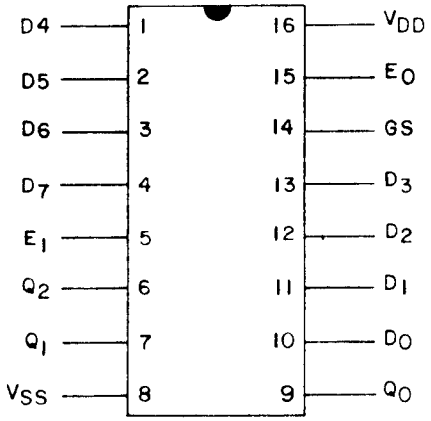

Device type 04
Cases E, F, and Z

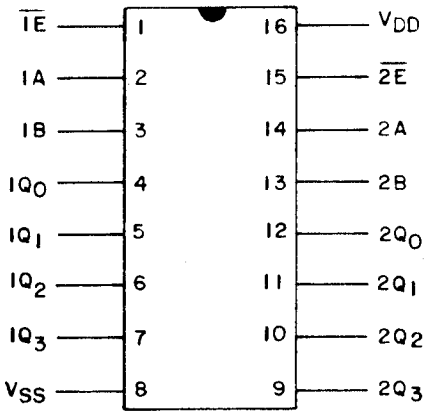

Device type 05
Cases E, F, and Z

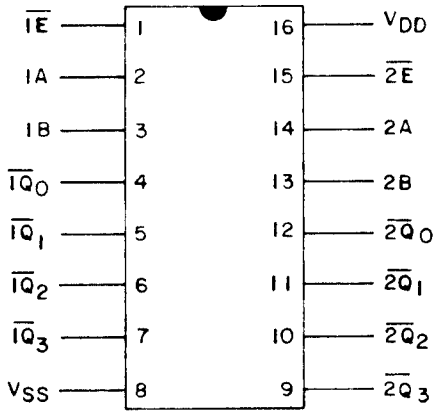

FIGURE 2. Terminal connections.

DEVICE TYPE 01

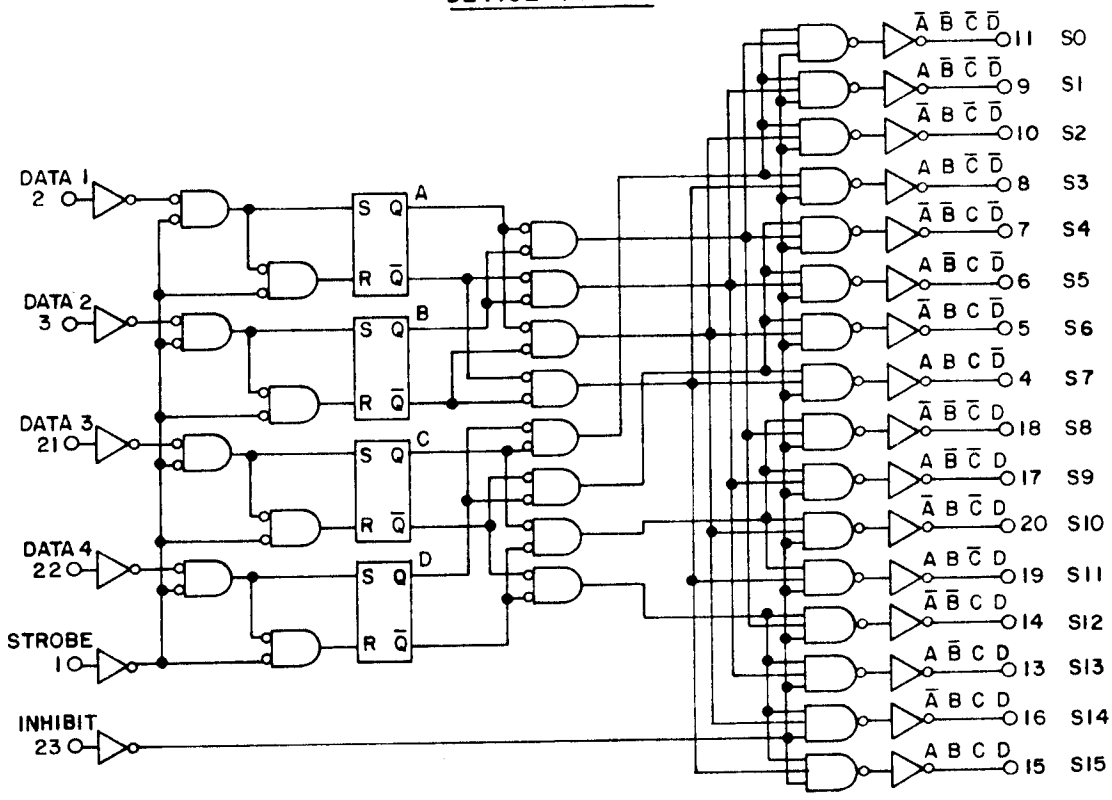

FIGURE 3. Logic diagrams.

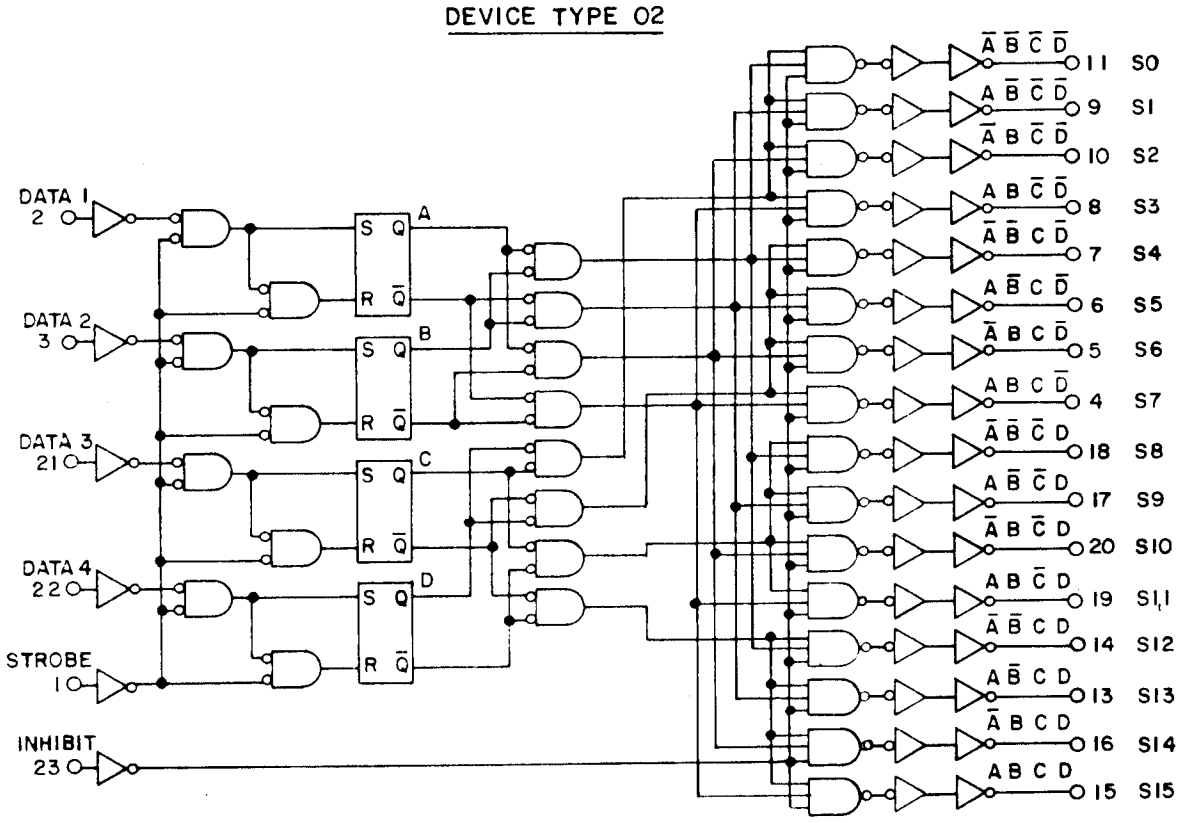

FIGURE 3. Logic diagrams - Continued.

DEVICE TYPE 03

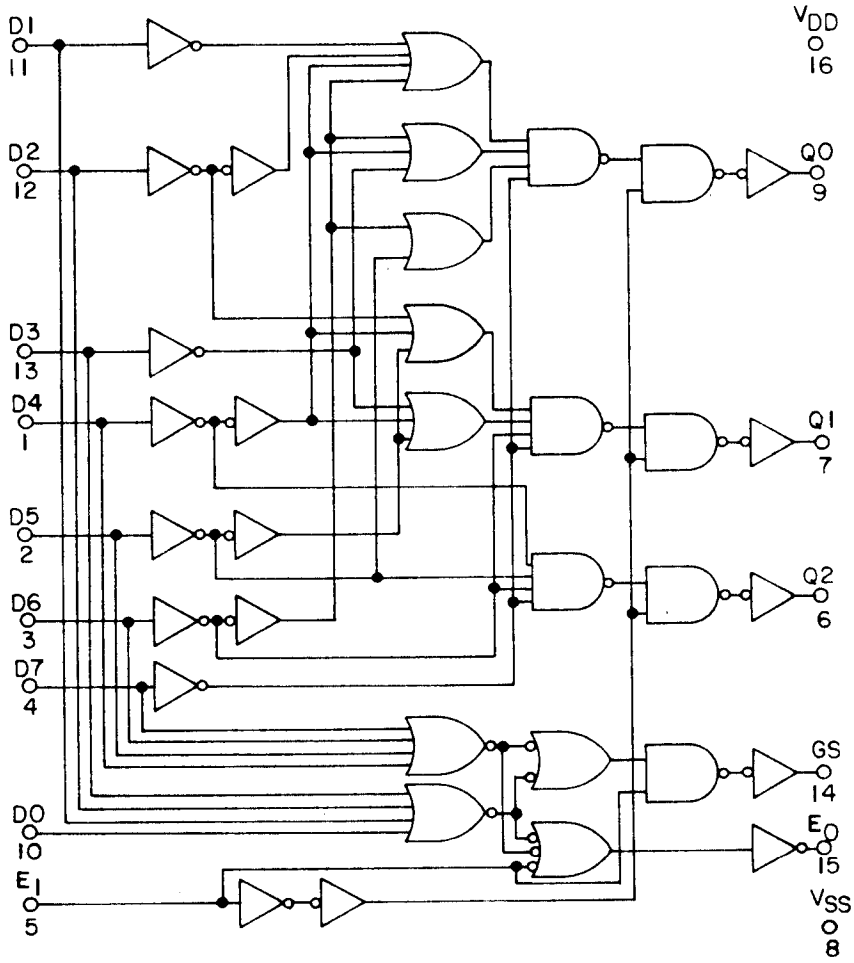

FIGURE 3. Logic diagrams - Continued.

DEVICE TYPE 04
(ONE OF TWO CIRCUITS SHOWN)

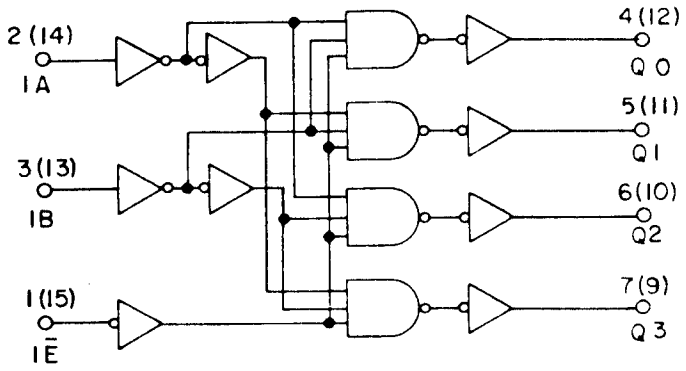

DEVICE TYPE 05
(ONE OF TWO CIRCUITS SHOWN)

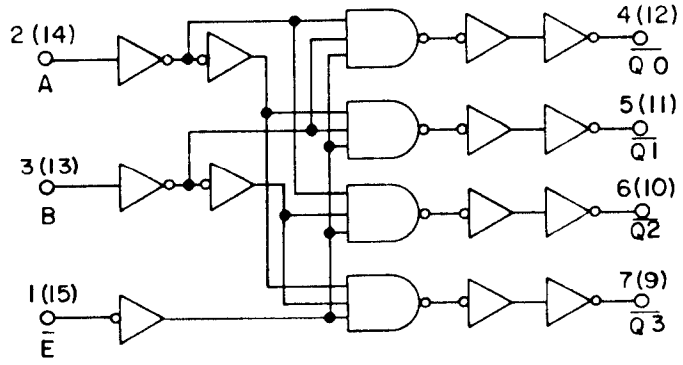

FIGURE 3. Logic diagrams - Continued.

Device types 01 and 02

DECODE TRUTH TABLE (Strobe = 1)

Inhibit	Decoder inputs				Selected output Type 01 = Logic 1 (High) Type 02 = Logic 0 (Low)
	D_4	D_3	D_2	D_1	
0	0	0	0	0	S0
0	0	0	0	1	S1
0	0	0	1	0	S2
0	0	0	1	1	S3
0	0	1	0	0	S4
0	0	1	0	1	S5
0	0	1	1	0	S6
0	0	1	1	1	S7
0	1	0	0	0	S8
0	1	0	0	1	S9
0	1	0	1	0	S10
0	1	0	1	1	S11
0	1	1	0	0	S12
0	1	1	0	1	S13
0	1	1	1	0	S14
0	1	1	1	1	S15
1	X	X	X	X	All outputs = 0, type 01 All outputs = 1, type 02

X = Don't care Logic 1 = High Logic 0 = Low

Device type 03

Input									Output				
E_1	D7	D6	D5	D4	D3	D2	D1	D0	GS	Q2	Q1	Q0	E_0
0	X	X	X	X	X	X	X	X	0	0	0	0	0
1	0	0	0	0	0	0	0	0	0	0	0	0	1
1	1	X	X	X	X	X	X	X	1	1	1	1	0
1	0	1	X	X	X	X	X	X	1	1	1	0	0
1	0	0	1	X	X	X	X	X	1	1	0	1	0
1	0	0	0	1	X	X	X	X	1	1	0	0	0
1	0	0	0	0	1	X	X	X	1	0	1	1	0
1	0	0	0	0	0	1	X	X	1	0	1	0	0
1	0	0	0	0	0	0	1	X	1	0	0	1	0
1	0	0	0	0	0	0	0	1	1	0	0	0	0

X = Don't Care Logic 1 = High Logic 0 = Low

FIGURE 4. Truth table.

Device type 04

TRUTH TABLE						
Inputs			Outputs			
E	B	A	Q3	Q2	Q1	Q0
0	0	0	0	0	0	1
0	0	1	0	0	1	0
0	1	0	0	1	0	0
0	1	1	1	0	0	0
1	X	X	0	0	0	0

X = Don't Care
Logic 1 = High; Logic 0 = Low

Device type 05

TRUTH TABLE						
Inputs			Outputs			
E	B	A	$\overline{Q3}$	$\overline{Q2}$	$\overline{Q1}$	$\overline{Q0}$
0	0	0	1	1	1	0
0	0	1	1	1	0	1
0	1	0	1	0	1	1
0	1	1	0	1	1	1
1	X	X	1	1	1	1

X = Don't Care
Logic 1 = High; Logic 0 = Low

FIGURE 4. Truth table - Continued.

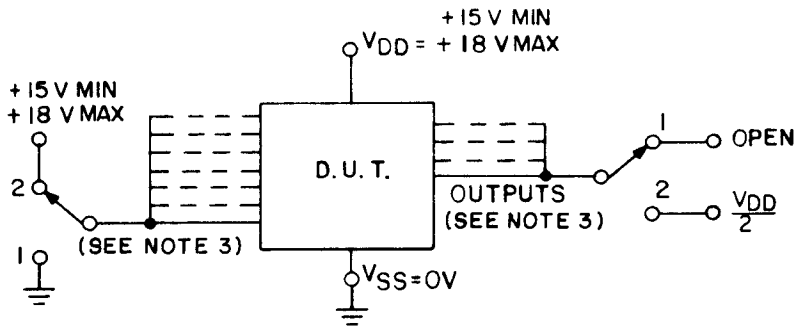

NOTES:
1. For static burn-in I, all inputs are connected to 0 volts, switch position 1.
2. For static burn-in II, all inputs are connected to V_{DD}, switch position 2.
3. Except for V_{DD} and V_{SS}, each terminal shall be connected through a resistor whose value is 2 kΩ to 47 kΩ. The actual measured value of the resistor selected shall not exeed ±20% of its branded value due to use, heat or age.
4. Output may be in switch position 1 or 2.

FIGURE 5. Static burn-in test circuits.

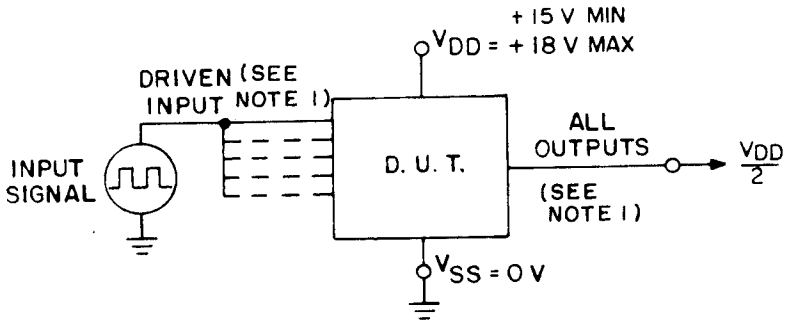

NOTES:
1. Except for V_{DD} and V_{SS}, each terminal shall be connected through a resistor whose value is 2 kΩ to 47 kΩ. The actual measured value of the resistor selected shall not exceed ±20% of its branded value due to use, heat or age.
2. Input signal requirements:
   a. Square wave, 50% duty cycle.
   b. 25 kHz < PRR < 1 MHz.
   c. t_{TLH} and t_{THL} < 1 µs.
   d. Voltage level:
      Minimum = V_{SS} -0.5 V, +10% V_{DD}.
      Maximum = V_{DD} +0.5, -10% V_{DD}.
3. Strobe input shall be connected to V_{DD} and inhibit shall be connected to V_{SS} (for device types 01 and 02 only).
4. Enable input shall be connected to V_{SS} for device types 04 and 05; enable input shall be connected to V_{DD} for device type 03.

FIGURE 6. Dynamic burn-in and steady-state life test circuits.

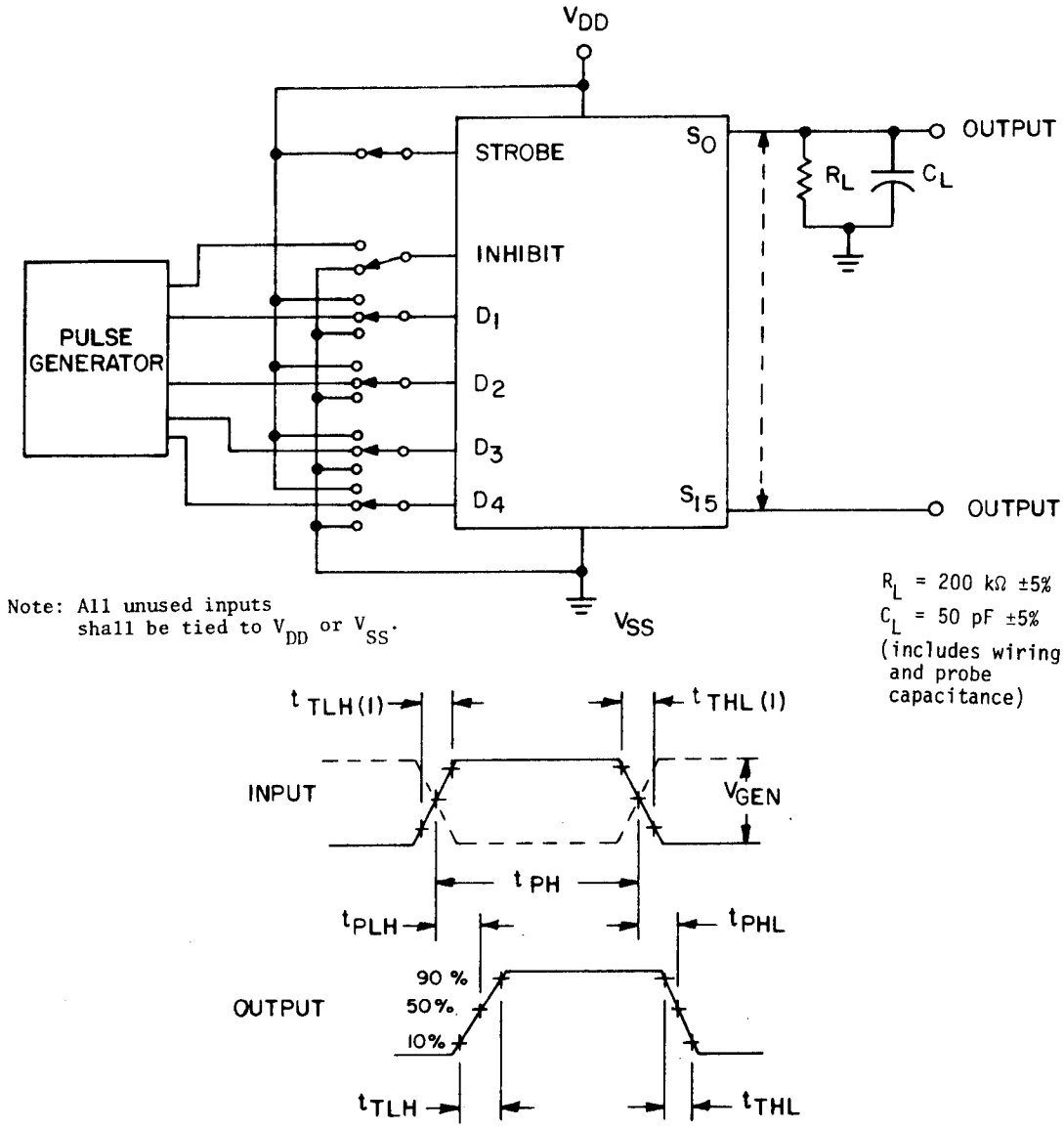

NOTES:
1. The pulse generator has the following characteristics: $V_{GEN} = V_{DD} \pm 1.0\%$, $t_{PH} = 1.0 \pm 0.1$ µs, $t_{THL(1)}$ and $t_{TLH(1)} = 20 \pm 2$ ns and PRR = 500 kHz.
2. All outputs shall have the same load circuit as shown for the S_0 output.
3. See table III for complete terminal conditions.

FIGURE 7. Switching time test circuit and waveforms for device types 01 and 02.

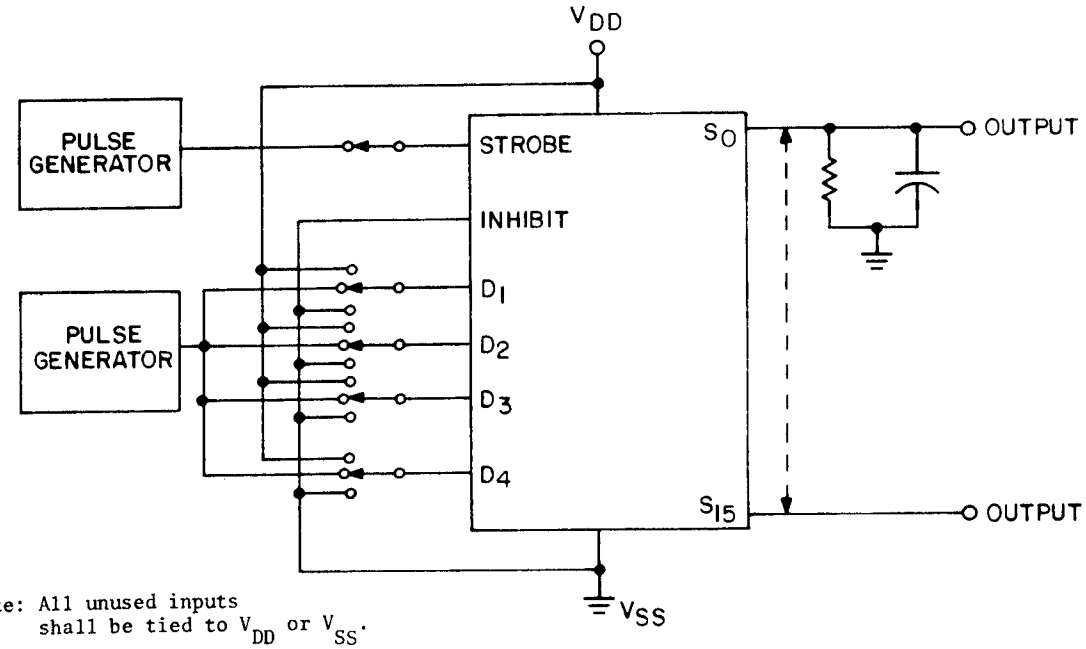

Note: All unused inputs shall be tied to V_{DD} or V_{SS}.

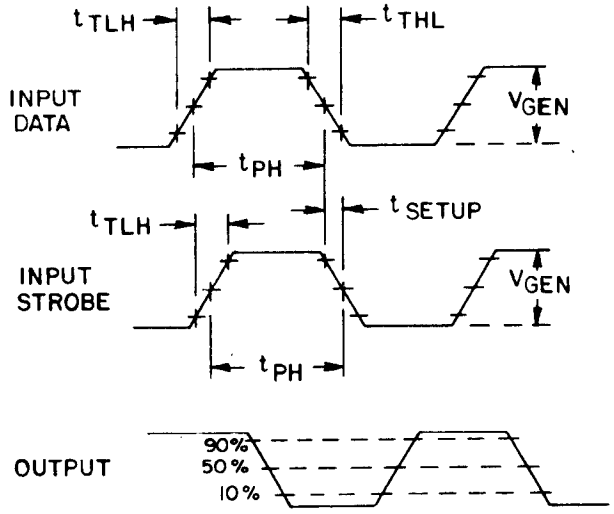

NOTES:

1. The pulse generators have the following characteristics: $V_{GEN} = V_{DD} \pm 1.0\%$, $t_{PH} = 1.0\ \mu s \pm 0.1\ \mu s$, t_{THL} and $t_{TLH} = 20 \pm 2$ ns and PRR = 500 kHz.
2. Requirements for setup times are considered met if proper output state changes occur with t_{SETUP} set to that given in the limits column of table III.

FIGURE 7. Switching time circuit and waveforms for device types 01 and 02 - Continued.

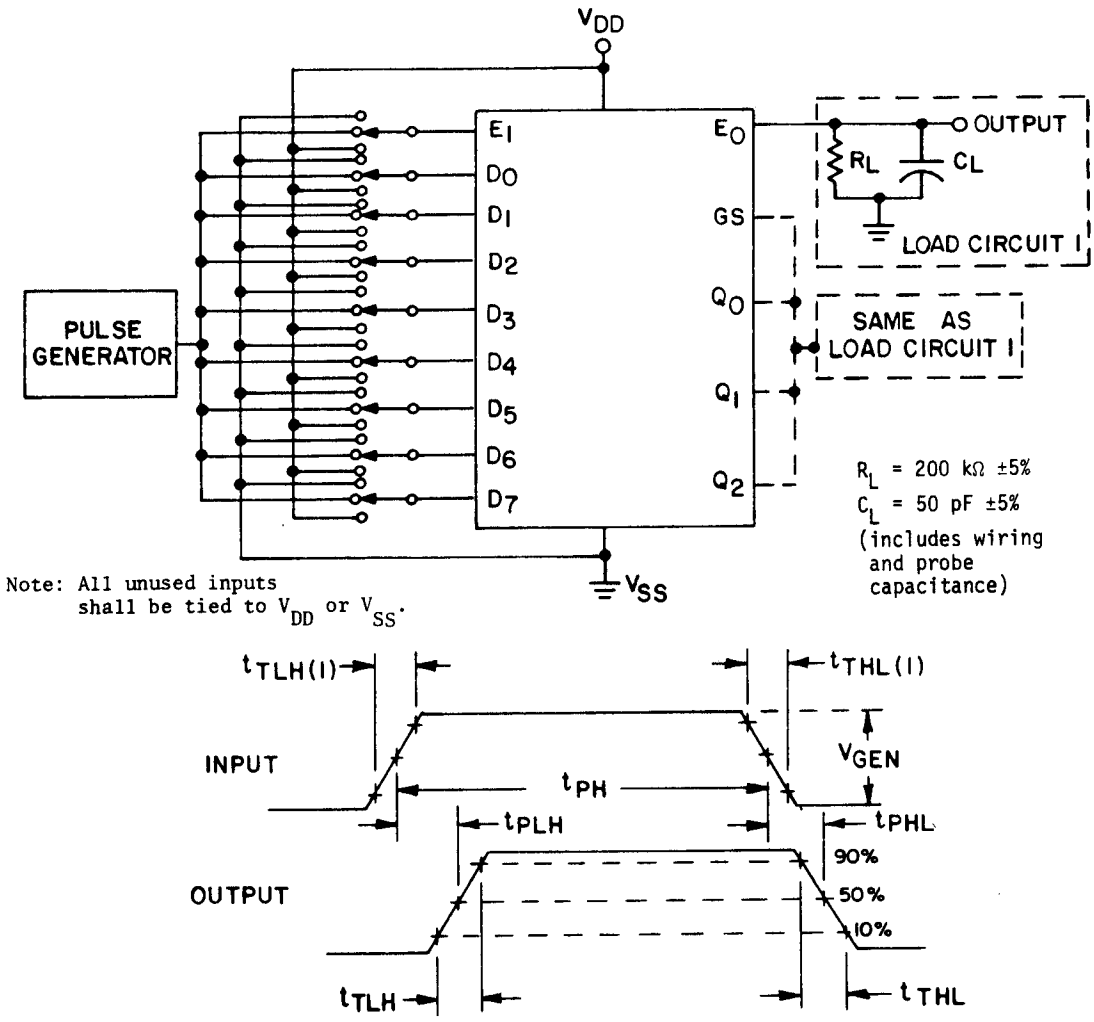

NOTES:
1. The pulse generator has the following characteristics: $V_{GEN} = V_{DD} \pm 1\%$, $t_{PH} = 1.0 \pm 0.1$ µs, $t_{THL(1)}$ and $t_{TLH(1)} = 20 \pm 2$ ns and PRR = 1 MHz.
2. See table III for complete terminal conditions.

FIGURE 7. Switching time test circuit and waveforms for device type 03 - Continued.

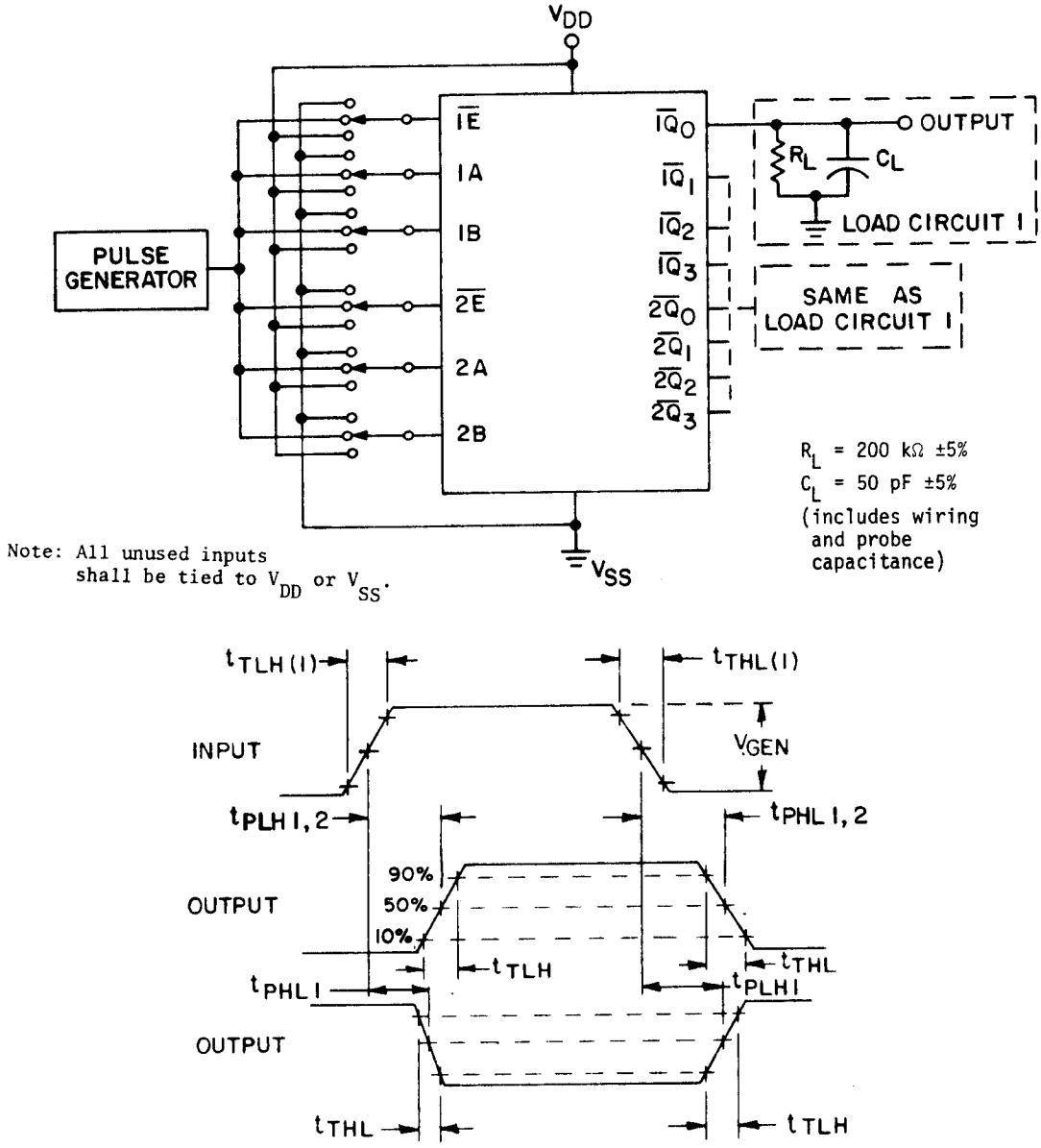

NOTES:
1. The pulse generator has the following characteristics: $V_{GEN} = V_{DD} \pm 1\%$, $t_{PH} = 1.0 \pm 0.1$ µs, $t_{THL(1)}$ and $t_{TLH(1)} = 20 \pm 2$ ns and PRR = 1 MHz.
2. See table III for complete terminal conditions.

FIGURE 7. Switching time test circuit and waveforms for device type 05 - Continued.

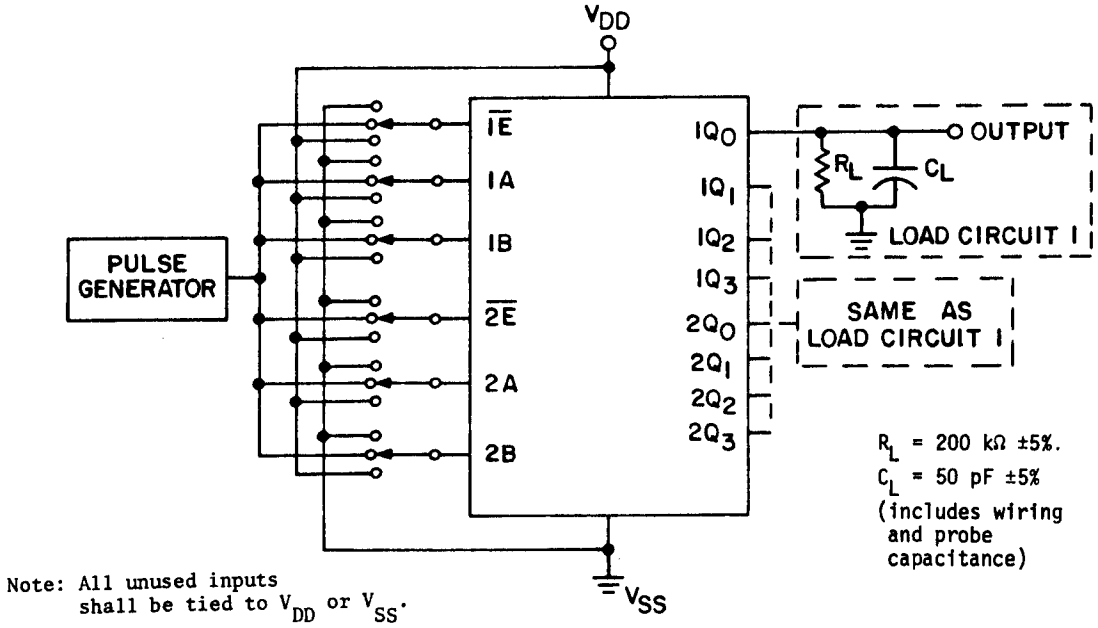

Note: All unused inputs shall be tied to V_{DD} or V_{SS}.

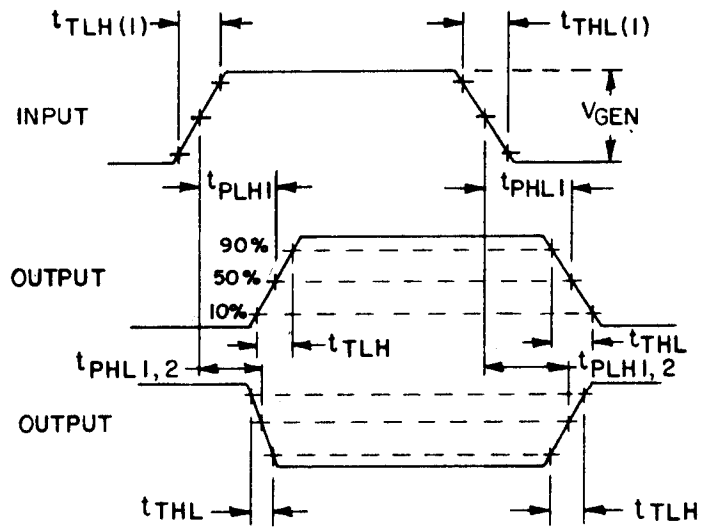

NOTES:
1. The pulse generator has the following characteristics: $V_{GEN} = V_{DD}$ ±1%, t_{PH} = 1.0 ±0.1 µs, $t_{THL(1)}$ and $t_{TLH(1)}$ = 20 ±2 ns and PRR = 1 MHz.
2. See table III for complete terminal conditions.

FIGURE 7. Switching time test circuit and waveforms for device type 04 - Continued.

TABLE III. Group A inspection for device type 01.

Symbol	MIL-STD-883 method	Cases J,K / X, Y, U	Terminal conditions 1/																								Measured terminal	Test limits						Units
			1	2	3	4	5	6	7	8	9	10	11	12	13	14	15	16	17	18	19	20	21	22	23	24		Subgp 1 T_A = 25°C		Subgp 2 T_A = 125°C		Subgp 3 T_A = -55°C		
		Symbol	ST	D1	D2	S7	S6	S5	S4	S3	S1	S2	S0	V_{SS}	S13	S12	S15	S14	S9	S8	S11	S10	D3	D4	I	V_{DD}								
		Test No.																										Min	Max	Min	Max	Min	Max	
V_{IC} (pos)		1	1mA																							GND	ST		1.5					Vdc
		2		1mA																							D1							
		3			1mA																						D2							
		4																					1mA				D3							
		5																						1mA			D4							
		6																							1mA		I							
V_{IC} (neg)		7	-1mA											GND													ST		-6.0					
		8		-1mA																							D1							
		9			-1mA																						D2							
		10																					-1mA				D3							
		11																						-1mA			D4							
		12																							-1mA		I							
I_{SS} 2/	3005	13	18V	GND	GND																		GND	GND	GND	18V	V_{SS}		-.25		-2.5			μA
		14		18V	GND																													
		15		GND	18V																													
		16		18V	18V																													
		17		GND	GND																		18V											
		18		18V	GND																		18V											
		19		GND	18V																		18V											
		20		18V	18V																		18V											
		21		GND	GND																		GND	18V										
		22		18V	GND																													
		23		GND	18V																													
		24		18V	18V																													
		25		GND	GND																		18V											
		26		18V	GND																		18V											
		27		GND	18V																		18V											
		28		18V																														
		29		18V																					18V									
		30		GND																														
		31		18V	GND																													
		32		GND	GND																													
		33		18V	18V																		GND											
		34		GND	18V																													
		35		18V	GND																			18V										
		36		GND	GND																			18V										
		37		18V	18V																		18V	GND										
		38		GND	18V																			GND										
		39		18V	GND																													
		40		GND	GND																													
		41		18V	18V																		GND											
		42		GND	18V																													
		43		18V	GND																													
		44		GND	GND																													
		45	GND	GND	GND																				GND									
		46	GND	18V	18V																		18V	18V										
		47	18V	18V	18V																		18V	18V										
		48	GND	18V	18V																		18V	18V										
		49	GND	GND	GND																		GND	GND										
V_{OH1}	3006	50	15V	GND	GND																		GND	GND		15V	S0	14.95		14.95		14.95		Vdc
		51		15V	GND																						S1							
		52		GND	15V																						S2							
		53		15V	15V																						S3							
		54		GND	GND																		15V				S4							
		55		15V	GND																		15V				S5							

See notes at end of table.

TABLE III. Group A inspection for device type 01 - Continued.

Symbol	MIL-STD-883 method	Cases J,K, X,Y,U	Terminal conditions 1/																							Measured terminal	Test limits						Units
			1	2	3	4	5	6	7	8	9	10	11	12	13	14	15	16	17	18	19	20	21	22	23	24		Subgp 1 T_A = 25°C		Subgp 2 T_A = 125°C		Subgp 3 T_A = -55°C		
		Symbol	ST	D1	D2	S7	S6	S5	S4	S3	S1	S2	S0	V_{SS}	S13	S12	S15	S14	S9	S8	S11	S10	D3	D4	I	V_{DD}		Min	Max	Min	Max	Min	Max	
		Test No.																															
V_{OH1}	3006	56	15V	GND	15V									GND									15V	GND	GND	15V	S6	14.95		14.95		14.95		Vdc
		57		15V	15V																		15V	GND			S7							
		58		GND	GND																		GND	15V			S8							
		59		15V	GND																						S9							
		60		GND	15V																						S10							
		61		15V	15V																						S11							
		62		GND	GND																						S12							
		63		15V	GND																						S13							
		64		GND	15V																						S14							
		65		15V	15V																						S15							
V_{OL1}	3007	66																							15V		S0		0.05		0.05		0.05	
		67																									S1							
		68																									S2							
		69																									S3							
		70																									S4							
		71																									S5							
		72																									S6							
		73																									S7							
		74																									S8							
		75																									S9							
		76																									S10							
		77																									S11							
		78																									S12							
		79																									S13							
		80																									S14							
		81																									S15							
V_{IL1}		82	3/	3/	3/	3/	3/	3/	3/	3/	3/	3/	3/		3/	3/	3/	3/	3/	3/	3/	3/	3/	3/	3/	3/	All Outputs	3/	3/	3/	3/	3/	3/	
V_{IL2}		83																																
V_{IL3}		84																																
V_{IH1}		85																																
V_{IH2}		86																																
V_{IH3}		87																																
I_{OL1}		88	GND	GND	GND	0.4V	0.4V	0.4V	0.4V	0.4V	0.4V	0.4V	0.4V		0.4V	0.4V	0.4V	0.4V	0.4V	0.4V	0.4V	0.4V	GND	GND	5.0V	5.0V	S7	0.51		0.36		0.64		mA
		89																									S6							
		90																									S5							
		91																									S4							
		92																									S3							
		93																									S1							
		94																									S2							
		95																									S0							
		96																									S13							
		97																									S12							
		98																									S15							
		99																									S14							
		100																									S9							
		101																									S8							
		102																									S11							
		103																									S10							

See notes at end of table.

TABLE III. Group A inspection for device type 01 - Continued.

Symbol	MIL-STD-883 method	Cases J,K X,Y,U	1	2	3	4	5	6	7	8	9	10	11	12	13	14	15	16	17	18	19	20	21	22	23	24	Measured terminal	Test limits Subgp 1 T_A = 25°C Min	Subgp 1 Max	Subgp 2 T_A = 125°C Min	Subgp 2 Max	Subgp 3 T_A = -55°C Min	Subgp 3 Max	Unit
		Symbol	ST	D1	D2	S7	S6	S5	S4	S3	S1	S2	S0	V_{DD}	S13	S12	S15	S14	S9	S8	S11	S10	D3	D4	I	V_{DD}								
		Test No.																																
I_{IL2}		104	GND	GND	GND	1.5V	1.5V	1.5V	1.5V	1.5V	1.5V	1.5V	1.5V	GND	1.5V	1.5V	1.5V	1.5V	1.5V	1.5V	1.5V	1.5V	GND	GND	15V	15V	S7	3.4		2.4		4.2		nA
		105																									S6							
		106																									S5							
		107																									S4							
		108																									S3							
		109																									S1							
		110																									S2							
		111																									S0							
		112																									S13							
		113																									S12							
		114																									S15							
		115																									S14							
		116																									S9							
		117																									S8							
		118																									S11							
		119																									S10							
I_{OH1}		120	5V	GND	GND								4.6V												GND	5V	S0	-0.51		-0.36		-0.64		
		121		5V	GND						4.6V																S1							
		122		GND	5V							4.6V															S2							
		123		5V	5V					4.6V																	S3							
		124		GND	GND				4.6V														5V				S4							
		125		5V	GND			4.6V															5V				S5							
		126		GND	5V		4.6V																5V				S6							
		127		5V	5V	4.6V																	GND	5V			S7							
		128		GND	GND															4.6V							S8							
		129		5V	GND														4.6V								S9							
		130		GND	5V																	4.6V					S10							
		131		5V	5V																4.6V						S11							
		132		GND	GND											4.6V											S12							
		133		5V	GND										4.6V								5V				S13							
		134		GND	5V													4.6V									S14							
		135		5V	5V												4.6V										S15							
I_{OH2}		136	15V	GND	GND								13.5V										GND	GND	GND	15V	S0	-3.4		-2.4		-4.2		
		137		15V	GND						13.5V																S1							
		138		GND	15V							13.5V															S2							
		139		15V	15V					13.5V																	S3							
		140		GND	GND				13.5V														15V				S4							
		141		15V	GND			13.5V																			S5							
		142		GND	15V		13.5V																				S6							
		143		15V	15V	13.5V																					S7							
		144		GND	GND															13.5V			GND	15V			S8							
		145		15V	GND														13.5V								S9							
		146		GND	15V																	13.5V					S10							
		147		15V	15V																13.5V						S11							
		148		GND	GND											13.5V							15V				S12							
		149		15V	GND										13.5V												S13							
		150		GND	15V													13.5V									S14							
		151		15V	15V												13.5V										S15							
I_{IH1} 4/	3010	152	18V	18V	18V																		18V	18V	18V	18V	All inputs together		6					nA

See notes at end of table.

TABLE III. Group A inspection for device type 01 - Continued.

Symbol	MIL-STD-883 method	Cases J,K,X,Y,U	Terminal conditions 1/																							Measured terminal	Test limits						Units
			1	2	3	4	5	6	7	8	9	10	11	12	13	14	15	16	17	18	19	20	21	22	23	24		Subgp 1 T_A = 25°C		Subgp 2 T_A = 125°C				
		Symbol	ST	D1	D2	S7	S6	S5	S4	S3	S1	S2	S0	V_{SS}	S13	S12	S15	S14	S9	S8	S11	S10	D3	D4	I	V_{DD}		Min	Max	Min	Max	Min	Max	
		Test No.																															
I_{IH2}	3010	153	18V	GND	GND									GND									GND	GND	GND	18V	ST		1		45			nA
		154	GND	18V	GND																						D1							
		155		GND	18V																						D2							
		156			GND																		18V				D3							
		157																					GND	18V			D4							
		158																					GND	GND	18V		I							
I_{IL1} 4/	3009	159	GND	GND	GND																		GND	GND	GND		All inputs together		-6					
I_{IL2}		160	GND	18V	18V																		18V	18V	18V		ST		-1		-45			
		161	18V	GND	18V																						D1							
		162		18V	GND																						D2							
		163			18V																		GND				D3							
		164																					18V	GND			D4							
		165																					18V	18V	GND		I							
																												Subgp 4 T_A = 25°C						
																												Min	Max					
C_1	3012	166	5/																							GND	ST		7.5					pF
		167		5/																							D1							
		168			5/																						D2							
		169																					5/				D3							
		170																						5/			D4							
		171																							5/		I							
																												Subgp 7 T_A = 25°C		Subgp 8 T_A = 125°C		T_A = -55°C		
																												Min	Max	Min	Max	Min	Max	
TRUTH TABLE TEST	3014	172	5V	GND	GND	L	L	L	L	L	L	L	H		L	L	L	L	L	L	L	L	GND	GND	GND	5V	All outputs	See 6/ 7/						
		173		5V	GND						H	L	L																					
		174		GND	5V						L	H																						
		175		5V	5V					H		L																						
		176		GND	GND				H	L													5V											
		177		5V	GND			H	L																									
		178		GND	5V		H	L																										
		179		5V	5V	H	L																											
		180		GND	GND	L														H			GND	5V										
		181		5V	GND														H	L														
		182		GND	5V														L			H												
		183		5V	5V																H	L												
		184		GND	GND											H					L		5V											
		185		5V	GND											L																		
		186		GND	5V											L			H															
		187		5V														H	L															
		188		5V														L							5V									
		189		GND																														
		190		5V	GND																													
		191		GND	GND																													
		192		5V	5V																		GND											
		193		GND	5V																													
		194		5V	GND																													

See notes at end of table.

TABLE III. Group A inspection for device type 01 - Continued.

Symbol	MIL-STD-883 method	Cases J,K X,Y,U	Terminal conditions 1/ 1	2	3	4	5	6	7	8	9	10	11	12	13	14	15	16	17	18	19	20	21	22	23	24	Measured terminal	Test limits Subgp 7 T_A = 25°C Min	Max	Subgp 8 T_A = 125°C Min	Max	T_A = -55° Min	Max	Units
		Symbol	ST	D1	D2	S7	S6	S5	S4	S3	S1	S2	S0	V_{SS}	S13	S12	S15	S14	S9	S8	S11	S10	D3	D4	I	V_{DD}								
		Test No.																																
TRUTH TABLE TEST	3014	195	5V	GND	GND	L	L	L	L	L	L	L	L	GND	L	L	L	L	L	L	L	L	GND	5V	5V	5V	All outputs	See 6/ 7/						
		196		5V	5V																		5V	GND										
		197		GND	5V																													
		198		5V	GND																													
		199		GND	GND																													
		200		5V	5V																													
		201		GND	5V																													
		202		5V	GND																													
		203		GND																			GND											
		204	GND	GND									H																					
		205	GND	5V	5V								H										5V	5V										
		206	5V										L				H																	
		207	GND																															
		208	GND	GND	GND																		GND	GND										
																												Subgp 9 T_A = 25°C Min	Max	Subgp 10 T_A = 125°C Min	Max	Subgp 11 T_A = -55°C Min	Max	
t_{SETUP} 8/	Fig 7	209	IN	IN	GND																		GND	GND	GND	5V	D1 to S0		150		210		150	ns
		210		IN	GND																						D1 to S1							
		211		GND	IN																						D2 to S2							
		212		IN	5V																						D1 to S3							
		213		GND	GND																						D3 to S4							
		214		5V	GND																						D3 to S5							
		215		GND	5V																						D3 to S6							
		216		5V	5V	OUT	OUT	OUT	OUT	OUT	OUT	OUT											IN	IN			D3 to S7							
		217		GND	GND																						D4 to S8							
		218		5V	GND														OUT	OUT			GND				D4 to S9							
		219		GND	5V																						D4 to S10							
		220		IN	5V																						D1 to S11							
		221		GND	GND																						D3 to S12							
		222		5V	GND										OUT	OUT					OUT	OUT	IN	IN			D3 to S13							
		223		GND	IN													OUT					5V	5V			D2 to S14							
		224		5V	5V												OUT						5V	IN			D4 to S15							
t_{PHL1} & t_{PLH1}	3003 Fig 7	225	5V	IN	GND								OUT										GND	GND			D1 to S0	49	970	68	1360	49	970	
		226		IN	GND																						D1 to S1							
		227		GND	IN																						D2 to S2							
		228		IN	5V																		IN				D1 to S3							
		229		GND	GND																		IN				D3 to S4							
		230		5V	GND																		IN				D3 to S5							
		231		GND	5V																		IN				D3 to S6							
		232		5V	5V	OUT	OUT	OUT	OUT	OUT	OUT	OUT											GND	GND			D3 to S7							
		233		GND	GND														OUT	OUT							D4 to S8							
		234		5V	GND																			IN			D4 to S9							
		235		GND	5V																			IN			D4 to S10							
		236		IN	5V																			IN			D1 to S11							
		237		GND	GND																			5V			D3 to S12							
		238		5V	GND										OUT	OUT					OUT	OUT	IN	5V			D3 to S13							
		239		GND	IN													OUT						5V			D2 to S14							
		240		5V	5V												OUT							IN			D4 to S15							

See notes at end of table.

TABLE III. Group A inspection for device type 01 - Continued.

Symbol	MIL-STD-883 method	Cases J, K / X,Y,U	Terminal conditions 1/ 1	2	3	4	5	6	7	8	9	10	11	12	13	14	15	16	17	18	19	20	21	22	23	24	Measured terminal	Test limits Subgp 9 T_A = 25°C Min	Subgp 9 Max	Subgp 10 T_A = 125°C Min	Subgp 10 Max	Subgp 11 T_A = -55° Min	Subgp 11 Max	Units
		Symbol	ST	D1	D2	S7	S6	S5	S4	S3	S1	S2	S0	V_{SS}	S13	S12	S15	S14	S9	S8	S11	S10	D3	D4	I	V_{DD}								
		Test No.																																
t_{PHL2} & t_{PLH2}	3003 Fig 7	241	5V	GND	GND								OUT	GND									GND	GND	IN	5V	I to S0	25	500	35	700	25	500	ns
		242		5V	GND						OUT	OUT															I to S1							
		243		GND	5V					OUT																	I to S2							
		244		5V	5V																		5V				I to S3							
		245		GND	GND				OUT																		I to S4							
		246		5V	GND			OUT																			I to S5							
		247		GND	5V		OUT																	GND			I to S6							
		248		5V	5V	OUT														OUT				5V			I to S7							
		249		GND	GND														OUT				GND				I to S8							
		250		5V	GND																OUT	OUT					I to S9							
		251		GND	5V																						I to S10							
		252		5V	5V																						I to S11							
		253		GND	GND											OUT							5V				I to S12							
		254		5V	GND										OUT												I to S13							
		255		GND	5V													OUT									I to S14							
		256		5V	5V												OUT										I to S15							
t_{THL} & t_{TLH}	3004 Fig 7	257		IN	GND								OUT										GND	GND	GND		S0	10	200	14	280	10	200	
		258		IN	GND						OUT																S1							
		259		GND	IN							OUT															S2							
		260		IN	5V					OUT																	S3							
		261		GND	GND				OUT														IN				S4							
		262		5V	GND			OUT																			S5							
		263		GND	5V		OUT																				S6							
		264		5V	5V	OUT																					S7							
		265		GND	GND																		GND				S8							
		266		5V	GND															OUT				IN			S9							
		267		GND	5V																						S10							
		268		IN	5V																	OUT					S11							
		269		GND	GND											OUT					OUT		IN				S12							
		270		5V	GND										OUT								IN				S13							
		271		GND	IN													OUT					5V				S14							
		272		5V	5V												OUT						5V	IN			S15	10	200	14	280	10	200	
																												Subgp 12 T_A = 25°C Min	Max					
t_{PLH1} & t_{PHL1}	3003 Fig 7	273	10.0	IN	GND								OUT	GND									GND	GND	GND	10.0V	D1 to S0	19	370					
		274		IN	GND						OUT																D1 to S1							
		275		GND	IN							OUT															D2 to S2							
		276		IN	10.0					OUT													IN				D1 to S3							
		277		GND	GND				OUT																		D3 to S4							
		278		10.0	GND			OUT																			D3 to S5							
		279		GND	10.0		OUT																				D3 to S6							
		280		10.0	10.0	OUT																					D3 to S7							
		281		GND	GND															OUT			10.0	IN			D4 to S8							
		282		10.0	GND														OUT				GND	IN			D4 to S9							
		283		GND	10.0																	OUT					D4 to S10							
		284		IN	10.0																			10.0			D1 to S11							
		285		GND	GND											OUT							IN				D3 to S12							
		286		10.0	GND										OUT								IN				D3 to S13							
		287		GND	IN													OUT					10.0				D2 to S14							
		288		10.0	10.0												OUT						10.0	IN			D4 to S15							

See notes at end of table.

TABLE III. Group A inspection for device type 01 - Continued.

Symbol	MIL-STD-883 method	Cases J,K, X,Y,U	Terminal conditions 1/ 1	2	3	4	5	6	7	8	9	10	11	12	13	14	15	16	17	18	19	20	21	22	23	24	Measured terminal	Test limits Subgp 12 T_A = 25°C Min	Max	Min	Max	Min	Max	Units
		Symbol	ST	D1	D2	S7	S6	S5	S4	S3	S1	S2	S0	V_{SS}	S13	S12	S15	S14	S9	S8	S11	S10	D3	D4	I	V_{DD}								
		Test No.																																
t_{PHL2} & t_{PLH2}	3003 Fig 7	289	10.0	10.0	GND								OUT	GND									GND	GND	IN	10.0V	I to S0	11	220					ns
		290		10.0	GND						OUT																I to S1							
		291		GND	10.0							OUT															I to S2							
		292		10.0	10.0					OUT																	I to S3							
		293		GND	GND				OUT														10.0				I to S4							
		294		10.0	GND			OUT																			I to S5							
		295		GND	10.0		OUT																				I to S6							
		296		10.0	10.0	OUT																	GND	10.0			I to S7							
		297		GND	GND															OUT							I to S8							
		298		10.0	GND																						I to S9							
		299		GND	10.0																	OUT					I to S10							
		300		10.0	10.0																						I to S11							
		301		GND	GND																		10.0				I to S12							
		302		10.0	GND											OUT											I to S13							
		303		GND	10.0																						I to S14							
		304		10.0	10.0												OUT										I to S15							
t_{THL} & t_{TLH}	3004 Fig 7	305		IN	GND								OUT										GND	GND	GND		S0	5	100					
		306		IN	GND						OUT																S1							
		307		GND	IN							OUT															S2							
		308		IN	10.0					OUT																	S3							
		309		GND	GND				OUT														IN				S4							
		310		10.0	GND			OUT																			S5							
		311		GND	10.0		OUT																				S6							
		312		10.0	10.0	OUT																	GND	IN			S7							
		313		GND	GND															OUT				IN			S8							
		314		10.0	GND																			IN			S9							
		315		GND	10.0																	OUT		IN			S10							
		316		IN	10.0																			10.0			S11							
		317		GND	GND											OUT							IN				S12							
		318		10.0	GND																		IN				S13							
		319		GND	IN													OUT					10.0				S14							
		320		10.0	10.0																		10.0	IN			S15							

See notes at end of table.

1/ Pins not designated may be High level logic, Low level logic or open. Exceptions are as follows: $V_{IC(pos)}$ tests, the V_{SS} terminal shall be open; $V_{IC(neg)}$ tests, the V_{DD} terminal shall be open; I_{SS} tests, the output terminals shall be open.

2/ The I_{SS} measurements shall be performed in sequence.

3/ The following timing sequence and input/output conditions shall apply. These tests require only a summary of attributes data.

	TIME SLOT	0	1	2	3	4	5	6	7	8	9	10	11	12	13	14	15	16	17	18	19	20	21	22	23	24	25	26	27	28	29	30	31	32*	33	34	35	36
INPUTS	ST	1	1	1	1	1	1	1	1	1	1	1	1	1	1	1	1	1	1	1	1	1	1	1	1	1	1	1	1	1	1	1	1	0	0	1	0	0
	INH	0	0	0	0	0	0	0	0	0	0	0	0	0	0	0	0	1	1	1	1	1	1	1	1	1	1	1	1	1	1	1	1	0	0	0	0	0
	D1	0	1	0	1	0	1	0	1	0	1	0	1	0	1	0	1	1	0	1	0	1	0	1	0	1	0	1	0	1	0	1	0	0	1	1	1	0
	D2	0	0	1	1	0	0	1	1	0	0	1	1	0	0	1	1	1	1	0	0	1	1	0	0	1	1	0	0	1	1	0	0	0	1	1	1	0
	D3	0	0	0	0	1	1	1	1	0	0	0	0	1	1	1	1	1	1	1	1	0	0	0	0	1	1	1	1	0	0	0	0	0	1	1	1	0
	D4	0	0	0	0	0	0	0	0	1	1	1	1	1	1	1	1	1	1	1	1	1	1	1	1	0	0	0	0	0	0	0	0	0	1	1	1	0
OUTPUTS	S0	1	0	0	0	0	0	0	0	0	0	0	0	0	0	0	0	0	0	0	0	0	0	0	0	0	0	0	0	0	0	0	0	1	1	0	0	0
	S1	0	1	0	0	0	0	0	0	0	0	0	0	0	0	0	0	0	0	0	0	0	0	0	0	0	0	0	0	0	0	0	0	0	0	0	0	0
	S2	0	0	1	0	0	0	0	0	0	0	0	0	0	0	0	0	0	0	0	0	0	0	0	0	0	0	0	0	0	0	0	0	0	0	0	0	0
	S3	0	0	0	1	0	0	0	0	0	0	0	0	0	0	0	0	0	0	0	0	0	0	0	0	0	0	0	0	0	0	0	0	0	0	0	0	0
	S4	0	0	0	0	1	0	0	0	0	0	0	0	0	0	0	0	0	0	0	0	0	0	0	0	0	0	0	0	0	0	0	0	0	0	0	0	0
	S5	0	0	0	0	0	1	0	0	0	0	0	0	0	0	0	0	0	0	0	0	0	0	0	0	0	0	0	0	0	0	0	0	0	0	0	0	0
	S6	0	0	0	0	0	0	1	0	0	0	0	0	0	0	0	0	0	0	0	0	0	0	0	0	0	0	0	0	0	0	0	0	0	0	0	0	0
	S7	0	0	0	0	0	0	0	1	0	0	0	0	0	0	0	0	0	0	0	0	0	0	0	0	0	0	0	0	0	0	0	0	0	0	0	0	0
	S8	0	0	0	0	0	0	0	0	1	0	0	0	0	0	0	0	0	0	0	0	0	0	0	0	0	0	0	0	0	0	0	0	0	0	0	0	0
	S9	0	0	0	0	0	0	0	0	0	1	0	0	0	0	0	0	0	0	0	0	0	0	0	0	0	0	0	0	0	0	0	0	0	0	0	0	0
	S10	0	0	0	0	0	0	0	0	0	0	1	0	0	0	0	0	0	0	0	0	0	0	0	0	0	0	0	0	0	0	0	0	0	0	0	0	0
	S11	0	0	0	0	0	0	0	0	0	0	0	1	0	0	0	0	0	0	0	0	0	0	0	0	0	0	0	0	0	0	0	0	0	0	0	0	0
	S12	0	0	0	0	0	0	0	0	0	0	0	0	1	0	0	0	0	0	0	0	0	0	0	0	0	0	0	0	0	0	0	0	0	0	0	0	0
	S13	0	0	0	0	0	0	0	0	0	0	0	0	0	1	0	0	0	0	0	0	0	0	0	0	0	0	0	0	0	0	0	0	0	0	0	0	0
	S14	0	0	0	0	0	0	0	0	0	0	0	0	0	0	1	0	0	0	0	0	0	0	0	0	0	0	0	0	0	0	0	0	0	0	0	0	0
	S15	0	0	0	0	0	0	0	0	0	0	0	0	0	0	0	1	0	0	0	0	0	0	0	0	0	0	0	0	0	0	0	0	0	0	1	1	1

* TIME SLOT 32 and Outputs S0: Inhibit shall go from 1 to 0 level before the strobe input goes from 1 to 0.

Input/output conditions

Test	V_{DD}	Input levels		Output levels	
		1	0	1	0
	Volts			Min	Max
V_{IH1} V_{IL1}	5.0	3.5V	1.5V	4.5V	0.5V
V_{IH2} V_{IL2}	10.0	7.0V	3.0V	9.0V	1.0V
V_{IH3} V_{IL3}	15.0	11.0V	4.0V	13.5V	1.5V

4/ The device manufacturer may, at his option, measure I_{IL} and I_{IH} at 25°C for each individual input or measure all inputs together.

5/ See 4.4.1c.

6/ The Truth Table Tests shall be performed in sequence.

7/ The Truth Table Tests shall be performed at V_{IH} and $V_{DD} \leq 5$ Vdc and ≥ 18 Vdc. $L = V_{SS} + 0.50$ V maximum and $H = V_{DD} - 0.50$ V minimum.

8/ t_{SETUP} may be performed concurrently with t_{PLH} and t_{PHL}, using the maximum allowed test t_{SETUP}.

TABLE III. Group A inspection for device type 02.

Symbol	MIL-STD-883 method	Cases J,K,X,Y,U	Terminal conditions 1/ 1	2	3	4	5	6	7	8	9	10	11	12	13	14	15	16	17	18	19	20	21	22	23	24	Measured terminal	Test limits Subgp 1 T_A = 25°C Min	Subgp 1 Max	Subgp 2 T_A = 125°C Min	Subgp 2 Max	Subgp 3 T_A = -55°C Min	Subgp 3 Max	Units
		Symbol	ST	D1	D2	S7	S6	S5	S4	S3	S1	S2	S0	V_{SS}	S13	S12	S15	S14	S9	S8	S11	S10	D3	D4	I	V_{DD}								
		Test No.																																
V_{IC} (pos)		1	1mA																							GND	ST		1.5					Vdc
		2		1mA																							D1							
		3			1mA																						D2							
		4																					1mA				D3							
		5																						1mA			D4							
		6																							1mA		I							
V_{IC} (neg)		7	-1mA											GND													ST		-6					
		8		-1mA																							D1							
		9			-1mA																						D2							
		10																					-1mA				D3							
		11																						-1mA			D4							
		12																							-1mA		I							
I_{SS} 2/	3005	13	18V	GND	GND																		GND	GND	GND	18V	V_{SS}		-.25		-2.5			μA
		14		18V	GND																													
		15		GND	18V																													
		16		18V	18V																		18V											
		17		GND	GND																													
		18		18V	GND																													
		19		GND	18V																													
		20		18V	18V																													
		21		GND	GND																		GND	18V										
		22		18V	GND																													
		23		GND	18V																													
		24		18V	18V																		18V											
		25		GND	GND																													
		26		18V	GND																													
		27		GND	18V																													
		28		18V	18V																													
		29		18V	18V																				18V									
		30		GND	18V																													
		31		18V	GND																													
		32		GND	GND																													
		33		18V	18V																		GND											
		34		GND	18V																													
		35		18V	GND																													
		36		GND	GND																													
		37		18V	18V																		18V	GND										
		38		GND	18V																													
		39		18V	GND																													
		40		GND	GND																													
		41		18V	18V																		GND											
		42		GND	18V																													
		43		18V	GND																													
		44		GND	GND																				GND									
		45	GND	GND	GND																		18V	18V										
		46	GND	18V	18V																													
		47	18V	18V	18V																													
		48	GND	18V	18V																													
		49	GND	GND	GND																		GND	GND										

See notes at end of device type.

TABLE III. Group A inspection for device type 02 - Continued.

Symbol	MIL-STD-883 method	Cases J,K,X,Y,U	Terminal conditions 1/																							Measured terminal	Test limits Subgp 1 T_A = 25°C		Subgp 2 T_A = 125°C		Subgp 3 T_A = -55°C		Units
			1	2	3	4	5	6	7	8	9	10	11	12	13	14	15	16	17	18	19	20	21	22	23	24							
		Symbol	ST	D1	D2	S7	S6	S5	S4	S3	S1	S2	S0	V_{SS}	S13	S12	S15	S14	S9	S8	S11	S10	D3	D4	I	V_{DD}							
		Test No.																										Min	Max	Min	Max	Min	Max	
V_{OL1}	3007	50	15V	GND	GND									GND									GND	GND	GND	15V	S0		0.05		0.05		0.05	Vdc
		51		15V	GND																						S1							
		52		GND	15V																						S2							
		53		15V	15V																						S3							
		54		GND	GND																		15V				S4							
		55		15V	GND																						S5							
		56		GND	15V																						S6							
		57		15V	15V																						S7							
		58		GND	GND																		GND	15V			S8							
		59		15V	GND																						S9							
		60		GND	15V																						S10							
		61		15V	15V																						S11							
		62		GND	GND																		15V				S12							
		63		15V	GND																						S13							
		64		GND	15V																						S14							
		65		15V	15V																						S15							
V_{OH1}	3006	66																							15V		S0	14.95		14.95		14.95		
		67																									S1							
		68																									S2							
		69																									S3							
		70																									S4							
		71																									S5							
		72																									S6							
		73																									S7							
		74																									S8							
		75																									S9							
		76																									S10							
		77																									S11							
		78																									S12							
		79																									S13							
		80																									S14							
		81																									S15							
V_{IL1}		82	3/	3/	3/	3/	3/	3/	3/	3/	3/	3/	3/		3/	3/	3/	3/	3/	3/	3/	3/	3/	3/	3/	3/	All outputs	3/	3/	3/	3/	3/	3/	
V_{IL2}		83																																
V_{IL3}		84																																
V_{IH1}		85																																
V_{IH2}		86																																
V_{IH3}		87																																
I_{OL1}		88	5V	GND	GND								0.4V										GND	GND	GND	5V	S0	0.51		0.36		0.64		mA
		89		5V	GND						0.4V																S1							
		90		GND	5V							0.4V															S2							
		91		5V	5V					0.4V																	S3							
		92		GND	GND				0.4V														5V				S4							
		93		5V	GND			0.4V																			S5							
		94		GND	5V		0.4V																				S6							
		95		5V	5V	0.4V																					S7							
		96		GND	GND															0.4V			GND	5V			S8							
		97		5V	GND														0.4V								S9							
		98		GND	5V																	0.4V					S10							
		99		5V	5V																0.4V						S11							
		100		GND	GND											0.4V							5V				S12							
		101		5V	GND										0.4V												S13							
		102		GND	5V													0.4V									S14							
		103		5V	5V												0.4V										S15							

See notes at end of device type.

TABLE III. Group A inspection for device type 02 - Continued.

Symbol	MIL-STD-883 method	Cases J, K, X,Y,U	Terminal conditions 1/ 1	2	3	4	5	6	7	8	9	10	11	12	13	14	15	16	17	18	19	20	21	22	23	24	Measured terminal	Test limits Subgp 1 T_A = 25°C Min	Subgp 1 Max	Subgp 2 T_A = 125°C Min	Subgp 2 Max	Subgp 3 T_A = -55°C Min	Subgp 3 Max	Units
		Symbol	ST	D1	D2	S7	S6	S5	S4	S3	S1	S2	S0	V_{SS}	S13	S12	S15	S14	S9	S8	S11	S10	D3	D4	I	V_{DD}								
		Test No.																																
I_{OL2}		104	15V	GND	GND								1.5V	GND									GND	GND	GND	15V	S0	3.4		2.4		4.2		mA
		105		15V	GND						1.5V																S1							
		106		GND	15V							1.5V															S2							
		107		15V	15V					1.5V																	S3							
		108		GND	GND				1.5V														5V				S4							
		109		15V	GND			1.5V																			S5							
		110		GND	15V		1.5V																				S6							
		111		15V	15V	1.5V																		5V			S7							
		112		GND	GND																		GND				S8							
		113		15V	GND														1.5V	1.5V							S9							
		114		GND	15V																	1.5V					S10							
		115		15V	15V																1.5V						S11							
		116		GND	GND											1.5V							5V				S12							
		117		15V	GND										1.5V												S13							
		118		GND	15V													1.5V									S14							
		119		15V	15V												1.5V										S15							
I_{OH1}		120	GND	GND	GND	4.6V																	GND	GND	5V	5.0V	S7	-0.51		-0.36		-0.64		
		121					4.6V																				S6							
		122						4.6V																			S5							
		123							4.6V																		S4							
		124								4.6V																	S3							
		125									4.6V																S1							
		126										4.6V															S2							
		127											4.6V														S0							
		128													4.6V												S13							
		129														4.6V											S12							
		130															4.6V										S15							
		131																4.6V									S14							
		132																	4.6V								S9							
		133																		4.6V							S8							
		134																			4.6V						S11							
		135																				4.6V					S10							
I_{OH2}		136				13.5V																			15V	15V	S7	-3.4		-2.4		-4.2		
		137					13.5V																				S6							
		138						13.5V																			S5							
		139							13.5V																		S4							
		140								13.5V																	S3							
		141									13.5V																S1							
		142										13.5V															S2							
		143											13.5V														S0							
		144													13.5V												S13							
		145														13.5V											S12							
		146															13.5V										S15							
		147																13.5V									S14							
		148																	13.5V								S9							
		149																		13.5V							S8							
		150																			13.5V						S11							
		151																				13.5V					S10							
I_{IH1} 4/	3010	152	18V	18V	18V																		18V	18V	18V	18V	All inputs together		6					nA
I_{IH2}	3010	153	18V	GND	GND																		GND	GND	GND	18V	ST		1		45			
		154	GND	18V	GND																						D1							
		155		GND	18V																		18V				D2							
		156			GND																		GND	18V			D3							
		157																					GND	GND	18V		D4							
		158																									I							

See notes at end of device type.

TABLE III. Group A inspection for device type 02 - Continued.

Symbol	MIL-STD-883 method	Cases J, K, X,Y,U	Terminal conditions 1/ 1	2	3	4	5	6	7	8	9	10	11	12	13	14	15	16	17	18	19	20	21	22	23	24	Measured terminal	Test limits Subgp 1 T_A = 25°C Min	Subgp 1 Max	Subgp 2 T_A = 125°C Min	Subgp 2 Max	Subgp 3 T_A = -55°C Min	Subgp 3 Max	Units
		Symbol	ST	D1	D2	S7	S6	S5	S4	S3	S1	S2	S0	V_{SS}	S13	S12	S15	S14	S9	S8	S11	S10	D3	D4	I	V_{DD}								
		Test No.																																
I_{IL1} 4/	3009	159	GND	GND	GND									GND									GND	GND	GND	18V	All inputs together		-6					nA
I_{IL2}	3009	160 161 162 163 164 165	GND 18V	18V GND 18V	18V 18V GND 18V																		18V GND 18V 18V	18V GND 18V	18V GND		ST D1 D2 D3 D4 I		-1		-45			
																												Subgp 4 T_A = 25°C Min	Max					
C_1	3012	166 167 168 169 170 171	5/	5/	5/									GND									5/	5/	5/	GND	ST D1 D2 D3 D4 I		7.5					pF
																												Subgp 7 T_A = 25°C Min	Max	Subgp 8 T_A = 125°C Min	Max	Subgp 8 T_A = -55°C Min	Max	
TRUTH TABLE TEST	3014	172 173 174 175 176 177 178 179 180 181 182 183 184 185 186 187 188 189 190 191 192 193 194 195 196 197 198 199 200 201 202 203	5V	GND 5V GND 5V GND 5V GND 5V GND 5V GND 5V GND 5V GND 5V 5V GND 5V GND 5V GND 5V GND 5V GND 5V GND 5V GND 5V GND 5V GND	GND GND 5V 5V GND GND 5V 5V GND GND 5V 5V GND 5V GND 5V GND GND 5V 5V GND GND 5V 5V GND GND 5V 5V GND GND 5V 5V GND GND	H	H	H	H	H H H L H H	H L H	H H L H	L H	GND	H	H	H	H	H	H	H	H	GND 5V GND 5V GND 5V GND 5V GND 5V GND 5V GND 5V GND 5V GND 5V GND 5V GND 5V GND 5V GND 5V GND 5V GND 5V GND 5V GND 5V GND	GND 5V GND 5V GND 5V GND 5V GND 5V GND 5V GND 5V GND 5V GND 5V GND 5V GND 5V GND 5V GND 5V GND 5V GND 5V GND 5V GND 5V GND	GND 5V	5V	All outputs	See 6/ 7/						

See notes at end of device type.

TABLE III. Group A inspection for device type 02 - Continued.

Symbol	MIL-STD-883 method	Cases J, K, X, Y, U	Terminal conditions 1/																							Measured terminal	Test limits						Units
			1	2	3	4	5	6	7	8	9	10	11	12	13	14	15	16	17	18	19	20	21	22	23	24		Subgp 7 T_A = 25°C		Subgp 8 T_A = 125°C		Subgp 8 T_A = -55°C		
		Symbol	ST	D1	D2	S7	S6	S5	S4	S3	S1	S2	S0	V_{SS}	S13	S12	S15	S14	S9	S8	S11	S10	D3	D4	I	V_{DD}								
		Test No.																										Min	Max	Min	Max	Min	Max	
TRUTH TABLE TEST	3014	204	GND	GND	GND	H	H	H	H	H	H	H	L	GND	H	H	H	H	H	H	H	H	GND	GND	GND		All outputs	See 6/ 7/						
		205	GND	5V	5V								L										5V	5V										
		206	5V	5V	5V								H				L						5V	5V										
		207	GND	5V	5V								H				L						5V	5V										
		208	GND	GND	GND								H				L						GND	GND										
																												Subgp 9 T_A = 25°C		Subgp 10 T_A = 125°C		Subgp 11 T_A = -55°C		
																												Min	Max	Min	Max	Min	Max	
t_{SETUP} 8/	Fig 7	209	IN	IN	GND						OUT		OUT	GND									GND	GND	GND	5V	D1 to S0		150		210		150	ns
		210		IN	GND																						D1 to S1							
		211		GND	IN							OUT															D2 to S2							
		212		IN	5V					OUT																	D1 to S3							
		213		GND	GND																		IN				D3 to S4							
		214		5V	GND				OUT																		D3 to S5							
		215		GND	5V			OUT																			D3 to S6							
		216		5V	5V	OUT																					D3 to S7							
		217		GND	GND															OUT			GND	IN			D4 to S8							
		218		5V	GND																			IN			D4 to S9							
		219		GND	5V																			IN			D4 to S10							
		220		IN	5V																OUT			5V			D1 to S11							
		221		GND	GND																		IN				D3 to S12							
		222		5V	GND										OUT								IN				D3 to S13							
		223		GND	IN													OUT					5V				D2 to S14							
		224		5V	5V												OUT						5V	IN			D4 to S15							
t_{PHL1} & t_{PLH1}	3009 Fig 7	225	5V	IN	GND								OUT										GND	GND			D1 to S0	49	970	68	1360	49	970	
		226		IN	GND						OUT																D1 to S1							
		227		GND	IN							OUT															D2 to S2							
		228		IN	5V					OUT																	D1 to S3							
		229		GND	GND				OUT														IN				D3 to S4							
		230		5V	GND			OUT																			D3 to S5							
		231		GND	5V		OUT																				D3 to S6							
		232		5V	5V	OUT																					D3 to S7							
		233		GND	GND															OUT			GND	IN			D4 to S8							
		234		5V	GND																			IN			D4 to S9							
		235		GND	5V																			IN			D4 to S10							
		236		IN	5V																OUT			5V			D1 to S11							
		237		GND	GND											OUT							IN				D3 to S12							
		238		5V	GND										OUT								IN				D3 to S13							
		239		GND	IN													OUT					5V				D2 to S14							
		240		5V	5V												OUT						5V	IN			D4 to S15							
t_{PHL2} & t_{PLH2}	3003 Fig 7	241		5V	GND								OUT										GND	GND	IN		I to S0	25	500	35	700	25	500	
		242		5V	GND						OUT																i to S1							
		243		GND	5V							OUT															I to S2							
		244		5V	5V					OUT																	I to S3							
		245		GND	GND				OUT														5V				I to S4							
		246		5V	GND			OUT																			I to S5							
		247		GND	5V		OUT																				I to S6							
		248		5V	5V	OUT																					I to S7							
		249		GND	GND															OUT			GND	5V			I to S8							
		250		5V	GND																						I to S9							
		251		GND	5V																						I to S10							
		252		5V	5V																OUT						I to S11							
		253		GND	GND											OUT							5V				I to S12							
		254		5V	GND										OUT												I to S13							
		255		GND	5V													OUT									I to S14							
		256		5V	5V												OUT										I to S15							

See notes at end of device type.

TABLE III. Group A inspection for device type 02 - Continued.

Symbol	MIL-STD-883 method	Cases J, K, X, Y, U	Terminal conditions 1/ 1	2	3	4	5	6	7	8	9	10	11	12	13	14	15	16	17	18	19	20	21	22	23	24	Measured terminal	Test limits Subgp 9 T_A = 25°C Min	Subgp 9 Max	Subgp 10 T_A = 125°C Min	Subgp 10 Max	Subgp 11 T_A = -55°C Min	Subgp 11 Max	Units
		Symbol	ST	D1	D2	S7	S6	S5	S4	S3	S1	S2	S0	V_{SS}	S13	S12	S15	S14	S9	S8	S11	S10	D3	D4	I	V_{DD}								
		Test No.																																
t_{THL} & t_{TLH}	3004 Fig 7	257	5V	IN	GND								OUT	GND									GND	GND	GND	5V	S0	10	200	14	280	10	200	ns
		258		IN	GND						OUT																S1							
		259		GND	IN							OUT															S2							
		260		IN	5V					OUT																	S3							
		261		GND	GND				OUT														IN				S4							
		262		5V	GND			OUT															IN				S5							
		263		GND	5V		OUT																IN				S6							
		264		5V	5V	OUT																	IN	GND			S7							
		265		GND	GND																		GND	IN			S8							
		266		5V	GND														OUT	OUT							S9							
		267		GND	5V																						S10							
		268		IN	5V																OUT			5V			S11							
		269		GND	GND											OUT											S12							
		270		5V	GND										OUT								IN				S13							
		271		GND	IN													OUT					IN				S14							
		272		5V	5V												OUT						5V	IN			S15							
																												Subgp 12 T_A = 25°C Min	Max					
t_{PHL1} & t_{PLH1}	3003 Fig 7	273	10.0	IN	GND								OUT	GND									GND	GND	GND	10.0V	D1 to S0	19	370					
		274		IN	GND						OUT																D1 to S1							
		275		GND	IN							OUT															D2 to S2							
		276		IN	10.0					OUT																	D1 to S3							
		277		GND	GND				OUT														IN				D3 to S4							
		278		10.0	GND			OUT															IN				D3 to S5							
		279		GND	10.0		OUT																IN				D3 to S6							
		280		10.0	10.0	OUT																	IN				D3 to S7							
		281		GND	GND																		GND	IN			D4 to S8							
		282		10.0	GND														OUT	OUT				IN			D4 to S9							
		283		GND	10.0																	OUT					D4 to S10							
		284		IN	10.0																			10.0			D1 to S11							
		285		GND	GND											OUT							IN				D3 to S12							
		286		10.0	GND										OUT								IN				D3 to S13							
		287		GND	IN													OUT					10.0				D2 to S14							
		288		10.0	10.0												OUT						10.0	IN			D4 to S15							
t_{PHL2} & t_{PLH2}		289		10.0	GND								OUT										GND	GND	IN		I to S0	11	220					
		290		10.0	GND						OUT																I to S1							
		291		GND	10.0							OUT															I to S2							
		292		10.0	10.0					OUT																	I to S3							
		293		GND	GND				OUT														10.0				I to S4							
		294		10.0	GND			OUT																			I to S5							
		295		GND	10.0		OUT																				I to S6							
		296		10.0	10.0	OUT																	GND	10.0			I to S7							
		297		GND	GND														OUT	OUT							I to S8							
		298		10.0	GND																						I to S9							
		299		GND	10.0																	OUT					I to S10							
		300		10.0	10.0																OUT						I to S11							
		301		GND	GND											OUT							10.0				I to S12							
		302		10.0	GND										OUT												I to S13							
		303		GND	10.0													OUT									I to S14							
		304		10.0	10.0												OUT										I to S15							

See notes at end of device type.

TABLE III. Group A inspection for device type 02 - Continued.

Symbol	MIL-STD-883 method	Cases J, K, X_A, Y_A, U	Terminal conditions 1/ 1	2	3	4	5	6	7	8	9	10	11	12	13	14	15	16	17	18	19	20	21	22	23	24	Measured terminal	Test limits Subgp 12 T_A = 25°C Min	Max	Min	Max	Min	Max	Units
		Symbol	ST	D1	D2	S7	S6	S5	S4	S3	S1	S2	S0	V_{SS}	S13	S12	S15	S14	S9	S8	S11	S10	D3	D4	I	V_{DD}								
		Test No.																																
t_{THL} & t_{TLH}	3004 Fig 7	305	10.0	IN	GND								OUT	GND									GND	GND	GND	10.0	S0	5	100					ns
		306		IN	GND						OUT																S1							
		307		GND	IN					OUT		OUT															S2							
		308		IN	10.0				OUT														IN				S3							
		309		GND	GND			OUT															IN				S4							
		310		10.0	GND																		IN				S5							
		311		GND	10.0	OUT	OUT																GND	IN			S6							
		312		10.0	10.0														OUT								S7							
		313		GND	GND															OUT							S8							
		314		10.0	GND																		IN				S9							
		315		GND	10.0																		IN	10.0			S10							
		316		IN	10.0																OUT						S11							
		317		GND	GND											OUT							IN				S12							
		318		10.0	GND																		IN				S13							
		319		GND	IN										OUT								10.0				S14							
		320		10.0	10.0												OUT						10.0	IN			S15							

1/ Pins not designated may be High level logic, Low level logic or open. Exceptions are as follows: $V_{IC(pos)}$ tests, the V_{SS} terminal shall be open; $V_{IC(neg)}$ tests, the V_{DD} terminal shall be open; I_{SS} tests, the output terminal shall be open.

2/ The I_{SS} measurements shall be performed in sequence.

3/ The following timing sequence and input/output conditions shall apply: These tests require only a summary of attributes data.

	TIME SLOT	0	1	2	3	4	5	6	7	8	9	10	11	12	13	14	15	16	17	18	19	20	21	22	23	24	25	26	27	28	29	30	31	32*	33	34	35	36
INPUTS	ST	1	1	1	1	1	1	1	1	1	1	1	1	1	1	1	1	1	1	1	1	1	1	1	1	1	1	1	1	1	1	1	1	0	0	1	0	0
	INH	0	0	0	0	0	0	0	0	0	0	0	0	0	0	0	1	1	1	1	1	1	1	1	1	1	1	1	1	1	1	1	1	0	0	0	0	0
	D1	0	1	0	1	0	1	0	1	0	1	0	1	0	1	0	1	0	1	0	1	0	1	0	1	0	1	0	1	0	1	0	1	0	1	1	1	0
	D2	0	0	1	1	0	0	1	1	0	0	1	1	0	0	1	1	0	0	1	1	0	0	1	1	0	0	1	1	0	0	1	1	0	0	1	1	0
	D3	0	0	0	0	1	1	1	1	0	0	0	0	1	1	1	1	1	1	1	1	0	0	0	0	1	1	1	1	0	0	0	0	0	1	1	1	0
	D4	0	0	0	0	0	0	0	0	1	1	1	1	1	1	1	1	1	1	1	1	1	0	0	0	0	0	0	0	0	0	0	0	0	1	1	1	0
OUTPUTS	S0	0	1	1	1	1	1	1	1	1	1	1	1	1	1	1	1	1	1	1	1	1	1	1	1	1	1	1	1	1	1	1	1	0	0	1	1	1
	S1	1	0	1	1	1	1	1	1	1	1	1	1	1	1	1	1	1	1	1	1	1	1	1	1	1	1	1	1	1	1	1	1	1	1	1	1	1
	S2	1	1	0	1	1	1	1	1	1	1	1	1	1	1	1	1	1	1	1	1	1	1	1	1	1	1	1	1	1	1	1	1	1	1	1	1	1
	S3	1	1	1	0	1	1	1	1	1	1	1	1	1	1	1	1	1	1	1	1	1	1	1	1	1	1	1	1	1	1	1	1	1	1	1	1	1
	S4	1	1	1	1	0	1	1	1	1	1	1	1	1	1	1	1	1	1	1	1	1	1	1	1	1	1	1	1	1	1	1	1	1	1	1	1	1
	S5	1	1	1	1	1	0	1	1	1	1	1	1	1	1	1	1	1	1	1	1	1	1	1	1	1	1	1	1	1	1	1	1	1	1	1	1	1
	S6	1	1	1	1	1	1	0	1	1	1	1	1	1	1	1	1	1	1	1	1	1	1	1	1	1	1	1	1	1	1	1	1	1	1	1	1	1
	S7	1	1	1	1	1	1	1	0	1	1	1	1	1	1	1	1	1	1	1	1	1	1	1	1	1	1	1	1	1	1	1	1	1	1	1	1	1
	S8	1	1	1	1	1	1	1	1	0	1	1	1	1	1	1	1	1	1	1	1	1	1	1	1	1	1	1	1	1	1	1	1	1	1	1	1	1
	S9	1	1	1	1	1	1	1	1	1	0	1	1	1	1	1	1	1	1	1	1	1	1	1	1	1	1	1	1	1	1	1	1	1	1	1	1	1
	S10	1	1	1	1	1	1	1	1	1	1	0	1	1	1	1	1	1	1	1	1	1	1	1	1	1	1	1	1	1	1	1	1	1	1	1	1	1
	S11	1	1	1	1	1	1	1	1	1	1	1	0	1	1	1	1	1	1	1	1	1	1	1	1	1	1	1	1	1	1	1	1	1	1	1	1	1
	S12	1	1	1	1	1	1	1	1	1	1	1	1	0	1	1	1	1	1	1	1	1	1	1	1	1	1	1	1	1	1	1	1	1	1	1	1	1
	S13	1	1	1	1	1	1	1	1	1	1	1	1	1	0	1	1	1	1	1	1	1	1	1	1	1	1	1	1	1	1	1	1	1	1	1	1	1
	S14	1	1	1	1	1	1	1	1	1	1	1	1	1	1	0	1	1	1	1	1	1	1	1	1	1	1	1	1	1	1	1	1	1	1	1	1	1
	S15	1	1	1	1	1	1	1	1	1	1	1	1	1	1	1	0	1	1	1	1	1	1	1	1	1	1	1	1	1	1	1	1	1	1	0	0	0

* Time slot 32 and output 50: Inhibit input shall go from 1 to 0 before the strobe goes from 1 to 0.

Input/output conditions

Test	V_{DD}	Input levels 1	Input levels 0	Output levels 1 Min	Output levels 0 Max
	Volts				
V_{IH1} V_{IL1}	5.0	3.5V	1.5V	4.5V	0.5V
V_{IH2} V_{IL2}	10.0	7.0V	3.0V	9.0V	1.0V
V_{IH3} V_{IL3}	15.0	11.0V	4.0V	13.5V	1.5V

4/ The device manufacturer may, at his option, measure I_{IL} and I_{IH} at 25°C for each individual input or measure all inputs together.

5/ See 4.4.1c.

6/ The Truth Table Tests shall be performed in sequence.

7/ The Truth Table Tests shall be performed at V_{IH} and $V_{DD} \leq 5$ Vdc and ≥ 18 Vdc. L = V_{SS} +0.50V maximum and H = V_{DD} -0.50V minimum.

8/ t_{SETUP} may be performed concurrently with t_{PLH} or t_{PHL}, using the maximum allowed test t_{SETUP}.

TABLE III. Group A inspection for device type 03.

Symbol	MIL-STD-883 method	Case E,F,Z	Terminal conditions 1/																Measured terminal	Test limits						Units
			1	2	3	4	5	6	7	8	9	10	11	12	13	14	15	16		Subgp 1 T_A = 25°C		Subgp 2 T_A = 125°C		Subgp 3 T_A = -55°C		
		Symbol	D4	D5	D6	D7	E1	Q2	Q1	V_{SS}	Q0	D0	D1	D2	D3	GS	E0	V_{DD}								
		Test No.																		Min	Max	Min	Max	Min	Max	
V_{IC} (pos)		1	1mA															GND	D4		1.5					Vdc
		2		1mA															D5							
		3			1mA														D6							
		4				1mA													D7							
		5					1mA												E1							
		6										1mA							D0							
		7											1mA						D1							
		8												1mA					D2							
		9													1mA				D3							
V_{IC} (neg)		10	-1mA							GND									D4		-6					
		11		-1mA															D5							
		12			-1mA														D6							
		13				-1mA													D7							
		14					-1mA												E1							
		15										-1mA							D0							
		16											-1mA						D1							
		17												-1mA					D2							
		18													-1mA				D3							
I_{SS} 2/	3005	19	GND	GND	GND	GND	GND					GND	GND	GND	GND			18V	V_{SS}		-.25		-2.5			μA
		20			GND	GND	18V																			
		21			GND	18V																				
		22			18V	GND																				
		23		18V	GND																					
		24	18V	GND																						
		25	GND												18V											
		26												18V	GND											
		27											18V	GND	GND											
		28										18V	GND	GND	GND											
V_{OL1}	3007	29	15V	15V	15V	15V	GND					15V	15V	15V	15V			15V	GS		0.05		0.05		0.05	Vdc
		30	GND	GND	GND	GND	15V					GND	GND	GND	GND				Q0							
		31	15V	15V	15V	15V						15V	15V	15V	15V				E0							
		32			15V	GND													Q0							
		33			GND														Q1							
		34		GND															Q1							
		35	GND																Q2							
		36													GND				Q2							
		37												GND					Q2							
		38											GND	GND					Q2							
V_{OH1}	3006	39	GND	GND	GND	GND	15V					GND	GND	GND					E0	14.95		14.95		14.95		
		40	15V	15V	15V	15V						15V	15V	15V	15V				Q0							
		41			15V	GND													Q1							
		42			GND														Q2							
		43		GND															GS							
		44	GND																GS							
		45													GND				Q1							
		46												GND					Q0							
		47											GND	GND					GS							
V_{IL1} V_{IL2} V_{IL3} V_{IH1} V_{IH2} V_{IH3}		48	3/	3/	3/	3/	3/	3/	3/		3/	3/	3/	3/	3/	3/	3/	3/	All outputs	3/	3/	3/	3/	3/	3/	
		49																								
		50																								
		51																								
		52																								
		53																								

See notes at end of device type.

TABLE III. Group A inspection for Q3 - Continued.

Symbol	MIL-STD-883 method	Case E,F,Z	Terminal conditions 1/																Measured terminal	Test limits						Units
			1	2	3	4	5	6	7	8	9	10	11	12	13	14	15	16		Subgp 1 T_A = 25°C		Subgp 2 T_A = 125°C		Subgp 3 T_A = -55°C		
		Symbol	D4	D5	D6	D7	E1	Q2	Q1	V_{SS}	Q0	D0	D1	D2	D3	GS	E0	V_{DD}								
		Test No.																		Min	Max	Min	Max	Min	Max	
I_{OL1}		54	GND	GND	GND	GND	GND	0.4V		GND		GND	GND	GND	GND			5V	Q2	0.51		0.36		0.64		mA
		55							0.4V										Q1							
		56									0.4V								Q0							
		57														0.4V			GS							
		58															0.4V		E0							
I_{OL2}		59						1.5V										15V	Q2	3.4		2.4		4.2		
		60							1.5V										Q1							
		61									1.5V								Q0							
		62														1.5V			GS							
		63															1.5V		E0							
I_{OH1}		64				5V	5V	4.6V										5V	Q2	-0.51		-0.36		-0.64		
		65							4.6V										Q1							
		66									4.6V								Q0							
		67														4.6V			GS							
		68				GND											4.6V		E0							
I_{OH2}		69				15V	15V	13.5V										15V	Q2	-3.4		-2.4		-4.2		
		70							13.5V										Q1							
		71									13.5V								Q0							
		72														13.5V			GS							
		73				GND											13.5V		E0							
I_{IH1} 4/	3010	74	18V	18V	18V	18V	18V					18V	18V	18V	18V			18V	All inputs together		9					nA
I_{IH2}	3010	75	18V	GND	GND	GND	GND					GND	GND	GND	GND				D4		1		45			
		76	GND	18V	GND	GND													D5							
		77		GND	18V	GND													D6							
		78			GND	18V													D7							
		79				GND	18V												E1							
		80					GND					18V							D0							
		81										GND	18V						D1							
		82										GND	GND	18V					D2							
		83										GND	GND	GND	18V				D3							
I_{IL1} 4/	3009	84					GND					GND	GND	GND	GND				All inputs together		-9					
I_{IL2}		85	GND	18V	18V	18V	18V					18V	18V	18V	18V				D4		-1		-45			
		86	18V	GND	18V														D5							
		87		18V	GND														D6							
		88			18V	GND													D7							
		89				18V	GND												E1							
		90					18V					GND							D0							
		91										18V	GND						D1							
		92											18V	GND					D2							
		93											18V	18V	GND				D3							
																				Subgp 4 T_A = 25°C						
																				Min	Max					
C_i	3012	94	5/															GND	D4		7.5					pF
		95		5/															D5							
		96			5/														D6							
		97				5/													D7							
		98					5/												E1							
		99										5/							D0							
		100											5/						D1							
		101												5/					D2							
		102													5/				GS							

See notes at end of device type.

TABLE III. Group A inspection for device type 03 - Continued.

Symbol	MIL-STD-883 method	Case E,F,Z Symbol	Test No.	Terminal conditions 1/ 1 D4	2 D5	3 D6	4 D7	5 E1	6 Q2	7 Q1	8 V_{SS}	9 Q0	10 D0	11 D1	12 D2	13 D3	14 GS	15 E0	16 V_{DD}	Measured terminal	Test limits Subgp 7 T_A = 25°C Min	Subgp 7 T_A = 25°C Max	Subgp 8 T_A = 125°C Min	Subgp 8 T_A = 125°C Max	Subgp 8 T_A = -55°C Min	Subgp 8 T_A = -55°C Max	Units
TRUTH TABLE TEST	3014		103	5V	5V	5V	5V	GND	GND	GND	GND	GND	5V	5V	5V	5V	GND	GND	5V	All outputs	See 6/ 7/						
			104	GND	GND	GND	GND	5V	GND	GND		GND	GND	GND	GND	GND	GND	5V									
			105	5V	5V	5V	5V		5V	5V		5V	5V	5V	5V	5V	5V	GND									
			106		5V	5V	GND			5V		GND															
			107		5V	GND				GND		5V															
			108		GND					GND		GND															
			109	GND					GND	5V		5V															
			110							5V		GND				GND											
			111							GND		5V			GND	GND											
			112							GND		GND		GND	GND	GND											
																					Subgp 9 T_A = 25°C Min	Subgp 9 T_A = 25°C Max	Subgp 10 T_A = 125°C Min	Subgp 10 T_A = 125°C Max	Subgp 11 T_A = -55°C Min	Subgp 11 T_A = -55°C Max	
t_{PHL1} & t_{PLH1}	3003 Fig 7		113	GND	GND	GND	GND	IN			GND		GND	GND	GND	GND		OUT	5V	E1 to E0	11	220	16	310	11	220	ns
			114				GND											OUT		E1 to E0							
			115				5V										OUT			E1 to GS							
			116				5V										OUT			E1 to GS							
t_{PHL2} & t_{PLH2}			117				GND					OUT		5V						E1 to Q0	17	340	24	480	17	340	
			118							OUT				GND	5V					E1 to Q1							
			119									OUT			GND	5V				E1 to Q0							
t_{PHL3} & t_{PLH3}			120							OUT						5V				E1 to Q1							
			121	5V					OUT							GND				E1 to Q2							
			122	GND	5V				OUT											E1 to Q2							
			123		5V							OUT								E1 to Q0							
			124		GND	5V				OUT										E1 to Q1							
			125			5V			OUT											E1 to Q2							
			126			GND	5V					OUT								E1 to Q0							
			127			GND	5V			OUT										E1 to Q1							
			128			GND	5V		OUT											E1 to Q2							
t_{PHL4} & t_{PLH4}			129				GND	5V					IN				OUT		5V	D0 to GS							
			130										GND							D1 to GS							
			131											IN						D2 to GS							
			132											GND	IN					D3 to GS							
			133	IN											GND	IN				D4 to GS							
			134	GND	IN											GND				D5 to GS							
			135		GND	IN														D6 to GS							
			136			GND	IN													D7 to GS							
t_{PHL5} & t_{PLH5}			137				GND					OUT		IN					5V	D1 to Q0	22	440	31	620	22	440	
			138							OUT				GND	IN					D2 to Q1							
			139									OUT			GND	IN				D3 to Q0							
			140							OUT						IN				D3 to Q1							
			141	IN					OUT							GND				D4 to Q2							
			142	GND	IN							OUT								D5 to Q0							
			143		IN				OUT											D5 to Q2							
			144		GND	IN			OUT											D6 to Q2							
			145			IN				OUT										D6 to Q1							
			146			GND	IN					OUT								D7 to Q0							
			147				IN			OUT										D7 to Q1							
			148				IN		OUT											D7 to Q2							

See notes at end of device type.

TABLE III. Group A inspection for device type 03 - Continued.

Symbol	MIL-STD-883 method	Case E,F,Z	Terminal conditions 1/ 1	2	3	4	5	6	7	8	9	10	11	12	13	14	15	16	Measured terminal	Test limits Subgp 9 T_A = 25°C Min	Subgp 9 Max	Subgp 10 T_A = 125°C Min	Subgp 10 Max	Subgp 11 T_A = -55°C Min	Subgp 11 Max	Units
		Symbol	D4	D5	D6	D7	E1	Q2	Q1	V_{SS}	Q0	D0	D1	D2	D3	GS	E0	V_{DD}								
		Test No.																								
t_{THL} & t_{TLH}	3004 Fig 7	149	GND	GND	GND	5.0V	IN			GND	OUT	GND	GND	GND	GND			5V	Q0	10	200	14	280	10	200	ns
		150							OUT										Q1							
		151						OUT											Q2							
																				Subgp 12 T_A = 25°C Min	Max					
t_{PHL1}	3003 Fig 7	152	GND	GND	GND	GND	IN			GND		GND	GND	GND	GND		OUT	10.0V	EI to E0	6	110					ns
t_{PLH1}		153				GND											OUT		EI to E0							
t_{PHL2}		154				10.0										OUT			EI to GS							
t_{PLH2}		155				10.0										OUT			EI to GS							
t_{PHL3}		156				GND					OUT		10.0						EI to Q0	9	170					
		157							OUT				GND	10.0					EI to Q1							
		158									OUT			GND	10.0				EI to Q0							
		159							OUT						10.0				EI to Q1							
		160	10.0					OUT							GND				EI to Q2							
		161	GND	10.0				OUT											EI to Q2							
		162		10.0							OUT								EI to Q0							
		163		GND	10.0				OUT										EI to Q1							
		164			10.0			OUT											EI to Q2							
		165			GND	10.0					OUT								EI to Q0							
		166				10.0			OUT										EI to Q1							
		167				10.0		OUT											EI to Q2							
t_{PLH3}		168				GND					OUT		10.0						EI to Q0							
		169							OUT										EI to Q1							
		170									OUT								EI to Q0							
		171							OUT										EI to Q1							
		172	10.0					OUT											EI to Q2							
		173	GND	10.0				OUT											EI to Q2							
		174		10.0							OUT								EI to Q0							
		175		GND	10.0				OUT										EI to Q1							
		176			10.0			OUT											EI to Q2							
		177			GND	10.0					OUT								EI to Q0							
		178				10.0			OUT										EI to Q1							
		179				10.0		OUT											EI to Q2							
t_{PHL4}	3003 Fig 7	180				GND	10.0					IN	GND			OUT			D0 to GS							
		181										GND	IN						D1 to GS							
		182											GND	IN					D2 to GS							
		183												GND	IN				D3 to GS							
		184	IN												GND				D4 to GS							
		185	GND	IN															D5 to GS							
		186	GND	GND	IN														D6 to GS							
		187	GND	GND	GND														D7 to GS							
t_{PLH4}		188	GND	GND	GND							IN							D0 to GS							
		189										GND	IN	GND					D1 to GS							
		190											GND	IN					D2 to GS							
		191												GND	IN				D3 to GS							
		192	IN												GND				D4 to GS							
		193	GND	IN															D5 to GS							
		194		GND	IN														D6 to GS							
		195		GND	GND	IN													D7 to GS							

See notes at end of device type.

TABLE III. Group A inspection for device type 03 - Continued.

Symbol	MIL-STD-883 method	Case E,F,Z	Terminal conditions 1/																Measured terminal	Test limits Subgp 12 T_A = 25°C						Units
			1	2	3	4	5	6	7	8	9	10	11	12	13	14	15	16								
		Symbol	D4	D5	D6	D7	E1	Q2	Q1	V_{SS}	Q0	D0	D1	D2	D3	GS	E0	V_{DD}								
		Test No.																		Min	Max	Min	Max	Min	Max	
t_{PHL5}	3003 Fig 7	196	GND	GND	GND	GND	10.0		OUT	GND	OUT	GND	IN GND	GND IN GND	GND GND IN IN GND			10.0V	D1 to Q0	11	220					ns
		197							OUT		OUT								D2 to Q1							
		198																	D3 to Q0							
		199																	D3 to Q1							
		200	IN GND					OUT											D4 to Q2							
		201		IN IN GND							OUT								D5 to Q0							
		202						OUT OUT											D5 to Q2							
		203			IN IN GND				OUT										D6 to Q2							
		204									OUT								D6 to Q1							
		205				IN			OUT										D7 to Q0							
		206																	D7 to Q1							
		207						OUT											D7 to Q2							
t_{PLH5}		208				GND			OUT		OUT		IN GND	IN GND	IN IN GND				D1 to Q0							
		209							OUT		OUT								D2 to Q1							
		210																	D3 to Q0							
		211																	D3 to Q1							
		212	IN GND					OUT											D4 to Q2							
		213		IN IN GND							OUT								D5 to Q0							
		214						OUT OUT											D5 to Q2							
		215			IN IN GND				OUT										D6 to Q2							
		216									OUT								D6 to Q1							
		217				IN IN IN			OUT										D7 to Q0							
		218																	D7 to Q1							
		219						OUT											D7 to Q2							
t_{THL} t_{TLH}	3004 Fig 7	220				10.0	IN		OUT		OUT								Q0	5	100					
		221																	Q1							
		222						OUT											Q2							
		223							OUT		OUT								Q0							
		224																	Q1							
		225						OUT											Q2							

1/ Pins not designated may be High level logic, Low level logic or open. Exceptions are as follows: $V_{IC(pos)}$ tests, the V_{SS} terminal shall be open; $V_{IC(neg)}$ tests, the V_{DD} terminal shall be open; I_{SS} tests, the output terminals shall be open.

2/ The I_{SS} measurements shall be performed in sequence.

3/ The following timing sequence and input/output conditions shall apply. These tests require only a summary of attributes data.

TIME SLOT	Inputs									Outputs				
	E1	D7	D6	D5	D4	D3	D2	D1	D0	GS	Q2	Q1	Q0	E0
1	0	X	X	X	X	X	X	X	X	0	0	0	0	0
2	1	0	0	0	0	0	0	0	0	0	0	0	0	1
3	1	1	X	X	X	X	X	X	X	1	1	1	1	0
4	1	0	1	X	X	X	X	X	X	1	1	1	0	0
5	1	0	0	1	X	X	X	X	X	1	1	0	1	0
6	1	0	0	0	1	X	X	X	X	1	1	0	0	0
7	1	0	0	0	0	1	X	X	X	1	0	1	1	0
8	1	0	0	0	0	0	1	X	X	1	0	1	0	0
9	1	0	0	0	0	0	0	1	X	1	0	0	1	0
10	1	0	0	0	0	0	0	0	1	1	0	0	0	0

Test	V_{DD} Volts	Input/output conditions: Input levels 1	Input levels 0	Output levels 1 Min	Output levels 0 Max
V_{OH1} V_{OL1}	15.0	15.00	GND	14.95V	0.05V
V_{IH1} V_{IL1}	5.0	3.5V	1.5V	4.5V	0.5V
V_{IH2} V_{IL2}	10.0	7.0V	3.0V	9.0V	1.0V
V_{IH3} V_{IL3}	15.0	11.0V	4.0V	13.5V	1.5V

4/ The device manufacturer may, at his option, measure I_{IL} and I_{IH} at 25°C for individual input or measure all inputs together.

5/ See 4.4.1c.

6/ The Truth Table Tests shall be performed in sequence.

7/ The Truth Table Tests shall be performed at V_{IH} and $V_{DD} \leq 5$ Vdc and ≥ 18 Vdc. L = 0.50V maximum and H = V_{DD} -0.50V minimum.

TABLE III. Group A inspection for device type 04.

Symbol	MIL-STD-883 method	Case E,F,Z	Terminal conditions 1/ 1	2	3	4	5	6	7	8	9	10	11	12	13	14	15	16	Measured terminal	Test limits Subgp 1 T_A = 25°C Min	Subgp 1 Max	Subgp 2 T_A = 125°C Min	Subgp 2 Max	Subgp 3 T_A = -55°C Min	Subgp 3 Max	Units
		Symbol	$\overline{1E}$	1A	1B	1Q0	1Q1	1Q2	1Q3	V_{SS}	2Q3	2Q2	2Q1	2Q0	2B	2A	$\overline{2E}$	V_{DD}								
		Test No.																								
V_{IC} (pos)		1	1mA															GND	$\overline{1E}$		1.5					Vdc
		2		1mA															1A							
		3			1mA														1B							
		4													1mA				2B							
		5														1mA			2A							
		6															1mA		$\overline{2E}$							
V_{IC} (neg)		7	-1mA							GND									$\overline{1E}$		-6.0					
		8		-1mA															1A							
		9			-1mA														1B							
		10													-1mA				2B							
		11														-1mA			2A							
		12															-1mA		$\overline{2E}$							
I_{SS} 2/		13	GND	GND	GND										GND	GND	GND	18V	V_{SS}		-.25		-2.5			μA
		14		GND	18V										18V	GND										
		15		18V	GND										GND	18V										
		16			18V										18V											
		17	18V		18V										18V		18V									
V_{OL1}	3007	18	GND	GND	GND										GND	GND	GND	15V	1Q3		0.05		0.05		0.05	Vdc
		19		15V	GND														1Q2							
		20		GND	15V														1Q1							
		21		15V	15V														1Q0							
		22	15V	15V	15V														1Q3							
		23	GND	GND	GND														2Q3							
		24														15V			2Q2							
		25													15V	GND			2Q1							
		26													15V	15V			2Q0							
		27													15V	15V	15V		2Q3							
V_{OH1}	3006	28													GND	GND	GND		1Q0	14.95		14.95		14.95		
		29		15V															1Q1							
		30		GND	15V														1Q2							
		31		15V	15V														1Q3							
		32		GND	GND														2Q0							
		33														15V			2Q1							
		34													15V	GND			2Q2							
		35													15V	15V			2Q3							
V_{IL1}		36	3/	3/	3/	3/	3/	3/	3/		3/	3/	3/	3/	3/	3/	3/	3/	All outputs	3/	3/	3/	3/	3/	3/	
V_{IL2}		37																								
V_{IL3}		38																								
V_{IH1}		39																								
V_{IH2}		40																								
V_{IH3}		41																								
I_{OL1}		42	5V	GND	GND	0.4V									GND	GND	5V	5V	1Q0	0.51		0.36		0.64		nA
		43					0.4V												1Q1							
		44						0.4V											1Q2							
		45							0.4V										1Q3							
		46									0.4V								2Q3							
		47										0.4V							2Q2							
		48											0.4V						2Q1							
		49												0.4V					2Q0							

See notes at end of device type.

Group A inspection for device type 04 - Continued.

Symbol	MIL-STD-883 method	Case E,F,Z	Terminal conditions 1/ 1	2	3	4	5	6	7	8	9	10	11	12	13	14	15	16	Measured terminal	Test limits Subgp 1 T_A = 25°C Min	Subgp 1 Max	Subgp 2 T_A = 125°C Min	Subgp 2 Max	Subgp3 T_A = -55°C Min	Subgp3 Max	Units
		Symbol	$\overline{1E}$	1A	1B	1Q0	1Q1	1Q2	1Q3	V_{SS}	2Q3	2Q2	2Q1	2Q0	2B	2A	$\overline{2E}$	V_{DD}								
		Test No.																								
I_{OL2}		50	15V	GND	GND	1.5V				GND					GND	GND	15V	15V	1Q0	3.4		2.4		4.2		mA
		51					1.5V												1Q1							
		52						1.5V											1Q2							
		53							1.5V										1Q3							
		54									1.5V								2Q3							
		55										1.5V							2Q2							
		56											1.5V						2Q1							
		57												1.5V					2Q0							
I_{OH1}		58	GND	GND	GND	4.6V									5V	5V	GND	5V	1Q0	-0.51		-0.36		-0.64		
		59		5V	GND		4.6V												1Q1							
		60		GND	5V			4.6V											1Q2							
		61		5V					4.6V										1Q3							
		62									4.6V								2Q3							
		63										4.6V				GND			2Q2							
		64											4.6V		GND	5V			2Q1							
		65												4.6V	GND	GND			2Q0							
I_{OH2}		66		GND	GND	13.5V									15V	15V		15V	1Q0	-3.4		-2.4		-4.2		
		67		15V	GND		13.5V												1Q1							
		68		GND	15V			13.5V											1Q2							
		69		15V					13.5V										1Q3							
		70									13.5V								2Q3							
		71										13.5V				GND			2Q2							
		72											13.5V		GND	15V			2Q1							
		73												13.5V	GND	GND			2Q0							
I_{IH1} 4/	3010	74	18V	18V	18V										18V	18V	18V	18V	All inputs together		6					nA
I_{IH2}		75	18V	GND	GND										GND	GND	GND		$\overline{1E}$		1		45			
		76	GND	18V	GND														1A							
		77		GND	18V														1B							
		78			GND										18V				2B							
		79													GND	18V			2A							
		80													GND	GND	18V		$\overline{2E}$							
I_{IL1} 4/	3009	81	GND	GND	GND										GND	GND	GND		All inputs together		-6					
I_{IL2}		82	GND	18V	18V										18V	18V	18V		$\overline{1E}$		-1		-45			
		83	18V	GND	18V														1A							
		84		18V	GND														1B							
		85		18V	18V										GND				2B							
		86													18V	GND			2A							
		87													18V	18V	GND		$\overline{2E}$							
																				Subgp 4 T_A = 25°C Min	Max					
C_i	3012	88	5/							GND								GND	$\overline{1E}$		7.5					pF
		89		5/															1A							
		90			5/														1B							
		91													5/				2B							
		92														5/			2A							
		93															5/		$\overline{2E}$							

See notes at end of device type.

TABLE III. Group A inspection for device type 04 - Continued.

Symbol	MIL-STD-883 method	Case E,F,Z	Terminal conditions 1/ 1	2	3	4	5	6	7	8	9	10	11	12	13	14	15	16	Measured terminal	Test limits Subgp 7 T_A = 25°C Min	Max	Subgp 8 T_A = 125°C Min	Max	Subgp 8 T_A = -55°C Min	Max	Units
		Symbol	$\overline{1E}$	1A	1B	1Q0	1Q1	1Q2	1Q3	V_{SS}	2Q3	2Q2	2Q1	2Q0	2B	2A	$\overline{2E}$	V_{DD}								
		Test No.																								
TRUTH TABLE TEST	3014	94	GND	GND	GND	H	L	L	L	GND								5V	All outputs	See 6 7/						
		95		5V	GND	L	H	L	L																	
		96		GND	5V		L	H	H																	
		97		5V	5V			L	L																	
		98	5V	5V	5V			L	L																	
		99									L	L	L	H	GND	GND	GND									
		100									L	L	H	L	GND	5V										
		101									L	H	L		5V	GND										
		102									H	L	L			5V										
		103									L	L				5V	5V									
																				Subgp 9 T_A = 25°C Min	Max	Subgp 10 T_A = 125°C Min	Max	Subgp 11 T_A = -55°C Min	Max	
t_{PHL1} & t_{PLH1}	3003 Fig 7	104	GND	GND	IN	OUT									GND	GND	GND		1B to 1Q0	22	440	31	620	22	440	ns
		105		GND	IN		OUT												1B to 1Q1							
		106		IN	GND			OUT											1A to 1Q2							
		107		IN	GND	OUT													1A to 1Q0							
		108		5V	IN		OUT												1B to 1Q1							
		109		5V	IN				OUT										1B to 1Q3							
		110		IN	5V			OUT											1A to 1Q2							
		111		IN	5V				OUT										1A to 1Q3							
		112		GND	GND									OUT	IN				2B to 2Q0							
		113											OUT		IN				2B to 2Q1							
		114										OUT			GND	IN			2A to 2Q2							
		115												OUT	GND	IN			2A to 2Q0							
		116											OUT		IN	5V			2B to 2Q1							
		117									OUT				IN	5V			2B to 2Q3							
		118										OUT			5V	IN			2A to 2Q2							
		119									OUT				5V	IN			2A to 2Q3							
t_{PHL2} & t_{PLH2}		120	IN	GND	GND	OUT									GND	GND	GND		1E to 1Q0	20	400	28	560	20	400	
		121		5V	GND		OUT												$\overline{1E}$ to 1Q1							
		122		GND	5V			OUT											$\overline{1E}$ to 1Q2							
		123		5V	5V				OUT										$\overline{1E}$ to 1Q3							
		124	GND	GND	GND									OUT			IN		$\overline{2E}$ to 2Q0							
		125											OUT		5V	5V			$\overline{2E}$ to 2Q1							
		126										OUT				GND			$\overline{2E}$ to 2Q2							
		127									OUT				5V	5V			$\overline{2E}$ to 2Q3							
		128	IN			OUT									GND	GND	GND		$\overline{1E}$ to 1Q0							
		129		5V			OUT												$\overline{1E}$ to 1Q1							
		130		GND	5V			OUT											$\overline{1E}$ to 1Q2							
		131		5V	5V				OUT										$\overline{1E}$ to 1Q3							
		132	GND	GND	GND									OUT			IN		$\overline{2E}$ to 2Q0							
		133											OUT		5V	5V			$\overline{2E}$ to 2Q1							
		134										OUT				GND			$\overline{2E}$ to 2Q2							
		135									OUT				5V	5V			$\overline{2E}$ to 2Q3							
t_{THL} & t_{TLH}	3004 Fig 7	136	IN	GND	GND	OUT									GND	GND	GND		1Q0	10	200	14	280	10	200	
		137		5V	GND		OUT												1Q1							
		138		GND	5V			OUT											1Q2							
		139		5V	5V				OUT										1Q3							
		140	GND	GND	GND									OUT			IN		2Q0							
		141											OUT		5V	5V			2Q1							
		142										OUT				GND			2Q2							
		143									OUT				5V	5V			2Q3							

See notes at end of device type.

TABLE III. Group A inspection for device type 04 - Continued.

Symbol	MIL-STD-883 method	Case E,F,Z	Terminal conditions 1/ 1	2	3	4	5	6	7	8	9	10	11	12	13	14	15	16	Measured terminal	Test limits Subgp 12 T_A = 25°C Min	Max	Min	Max	Min	Max	Units
		Symbol	$\overline{1E}$	1A	1B	1Q0	1Q1	1Q2	1Q3	V_{SS}	2Q3	2Q2	2Q1	2Q0	2B	2A	$\overline{2E}$	V_{DD}								
		Test No.																								
t_{PHL1} & t_{PLH1}	3003 Fig 7	144	GND	GND	IN	OUT				GND					GND	GND	GND	10.0V	1B to 1Q0	10	190					ns
		145		GND	IN		OUT												1B to 1Q1							
		146		IN	GND			OUT											1A to 1Q2							
		147		IN	GND	OUT													1A to 1Q0							
		148		10.0	IN		OUT												1B to 1Q1							
		149		10.0	IN				OUT										1B to 1Q3							
		150		IN	10.0			OUT											1A to 1Q2							
		151		IN	10.0				OUT										1A to 1Q3							
		152		GND	GND														2B to 2Q0							
		153												OUT	IN				2B to 2Q1							
		154											OUT		IN	IN			2A to 2Q2							
		155										OUT			GND				2A to 2Q0							
		156											OUT	OUT	GND	IN			2B to 2Q1							
		157													IN	10.0			2B to 2Q3							
		158									OUT				IN	10.0			2A to 2Q2							
		159									OUT	OUT			10.0	IN			2A to 2Q3							
t_{PHL2} & t_{PLH2}		160	IN	GND	GND	OUT									GND	GND			$\overline{1E}$ to 1Q0	9	170					
		161		10.0	GND		OUT												$\overline{1E}$ to 1Q1							
		162		GND	10.0			OUT											$\overline{1E}$ to 1Q2							
		163		10.0	10.0				OUT										$\overline{1E}$ to 1Q3							
		164	GND	GND	GND									OUT			IN		$\overline{2E}$ to 2Q0							
		165											OUT			10.0			$\overline{2E}$ to 2Q1							
		166										OUT			10.0	GND			$\overline{2E}$ to 2Q2							
		167									OUT				10.0	10.0			$\overline{2E}$ to 2Q3							
t_{THL} & t_{TLH}	3004 Fig 7	168	IN			OUT									GND	GND	GND		1Q0	5	100					
		169		10.0			OUT												1Q1							
		170		GND	10.0			OUT											1Q2							
		171		10.0	10.0				OUT										1Q3							
		172	GND	GND	GND									OUT			IN		2Q0							
		173											OUT			10.0			2Q1							
		174										OUT			10.0	GND			2Q2							
		175									OUT				10.0	10.0			2Q3							

1/ Pins not designated may be High level logic, Low level logic or Open. Exceptions are as follows: $V_{IC(pos)}$ tests, the V_{SS} terminal shall be open; $V_{IC(neg)}$ tests, the V_{DD} terminal shall be open; I_{SS} tests, the output terminals shall be open.

2/ The I_{SS} measurements shall be performed in sequence.

3/ The following timing sequence and input/output conditions shall apply: These tests require only a summary of attributes data.

Inputs Enable E	B	select A	Outputs Device type 04 Q3	Q2	Q1	Q0
0	0	0	0	0	0	1
0	0	1	0	0	1	0
0	1	0	0	1	0	0
0	1	1	1	0	0	0
1	X	X	0	0	0	0

4/ The device manufacturer may, at his option, measure I_{IL} and I_{IH} at 25°C for individual input or measure all inputs together.

5/ See 4.4.1c.

6/ The Truth Table Tests shall be performed in sequence.

7/ The Truth Table Tests shall be performed at V_{IH} and $V_{DD} \leq 5$ Vdc and ≥ 18 Vdc. L = V_{SS} +0.50 V maximum and H = V_{DD} -0.50 V minimum.

Input/output conditions

Test	V_{DD} Volts	Input levels 1	0	Output levels 1 Min	0 Max
V_{IH1} V_{IL1}	5.0	3.5V	1.5V	4.5V	0.5V
V_{IH2} V_{IL2}	10.0	7.0V	3.0V	9.0V	1.0V
V_{IH3} V_{IL3}	15.0	11.0V	4.0V	13.5V	1.5V

TABLE III. Group A inspection for device type 05.

Symbol	MIL-STD-883 method	Case E,F,Z / Symbol / Test No.	Terminal conditions 1/ 1 ($\overline{1E}$)	2 (1A)	3 (1B)	4 ($\overline{1Q0}$)	5 ($\overline{1Q1}$)	6 ($\overline{1Q2}$)	7 ($\overline{1Q3}$)	8 (V_{SS})	9 ($\overline{2Q3}$)	10 ($\overline{2Q2}$)	11 ($\overline{2Q1}$)	12 ($\overline{2Q0}$)	13 (2B)	14 (2A)	15 ($\overline{2E}$)	16 (V_{DD})	Measured terminal	Test limits: Subgp 1 T_A = 25°C Min	Subgp 1 Max	Subgp 2 T_A = 125°C Min	Subgp 2 Max	Subgp 3 T_A = -55°C Min	Subgp 3 Max	Units
V_{IC} (pos)		1	1mA															GND	$\overline{1E}$		1.5					Vdc
		2		1mA															1A							
		3			1mA														1B							
		4													1mA				2B							
		5														1mA			2A							
		6															1mA		$\overline{2E}$							
V_{IC} (neg)		7	-1mA							GND									$\overline{1E}$		-6.0					
		8		-1mA															1A							
		9			-1mA														1B							
		10													-1mA				2B							
		11														-1mA			2A							
		12															-1mA		$\overline{2E}$							
I_{SS} 2/		13	GND	GND	GND										GND	GND	GND	18V	V_{SS}		-.25		-2.5			μA
		14		GND											18V	GND										
		15		18V											GND	18V										
		16			18V										18V											
		17	18V		18V										18V		18V									
V_{OL1}	3007	18	GND	GND	GND										GND	GND	GND	15V	$\overline{1Q0}$		0.05		0.05		0.05	Vdc
		19		15V	GND														$\overline{1Q1}$							
		20		GND	15V														$\overline{1Q2}$							
		21		15V	15V														$\overline{1Q3}$							
		22		GND	GND														$\overline{2Q0}$							
		23														15V			$\overline{2Q1}$							
		24													15V	GND			$\overline{2Q2}$							
		25													15V	15V			$\overline{2Q3}$							
V_{OH1}	3006	26													GND	GND			$\overline{1Q3}$	14.95		14.95		14.95		
		27		15V															$\overline{1Q2}$							
		28		GND	15V														$\overline{1Q1}$							
		29		15V	15V														$\overline{1Q0}$							
		30	15V	15V	15V														$\overline{1Q0}$							
		31	GND	GND	GND														$\overline{2Q3}$							
		32														15V			$\overline{2Q2}$							
		33													15V	GND			$\overline{2Q1}$							
		34														15V			$\overline{2Q0}$							
		35														15V	15V		$\overline{2Q0}$							
V_{IL1}		36	3/	3/	3/	3/	3/	3/	3/		3/	3/	3/	3/	3/	3/	3/	3/	All outputs	3/	3/	3/	3/	3/	3/	
V_{IL2}		37																								
V_{IL3}		38																								
V_{IH1}		39																								
V_{IH2}		40																								
V_{IH3}		41																								
I_{OL1}		42	GND	GND	GND	0.4V									GND	GND	GND	5V	$\overline{1Q0}$	0.51		0.36		0.64		mA
		43		5V	GND		0.4V												$\overline{1Q1}$							
		44		GND	5V			0.4V											$\overline{1Q2}$							
		45		5V	5V				0.4V										$\overline{1Q3}$							
		46		GND	GND						0.4V				5V	5V			$\overline{2Q3}$							
		47										0.4V			5V	GND			$\overline{2Q2}$							
		48											0.4V		GND	5V			$\overline{2Q1}$							
		49												0.4V	GND	GND			$\overline{2Q0}$							
I_{OL2}		50				1.5V									GND	GND		15V	$\overline{1Q0}$	3.4		2.4		4.2		
		51		15V			1.5V												$\overline{1Q1}$							
		52		GND	15V			1.5V											$\overline{1Q2}$							
		53		15V	15V				1.5V										$\overline{1Q3}$							
		54		GND	GND						1.5V				15V	15V			$\overline{2Q3}$							
		55										1.5V			15V	GND			$\overline{2Q2}$							
		56											1.5V		GND	15V			$\overline{2Q1}$							
		57												1.5V	GND	GND			$\overline{2Q0}$							

See notes at end of device type.

TABLE III. Group A inspection for device type 05 - Continued.

Symbol	MIL-STD-883 method	Case E,F,Z	Terminal conditions 1/																Measured terminal	Test limits						Units
			1	2	3	4	5	6	7	8	9	10	11	12	13	14	15	16		Subgp 1 T_A = 25°C		Subgp 2 T_A = 125°C		Subgp 3 T_A = -55°C		
		Symbol	$\overline{1E}$	1A	1B	$\overline{1Q0}$	$\overline{1Q1}$	$\overline{1Q2}$	$\overline{1Q3}$	V_{SS}	$\overline{2Q3}$	$\overline{2Q2}$	$\overline{2Q1}$	$\overline{2Q0}$	2B	2A	$\overline{2E}$	V_{DD}								
		Test No.																		Min	Max	Min	Max	Min	Max	
I_{OH1}		58	5V	GND	GND	4.6V				GND					GND	GND	5V	5V	$\overline{1Q0}$	-0.51		-0.36		-0.64		mA
		59					4.6V												$\overline{1Q1}$							
		60						4.6V											$\overline{1Q2}$							
		61							4.6V										$\overline{1Q3}$							
		62									4.6V								$\overline{2Q3}$							
		63										4.6V							$\overline{2Q2}$							
		64											4.6V						$\overline{2Q1}$							
		65												4.6V					$\overline{2Q0}$							
I_{OH2}		66	15V			13.5V											15V	15V	$\overline{1Q0}$	-3.4		-2.4		-4.2		
		67					13.5V												$\overline{1Q1}$							
		68						13.5V											$\overline{1Q2}$							
		69							13.5V										$\overline{1Q3}$							
		70									13.5V								$\overline{2Q3}$							
		71										13.5V							$\overline{2Q2}$							
		72											13.5V						$\overline{2Q1}$							
		73												13.5V					$\overline{2Q0}$							
I_{IH1} 4/	3010	74	18V	18V	18V					GND					18V	18V	18V	18V	All inputs together		6					nA
I_{IH2}	3010	75	18V	GND	GND										GND	GND	GND	18V	$\overline{1E}$		1		45			
		76	GND	18V	GND										GND				1A							
		77		GND	18V										GND				1B							
		78			GND										18V				2B							
		79													GND	18V			2A							
		80													GND	GND	18V		$\overline{2E}$							
I_{IL1} 4/	3009	81	GND	GND	GND					GND					GND	GND	GND		All inputs together		-6					
I_{IL2}	3009	82	GND	18V	18V					GND					18V	18V	18V		$\overline{1E}$		-1		-45			
		83	18V	GND	18V										18V				1A							
		84		18V	GND										18V				1B							
		85			18V										GND				2B							
		86													18V	GND			2A							
		87													18V	18V	GND		$\overline{2E}$							
																				Subgp 4 T_A = 25°C						
																				Min	Max					
C_i	3012	88	5/							GND								GND	$\overline{1E}$		7.5					pF
		89		5/															1A							
		90			5/														1B							
		91													5/				2B							
		92														5/			2A							
		93															5/		$\overline{2E}$							

See notes at end of device type.

TABLE III. Group A inspection for device type 05 - Continued.

Symbol	MIL-STD-883 method	Case E,F,Z	Terminal conditions 1/ 1	2	3	4	5	6	7	8	9	10	11	12	13	14	15	16	Measured terminal	Test limits Subgp 7 T_A = 25°C Min	Max	Subgp 8 T_A = 125°C Min	Max	Subgp 8 T_A = -55°C Min	Max	Units
		Symbol	$\overline{1E}$	1A	1B	$\overline{1Q0}$	$\overline{1Q1}$	$\overline{1Q2}$	$\overline{1Q3}$	V_{SS}	$\overline{2Q3}$	$\overline{2Q2}$	$\overline{2Q1}$	$\overline{2Q0}$	2B	2A	$\overline{2E}$	V_{DD}								
		Test No.																								
TRUTH TABLE TEST	3014	94	GND	GND	GND	L	H	H	H	GND	H	H	H	L	GND	GND	GND	5V	All outputs	See 6/ 7/						
		95		5V	GND	H	L	H	H		H	H	L	H	GND	5V										
		96		GND	5V	H	H	L	H		H	L	H	H	5V	GND										
		97		5V	5V	H	H	H	L		L	H	H	H	5V	5V										
		98	5V	5V	5V	H	H	H	H		H	H	H	H	5V	5V	5V									
																				Subgp 9 T_A = 25°C Min	Max	Subgp 10 T_A = 125°C Min	Max	Subgp 11 T_A = -55°C Min	Max	
t_{PHL1} & t_{PLH1}	3003 Fig 7	99	GND	GND	IN		OUT			GND					GND	GND	GND	5V	1B to $\overline{1Q0}$	22	440	31	620	22	440	ns
		100		5V	IN	OUT													1B to $\overline{1Q2}$							
		101		IN	GND			OUT											1A to $\overline{1Q1}$							
		102		IN	GND	OUT													1A to $\overline{1Q0}$							
		103		5V	IN		OUT												1B to $\overline{1Q1}$							
		104		5V	IN				OUT										1B to $\overline{1Q3}$							
		105		IN	5V			OUT											1A to $\overline{1Q2}$							
		106		IN	5V				OUT										1A to $\overline{1Q3}$							
		107		GND	GND								OUT		IN				2B to $\overline{2Q0}$							
		108												OUT	IN				2B to $\overline{2Q2}$							
		109										OUT			GND	IN			2A to $\overline{2Q1}$							
		110												OUT	GND	IN			2A to $\overline{2Q0}$							
		111											OUT		IN	5V			2B to $\overline{2Q1}$							
		112									OUT				IN	5V			2B to $\overline{2Q3}$							
		113										OUT			5V	IN			2A to $\overline{2Q2}$							
		114									OUT				5V	IN			2A to $\overline{2Q3}$							
t_{PHL2} & t_{PLH2}		115	IN	GND	GND	OUT									GND	GND			$\overline{1E}$ to $\overline{1Q0}$	20	400	28	560	20	400	
		116		5V	GND		OUT												$\overline{1E}$ to $\overline{1Q1}$							
		117		GND	5V			OUT											$\overline{1E}$ to $\overline{1Q2}$							
		118		5V	5V				OUT										$\overline{1E}$ to $\overline{1Q3}$							
		119	GND	GND	GND									OUT			IN		$\overline{2E}$ to $\overline{2Q0}$							
		120											OUT			5V			$\overline{2E}$ to $\overline{2Q1}$							
		121										OUT			5V	GND			$\overline{2E}$ to $\overline{2Q2}$							
		122									OUT				5V	5V			$\overline{2E}$ to $\overline{2Q3}$							
t_{THL} & t_{TLH}	3004 Fig 7	123	IN	5V		OUT									GND	GND	GND		$\overline{1Q0}$	10	200	14	280	10	200	
		124		GND	5V		OUT												$\overline{1Q1}$							
		125		5V	5V			OUT											$\overline{1Q2}$							
		126		GND	GND				OUT										$\overline{1Q3}$							
		127	GND											OUT			IN		$\overline{2Q0}$							
		128											OUT			5V			$\overline{2Q1}$							
		129										OUT			5V	GND			$\overline{2Q2}$							
		130									OUT				5V	5V			2Q3							

See notes at end of device type.

TABLE III. Group A inspection for device type 05

Symbol	MIL-STD-883 method	Case E,F,Z	Terminal conditions 1/ 1	2	3	4	5	6	7	8	9	10	11	12	13	14	15	16	Measured terminal	Test limits Subgp 12 T_A = 25°C Min	Max	Min	Max	Min	Max	Units
		Symbol	$\overline{1E}$	1A	1B	$\overline{1Q0}$	$\overline{1Q1}$	$\overline{1Q2}$	$\overline{1Q3}$	V_{SS}	$\overline{2Q3}$	$\overline{2Q2}$	$\overline{2Q1}$	$\overline{2Q0}$	2B	2A	$\overline{2E}$	V_{DD}								
		Test No.																								
t_{PHL1} & t_{PLH1}	3003 Fig 7	131	GND	GND	IN	OUT				GND					GND	GND	GND	10.0	1B to $\overline{1Q0}$	10	190					ns
		132		GND	IN		OUT												1B to $\overline{1Q1}$							
		133		IN	GND			OUT											1A to $\overline{1Q2}$							
		134		IN	GND	OUT													1A to $\overline{1Q0}$							
		135		10.0	IN		OUT												1B to $\overline{1Q1}$							
		136		10.0	IN				OUT										1B to $\overline{1Q3}$							
		137		IN	10.0			OUT											1A to $\overline{1Q2}$							
		138		IN	10.0				OUT										1A to $\overline{1Q3}$							
		139		GND	GND									OUT	IN				2B to $\overline{2Q0}$							
		140											OUT		IN				2B to $\overline{2Q1}$							
		141										OUT			GND	IN			2A to $\overline{2Q2}$							
		142												OUT	GND	IN			2A to $\overline{2Q0}$							
		143											OUT		IN	10.0			2B to $\overline{2Q1}$							
		144									OUT				IN	10.0			2B to $\overline{2Q3}$							
		145										OUT			10.0	IN			2A to $\overline{2Q2}$							
		146									OUT				10.0	IN			2A to $\overline{2Q3}$							
t_{PHL2} & t_{PLH2}		147	IN	GND	GND	OUT									GND	GND			$\overline{1E}$ to $\overline{1Q0}$	9	170					
		148		10.0	GND		OUT												$\overline{1E}$ to $\overline{1Q1}$							
		149		GND	10.0			OUT											$\overline{1E}$ to $\overline{1Q2}$							
		150		10.0	10.0				OUT										$\overline{1E}$ to $\overline{1Q3}$							
		151	GND	GND	GND									OUT			IN		$\overline{2E}$ to $\overline{2Q0}$							
		152											OUT			10.0			$\overline{2E}$ to $\overline{2Q1}$							
		153										OUT			10.0	GND			$\overline{2E}$ to $\overline{2Q2}$							
		154									OUT				10.0	10.0			$\overline{2E}$ to $\overline{2Q3}$							
t_{THL} & t_{TLH}	3004 Fig 7	155	IN			OUT									GND	GND	GND		$\overline{1Q0}$	5	100					
		156		10.0			OUT												$\overline{1Q1}$							
		157		GND	10.0			OUT											$\overline{1Q2}$							
		158		10.0	10.0				OUT										$\overline{1Q3}$							
		159	GND	GND	GND									OUT			IN		$\overline{2Q0}$							
		160											OUT			10.0			$\overline{2Q1}$							
		161										OUT			10.0	GND			$\overline{2Q2}$							
		162									OUT				10.0	10.0			$\overline{2Q3}$							

1/ Pins not designated may be High level logic, Low level logic or open. Exceptions are as follows: $V_{IC(pos)}$ tests, the V_{SS} terminal shall be open; $V_{IC(neg)}$ tests, the V_{DD} terminal shall be open; I_{SS} tests, the output terminals shall be open.

2/ The I_{SS} measurements shall be performed in sequence.

3/ The following timing sequence and input/output conditions shall apply: These tests require only a summary of attributes data.

Inputs Enable select			Outputs Device type 05			
$\overline{E}$	B	A	$\overline{Q3}$	$\overline{Q2}$	$\overline{Q1}$	$\overline{Q0}$
0	0	0	1	1	1	0
0	0	1	1	1	0	1
0	1	0	1	0	1	1
0	1	1	0	1	1	1
1	X	X	1	1	1	1

Input/output conditions

Test	V_{DD}	Input levels 1	Input levels 0	Output levels 1	Output levels 0
	Volts			Min	Max
V_{IH1} V_{IL1}	5.0	3.5V	1.5V	4.5V	0.5V
V_{IH2} V_{IL2}	10.0	7.0V	3.0V	9.0V	1.0V
V_{IH3} V_{IL3}	15.0	11.0V	4.0V	13.5V	1.5V

4/ The device manufacturer may, at his option, measure I_{IL} and I_{IH} at 25°C for individual input or measure all inputs together.

5/ See 4.4.1c.

6/ The Truth Table Tests shall be performed in sequence.

7/ The Truth Table Tests shall be performed at V_{IH} and $V_{DD} \leq$ 5 Vdc and $\geq$ 18 Vdc. L = V_{SS} +0.50 V maximum and H = V_{DD} -0.50 V minimum.

d. For class S devices, post dynamic burn-in, or class B devices, post static burn-in, electrical parameter measurements may, at the manufacturer's option, be performed separately or included in the final electrical parameter requirements.

4.2.1 Percent defective allowable (PDA).

a. The class S devices PDA shall be 5 percent for static burn-in and 5 percent for dynamic burn-in, based on the exact number of devices submitted to each separate burn-in.

b. Static burn-in I and II failures shall be cumulative for determining PDA.

c. The class B devices PDA shall be in accordance with MIL-M-38510 for static burn-in. Dynamic burn-in is not required.

d. Those devices whose measured characteristics after burn-in exceed the specified delta (Δ) limits or electrical parameter limits specified in table III, subgroup 1, are defective and shall be removed from the lot. The verified failures divided by the total number of devices in lot initially submitted to burn-in shall be used to determine the percent defective for the lot and the lot shall be accepted or rejected based on the specified PDA.

4.3 Qualification inspection. Qualification inspection shall be in accordance with MIL-M-38510. Inspections to be performed shall be those specified in method 5005 of MIL-STD-883 and herein for groups A, B, C, D and E inspections (see 4.4.1 through 4.4.5).

4.4 Quality conformance inspection. Quality conformance inspection shall be in accordance with MIL-M-38510 and as specified herein. Inspections to be performed shall be those specified in method 5005 of MIL-STD-883 and herein for groups A, B, C, D, and E inspections (see 4.4.1 through 4.4.5).

4.4.1 Group A inspection. Group A inspection shall be in accordance with table I of method 5005 of MIL-STD-883 and as follows:

a. Tests shall be performed in accordance with table II herein.

b. Subgroups 5 and 6 of table I of method 5005 of MIL-STD-883 shall be omitted.

c. Subgroup 4 (C_i measurement) shall be measured only for initial qualification and after process or design changes which may affect input capacitance. Capacitance shall be measured between the designated terminal and V_{SS} at a frequency of 1 MHz.

d. Subgroup 12 shall be added to the group A inspection requirements for class S devices using an LTPD of 15 and consist of the procedures, test conditions, and limits specified in table III.

e. At the manufacturer's option, test tapes may be programmed simultaneously for each identical section provided that each output is measured and each specified input combination is tested.

4.4.2 Group B inspection. Group B inspection shall be in accordance with table II of method 5005 of MIL-STD-883 and as follows:

a. Class S steady state life (accelerated) test circuits shall be submitted to the qualifying activity for approval. When the alternate steady state life test is used, the circuit on figure 6, or equivalent, shall be used.

b. A special subgroup shall be added using an LTPD of 15 for classes S and B, and measured only for initial qualification and after process or design changes. This subgroup shall consist of a high voltage test of the input protection circuits, V_{ZAP} (see 4.5.3).

c. End-point electrical parameters shall be as specified in table II herein and shall consist only of those subgroups specified in table IIa of test method 5005 of MIL-STD-883, and table II herein also. Delta limits shall apply only to subgroup 5 of group B inspections and shall consist of tests specified in table IV herein.

4.4.3 Group C inspection. Group C inspection shall be in accordance with table III of method 5005 of MIL-STD-883 and as follows:

a. End-point electrical parameters shall be as specified in table II herein. Delta limits shall apply only to subgroup 1 of group C inspection and shall consist of tests specified in table IV herein.

b. Steady-state life test (method 1005 of MIL-STD-883) conditions:

(1) Test condition D and as specified in 4.5.2 and as shown on figure 6, or equivalent.

(2) T_A = +125°C minimum.

(3) Test duration, 1,000 hours, except as permitted by appendix B of MIL-M-38510 and method 1005 of MIL-STD-883.

c. Subgroups 3 and 4 shall be added to the group C inspection requirements for class B devices, and shall consist of the tests, conditions, and limits as specified for subgroups 10 and 11 of group A.

4.4.4 Group D inspection. Group D inspection shall be in accordance with table IV of method 5005 of MIL-STD-883. End-point electrical parameters shall be as specified in table II herein.

4.4.5 Group E inspection. Group E inspection is required only for device types intended to be marked as radiation hardened (see 3.6.1). When group E testing is performed it shall be in accordance with table V of method 5005 of MIL-STD-883 and 4.5.5 herein.

4.5 Methods of inspection. Methods of inspection shall be specified as follows:

4.5.1 Voltage and current. All voltages given are referenced to the microcircuit V_{SS} terminal, unless otherwise specified. Currents given are conventional current and positive when flowing into the referenced terminal.

4.5.2 Burn-in and life test cool down procedures. When these tests are completed and prior to removal of bias voltages, the devices under test (DUT) shall be cooled to a temperature of 25° ±3°C; then, electrical parameter end-point measurements shall be performed.

TABLE IV. Delta limits 025°C.

Parameter 1/	Device types
I_{SS}	±10 nA
I_{OL1}	15%
I_{OH1}	15%

1/ Each of the above parameters shall be recorded before and after the required burn-in and life tests to determine delta's (Δ).

4.5.3 High voltage (V_{ZAP}) test or input protection circuits. All input terminals (up to a maximum of 4) of the DUT shall be subjected to a voltage pulse from a 100 pF source charged to 400 V. This destructive test shall be conducted as follows using the test circuit on figure 8.

a. Measure I_{IL} and I_{IH} at the inputs selected, as stated above, at 25°C. The test limit for each input tested shall be ±10 nA at the specified V_{DD}. Measure I_{SS} on the DUT at 25°C. The test limit for this measurement shall be increased a maximum of 20 percent of the specified I_{SS} table III limit at the specified V_{DD}.

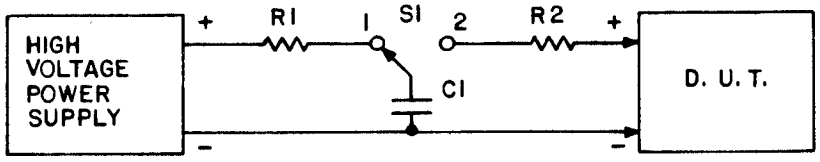

V_{ZAP} = 400 V minimum charge on C1
1 MΩ ≤ R1 ≤ 50 MΩ
R2 = 1.5 kΩ
C1 = 100 pF
S1 = Hg-wetted "bounceless" relay.

FIGURE 8. High voltage (V_{ZAP}) test circuit.

b. V_{ZAP} is applied to DUT in the following modes (see table V) by changing C1 to V_{ZAP} with S1 in position 1 and then switching to position 2.

TABLE V. Modes for high voltage test.

Mode	+ Terminal	- Terminal
1	V_{DD}	Input
2	Input	V_{SS}
3	Input	Associated Output

c. Within 24 hours repeat the I_{SS}, I_{IL}, and I_{IH} measurements on the same terminals as performed above. If a DUT exhibits leakage currents in excess of the specified limits after the V_{ZAP} test, it shall be classified as a failure.

4.5.4 Quiescent supply current (I_{SS} test). When performing quiescent supply current measurements (I_{SS}), the meter shall be placed so that all currents flow through the meter.

4.5.5 Radiation hardness assurance (RHA) testing. The RHA testing shall be performed in accordance with test procedures and sampling specified in table V of method 5005 of MIL-STD-883 and herein:

a. Before irradiation, selected samples shall be assembled in qualified packages and pass the governing electrical parameters (group A subgroup 1 at 25°C) and also be subjected to the threshold-voltage test in table VIII in order to calculate the delta threshold (ΔV_T) after irradiation.

b. The devices shall be subjected to a total radiation dose as specified in MIL-M-38510 for the radiation hardness assurance (RHA) level being tested, and meet the end point electrical parameters as defined in table VI at 25°C, after exposure. The start and completion of the end point electrical parameter measurements shall not exceed 2 hours following irradiation.

c. Threshold-voltage test circuit conditions shall be as specified in table VIII and figure 9. In situ and remote testing, the tests shall be performed with the devices biased in accordance with table VII and bias may be interrupted for up to 1 minute to remove devices to the remote bias fixture.

d. After irradiation, the devices shall pass the truth table test as specified in subgroup 7 in table III or if subgroup 7 is not required, then an equivalent truth table test shall be performed.

TABLE VI. Radiation hardening end-point electrical parameters at 25°C.

Parameter	All device types	V_{DD}
V_{TN}	0.3 V min	10 V
V_{TP}	2.8 V max	10 V
ΔV_T	1.4 V	10 V
I_{SS}	100 x max limit	18 V
t_{PLH}	1.35 x max limit	5 V
t_{PHL}	1.35 x max limit	5 V

TABLE VII. Bias during exposure to radiation.

Device type	Pin connections		
	V_{DD} = 10 V dc (through a 30 k to 60 k resistor)	V_{SS} = GND	V_{DD} = 10 V dc
01	1,2,3,21,22,23	12	14, 24
02	1,2,3,21,22,23	12	14, 24
03	1,2,3,4,5,10,11,12,13	8	16
04	1,2,3,13,14,15	8	16
05	1,2,3,13,14,15	8	16

Pins not designated are open or connected to 10 V dc through a 30- to 60 kilohm resistor.

4.6 Data reporting. When specified in the purchase order or contract, a copy of the following data, as applicable, shall be supplied.

a. Attributes data for all screening tests (see 4.2 and variables data for all static burn-in, dynamic burn-in, and steady state life tests (se 3.6).

b. A copy of each radiograph.

c. The quality conformance inspection data (see 4.4).

d. Parameter distribution data on parameters evaluated during burn-in (see 3.6).

e. Final electrical parmeters data (see 4.2c).

5. PACKAGING

5.1 Packaging requirements. The requirements for packaging shall be in accordance with MIL-M-38510.

6. NOTES

6.1 Intended use. Microcircuits conforming to this specification are intended for original equipment design applications and logisitic support of existing equipment.

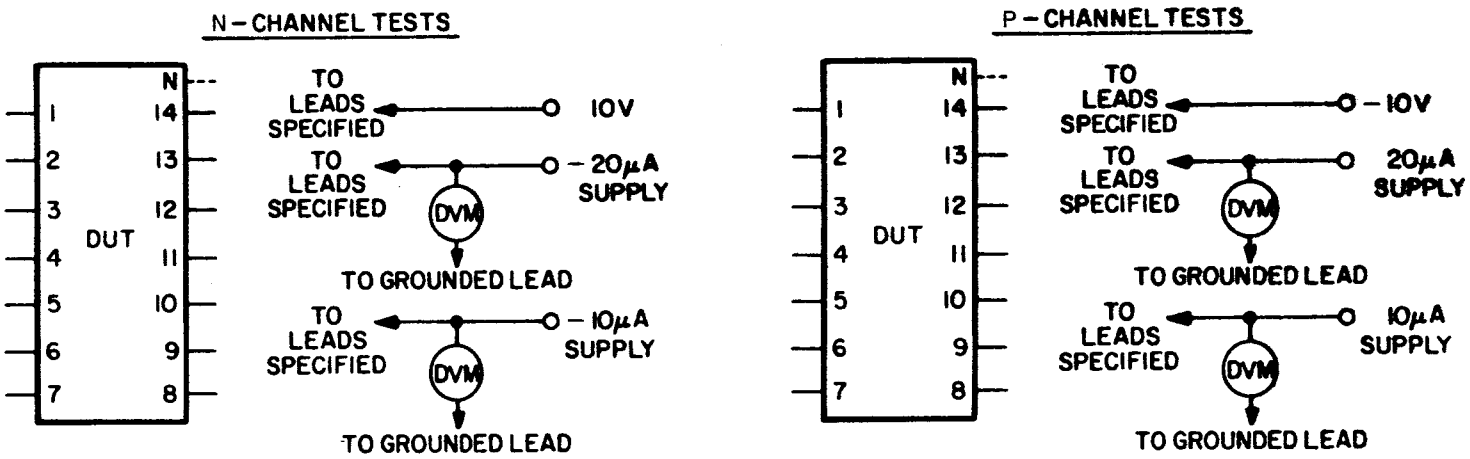

FIGURE 7. Threshold-voltage circuit.

TABLE VIII. Threshold - voltage test circuit conditions.

Device type	GND	10V	V_{TN} measured at -20 μA supply	V_{TN} measured at -10 μA supply	GND	-10V	V_{TP} measured at 20 μA supply	V_{TP} measured at 10 μA supply
01	2	24	3,12,21-23		1	2,3,12,21-23	24	
02	1	24	2,3,12,21-23		1	2,3,12,21-23	24	
03	1	2-5,10-13, 16		8	1	2-5,8,10,11, 12,13		16
04	1	16		2,3,8, 13-15	1	2,3,8, 13-15		16
05	1	16		2,3,8, 13-15	1	2,3,8, 13-15		16

6.2 Ordering data. The acquisition document should specify the following:

a. Complete part number (see 1.2).

b. Requirements for delivery of one copy of the quality conformance inspection data pertinent to the device inspection lot to be supplied with each shipment by the device manufacturer, if applicable.

c. Requirements for certificate of compliance, if applicable.

d. Requirements for notification of change of product or process to the contracting activity in addition to notification to the qualifying activity, if applicable.

e. Requirements for failure analysis (including required test condition of method 5003 of MIL-STD-883), corrective action and reporting of results, if applicable.

f. Requirements for product assurance options.

g. Requirements for special carriers, lead lengths, or lead forming, if applicable. These requirements shall not affect the part number. Unless otherwise specified, these requirements shall not apply to direct purchase by or direct shipment to the Government.

h. Requirements for "JAN" marking.

i. Requirements for total dose radiation testing (see 3.6.1 and 4.5.5), if applicable.

6.3 Abbreviations, symbols, and definitions. The abbreviations, symbols, and definitions used herein are defined in MIL-M-38510, MIL-STD-1331, and as follows:

C_i	Input terminal-to-V_{SS} capacitance.
GND	Ground zero voltage potential.
I_{SS}	Quiescent supply current.
T_A	Free air temperature.
V_{DD}	Positive supply voltage.
V_{SS}	Negative supply voltage.
V_{ZAP}	Input test voltage.

6.4 Logistic support. Lead materials and finishes (see 3.3) are interchangeable. Unless otherwise specified, microcircuits acquired for Government logistic support will be acquired to device class S for National Aeronautics and Space Administration or class B for Department of Defense (see 1.2.2), lead finish C (see 3.3). Longer length leads and lead forming shall not affect the part number.

6.5 Substitutability. The cross-reference information below is presented for the convenience of users. Microcircuits covered by this specification will functionally replace the listed generic-industry type. Generic-industry microcircuit types may not have equivalent operational performance characteristics across military temperature ranges or reliability factors equivalent to MIL-M-38510 device types and may have slight physical variations in relation to case size. The presence of this information shall not be deemed as permitting substitution of generic-industry types for MIL-M-38510 types or as a waiver of any of the provisions of MIL-M-38510.

Military device type	Generic-industry type	DESC drawing
01	4514B	7703501
02	4515B	7703201
03	4532B	
04	4555B	7704701
05	4556B	7704801

6.6 Handling. MOS devices must be handled with certain precautions to avoid damage due to accumulation of static charge. Input protective devices have been designed in the chip to minimize the effect of this static build up. However, the following handling practices are recommended:

a. Devices should be handled on benches with conductive and grounded surface.

b. Ground test equipment and tools.

c. Do not handle devices by the leads.

d. Store devices in conductive foam or carriers.

e. Avoid use of plastic, rubber, or silk in MOS areas.

f. Maintain relative humidity above 50 percent, if practical.

6.7 Changes from previous issue. Asterisks are not used in this revision to identify changes with respect to the previous issue, due to the extensiveness of the changes.

Custodians:
Army - ER
Navy - EC
Air Force - 17
NASA - NA

Review activities:
Army - MI
Air Force - 11, 19, 85, 99
DLA - ES

User activities:
Army - SM, AR
Navy - AS, CG, OC, MC, SH

Agent:
DLA - ES

Preparing activity:
NASA - NA

(Project 5962-0639-4)