MIL-M-38510/231B
2 April 1982
~~SUPERSEDING~~
MIL-M-38510/231A
3 July 1980

MILITARY SPECIFICATION

MICROCIRCUITS, DIGITAL, SCHOTTKY TTL, 1024 BIT RANDOM ACCESS MEMORY (RAM), MONOLITHIC SILICON

This specification is approved for use by all Departments and Agencies of the Department of Defense.

1. SCOPE

1.1 Scope. This specification covers the detail requirements for monolithic silicon, Schottky TTL, static, 1024 bit random access memory microcircuits. Three product assurance classes and a choice of case outline/lead finish are provided for each type and are reflected in the complete part number.

1.2 Part number. The part number shall be in accordance with MIL-M-38510, and as specified herein.

1.2.1 Device type. The device type shall be as follows:

Device type	Circuit	Access time
01	1024X1 bit RAM, uncommitted collector	60 ns (t_{WHAC} = 5 ns, t_{AVWL} = 15 ns)
02	1024X1 bit RAM, three-state output	60 ns (t_{WHAC} = 5 ns, t_{AVWL} = 15 ns)
03	1024X1 bit lower power RAM, uncommitted collector	70 ns
04	1024X1 bit lower power RAM, three-state output	70 ns
05	1024X1 bit RAM, uncommitted collector	60 ns (t_{WHAC} = 10 ns, t_{AVWL} = 10 ns)
06	1024X1 bit RAM, three-state output	60 ns (t_{WHAC} = 10 ns, t_{AVWL} = 10 ns)
07	1024X1 bit Schottky RAM, uncommitted collector	45 ns
08	1024X1 bit Schottky RAM, three-state output	45 ns
09	256X4 bit RAM, uncommitted collector	60 ns
10	256X4 bit RAM, three-state output	60 ns
11	256X4 bit low power RAM, uncommitted collector	75 ns
12	256X4 bit low power RAM, three-state output	75 ns
13	1024X1 bit low power RAM, three-state output	50 ns
14	256X4 bit RAM, three-state output	45 ns
15	256X4 bit low power RAM, three-state output	55 ns

1.2.2 Device class. The device class shall be the product assurance level as defined in MIL-M-38510.

Beneficial comments (recommendations, additions, deletions) and any pertinent data which may be of use in improving this document should be addressed to: Rome Air Development Center (RBE-2), Griffiss AFB, NY 13441, by using the self-addressed Standardization Document Improvement Proposal (DD Form 1426) appearing at the end of this document or by letter.

1.2.3 Case outline. The case outline shall be designated as follows:

Letter	Case outline (see MIL-M-38510, appendix C)
E	D-2 (16-lead, 1/4" x 7/8"), dual-in-line package
F	F-5 (16-lead, 1/4" x 3/8"), flat package
W	D-7 (22-lead, 3/8" x 1 1/8"), dual-in-line package
X	See figure 1 (24-lead, 3/8" x 3/8"), flat package
Y	C-3 (24 terminal, .400" x .400"), sq. chip carrier

1.3 Absolute maximum ratings.

Supply voltage range	-0.5 V to +7.0 V
Input voltage range	-0.5 V to +5.5 V
Storage temperature	-65° to +165°C
Maximum power dissipation (P_D) 1/:	
Device types 01,02,05,06,07,08,09,10,14	935 mW
Device types 03,04,13	413 mW
Device types 11, 12, 15	495 mW
Voltage applied to outputs (output high)	-0.5 V to +5.5 V
Output current (output low)	+20 mA
Input current	-12 mA to +5.0 mA
Lead temperature (soldering, 10 seconds)	300°C
Thermal resistance, junction-to-case (θ_{JC}):	
Case F, X	30°C/W
Case E, W	30°C/W
Case Y	15°C/W
Junction temperature (T_J)	165°C

1.4 Recommended operating conditions.

Supply voltage	4.5 V minimum to 5.5 V maximum
Minimum high level input voltage (V_{IH})	2.1 V
Maximum low level input voltage (V_{IL})	0.8 V
Case operating temperature range	-55° to +125°C

2. APPLICABLE DOCUMENTS

2.1 Government specifications and standards. Unless otherwise specified, the following specifications and standards, of the issue listed in that issue of the Department of Defense Index of Specifications and Standards specified in the solicitation, form a part of this specification to the extent specified herein.

SPECIFICATION

MILITARY

MIL-M-38510 - Microcircuits, General Specification for.

STANDARD

MILITARY

MIL-STD-883 - Test Methods and Procedures for Microelectronics.

(Copies of specifications, standards, handbooks, drawings, and publications required by manufacturers in connection with specific acquisition functions should be obtained from the contracting activity or as directed by the contracting officer.)

2.2 Order of precedence. In the event of a conflict between the text of this specification and the references cited herein, the text of this specification shall take precedence.

3. REQUIREMENTS

1/ Must withstand the added P_D due to short circuit test (e.g., I_{OS}).

TABLE I. Electrical performance characteristics.

Test	Symbol	Conditions 1/		Device type	Limits Min	Limits Max	Unit
High-level output voltage	V_{OH}	V_{CC} = 4.5 V, V_{IN} = 2.1 V I_{OH} = -5.2 mA		02,04,06,08, 10,12,13,14,15	2.4		V
Low-level output voltage	V_{OL}	V_{CC} = 4.5 V V_{IN} = 0.8 V	I_{OL} = 16 mA	01-08, 13		0.45	V
			I_{OL} = 8 mA	09-12,14,15			
High-level input current	I_{IH1}	V_{CC} = 5.5 V V_{IN} = 5.5 V		All		40	μA
Low-level input current	I_{IL}	V_{CC} = 5.5 V V_{IN} = 0.45 V		01-08, 13	-1.0	-400	μA
				09-12,14,15	-10.0	-300	
Output leakage	I_{CEX}	V_{CC} = 5.5 V	V_{OH} = 5.5 V	01,05		100	μA
			V_{OH} = 4.5 V	03,07,09,11			
Output current, short circuit to ground	I_{OS}	V_{CC} = 5.5 V V_{OUT} = GND 2/		02,04,06,08,13	-20	-100	mA
				10,12,14,15	-10	-70	
High impedance (off-state) output high current	I_{OHZ}	V_{CC} = 5.5 V	V_{OH} = 2.4 V	04,08,10,12,13, 14,15		50	μA
			V_{OH} = 4.5 V	02,06		50	μA
High impedance (off-state) output low current	I_{OLZ}	V_{CC} = 5.5 V	V_{OL} = 0.45 V	02,04,06,08,10, 12,13,14,15		-50	μA
Input diode clamping voltage	V_{IC}	V_{CC} = 5.5 V	I_{IN} = -12 mA	01,02,05,06		-1.5	V
		T_A = 25°C	I_{IN} = -10 mA	03,04,07, 08-15			
Supply current	I_{CC}	V_{CC} = 5.5 V 3/		01,02,05-10,14		170	mA
				03,04,13		75	
				11,12,15		90	
Address access time	TAVQV	V_{CC} = 4.5 V and 5.5 V C_L = 30 pF See figure 6		01,02,05,06,09, 10		60	ns
				03,04		70	
				07,08,14		45	
				11,12		75	
				13		50	
				15		55	

See footnotes at end of table.

TABLE I. Electrical performance characteristics - Continued.

Test	Symbol	Conditions 1/	Device type	Limits Min	Limits Max	Unit
Chip select time	TSVQV	V_{CC} = 4.5 V and 5.5 V C_L = 30 pF See figure 6	01-06, 09-12		45	ns
			07,08,13,14		35	
			15		40	
Chip select output disable time	TSCQV		01,03,05		50	ns
			07		35	
			09,11		45	
Write recovery time	TWHQV		01,02,05,06,09, 10,11,12		50	ns
			03,04		55	
			07,08		40	
			13,14		40	
			15		45	
Output select time	TELQV		14		35	ns
			15		40	
Output select disable time to high Z	TEHQZ		14		35	ns
			15		40	
Write setup time	TWLQV		01,03,05,09,11		45	ns
			07		35	
Write pulse width	TWLWH		01,02,05,06,09, 10,15	40		ns
			03,04	50		
			07,08,13,14	35		
			11,12	55		
Data setup time prior to write	TDCWL		01,02,05,06-12, 14	5		ns
			03,04,13,15	10		
Data hold time after write	TWHDC		01,02,05-15	5		ns
			03,04	10		

See footnotes at end of table.

TABLE I. Electrical performance characteristics - Continued.

Test	Symbol	Conditions 1/	Device type	Limits Min	Limits Max	Unit
Address setup time prior to write	TAVWL	V_{CC} = 4.5 V and 5.5 V C_L = 30 pF See figure 6	01,02	15		ns
			03-06,09-13,15	10		
			07,08,14	5		
Address hold time after write	TWHAC		01,02,07,08,13,14,15	5		ns
			03-06,09-12	10		
Chip select setup time prior to write	TSVWL		01,02,05-12,14	5		ns
			03,04,13,15	10		
Chip select hold time after write	TWHSC		01,02,05-15	5		ns
			03,04	10		
Write enable time to high impedance	TWLQZ		02,04,06,10,12,13,14,15		45	ns
			08		35	
Chip select disable time to high impedance	TSCQZ		01,05,02,04,06		50	ns
			07,08,13,14		35	
			09,10,11,12		45	
			15		40	

1/ Complete terminal conditions shall be as specified in table III.

2/ Not more than one output shall be shorted at a time.

3/ I_{CC} is measured with all inputs grounded for device types 01-08 and 13; and all inputs and outputs open for device types 09-12, 14, and 15.

3.1 Detail specification. The individual item requirements shall be in accordance with MIL-M-38510, and as specified herein.

3.2 Design, construction, and physical dimensions. The design, construction, and physical dimensions shall be as specified in MIL-M-38510 and herein.

3.2.1 Terminal connections. The terminal connections shall be as specified on figure 2.

3.2.2 Truth tables. The truth tables shall be as specified on figure 3.

3.2.3 Logic diagram. The logic diagram shall be as specified on figure 4.

3.2.4 Functional tests. The functional tests used to test these devices are contained in table III. If the test patterns cannot be implemented due to test equipment limitations, then alternate test patterns to accomplish the same results shall be submitted to the qualifying activity for approval.

3.2.5 Case outlines. The case outlines shall be as specified in 1.2.3.

3.3 Lead material and finish. The lead material and finish shall be in accordance with MIL-M-38510 (see 6.5).

3.4 Electrical performance characteristics. The electrical performance characteristics are as specified in table I, and apply over the full recommended case operating temperature range, unless otherwise specified.

3.5 Electrical test requirements. The electrical test requirements for each device class shall be the subgroups specified in table II. The electrical tests for each subgroup are described in table III.

3.6 Marking. Marking shall be in accordance with MIL-M-38510. At the option of the manufacturer, marking of the country of origin may be omitted from the body of the microcircuit, but shall be retained on the initial container.

3.7 Microcircuit group assignment. The devices covered by this specification shall be in microcircuit group number 13 (see MIL-M-38510, appendix E).

TABLE II. Electrical test requirements.

MIL-STD-883 test requirements	Subgroups (see table III)		
	Class S devices	Class B devices	Class C devices
Interim electrical parameters (pre burn-in) (method 5004)	1	1	None
Final electrical test parameters (method 5004)	1*,2,3,7, 9,10,11	1*2,3,7, 9	1,7
Group A test requirements (method 5005)	1,2,3,7, 8,9,10,11	1,2,3,7, 9,10,11	1,2,3,7, 9
Group B electrical parameters (method 5005, subgroup 5)	1,2,3,7, 8,9,10,11	None	None
Group C end-point electrical parameters (method 5005)	NA	1,2,3	1
Additional electrical subgroups for group C periodic inspection	None	None	10,11
Group D end-point electrical parameters (method 5005)	1,2,3	1,2,3	1

*PDA applies to subgroup 1 (see 4.2c).

4. QUALITY ASSURANCE PROVISIONS

4.1 Sampling and inspection. Sampling and inspection procedures shall be in accordance with MIL-M-38510 and methods 5005 and 5007, as applicable, of MIL-STD-883, except as modified herein.

4.2 Screening. Screening shall be in accordance with method 5004 of MIL-STD-883, and shall be conducted on all devices prior to qualification and quality conformance inspection. The following additional criteria shall apply:

a. Burn-in test (mthod 1015 of MIL-STD-883).

(1) Test condition D or E, using the circuit shown on figure 5, or equivalent.

(2) T_A = 125°C minimum.

b. Interim and final electrical tests shall be as specified in table II, except interim electrical tests prior to burn-in are optional at the discretion of the manufacturer.

c. The percent defective allowable (PDA) for class S devices shall be as specified in MIL-M-38510. The PDA for class B devices shall be 10 percent based on failures from group A, subgroup 1 tests after cooldown as the final electrical test in accordance with method 5004 of MIL-STD-883, and with no intervening electrical measurements. If interim electrical tests are performed prior to burn-in, failures resulting from pre burn-in screening may be excluded from the PDA. If interim electrical tests prior to burn-in are omitted, then all screening failures shall be included in the PDA. The verified failures of group A, subgroup 1, after burn-in divided by the total number of devices submitted for burn-in in that lot shall be used to determine the percent defective for that lot, and the lot shall be accepted or rejected based on the PDA for the applicable device class.

4.3 Qualification inspection. Qualification inspection shall be in accordance with MIL-M-38510. Inspections to be performed shall be those specified in method 5005 of MIL-STD-883 and herein for groups A, B, C, and D inspections (see 4.4.1 through 4.4.4).

4.3.1 Qualification extension. When authorized by the qualifying activity, for qualification inspection, if a manufacturer qualifies to a faster device type which is manufactured identically to a slower device type on this specification, then the slower device type may be part I qualified by conducting only group A electrical tests and any electricals specified as additional group C subgroups and submitting data in accordance with MIL-M-38510, appendix D (i.e. groups B, C, and D tests are not required).

4.4 Quality conformance inspection. Quality conformance inspection shall be in accordance with MIL-M-38510. Inspections to be performed shall be those specified in method 5005 of MIL-STD-883 and herein for groups A, B, C, and D inspections (see 4.4.1 through 4.4.4).

4.4.1 Group A inspection. Group A inspection shall be in accordance with table I of method 5005 of MIL-STD-883 and as follows:

a. Test requirements shall be as specified in table II herein.

b. Subgroups 4, 5, and 6 shall be omitted.

4.4.2 Group B inspection. Group B inspection shall be in accordance with table II of method 5005 of MIL-STD-883 and as follows:

a. For class S the electrical tests shall be as specified in table II herein.

b. Steady state life test for class S devices shall be in accordance with table IIa of method 5005 of MIL-STD-883 using a circuit submitted to the qualifying activity for approval. If the alternate burn-in conditions are used, the circuit on figure 5 or equivalent shall be used.

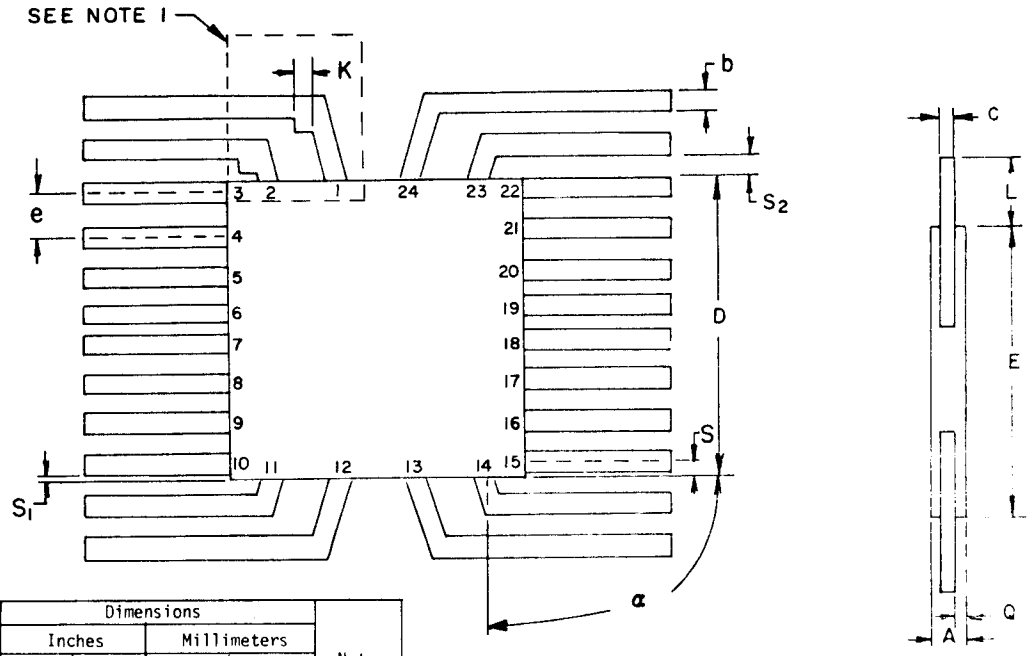

Symbol	Dimensions				Notes
	Inches		Millimeters		
	Min	Max	Min	Max	
A	.07	.085	1.8	2.16	
b	.016	.018	.41	.46	5
c	---	.005	---	.12	5
D	.37	.38	9.4	9.6	3
D_1	---	.4	---	10.	3
E	.37	.38	9.4	9.6	
E_1	---	.4	---	10.	3
e	.050 BSC		1.27 BSC		4,6
k	.015 TYP		.38 TYP		9
L	---	.31	---	7.9	
Q	.025	.04	.64	1.02	2
S	.008	.020	.20	.51	7
S_1	.000	---	.00	---	8
S_2	.023	.033	.58	.84	10
α		90°		90°	11,12

NOTES:
1. Index area; a notch or a pin one identification mark shall be located adjacent to pin one and shall be located within the shaded area shown. The manufacturer's identification shall not be used as a pin one identification mark. Alternatively, a tab (dimension k) may be used to identify pin one.
2. Dimension Q shall be measured at the point of exit of the lead from the body. Dimension Q shall be .0085 (.216 mm) minimum when lead finish A is applied.
3. This dimension allows for off-center lid, meniscus and glass overrun.
4. The basic pin spacing is .050 (1.25 mm) between centerlines. Each pin centerline shall be located within ±.005 (.13 mm) of its exact logitudinal position relative to pins 1 and 24.
5. All leads - Increase maximum limit by .003 (.08 mm) measured at the center of the flat, when lead finish A is applied.
6. Twenty-two spaces.
7. Applies to all four corners (leads number 3, 10, 15, and 22).
8. Dimension S_1 (see 40.3) may be .000 (.00 mm) if leads number 3, 10, 15, and 22 bend toward the cavity of the package within one leads width from the point of entry of the lead into the body. 40.5 shall apply for bottom or side brazed lead configurations.
9. Optional, see note 1. If a pin one identification mark is used in addition to this tab, the minimum limit of dimension k does not apply.
10. Applies to leads number 2, 11, 14, and 23.
11. Lead configuration is optional within dimension E except dimensions b and c apply (see 40.2 of this appendix).
12. Applies to leads number 1, 2, 11, 12, 13, 14, 23, and 24.

FIGURE 1. Case outline X (24 lead 3/8" x 3/8" flat pack).

Device types 01, 02, 03, 04, 05, 06, 07, 08 and 13.

Cases E and F

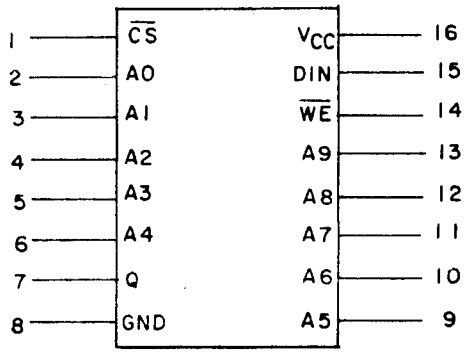

Device types 09, 10, 11, 12, 14 and 15.

Case W

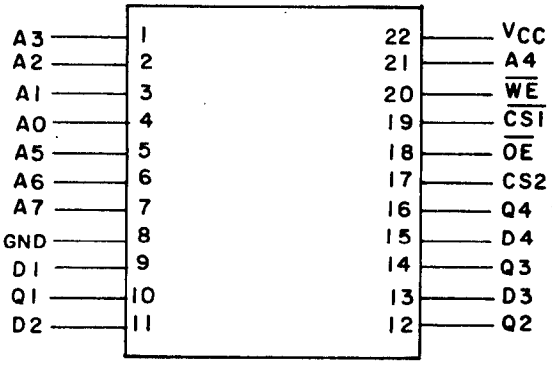

Case Y

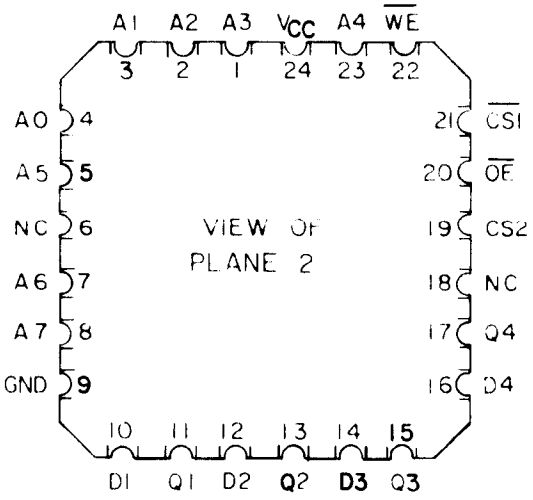

OPTION A WITH ACTIVE TERMINALS ON PLANE 1

FIGURE 2. Terminal connections.

Device types 09, 10, 11, 12, 14 and 15.

Case X

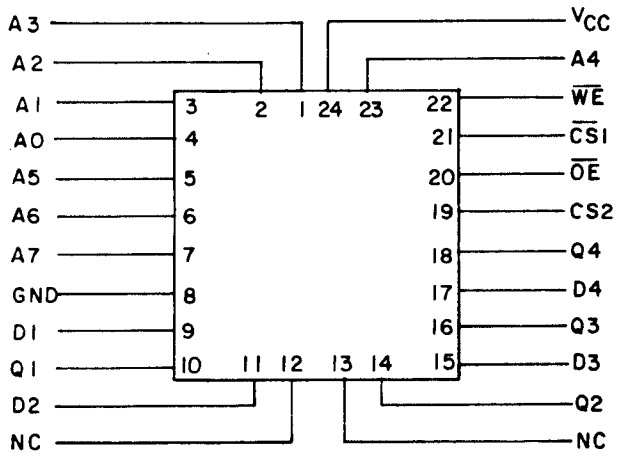

FIGURE 2. Terminal connections - Continued.

Device types 01, 03, 05 and 07

Inputs			Output	Mode
$\overline{CS}$	$\overline{WE}$	D_{IN}	Open collector	
H	X	X	H	Not selected
L	L	L	H	Write "0"
L	L	H	H	Write "1"
L	H	X	D_{OUT}	Read

H = High voltage level
L = Low voltage level
X = Don't care (high or low)

Device types 02, 04, 06, 08 and 13

Inputs			Output	Mode
$\overline{CS}$	$\overline{WE}$	D_{IN}	Q	
H	X	X	High Z	Not selected
L	L	L	High Z	Write "0"
L	L	H	High Z	Write "1"
L	H	X	Q	Read

H = High voltage level
L = Low voltage level
X = Don't care (high or low)

FIGURE 3. Truth tables.

Device types 09 and 11

Inputs					Outputs	
$\overline{OE}$ Pin 18	$\overline{CS_1}$ Pin 19	CS_2 Pin 17	$\overline{WE}$ Pin 20	D_1 - D_4 Pins 9, 11, 13, 15	Open collector	MODE
X	H	X	X	X	High	Not Selected
X	X	L	X	X	High	Not Selected
L	L	H	H	X	Q_1 - Q_4	Read Stored Data
X	L	H	L	L	High	Write "0"
X	L	H	L	H	High	Write "1"
H	L	H	H	X	High	Output Disabled
H	L	H	L	L	High	Write "0" (Output Disabled)
H	L	H	L	H	High	Write "1" (Output Disabled)

H = High Voltage, L = Low Voltage, X = Don't Care (High or Low).

Device types 10, 12, 14 and 15

Inputs					Outputs	
$\overline{OE}$ Pin 18	$\overline{CS_1}$ Pin 19	CS_2 Pin 17	$\overline{WE}$ Pin 20	D_1 - D_4 Pins 9, 11, 13, 15	3-State	Mode
X	H	X	X	X	High Z	Not Selected
X	X	L	X	X	High Z	Not Selected
L	L	H	H	X	Q_1 - Q_4	Read Stored Data
X	L	H	L	L	High Z	Write "0"
X	L	H	L	H	High Z	Write "1"
H	L	H	H	X	High Z	Output Disabled
H	L	H	L	L	High Z	Write "0" (Output Disabled)
H	L	H	L	H	High Z	Write "1" (Output Disabled)

H = High Voltage, L = Low Voltage, X = Don't Care (High or Low), High Z = High Impedance

FIGURE 3. Truth tables - Continued.

Device types 01, 03, 05 and 07

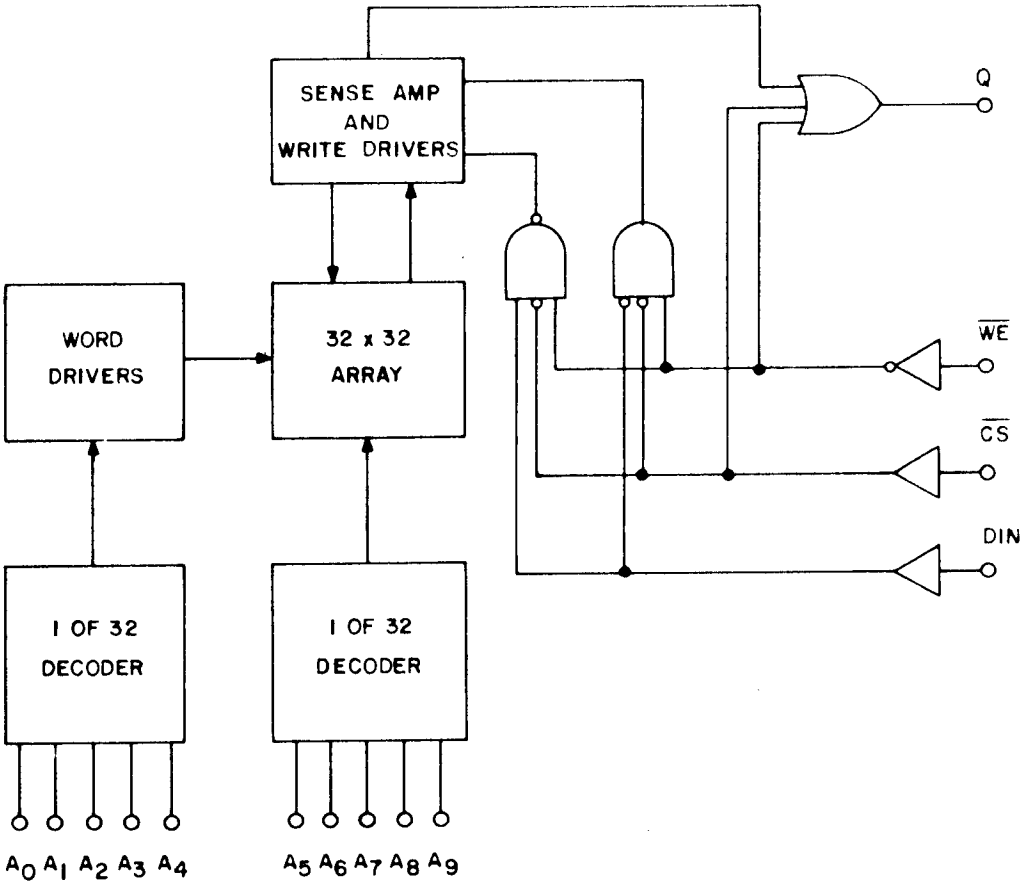

FIGURE 4. Logic diagram.

Device types 02, 04, 06, 08 and 13.

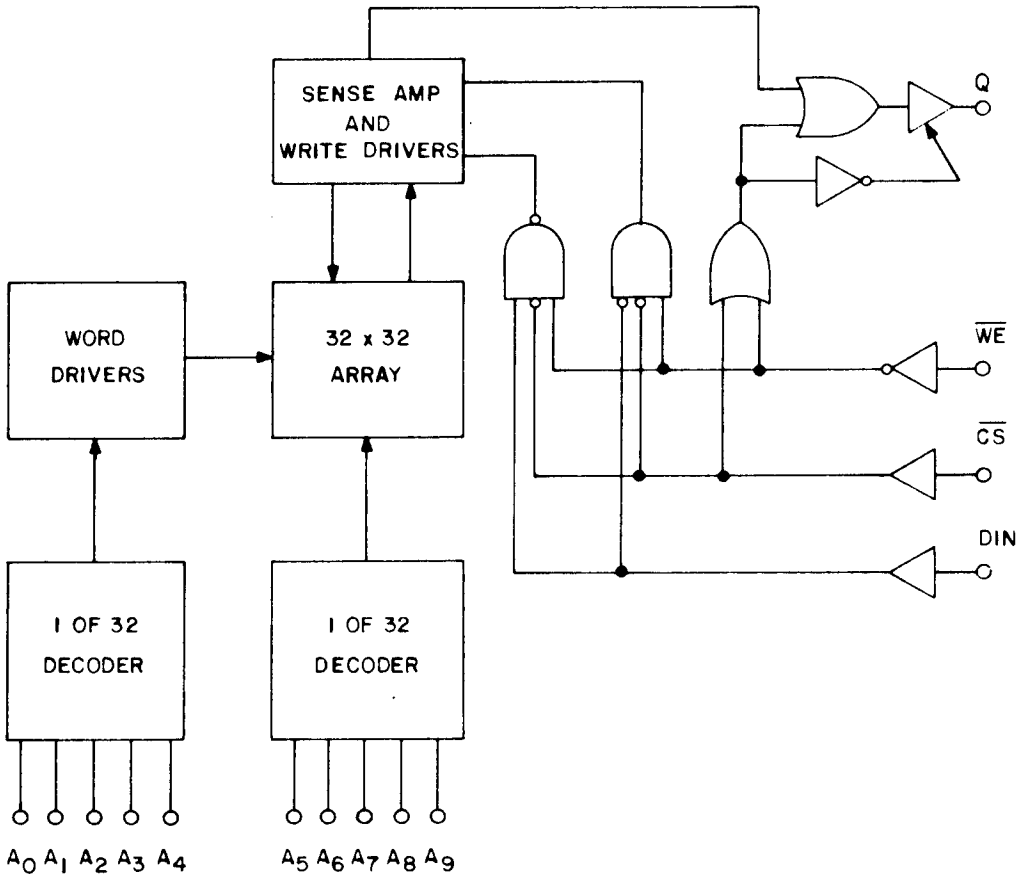

FIGURE 4. Logic diagram - Continued.

Device types 09, 10, 11, 12, 14 and 15.

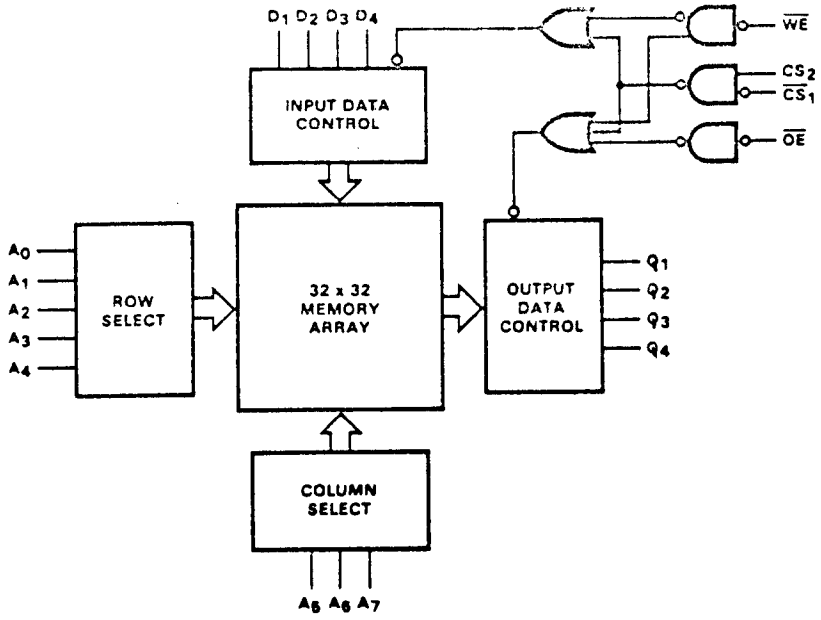

FIGURE 4. Logic diagram - Continued.

Device types 01-08 and 13.

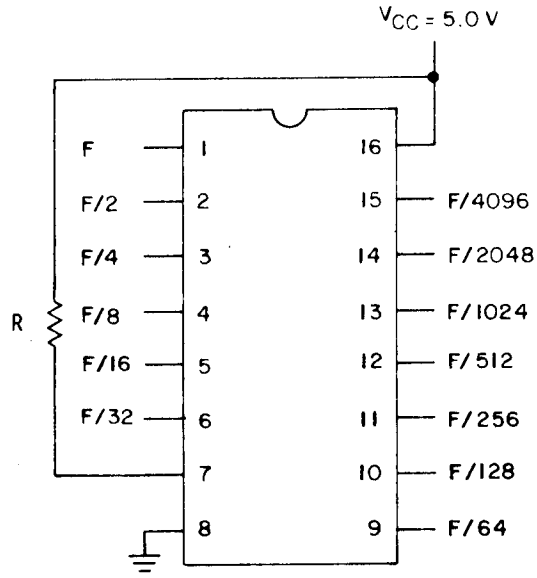

NOTES:
1. R = 300Ω ±5%.
2. V_{CC} shall be high enough to insure that 5.0 V minimum is present at V_{CC} device terminal.
3. All pulse generators have the following characteristics: $V_{IH} \geq 2.1$ V, $V_{IL} \leq 0.8$ V, duty cycle = 50 ±15% and F = 100 kHz minimum.

FIGURE 5. Burn-in and steady state life test circuit.

Device types 09, 10, 11, 12, 14 and 15.

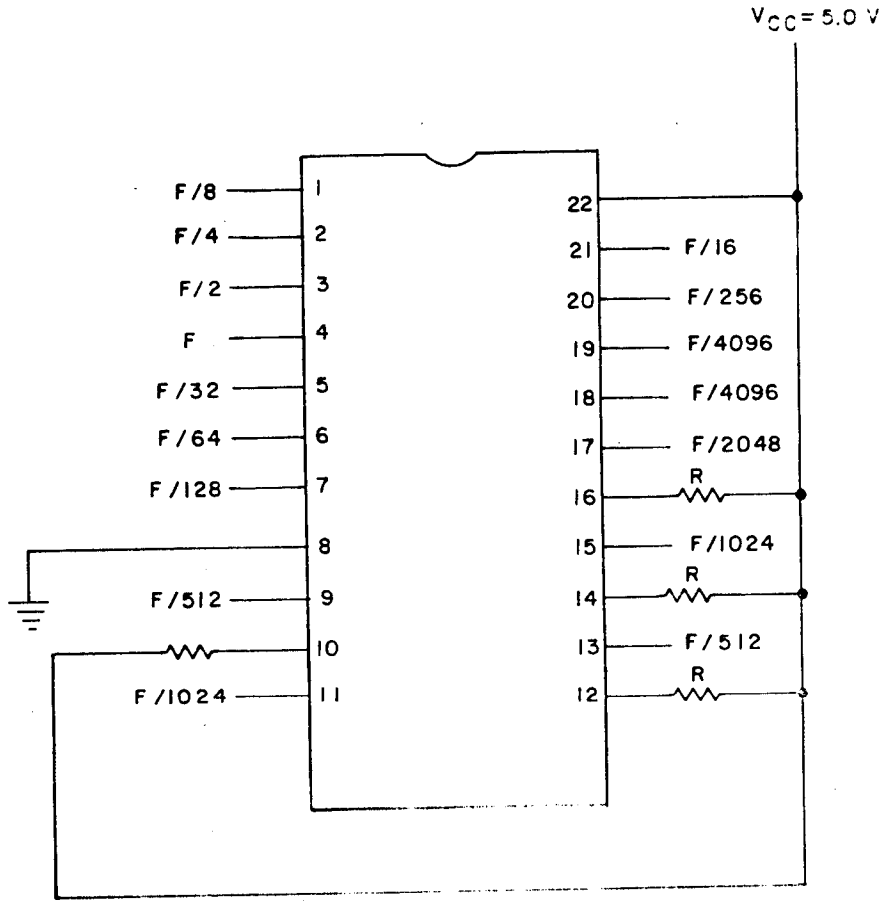

NOTES:
1. R = 600Ω ±5%.
2. V_{CC} shall be high enough to insure that 5.0 V minimum is present at V_{CC} device terminal.
3. All pulse generators have the following characteristics: $V_{IH} \geq 3.0$ V, $V_{IL} \leq 0.4$ V, duty cycle = 50 ±15% and F = 100 kHz minimum.

FIGURE 5. Burn-in and steady state life test circuit - Continued.

Device types 01-08 and 13.

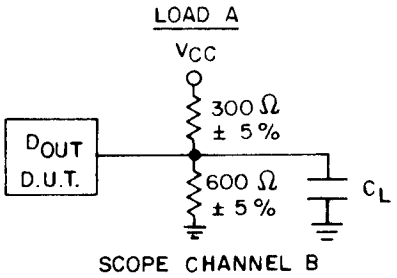

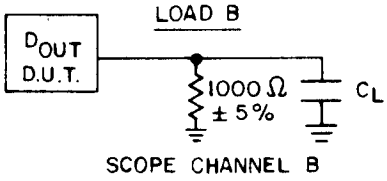

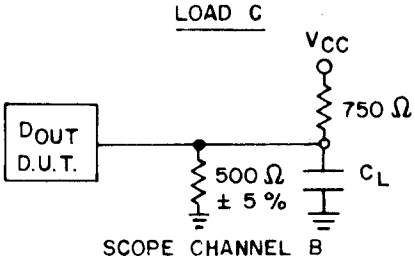

Device types 09, 11, 14 and 15.

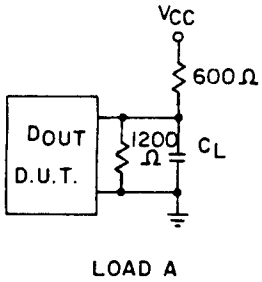

Device types 10, 12, 14 and 15.

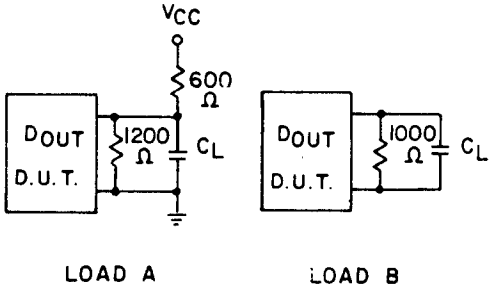

INPUT PULSES

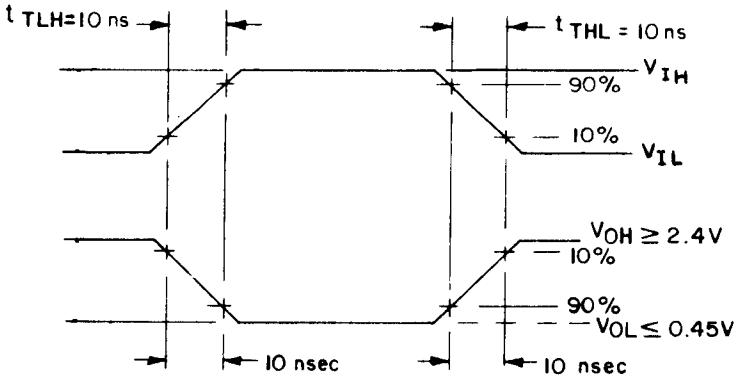

NOTES:
1. Use load circuit A in transitions between logic levels and from high Z state to a logic low state.
2. Use load circuit B in transitions from high Z state to logic high state.
3. Use load circuit C in transitions from a logic level to the high Z state.
4. C_L = 30 pF ±5% including wiring and probe capacitance.

FIGURE 6. Switching time load circuits, test conditions and waveforms.

Device types 01, 03, 05 and 07

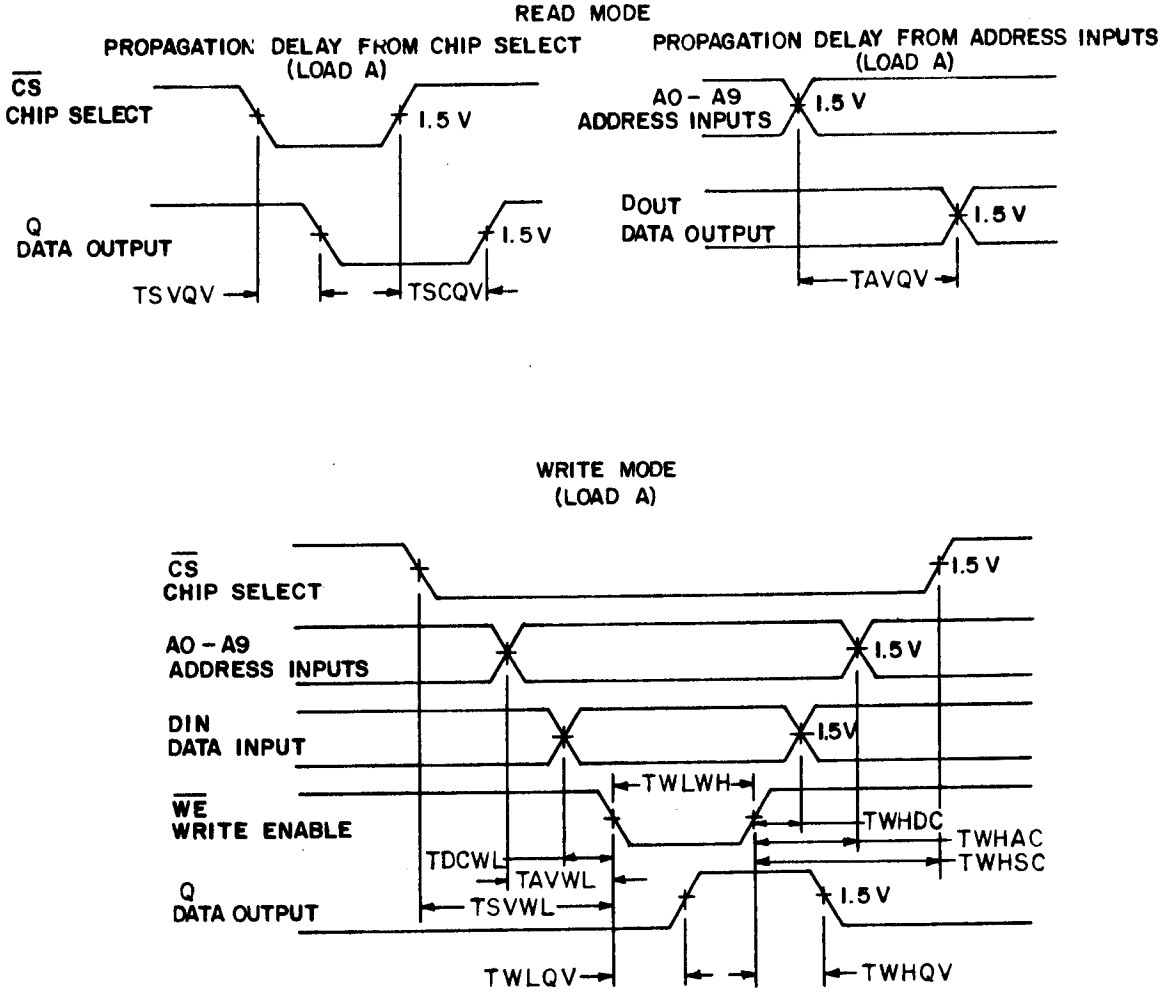

FIGURE 6. Switching time load circuits, test conditions and waveforms - Continued.

Device types 02, 04, 06, 08 and 13.

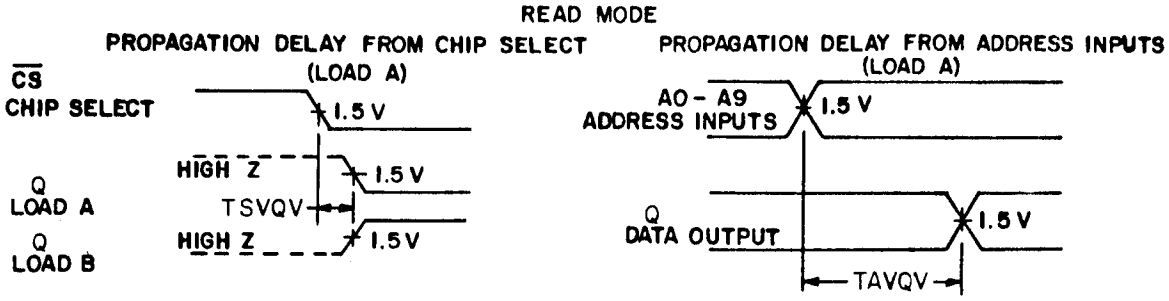

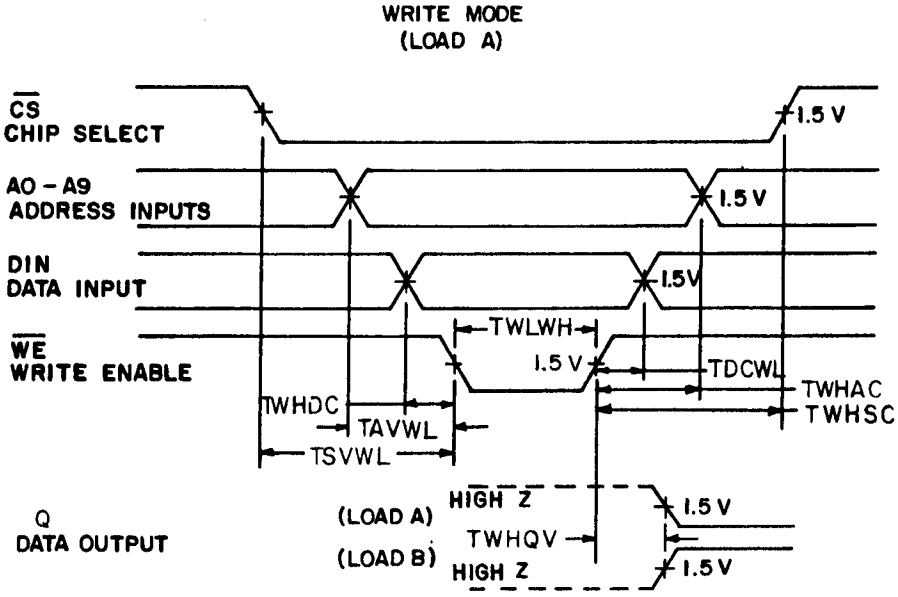

FIGURE 6. Switching time load circuits, test conditions and waveforms - Continued.

Device types 02, 04, 06, 08 and 13

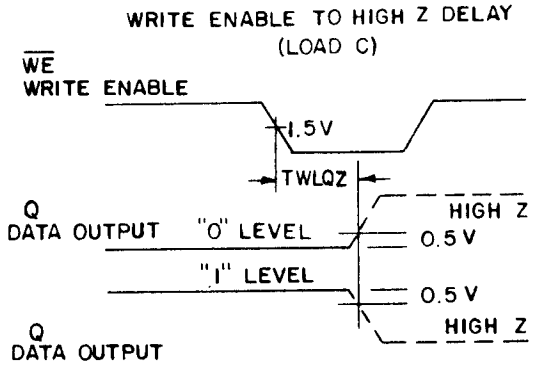

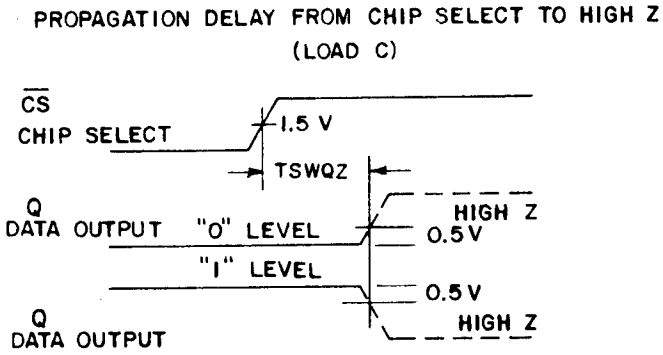

(All TXXXZ parameters are measured at a delta of 0.5 V from the logic level and using load C.)

FIGURE 6. Switching time load circuits, test conditions and waveforms - Continued.

Device types 09 and 11

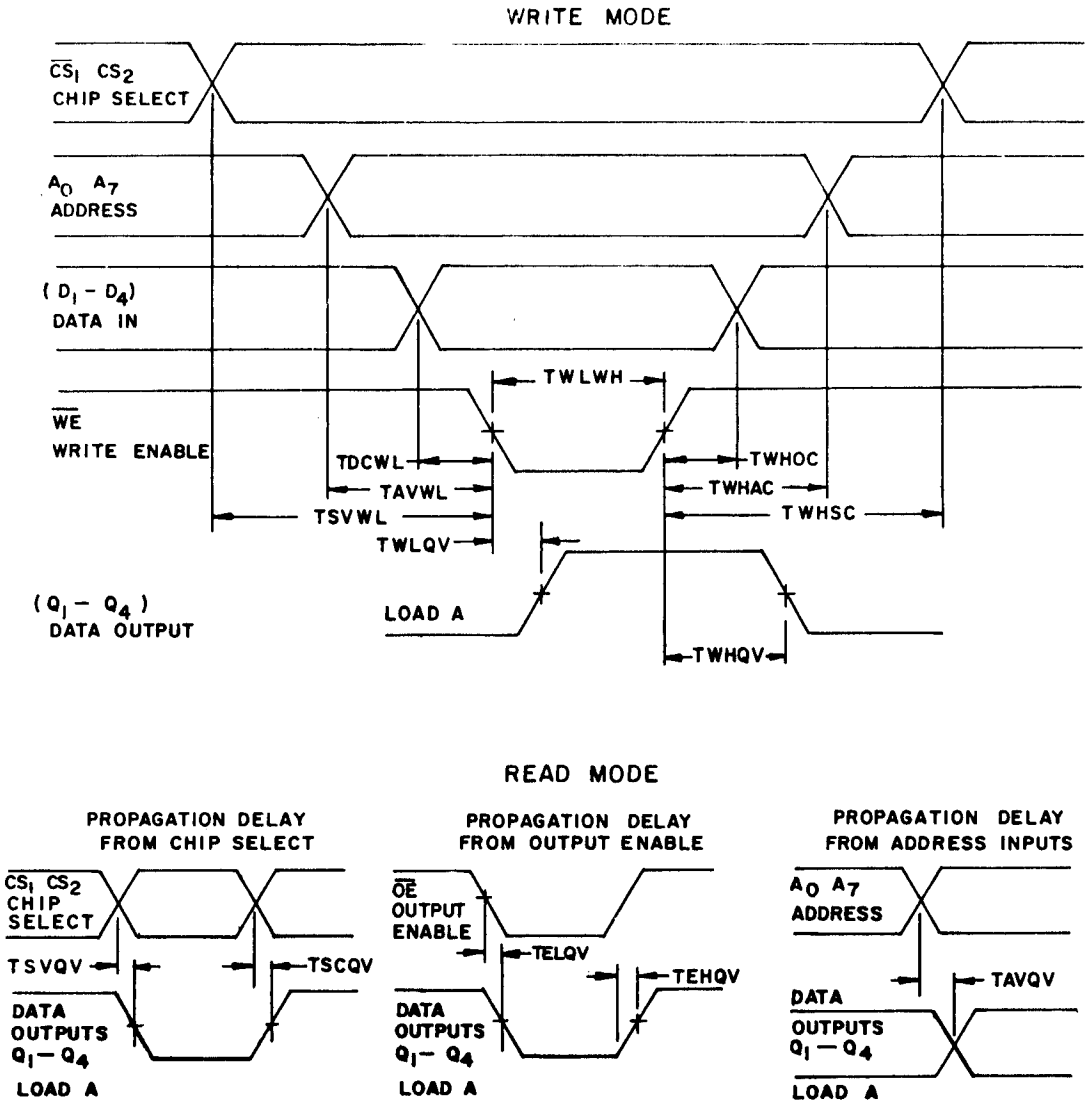

(All above measurements referenced to 1.5 V unless otherwise indicated)

NOTE: Timing Diagram represents one solution which results in an optimum cycle time. Timing may be changed to fit various applications as long as the worst case limits are not violated.

FIGURE 6. Switching time load circuits, test conditions and waveforms - Continued.

Device types 10, 12, 14 and 15.

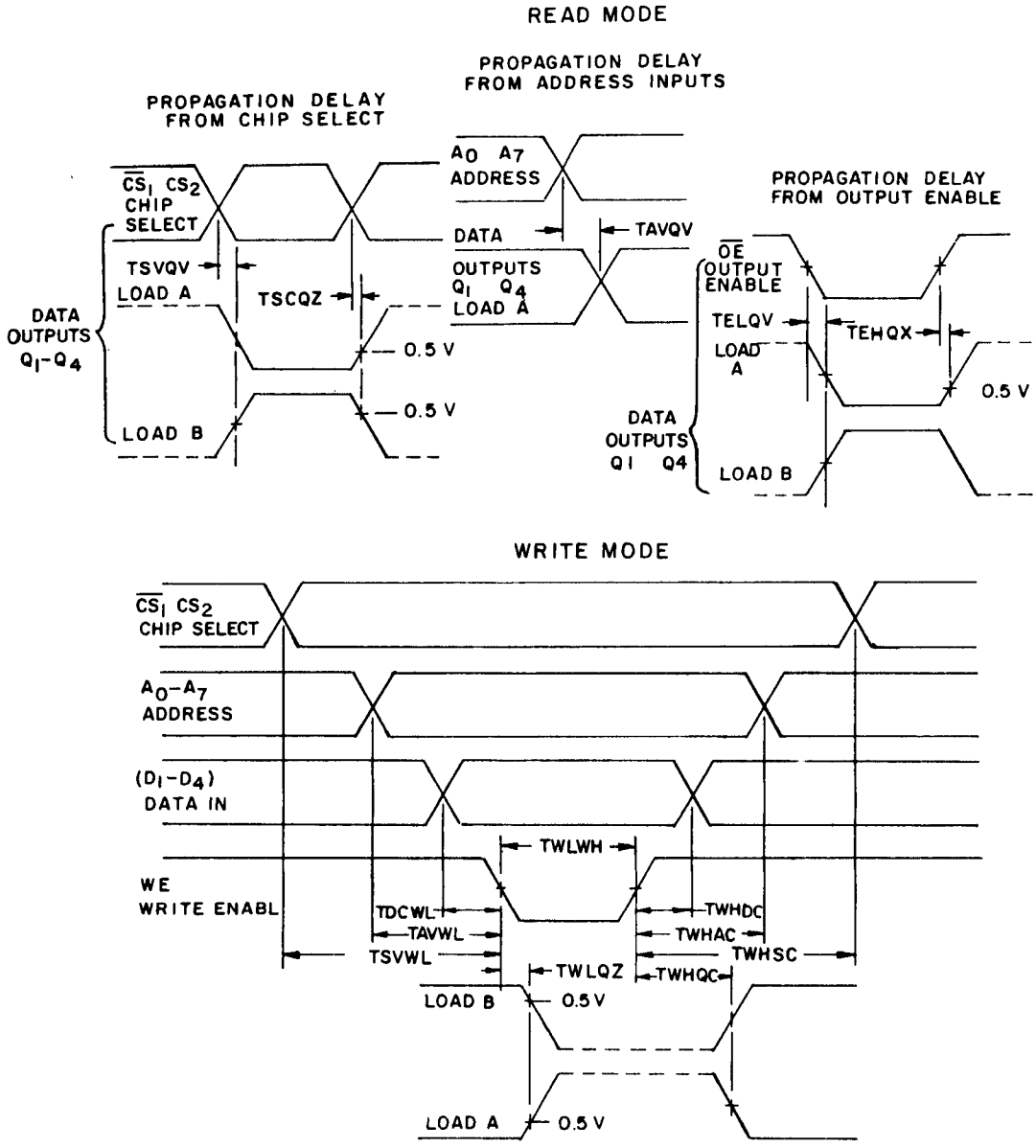

(All above measurements referenced to 1.5 V unless otherwise indicated)

NOTE: Timing Diagram represents one solution which results in an optimum cycle time. Timing may be changed to fit various applications as long as the worst case limits are not violated.

FIGURE 6. Switching time load circuits, test conditions and waveforms - Continued.

TABLE III. Group A inspection for device types 01 and 05.
Terminal conditions (pins not designated may be high ≥2.1 V or low ≤0.8 V, or open or GND)

Subgroup	Symbol	MIL-STD-883-method	Cases E,F Test no.	1 $\overline{CS}$	2 A_0	3 A_1	4 A_2	5 A_3	6 A_4	7 Q	8 GND	9 A_5	10 A_6	11 A_7	12 A_8	13 A_9	14 $\overline{WE}$	15 D_{IN}	16 V_{CC}	Measured terminal	Test limits Min	Test limits Max	Unit
1 T_C = 25°C	V_{IC}		1	-12 mA							GND								5.5 V	$\overline{CS}$		-1.5	V
			2		-12 mA															A_0			
			3			-12 mA														A_1			
			4				-12 mA													A_2			
			5					-12 mA												A_3			
			6						-12 mA											A_4			
			7									-12 mA								A_5			
			8										-12 mA							A_6			
			9											-12 mA						A_7			
			10												-12 mA					A_8			
			11													-12 mA				A_9			
			12														-12 mA			$\overline{WE}$			
			13															-12 mA		D_{IN}			
	I_{IL}	3009	14	0.45 V																$\overline{CS}$	-1.0	-400	μA
			15		0.45 V															A_0			
			16			0.45 V														A_1			
			17				0.45 V													A_2			
			18					0.45 V												A_3			
			19						0.45 V											A_4			
			20									0.45 V								A_5			
			21										0.45 V							A_6			
			22											0.45 V						A_7			
			23												0.45 V					A_8			
			24													0.45 V				A_9			
			25														0.45 V			$\overline{WE}$			
			26															0.45 V		D_{IN}			
	I_{IH}	3010	27	5.5 V																$\overline{CS}$		40	
			28		5.5 V															A_0			
			29			5.5 V														A_1			
			30				5.5 V													A_2			
			31					5.5 V												A_3			
			32						5.5 V											A_4			
			33									5.5 V								A_5			
			34										5.5 V							A_6			
			35											5.5 V						A_7			
			36												5.5 V					A_8			
			37													5.5 V				A_9			
			38														5.5 V			$\overline{WE}$			
			39															5.5 V		D_{IN}			
	I_{CEX}		40	GND	GND	GND	GND	GND	GND	5.5 V		GND	GND	GND	GND	GND	2/	5.5 V		Q		100	
	I_{CC}	3005	41	GND	GND	GND	GND	GND	GND			GND	GND	GND	GND	GND	GND	GND		V_{CC}		1/	mA
	V_{OL}	3007	42	0.8 V	0.8 V	0.8 V	0.8 V	0.8 V	0.8 V	16 mA		0.8 V	0.8 V	0.8 V	0.8 V	0.8 V	2/	0.8 V	4.5 V	D_{OUT}		0.45	V
2	Same tests, terminal conditions, and limits as for subgroup 1, except T_C = 125°C and V_{IC} tests are omitted.																						
3	Same tests, terminal conditions, and limits as for subgroup 1, except T_C = -55°C and V_{IC} tests are omitted.																						

See footnotes at end of table.

TABLE III. Group A inspection for device types 01 and 05 - Continued.
Terminal conditions (pins not designated may be high ≥2.1 V or low ≤0.8 V, or open or GND)

Subgroup	Symbol	MIL-STD-883-method	Cases E,F Test no.	1 $\overline{CS}$	2 A_0	3 A_1	4 A_2	5 A_3	6 A_4	7 Q	8 GND	9 A_5	10 A_6	11 A_7	12 A_8	13 A_9	14 $\overline{WE}$	15 D_{IN}	16 V_{CC}	Measured terminal	Test limits Min	Test limits Max	Unit
7 T_C = 25°C	Functional tests	3014	43	3/	3/	3/	3/	3/	3/	3/	GND	3/	3/	3/	3/	3/	3/	3/	3/	Q		3/	
8	Same tests, terminal conditions, and limits as for subgroup 7, except T_C = 125°C and -55°C.																						
9 T_C = 25°C	TAVQV	GALPAT Fig. 6	44	4/	4/	4/	4/	4/	4/	5/	GND	4/	4/	4/	4/	4/	4/	4/	4/	Q		60	ns
	TSVQV		45																			45	
	TSCQZ		46																			50	
	TWLQV		47																			45	
	TWHQV		48																			50	
	TWLWH	GGII Fig. 6	49	6/	6/	6/	6/	6/	6/			6/	6/	6/	6/	6/	6/	6/	6/		40		
	TWHDC		50																		5		
	TDCWL		51																		5		
	TAVWL		52																		15,7/		
	TWHAC		53																		5, 7/		
	TSVWL		54																		5		
	TWHSC		55																		5		
10	Same tests, terminal conditions, and limits as for subgroup 9, except T_C = 125°C.																						
11	Same tests, terminal conditions, and limits as for subgroup 10, except T_C = -55°C.																						

See footnotes at end of table.

TABLE III. Group A inspection for device types 02 and 06.
Terminal conditions (pins not designated may be high ≥2.1 V or low ≤0.8 V, or open or GND)

Subgroup	Symbol	MIL-STD-883-method	Cases E,F Test no.	1 $\overline{CS}$	2 A_0	3 A_1	4 A_2	5 A_3	6 A_4	7 Q	8 GND	9 A_5	10 A_6	11 A_7	12 A_8	13 A_9	14 $\overline{WE}$	15 D_{IN}	16 V_{CC}	Measured terminal	Test limits Min	Test limits Max	Unit
1 T_C = 25°C	V_{IC}		1	-12 mA							GND								5.5 V	$\overline{CS}$		-1.5	V
			2		-12 mA															A_0			
			3			-12 mA														A_1			
			4				-12 mA													A_2			
			5					-12 mA												A_3			
			6						-12 mA											A_4			
			7									-12 mA								A_5			
			8										-12 mA							A_6			
			9											-12 mA						A_7			
			10												-12 mA					A_8			
			11													-12 mA				A_9			
			12														-12 mA			$\overline{WE}$			
			13															-12 mA		D_{IN}			
	I_{IL}	3009	14	0.45 V																$\overline{CS}$	-1.0	-400	μA
			15		0.45 V															A_0			
			16			0.45 V														A_1			
			17				0.45 V													A_2			
			18					0.45 V												A_3			
			19						0.45 V											A_4			
			20									0.45 V								A_5			
			21										0.45 V							A_6			
			22											0.45 V						A_7			
			23												0.45 V					A_8			
			24													0.45 V				A_9			
			25														0.45 V			$\overline{WE}$			
			26															0.45 V		D_{IN}			
	I_{IH}	3010	27	5.5 V																$\overline{CS}$		40	
			28		5.5 V															A_0			
			29			5.5 V														A_1			
			30				5.5 V													A_2			
			31					5.5 V												A_3			
			32						5.5 V											A_4			
			33									5.5 V								A_5			
			34										5.5 V							A_6			
			35											5.5 V						A_7			
			36												5.5 V					A_8			
			37													5.5 V				A_9			
			38														5.5 V			$\overline{WE}$			
			39															5.5 V		D_{IN}			
	I_{OS}	3011	40	GND	GND	GND	GND	GND	GND	GND		GND	GND	GND	GND	GND	2/	5.5 V		Q	-20	-100	mA
	I_{CC}	3005	41	GND	GND	GND	GND	GND	GND			GND	GND	GND	GND	GND	GND	GND		V_{CC}		1/	mA
	I_{OHZ}		42	0.4 V	0.4 V	0.4 V	0.4 V	0.4 V	0.4 V	4.5 V		0.4 V	0.4 V	0.4 V	0.4 V	0.4 V	0.4 V	0.4 V		Q		50	μA
	I_{OLZ}		43	0.4 V	0.4 V	0.4 V	0.4 V	0.4 V	0.4 V	0.45 V		0.4 V	0.4 V	0.4 V	0.4 V	0.4 V	0.4 V	0.4 V		Q		-50	μA
	V_{OL}	3007	44	0.8 V	0.8 V	0.8 V	0.8 V	0.8 V	0.8 V	16 mA		0.8 V	0.8 V	0.8 V	0.8 V	0.8 V	2/	0.4 V	4.5 V	Q		0.45	V
	V_{OH}	3006	45	0.8 V	0.8 V	0.8 V	0.8 V	0.8 V	0.8 V	-5.2 mA		0.8 V	0.8 V	0.8 V	0.8 V	0.8 V	2/	2.1 V	4.5 V	Q	2.4		V
2	Same tests, terminal conditions, and limits as for subgroup 1, except T_C = 125°C and V_{IC} tests are omitted.																						
3	Same tests, terminal conditions, and limits as for subgroup 1, except T_C = -55°C and V_{IC} tests are omitted.																						

See footnotes at end of table.

TABLE III. Group A inspection for device types 02 and 06 - Continued.
Terminal conditions (pins not designated may be high ≥2.1 V or low ≤0.8 V, or open or GND)

Subgroup	Symbol	MIL-STD-883-method	Cases E,F Test no.	1 $\overline{CS}$	2 A_0	3 A_1	4 A_2	5 A_3	6 A_4	7 Q	8 GND	9 A_5	10 A_6	11 A_7	12 A_8	13 A_9	14 $\overline{WE}$	15 D_{IN}	16 V_{CC}	Measured terminal	Test limits Min	Test limits Max	Unit
7 T_C = 25°C	Functional tests	3014	46	3/	3/	3/	3/	3/	3/	3/	GND	3/	3/	3/	3/	3/	3/	3/	3/	Q		3/	
8	Same tests, terminal conditions, and limits as for subgroup 7, except T_C = 125°C and -55°C.																						
9 T_C = 25°C	TAVQV	GALPAT Fig. 6	47	4/	4/	4/	4/	4/	4/	5/	GND	4/	4/	4/	4/	4/	4/	4/	4/	Q		60	ns
	TSVQV		48																			45	
	TSCQZ		49																			50	
	TWLQZ		50																			45	
	TWHQV		51																			50	
	TWLWH	GGII Fig. 6	52	6/	6/	6/	6/	6/	6/			6/	6/	6/	6/	6/	6/	6/	6/		40		
	TWHDC		53																		5		
	TDCWL		54																		5		
	TAVWL		55																		15,7/		
	TWHAC		56																		5, 7/		
	TSVWL		57																		5		
	TWHSC		58																		5		
10	Same tests, terminal conditions, and limits as for subgroup 9, except T_C = 125°C.																						
11	Same tests, terminal conditions, and limits as for subgroup 9, except T_C = -55°C.																						

See footnotes at end of table.

TABLE III. Group A inspection for device type 03.
Terminal conditions (pins not designated may be high ≥2.1 V or low ≤0.8 V, or open or GND)

Subgroup	Symbol	MIL-STD-883-method	Cases E,F Test no.	1 $\overline{CS}$	2 A_0	3 A_1	4 A_2	5 A_3	6 A_4	7 Q	8 GND	9 A_5	10 A_6	11 A_7	12 A_8	13 A_9	14 $\overline{WE}$	15 D_{IN}	16 V_{CC}	Measured terminal	Test limits Min	Max	Unit
1 T_C = 25°C	V_{IC}		1	-10 mA							GND								5.5 V	$\overline{CS}$		-1.5	V
			2		-10 mA															A_0			
			3			-10 mA														A_1			
			4				-10 mA													A_2			
			5					-10 mA												A_3			
			6						-10 mA											A_4			
			7									-10 mA								A_5			
			8										-10 mA							A_6			
			9											-10 mA						A_7			
			10												-10 mA					A_8			
			11													-10 mA				A_9			
			12														-10 mA			$\overline{WE}$			
			13															-10 mA		D_{IN}			
	I_{IL}	3009	14	0.45 V																$\overline{CS}$	-1.0	-400	μA
			15		0.45 V															A_0			
			16			0.45 V														A_1			
			17				0.45 V													A_2			
			18					0.45 V												A_3			
			19						0.45 V											A_4			
			20									0.45 V								A_5			
			21										0.45 V							A_6			
			22											0.45 V						A_7			
			23												0.45 V					A_8			
			24													0.45 V				A_9			
			25														0.45 V			$\overline{WE}$			
			26															0.45 V		D_{IN}			
	I_{IH1}	3010	27	5.5 V																$\overline{CS}$		40	
			28		5.5 V															A_0			
			29			5.5 V														A_1			
			30				5.5 V													A_2			
			31					5.5 V												A_3			
			32						5.5 V											A_4			
			33									5.5 V								A_5			
			34										5.5 V							A_6			
			35											5.5 V						A_7			
			36												5.5 V					A_8			
			37													5.5 V				A_9			
			38														5.5 V			$\overline{WE}$			
			39															5.5 V		D_{IN}			
	I_{CEX}		40	GND	GND	GND	GND	GND	GND	4.5 V		GND	GND	GND	GND	GND	2/	5.5 V		Q		100	
	I_{CC}	3005	41	GND	GND	GND	GND	GND	GND			GND	GND	GND	GND	GND	GND	GND		V_{CC}		1/	mA
	V_{OL}	3007	42	0.8 V	0.8 V	0.8 V	0.8 V	0.8 V	0.8 V	16 mA		0.8 V	0.8 V	0.8 V	0.8 V	0.8 V	2/	0.8 V	4.5 V	Q		0.45	V
2	Same tests, terminal conditions, and limits as for subgroup 1, except T_C = 125°C and V_{IC} tests are omitted.																						
3	Same tests, terminal conditions, and limits as for subgroup 1, except T_C = -55°C and V_{IC} tests are omitted.																						

See footnotes at end of table.

TABLE III. Group A inspection for device type 03. - Continued.
Terminal conditions (pins not designated may be high ≥2.1 V or low ≤0.8 V, or open or GND)

Subgroup	Symbol	MIL-STD-883-method	Cases E,F Test no.	1 $\overline{CS}$	2 A_0	3 A_1	4 A_2	5 A_3	6 A_4	7 Q	8 GND	9 A_5	10 A_6	11 A_7	12 A_8	13 A_9	14 $\overline{WE}$	15 D_{IN}	16 V_{CC}	Measured terminal	Test limits Min	Test limits Max	Unit
7 T_C = 25°C	Functional tests	3014	43	3/	3/	3/	3/	3/	3/	3/	GND	3/	3/	3/	3/	3/	3/	3/	3/	Q		3/	
8	Same tests, terminal conditions, and limits as for subgroup 7, except T_C = 125°C and -55°C.																						
9 T_C = 25°C	TAVQV	GALPAT Fig. 6	44	4/	4/	4/	4/	4/	4/	5/	GND	4/	4/	4/	4/	4/	4/	4/	4/	Q		70	ns
	TSVQV		45																			45	
	TSCQZ		46																			50	
	TWLQZ		47																			45	
	TWHQV		48																			55	
	TWLWH	GGII Fig. 6	49	6/	6/	6/	6/	6/	6/			6/	6/	6/	6/	6/	6/	6/	6/		50		
	TWHDC		50																		10		
	TDCWL		51																		10		
	TAVWL		52																		10		
	TWHAC		53																		10		
	TSVWL		54																		10		
	TWHSC		55																		10		
10	Same tests, terminal conditions, and limits as for subgroup 9, except T_C = 125°C.																						
11	Same tests, terminal conditions, and limits as for subgroup 9, except T_C = -55°C.																						

See footnotes at end of table.

TABLE III. Group A inspection for device type 04.
Terminal conditions (pins not designated may be high ≥2.1 V or low ≤0.8 V, or open or GND)

Subgroup	Symbol	MIL-STD-883-method	Cases E,F Test no.	1 $\overline{CS}$	2 A_0	3 A_1	4 A_2	5 A_3	6 A_4	7 Q	8 GND	9 A_5	10 A_6	11 A_7	12 A_8	13 A_9	14 $\overline{WE}$	15 D_{IN}	16 V_{CC}	Measured terminal	Test limits Min	Test limits Max	Unit
1 T_C = 25°C	V_{IC}		1	-10 mA							GND								5.5 V	$\overline{CS}$		-1.5	V
			2		-10 mA															A_0			
			3			-10 mA														A_1			
			4				-10 mA													A_2			
			5					-10 mA												A_3			
			6						-10 mA											A_4			
			7									-10 mA								A_5			
			8										-10 mA							A_6			
			9											-10 mA						A_7			
			10												-10 mA					A_8			
			11													-10 mA				A_9			
			12														-10 mA			$\overline{WE}$			
			13															-10 mA		D_{IN}			
	I_{IL}	3009	14	0.45 V																$\overline{CS}$	-1.0	-400	μA
			15		0.45 V															A_0			
			16			0.45 V														A_1			
			17				0.45 V													A_2			
			18					0.45 V												A_3			
			19						0.45 V											A_4			
			20									0.45 V								A_5			
			21										0.45 V							A_6			
			22											0.45 V						A_7			
			23												0.45 V					A_8			
			24													0.45 V				A_9			
			25														0.45 V			$\overline{WE}$			
			26															0.45 V		D_{IN}			
	I_{IH1}	3010	27	5.5 V																$\overline{CS}$		40	
			28		5.5 V															A_0			
			29			5.5 V														A_1			
			30				5.5 V													A_2			
			31					5.5 V												A_3			
			32						5.5 V											A_4			
			33									5.5 V								A_5			
			34										5.5 V							A_6			
			35											5.5 V						A_7			
			36												5.5 V					A_8			
			37													5.5 V				A_9			
			38														5.5 V			$\overline{WE}$			
			39															5.5 V		D_{IN}			
	I_{OS}	3011	40	GND	GND	GND	GND	GND	GND	GND		GND	GND	GND	GND	GND	2/	5.5 V		Q	-20	-100	mA
	I_{CC}	3005	41	GND	GND	GND	GND	GND	GND			GND	GND	GND	GND	GND	GND	GND		V_{CC}		1/	mA
	I_{OHZ}		42	0.4 V	0.4 V	0.4 V	0.4 V	0.4 V	0.4 V	2.4 V		0.4 V	0.4 V	0.4 V	0.4 V	0.4 V	0.4 V	0.4 V		Q		50	μA
	I_{OLZ}		43	0.4 V	0.4 V	0.4 V	0.4 V	0.4 V	0.4 V	0.45 V		0.4 V	0.4 V	0.4 V	0.4 V	0.4 V	0.4 V	0.4 V		Q		-50	μA
	V_{OL}	3007	44	0.8 V	0.8 V	0.8 V	0.8 V	0.8 V	0.8 V	16 mA		0.8 V	0.8 V	0.8 V	0.8 V	0.8 V	2/	0.4 V	4.5 V	Q		0.45	V
	V_{OH}	3006	45	0.8 V	0.8 V	0.8 V	0.8 V	0.8 V	0.8 V	-5.2 mA		0.8 V	0.8 V	0.8 V	0.8 V	0.8 V	2/	2.1 V	4.5 V	Q	2.4		V
2	Same tests, terminal conditions, and limits as for subgroup 1, except T_C = 125°C and V_{IC} tests are omitted.																						
3	Same tests, terminal conditions, and limits as for subgroup 1, except T_C = -55°C and V_{IC} tests are omitted.																						

See footnotes at end of table.

TABLE III. Group A inspection for device type 04 - Continued.
Terminal conditions (pins not designated may be high ≥2.1 V or low ≤0.8 V, or open or GND)

Subgroup	Symbol	MIL-STD-883-method	Cases E,F Test no.	1 $\overline{CS}$	2 A_0	3 A_1	4 A_2	5 A_3	6 A_4	7 Q	8 GND	9 A_5	10 A_6	11 A_7	12 A_8	13 A_9	14 $\overline{WE}$	15 D_{IN}	16 V_{CC}	Measured terminal	Test limits Min	Test limits Max	Unit
7 T_C = 25°C	Functional tests	3014	46	3/	3/	3/	3/	3/	3/	3/	GND	3/	3/	3/	3/	3/	3/	3/	3/	Q		3/	
8	Same tests, terminal conditions, and limits as for subgroup 7, except T_C = 125°C and -55°C.																						
9 T_C = 25°C	TAVQV	GALPAT Fig. 6	47	4/	4/	4/	4/	4/	4/	5/	GND	4/	4/	4/	4/	4/	4/	4/	4/	Q		70	ns
	TSVQV		48																			45	
	TSCQZ		49																			50	
	TWLQZ		50																			45	
	TWHQV		51																			55	
	TWLWH	GGII Fig. 6	52	6/	6/	6/	6/	6/	6/			6/	6/	6/	6/	6/	6/	6/	6/		50		
	TWHDC		53																		10		
	TDCWL		54																		10		
	TAVWL		55																		10		
	TWHAC		56																		10		
	TSVWL		57																		10		
	TWHSC		58																		10		
10	Same tests, terminal conditions, and limits as for subgroup 9, except T_C = 125°C.																						
11	Same tests, terminal conditions, and limits as for subgroup 9, except T_C = -55°C.																						

See footnotes at end of table.

TABLE III. Group A inspection for device type 07.
Terminal conditions (pins not designated may be high ≥2.1 V or low ≤0.8 V, or open or GND)

Subgroup	Symbol	MIL-STD-883-method	Cases E,F Test no.	1 $\overline{CS}$	2 A_0	3 A_1	4 A_2	5 A_3	6 A_4	7 Q	8 GND	9 A_5	10 A_6	11 A_7	12 A_8	13 A_9	14 $\overline{WE}$	15 D_{IN}	16 V_{CC}	Measured terminal	Test Limits Min	Test Limits Max	Unit
1 T_C = 25°C	V_{IC}		1	-10 mA							GND								5.5 V	$\overline{CS}$		-1.5	V
			2		-10 mA															A_0			
			3			-10 mA														A_1			
			4				-10 mA													A_2			
			5					-10 mA												A_3			
			6						-10 mA											A_4			
			7									-10 mA								A_5			
			8										-10 mA							A_6			
			9											-10 mA						A_7			
			10												-10 mA					A_8			
			11													-10 mA				A_9			
			12														-10 mA			$\overline{WE}$			
			13															-10 mA		D_{IN}			
	I_{IL}	3009	14	0.45 V																$\overline{CS}$	-1.0	-400	μA
			15		0.45 V															A_0			
			16			0.45 V														A_1			
			17				0.45 V													A_2			
			18					0.45 V												A_3			
			19						0.45 V											A_4			
			20									0.45 V								A_5			
			21										0.45 V							A_6			
			22											0.45 V						A_7			
			23												0.45 V					A_8			
			24													0.45 V				A_9			
			25														0.45 V			$\overline{WE}$			
			26															0.45 V		D_{IN}			
	I_{IH1}	3010	27	5.5 V																$\overline{CS}$		40	
			28		5.5 V															A_0			
			29			5.5 V														A_1			
			30				5.5 V													A_2			
			31					5.5 V												A_3			
			32						5.5 V											A_4			
			33									5.5 V								A_5			
			34										5.5 V							A_6			
			35											5.5 V						A_7			
			36												5.5 V					A_8			
			37													5.5 V				A_9			
			38														5.5 V			$\overline{WE}$			
			39															5.5 V		D_{IN}			
	I_{CEX}		40							4.5 V										Q		100	
	I_{CC}	3005	41	GND	GND	GND	GND	GND	GND			GND	GND	GND	GND	GND	GND	GND		V_{CC}		1/	mA
	V_{OL}	3007	42	0.8 V	0.8 V	0.8 V	0.8 V	0.8 V	0.8 V	16 mA		0.8 V	0.8 V	0.8 V	0.8 V	0.8 V	2/	0.8 V	4.5 V	Q		0.45	V
2	Same tests, terminal conditions, and limits as for subgroup 1, except T_C = 125°C and V_{IC} tests are omitted.																						
3	Same tests, terminal conditions, and limits as for subgroup 1, except T_C = -55°C and V_{IC} tests are omitted.																						

See footnotes at end of table.

TABLE III. Group A inspection for device type 07 - Continued.
Terminal conditions (pins not designated may be high ≥2.1 V or low ≤0.8 V, or open or GND)

Subgroup	Symbol	MIL-STD-883-method	Cases E,F Test no.	1 $\overline{CS}$	2 A_0	3 A_1	4 A_2	5 A_3	6 A_4	7 Q	8 GND	9 A_5	10 A_6	11 A_7	12 A_8	13 A_9	14 $\overline{WE}$	15 D_{IN}	16 V_{CC}	Measured terminal	Test limits Min	Test limits Max	Unit
7 T_C = 25°C	Functional tests	3014	43	3/	3/	3/	3/	3/	3/	3/	GND	3/	3/	3/	3/	3/	3/	3/	3/	Q		3/	
8	Same tests, terminal conditions, and limits as for subgroup 7, except T_C = 125°C and -55°C.																						
9 T_C = 25°C	TAVQV	GALPAT Fig. 6	44	4/	4/	4/	4/	4/	4/	5/	GND	4/	4/	4/	4/	4/	4/	4/	4/	Q		45	ns
	TSVQV		45																			35	
	TSCQZ		46																			35	
	TWLQV		47																			35	
	TWHQV		48																			40	
	TWLWH	GGII Fig. 6	49	6/	6/	6/	6/	6/	6/			6/	6/	6/	6/	6/	6/	6/	6/		35		
	TWHDC		50																		5		
	TDCWL		51																		5		
	TACWL		52																		5		
	TAVWL		53																		5		
	TWHAC		54																		5		
	TSVWL		55																		5		
	TWHSC		56																		5		
10	Same tests, terminal conditions, and limits as for subgroup 9, except T_C = 125°C.																						
11	Same tests, terminal conditions, and limits as for subgroup 9, except T_C = -55°C.																						

See footnotes at end of table.

TABLE III. Group A inspection for device type 08.
Terminal conditions (pins not designated may be high ≥2.1 V or low ≤0.8 V, or open or GND)

Subgroup	Symbol	MIL-STD-883-method	Cases E,F Test no.	1 $\overline{CS}$	2 A_0	3 A_1	4 A_2	5 A_3	6 A_4	7 Q	8 GND	9 A_5	10 A_6	11 A_7	12 A_8	13 A_9	14 $\overline{WE}$	15 D_{IN}	16 V_{CC}	Measured terminal	Test limits Min	Test limits Max	Unit
1 T_C = 25°C	V_{IC}		1	-10 mA							GND								5.5 V	$\overline{CS}$		-1.5	V
			2		-10 mA															A_0			
			3			-10 mA														A_1			
			4				-10 mA													A_2			
			5					-10 mA												A_3			
			6						-10 mA											A_4			
			7									-10 mA								A_5			
			8										-10 mA							A_6			
			9											-10 mA						A_7			
			10												-10 mA					A_8			
			11													-10 mA				A_9			
			12														-10 mA			$\overline{WE}$			
			13															-10 mA		D_{IN}			
	I_{IL}	3009	14	0.45 V																$\overline{CS}$	-1.0	-400	μA
			15		0.45 V															A_0			
			16			0.45 V														A_1			
			17				0.45 V													A_2			
			18					0.45 V												A_3			
			19						0.45 V											A_4			
			20									0.45 V								A_5			
			21										0.45 V							A_6			
			22											0.45 V						A_7			
			23												0.45 V					A_8			
			24													0.45 V				A_9			
			25														0.45 V			$\overline{WE}$			
			26															0.45 V		D_{IN}			
	I_{IH1}	3010	27	5.5 V																$\overline{CS}$		40	
			28		5.5 V															A_0			
			29			5.5 V														A_1			
			30				5.5 V													A_2			
			31					5.5 V												A_3			
			32						5.5 V											A_4			
			33									5.5 V								A_5			
			34										5.5 V							A_6			
			35											5.5 V						A_7			
			36												5.5 V					A_8			
			37													5.5 V				A_9			
			38														5.5 V			$\overline{WE}$			
			39															5.5 V		D_{IN}			
	I_{OS}	3011	40	GND	GND	GND	GND	GND	GND	GND		GND	GND	GND	GND	GND	2/	5.5 V		Q	-20	-100	mA
	I_{CC}	3005	41	GND	GND	GND	GND	GND	GND			GND	GND	GND	GND	GND	GND	GND		V_{CC}		1/	mA
	I_{OHZ}		42	0.4 V	0.4 V	0.4 V	0.4 V	0.4 V	0.4 V	2.4 V		0.4 V	0.4 V	0.4 V	0.4 V	0.4 V	0.4 V	0.4 V		Q		50	μA
	I_{OLZ}		43	0.4 V	0.4 V	0.4 V	0.4 V	0.4 V	0.4 V	0.45 V		0.4 V	0.4 V	0.4 V	0.4 V	0.4 V	0.4 V	0.4 V		Q		-50	μA
	V_{OL}	3007	44	0.8 V	0.8 V	0.8 V	0.8 V	0.8 V	0.8 V	16 mA		0.8 V	0.8 V	0.8 V	0.8 V	0.8 V	2/	0.4 V	4.5 V	Q		0.45	V
	V_{OH}	3006	45	0.8 V	0.8 V	0.8 V	0.8 V	0.8 V	0.8 V	-5.2 mA		0.8 V	0.8 V	0.8 V	0.8 V	0.8 V	2/	2.1 V	4.5 V	Q	2.4		V
2	Same tests, terminal conditions, and limits as for subgroup 1, except T_C = 125°C and V_{IC} tests are omitted.																						
3	Same tests, terminal conditions, and limits as for subgroup 1, except T_C = -55°C and V_{IC} tests are omitted.																						

See footnotes at end of table.

TABLE III. Group A inspection for device type 08 - Continued.
Terminal conditions (pins not designated may be high ≥2.1 V or low ≤0.8 V, or open or GND)

Subgroup	Symbol	MIL-STD-883-method	Cases E,F Test no.	1	2	3	4	5	6	7	8	9	10	11	12	13	14	15	16	Measured terminal	Test limits Min	Test limits Max	Unit
				$\overline{CS}$	A_0	A_1	A_2	A_3	A_4	Q	GND	A_5	A_6	A_7	A_8	A_9	$\overline{WE}$	D_{IN}	V_{CC}				
7 T_C = 25°C	Functional tests	3014	46	3/	3/	3/	3/	3/	3/	3/	GND	3/	3/	3/	3/	3/	3/	3/	3/	Q		3/	
8	Same tests, terminal conditions, and limits as for subgroup 7, except T_C = 125°C and -55°C.																						
9 T_C = 25°C	TAVQV	GALPAT Fig. 6	47	4/	4/	4/	4/	4/	4/	5/	GND	4/	4/	4/	4/	4/	4/	4/	4/	Q		45	ns
	TSVQV		48																			35	
	TSCQZ		49																			35	
	TWLQZ		50																			35	
	TWHQV		51																			40	
	TWLWH	GGII Fig. 6	52	6/	6/	6/	6/	6/	6/			6/	6/	6/	6/	6/	6/	6/	6/		35		
	TWHDC		53																		5		
	TDCWL		54																		5		
	TAVWL		55																		5		
	TWHAC		56																		5		
	TSVWL		57																		5		
	TWHSC		58																		5		
10	Same tests, terminal conditions, and limits as for subgroup 9, except T_C = 125°C.																						
11	Same tests, terminal conditions, and limits as for subgroup 9, except T_C = -55°C.																						

See footnotes at end of table.

TABLE III. Group A inspection for device type 09.
Terminal conditions (pins not designated may be high ≥2.1 V or low ≤0.8 V or open or GND)

Subgroup	Symbol	STD-883-method	Cases W,X / Case Y / Test no.	1 / 1 / A_3	2 / 2 / A_2	3 / 3 / A_1	4 / 4 / A_0	5 / 5 / A_5	6 / 7 / A_6	7 / 8 / A_7	8 / 9 / GND	9 / 10 / D_1	10 / 11 / Q_1	11 / 12 / D_2	12 / 13 / Q_2	13 / 14 / D_3	14 / 15 / Q_3	15 / 16 / D_4	16 / 17 / Q_4	17 / 19 / CS_2	18 / 20 / $\overline{OE}$	19 / 21 / $\overline{CS}_1$	20 / 22 / $\overline{WE}$	21 / 23 / A_4	22 / 24 / V_{CC}	Measured terminal	Test Limits Min	Test Limits Max	Unit
1 T_C = 25°C	V_{IC}		1	-10 mA							GND														5.5 V	A_3		-1.5	V
			2		-10 mA																					A_2			
			3			-10 mA																				A_1			
			4				-10 mA																			A_0			
			5					-10 mA																		A_5			
			6						-10 mA																	A_6			
			7							-10 mA																A_7			
			8									-10 mA														D_1			
			9											-10 mA												D_2			
			10													-10 mA										D_3			
			11															-10 mA								D_4			
			12																	-10 mA						$\overline{CS}_2$			
			13																		-10 mA					$\overline{OE}$			
			14																			-10 mA				$\overline{CS}_1$			
			15																				-10 mA			$\overline{WE}$			
			16																					-10 mA		A_4			
	I_{IL}	3009	17	0.45 V																						A_3	-10	-300	μA
			18		0.45 V																					A_2			
			19			0.45 V																				A_1			
			20				0.45 V																			A_0			
			21					0.45 V																		A_5			
			22						0.45 V																	A_6			
			23							0.45 V																A_7			
			24									0.45 V														D_1			
			25											0.45 V												D_2			
			26													0.45 V										D_3			
			27															0.45 V								D_4			
			28																	0.45 V						$\overline{CS}_2$			
			29																		0.45 V					$\overline{OE}$			
			30																			0.45 V				$\overline{CS}_1$			
			31																				0.45 V			$\overline{WE}$			
			32																					0.45 V		A_4			
	I_{IH1}	3010	33	5.5 V																						A_3		40	
			34		5.5 V																					A_2			
			35			5.5 V																				A_1			
			36				5.5 V																			A_0			
			37					5.5 V																		A_5			
			38						5.5 V																	A_6			
			39							5.5 V																A_7			
			40									5.5 V														D_1			
			41											5.5 V												D_2			
			42													5.5 V										D_3			
			43															5.5 V								D_4			
			44																	5.5 V						$\overline{CS}_2$			
			45																		5.5 V					$\overline{OE}$			
			46																			5.5 V				$\overline{CS}_1$			
			47																				5.5 V			$\overline{WE}$			
			48																					5.5 V		A_4			
	I_{CEX}		49									5.5 V	4.5 V													Q_1		100	
			50											5.5 V	4.5 V											Q_2			
			51													5.5 V	4.5 V									Q_3			
			52															5.5 V	4.5 V							Q_4			
	V_{OL}	3007	53									GND	8 mA	GND	GND	GND	GND	GND	GND	4.5 V	GND	GND	2/		4.5 V	Q_1		.45	V
			54										GND		8 mA		GND		GND							Q_2			
			55										GND		GND		8 mA		GND							Q_3			
			56										GND		GND		GND		8 mA							Q_4			
	I_{CC}	3005	57																						5.5 V	V_{CC}		1/	mA

See footnotes at end of table.

TABLE III. Group A inspection for device type 09 - Continued.
Terminal conditions (pins not designated may be high >2.1 V or low ≤0.8 V or open or GND)

Subgroup	Symbol	STD-883-method	Cases W,X	1	2	3	4	5	6	7	8	9	10	11	12	13	14	15	16	17	18	19	20	21	22	Measured terminal	Test limits		Unit
			Case Y Test no.	1 A_3	2 A_2	3 A_1	4 A_0	5 A_5	7 A_6	8 A_7	9 GND	10 D_1	11 Q_1	12 D_2	13 Q_2	14 D_3	15 Q_3	16 D_4	17 Q_4	19 CS_2	20 $\overline{OE}$	21 $\overline{CS}_1$	22 $\overline{WE}$	23 A_4	24 V_{CC}		Min	Max	
2	Same tests, terminal conditions, and limits as subgroup 1, except T_C = 125°C.																												
3	Same tests, terminal conditions, and limits as subgroup 1, except T_C = -55°C.																												
7 T_C = 25°C	Functional tests	3014	58		3/	3/	3/	3/	3/	3/	GND	3/	3/	3/	3/	3/	3/	3/	3/	3/	3/	3/	3/	3/	3/	Q			
8	Same tests, terminal conditions, and limits as subgroup 7, except T_C = -55°C.																												
9 T_C = 25°C	TAVQV	Fig. 6	59	4/	4/	4/	4/	4/	4/	4/	GND	4/	5/	4/	5/	4/	5/	4/	5/	4/	4/	4/	4/	4/	4/	Q		60	ns
	TSVQV		60																									45	
	TSCQZ		61																									45	
	TWLQV		62																									45	
	TWHQV		63																									50	
	TWLWH		64	6/	6/	6/	6/	6/	6/	6/		6/		6/		6/		6/		6/	6/	6/	6/	6/	6/		40		
	TWHDC		65																								5		
	TDCWL		66																								5		
	TAVWL		67																								10		
	TWHAC		68																								10		
	TSVWL		69																								5		
	TWHSC		70																								5		
10	Same tests, terminal conditions, and limits as subgroup 9, except T_C = -55°C.																												
11	Same tests, terminal conditions, and limits as subgroup 9, except T_C = 125°C.																												

See footnotes at end of table.

TABLE III. Group A inspection for device type 10.
Terminal conditions (pins not designated may be high ≥2.1 V or low ≤0.8 V or open or GND)

Subgroup	Symbol	STD-883-method	Cases W,X / Case Y / Test no.	1 / 1 / A_3	2 / 2 / A_2	3 / 3 / A_1	4 / 4 / A_0	5 / 5 / A_5	6 / 7 / A_6	7 / 8 / A_7	8 / 9 / GND	9 / 10 / D_1	10 / 11 / Q_1	11 / 12 / D_2	12 / 13 / Q_2	13 / 14 / D_3	14 / 15 / Q_3	15 / 16 / D_4	16 / 17 / Q_4	17 / 19 / CS_2	18 / 20 / $\overline{OE}$	19 / 21 / $\overline{CS}_1$	20 / 22 / $\overline{WE}$	21 / 23 / A_4	22 / 24 / V_{CC}	Measured terminal	Test limits Min	Test limits Max	Unit
1 T_C = 25°C	V_{IC}		1	-10 mA							GND														5.5 V	A_3		-1.5	V
			2		-10 mA																					A_2			
			3			-10 mA																				A_1			
			4				-10 mA																			A_0			
			5					-10 mA																		A_5			
			6						-10 mA																	A_6			
			7							-10 mA																A_7			
			8									-10 mA														D_1			
			9											-10 mA												D_2			
			10													-10 mA										D_3			
			11															-10 mA								D_4			
			12																	-10 mA						$\overline{CS}_2$			
			13																		-10 mA					$\overline{OE}$			
			14																			-10 mA				$\overline{CS}_1$			
			15																				-10 mA			$\overline{WE}$			
			16																					-10 mA		A_4			
	I_{IL}	3009	17	0.45 V																						A_3	-10	-300	μA
			18		0.45 V																					A_2			
			19			0.45 V																				A_1			
			20				0.45 V																			A_0			
			21					0.45 V																		A_5			
			22						0.45 V																	A_6			
			23							0.45 V																A_7			
			24									0.45 V														D_1			
			25											0.45 V												D_2			
			26													0.45 V										D_3			
			27															0.45 V								D_4			
			28																	0.45 V						$\overline{CS}_2$			
			29																		0.45 V					$\overline{OE}$			
			30																			0.45 V				$\overline{CS}_1$			
			31																				0.45 V			$\overline{WE}$			
			32																					0.45 V		A_4			
	I_{IH1}	3010	33	5.5 V																						A_3		40	
			34		5.5 V																					A_2			
			35			5.5 V																				A_1			
			36				5.5 V																			A_0			
			37					5.5 V																		A_5			
			38						5.5 V																	A_6			
			39							5.5 V																A_7			
			40									5.5 V														D_1			
			41											5.5 V												D_2			
			42													5.5 V										D_3			
			43															5.5 V								D_4			
			44																	5.5 V						$\overline{CS}_2$			
			45																		5.5 V					$\overline{OE}$			
			46																			5.5 V				$\overline{CS}_1$			
			47																				5.5 V			$\overline{WE}$			
			48																					5.5 V		A_4			
	I_{OHZ}		49									0.4 V	2.4 V							5.5 V	5.5 V	GND				Q_1	-50	50	
			50											0.4 V	2.4 V											Q_2			
			51													0.4 V	2.4 V									Q_3			
			52															0.4 V	2.4 V							Q_4			
	I_{OLZ}		53									0.4 V	.45													Q_1			
			54											0.4 V	.45 V											Q_2			
			55													0.4 V	.45 V									Q_3			
			56															0.4 V	.45 V							Q_4			
	V_{OL}	3007	57									0.8 V	8 mA								GND		2/		4.5 V	Q_1		.45	V
			58											0.8 V	8 mA											Q_2			
			59													0.8 V	8 mA									Q_3			
			60															0.8 V	8 mA							Q_4			

See footnotes at end of table.

TABLE III. Group A inspection for device type 10 - Continued.
Terminal conditions (pins not designated may be high ≥2.1 V or low ≤0.8 V or open or GND)

Subgroup	Symbol	STD-883-method	Cases W,X / Case Y / Test no.	1 / 1 / A_3	2 / 2 / A_2	3 / 3 / A_1	4 / 4 / A_0	5 / 5 / A_5	6 / 7 / A_6	7 / 8 / A_7	8 / 9 / GND	9 / 10 / D_1	10 / 11 / Q_1	11 / 12 / D_2	12 / 13 / Q_2	13 / 14 / D_3	14 / 15 / Q_3	15 / 16 / D_4	16 / 17 / Q_4	17 / 19 / CS_2	18 / 20 / $\overline{OE}$	19 / 21 / $\overline{CS_1}$	20 / 22 / $\overline{WE}$	21 / 23 / A_4	22 / 24 / V_{CC}	Measured terminal	Test limits Min	Test limits Max	Unit
1 T_C = 25°C	V_{OH}	3006	61 62 63 64								GND	2.1 V	-5.2 mA	2.1 V	-5.2 mA	2.1 V	-5.2 mA	2.1 V	-5.2 mA	5.5 V	GND	GND	2/		4.5 V	Q_1 Q_2 Q_3 Q_4	2.4		V
	I_{OS}		65 66 67 68	GND	GND	GND	GND	GND	GND	GND		5.5 V	GND	5.5 V	GND	5.5 V	GND	5.5 V	GND					GND	5.5 V	Q_1 Q_2 Q_3 Q_4	-10	-70	mA
	I_{CC}	3005	69																							V_{CC}		1/	
2	Same tests, terminal conditions, and limits as subgroup 1, except T_C = 125°C.																												
3	Same tests, terminal conditions, and limits as subgroup 1, except T_C = -55°C.																												
7 T_C = 25°C	Functional tests	3014	70	3/	3/	3/	3/	3/	3/	3/	GND	3/	3/	3/	3/	3/	3/	3/	3/	3/	3/	3/	3/	3/	3/	Q			
8	Same tests, terminal conditions, and limits as subgroup 7, except T_C = -55°C.																												
9 T_C = 25°C	TAVQV	Fig. 6	71	4/	4/	4/	4/	4/	4/	4/	GND	4/	5/	4/	5/	4/	5/	4/	5/	4/	4/	4/	4/	4/	4/	Q		60	ns
	TSVQV		72																									45	
	TSCQZ		73																									45	
	TWLQZ		74																									45	
	TWHQV		75																									50	
	TWLWH		76	6/	6/	6/	6/	6/	6/	6/		6/		6/		6/		6/		6/	6/	6/	6/	6/	6/		40		
	TWHDC		77																								5		
	TDCWL		78																								5		
	TAVWL		79																								10		
	TWHAC		80																								10		
	TSVWL		81																								5		
	TWHSC		82																								5		
10	Same tests, terminal conditions, and limits as subgroup 9, except T_C = 125°C.																												
11	Same tests, terminal conditions, and limits as subgroup 9, except T_C = -55°C.																												

See footnotes at end of table.

TABLE III. Group A inspection for device type 11.
Terminal conditions (pins not designated may be high ≥2.1 V or low ≤0.8 V or open or GND)

Subgroup	Symbol	STD-883-method	Cases W,X	1	2	3	4	5	6	7	8	9	10	11	12	13	14	15	16	17	18	19	20	21	22	Measured terminal	Test limits Min	Test limits Max	Unit
			Case Y	1	2	3	4	5	7	8	9	10	11	12	13	14	15	16	17	19	20	21	22	23	24				
			Test no.	A_3	A_2	A_1	A_0	A_5	A_6	A_7	GND	D_1	Q_1	D_2	Q_2	D_3	Q_3	D_4	Q_4	CS_2	$\overline{OE}$	$\overline{CS_1}$	$\overline{WE}$	A_4	V_{CC}				
1 T_C = 25°C	V_{IC}		1	-10 mA							GND														5.5 V	A_3		-1.5	V
			2		-10 mA																					A_2			
			3			-10 mA																				A_1			
			4				-10 mA																			A_0			
			5					-10 mA																		A_5			
			6						-10 mA																	A_6			
			7							-10 mA																A_7			
			8									-10 mA														D_1			
			9											-10 mA												D_2			
			10													-10 mA										D_3			
			11															-10 mA								D_4			
			12																	-10 mA						CS_2			
			13																		-10 mA					$\overline{OE}$			
			14																			-10 mA				$\overline{CS_1}$			
			15																				-10 mA			$\overline{WE}$			
			16																					-10 mA		A_4			
	I_{IL}	3009	17	0.45 V																						A_3	-10	-300	μA
			18		0.45 V																					A_2			
			19			0.45 V																				A_1			
			20				0.45 V																			A_0			
			21					0.45 V																		A_5			
			22						0.45 V																	A_6			
			23							0.45 V																A_7			
			24									0.45 V														D_1			
			25											0.45 V												D_2			
			26													0.45 V										D_3			
			27															0.45 V								D_4			
			28																	0.45 V						CS_2			
			29																		0.45 V					$\overline{OE}$			
			30																			0.45 V				$\overline{CS_1}$			
			31																				0.45 V			$\overline{WE}$			
			32																					0.45 V		A_4			
	I_{IH1}	3010	33	5.5 V																						A_3		40	
			34		5.5 V																					A_2			
			35			5.5 V																				A_1			
			36				5.5 V																			A_0			
			37					5.5 V																		A_5			
			38						5.5 V																	A_6			
			39							5.5 V																A_7			
			40									5.5 V														D_1			
			41											5.5 V												D_2			
			42													5.5 V										D_3			
			43															5.5 V								D_4			
			44																	5.5 V						CS_2			
			45																		5.5 V					$\overline{OE}$			
			46																			5.5 V				$\overline{CS_1}$			
			47																				5.5 V			$\overline{WE}$			
			48																					5.5 V		A_4			
	I_{CEX}		49									5.5 V	4.5 V													Q_1		100	
			50											5.5 V	4.5 V											Q_2			
			51													5.5 V	4.5 V									Q_3			
			52															5.5 V	4.5 V							Q_4			
	V_{OL}	3007	53									GND	8 mA	GND	GND	GND	GND	GND	GND						4.5 V	Q_1		.45	V
			54										GND		8 mA		GND		GND							Q_2			
			55										GND		GND		8 mA		GND							Q_3			
			56										GND		GND		GND		8 mA							Q_4			
	I_{CC}	3005	57																						5.5 V	V_{CC}		1/	mA

See footnotes at end of table.

TABLE III. Group A inspection for device type 11 - Continued.
Terminal conditions (pins not designated may be high ≥2.1 V or low ≤0.8 V or open or GND)

Subgroup	Symbol	STD-883-method	Cases W,X / Case Y / Test no.	1 / 1 / A_3	2 / 2 / A_2	3 / 3 / A_1	4 / 4 / A_0	5 / 5 / A_5	6 / 7 / A_6	7 / 8 / A_7	8 / 9 / GND	9 / 10 / D_1	10 / 11 / Q_1	11 / 12 / D_2	12 / 13 / Q_2	13 / 14 / D_3	14 / 15 / Q_3	15 / 16 / D_4	16 / 17 / Q_4	17 / 19 / CS_2	18 / 20 / $\overline{OE}$	19 / 21 / $\overline{CS_1}$	20 / 22 / $\overline{WE}$	21 / 23 / A_4	22 / 24 / V_{CC}	Measured terminal	Test limits Min	Test limits Max	Unit
2	Same tests, terminal conditions, and limits as subgroup 1, except T_C = 125°C.																													
3	Same tests, terminal conditions, and limits as subgroup 1, except T_C = -55°C, and I_{CC} (max) limit = 90 mA.																													
7 T_C = 25°C	Functional tests	3014	58		3/	3/	3/	3/	3/	3/	GND	3/	3/	3/	3/	3/	3/	3/	3/	3/	3/	3/	3/	3/	3/	Q			
8	Same tests, terminal conditions, and limits as subgroup 7, except T_C = 125°C and -55°C.																													
9 T_C = 25°C	TAVQV	Fig. 6	59	4/	4/	4/	4/	4/	4/	4/	GND	4/	5/	4/	5/	4/	5/	4/	5/	4/	4/	4/	4/	4/	4/	Q		75	ns
	TSVQV		60																									45	
	TSCQZ		61																									45	
	TWLQV		62																									45	
	TWHQV		63																									50	
	TWLWH		64	6/	6/	6/	6/	6/	6/	6/		6/		6/		6/		6/		6/	6/	6/	6/	6/	6/		55		
	TWHDC		65																								5		
	TDCWL		66																								5		
	TAVWL		67																								10		
	TWHAC		68																								10		
	TSVWL		69																								5		
	TWHSC		70																								5		
10	Same tests, terminal conditions, and limits as subgroup 9, except T_C = 125°C.																													
11	Same tests, terminal conditions, and limits as subgroup 9, except T_C = -55°C.																													

See footnotes at end of table.

TABLE III. Group A inspection for device type 12.
Terminal conditions (pins not designated may be high ≥2.1 V or low ≤0.8 V or open or GND)

Subgroup	Symbol	STD-883-method	Cases W,X	1	2	3	4	5	6	7	8	9	10	11	12	13	14	15	16	17	18	19	20	21	22	Measured terminal	Test limits Min	Test limits Max	Unit
			Case Y	1	2	3	4	5	7	8	9	10	11	12	13	14	15	16	17	19	20	21	22	23	24				
			Test no.	A_3	A_2	A_1	A_0	A_5	A_6	A_7	GND	D_1	Q_1	D_2	Q_2	D_3	Q_3	D_4	Q_4	CS_2	$\overline{OE}$	$\overline{CS}_1$	$\overline{WE}$	A_4	V_{CC}				
1 T_C = 25°C	V_{IC}		1	-10 mA							GND														5.5 V	A_3		-1.5	V
			2		-10 mA																					A_2			
			3			-10 mA																				A_1			
			4				-10 mA																			A_0			
			5					-10 mA																		A_5			
			6						-10 mA																	A_6			
			7							-10 mA																A_7			
			8									-10 mA														D_1			
			9											-10 mA												D_2			
			10													-10 mA										D_3			
			11															-10 mA								D_4			
			12																	-10 mA						CS_2			
			13																		-10 mA					$\overline{OE}$			
			14																			-10 mA				$\overline{CS}_1$			
			15																				-10 mA			$\overline{WE}$			
			16																					-10 mA		A_4			
	I_{IL}	3009	17	0.45 V																						A_3	-10	-300	μA
			18		0.45 V																					A_2			
			19			0.45 V																				A_1			
			20				0.45 V																			A_0			
			21					0.45 V																		A_5			
			22						0.45 V																	A_6			
			23							0.45 V																A_7			
			24									0.45 V														D_1			
			25											0.45 V												D_2			
			26													0.45 V										D_3			
			27															0.45 V								D_4			
			28																	0.45 V						CS_2			
			29																		0.45 V					$\overline{OE}$			
			30																			0.45 V				$\overline{CS}_1$			
			31																				0.45 V			$\overline{WE}$			
			32																					0.45 V		A_4			
	I_{IH1}	3010	33	5.5 V																						A_3		40	
			34		5.5 V																					A_2			
			35			5.5 V																				A_1			
			36				5.5 V																			A_0			
			37					5.5 V																		A_5			
			38						5.5 V																	A_6			
			39							5.5 V																A_7			
			40									5.5 V														D_1			
			41											5.5 V												D_2			
			42													5.5 V										D_3			
			43															5.5 V								D_4			
			44																	5.5 V						CS_2			
			45																		5.5 V					$\overline{OE}$			
			46																			5.5 V				$\overline{CS}_1$			
			47																				5.5 V			$\overline{WE}$			
			48																					5.5 V		A_4			
	I_{OHZ}		49									0.4 V	2.4 V	0.4 V	2.4 V					5.5 V	5.5 V	GND				Q_1	-50	50	
			50													0.4 V	2.4 V									Q_2			
			51															0.4 V	2.4 V							Q_3			
			52																							Q_4			
	I_{OLZ}		53									0.4 V	0.45	0.4 V	.45 V											Q_1			
			54													0.4 V	.45 V									Q_2			
			55															0.4 V	.45 V							Q_3			
			56																							Q_4			

See footnotes at end of table.

TABLE III. Group A inspection for device type 12 - Continued.
Terminal conditions (pins not designated may be high ≥2.1 V or low ≤0.8 V or open or GND)

Subgroup	Symbol	STD-883-method	Cases W,X / Case Y / Test no.	1 / 1 / A_3	2 / 2 / A_2	3 / 3 / A_1	4 / 4 / A_0	5 / 5 / A_5	6 / 7 / A_6	7 / 8 / A_7	8 / 9 / GND	9 / 10 / D_1	10 / 11 / Q_1	11 / 12 / D_2	12 / 13 / Q_2	13 / 14 / D_3	14 / 15 / Q_3	15 / 16 / D_4	16 / 17 / Q_4	17 / 19 / CS_2	18 / 20 / $\overline{OE}$	19 / 21 / $\overline{CS}_1$	20 / 22 / $\overline{WE}$	21 / 23 / A_4	22 / 24 / V_{CC}	Measured terminal	Test limits Min	Test limits Max	Unit
1 T_C = 25°C	V_{OL}	3007	57 58 59 60								GND	0.8 V	8 mA	0.8 V	8 mA	0.8 V	8 mA	0.8 V	8 mA	5.5 V	GND	GND	2/		4.5 V	Q_1 Q_2 Q_3 Q_4		.45	V
	V_{OH}	3006	61 62 63 64									2.1 V	-5.2 mA	2.1 V	-5.2 mA	2.1 V	-5.2 mA	2.1 V	-5.2 mA							Q_1 Q_2 Q_3 Q_4	2.4		
	I_{OS}		65 66 67 68	GND	GND	GND	GND	GND	GND	GND		5.5 V	GND	5.5 V	GND	5.5 V	GND	5.5 V	GND					GND	5.5 V	Q_1 Q_2 Q_3 Q_4	-10	-70	mA
	I_{CC}	3005	69																							V_{CC}		1/	
2	Same tests, terminal conditions, and limits as subgroup 1, except T_C = 125°C.																												
3	Same tests, terminal conditions, and limits as subgroup 1, except T_C = -55°C and I_{CC} (max) limit = 90 mA.																												
7 T_C = 25°C	Functional tests	3014	70	3/	3/	3/	3/	3/	3/	3/	GND	3/	3/	3/	3/	3/	3/	3/	3/	3/	3/	3/	3/	3/	3/	Q			
8	Same tests, terminal conditions, and limits as subgroup 7, except T_C = -55°C and I_{CC} (max) limit = 90 mA.																												
9 T_C = 25°C	TAVQV	Fig. 6	71	4/	4/	4/	4/	4/	4/	4/	GND	4/	5/	4/	5/	4/	5/	4/	5/	4/	4/	4/	4/	4/	4/	Q		75	ns
	TSVQV		72																									45	
	TSCQZ		73																									45	
	TWLQZ		74																									45	
	TWHQV		75																									50	
	TWLWH		76	6/	6/	6/	6/	6/	6/	6/		6/		6/		6/		6/		6/	6/	6/	6/	6/	6/		55		
	TWHDC		77																								5		
	TDCWL		78																								5		
	TAVWL		79																								10		
	TWHAC		80																								10		
	TSVWL		81																								5		
	TWHSC		82																								5		
10	Same tests, terminal conditions, and limits as subgroup 9, except T_C = 125°C.																												
11	Same tests, terminal conditions, and limits as subgroup 9, except T_C = -55°C.																												

See footnotes at end of table.

TABLE III. Group A inspection for device type 13.
Terminal conditions (pins not designated may be high ≥2.1 V or low ≤0.8 V, or open or GND)

Subgroup	Symbol	MIL-STD-883-method	Cases E,F Test no.	1 $\overline{CS}$	2 A_0	3 A_1	4 A_2	5 A_3	6 A_4	7 Q	8 GND	9 A_5	10 A_6	11 A_7	12 A_8	13 A_9	14 $\overline{WE}$	15 D_{IN}	16 V_{CC}	Measured terminal	Test limits Min	Test limits Max	Unit
1 T_C = 25°C	V_{IC}		1	-10 mA							GND								5.5 V	$\overline{CS}$		-1.5	V
			2		-10 mA															A_0			
			3			-10 mA														A_1			
			4				-10 mA													A_2			
			5					-10 mA												A_3			
			6						-10 mA											A_4			
			7									-10 mA								A_5			
			8										-10 mA							A_6			
			9											-10 mA						A_7			
			10												-10 mA					A_8			
			11													-10 mA				A_9			
			12														-10 mA			$\overline{WE}$			
			13															-10 mA		D_{IN}			
	I_{IL}	3009	14	0.45 V																$\overline{CS}$	-1.0	-400	μA
			15		0.45 V															A_0			
			16			0.45 V														A_1			
			17				0.45 V													A_2			
			18					0.45 V												A_3			
			19						0.45 V											A_4			
			20									0.45 V								A_5			
			21										0.45 V							A_6			
			22											0.45 V						A_7			
			23												0.45 V					A_8			
			24													0.45 V				A_9			
			25														0.45 V			$\overline{WE}$			
			26															0.45 V		D_{IN}			
	I_{IH1}	3010	27	5.5 V																$\overline{CS}$		40	
			28		5.5 V															A_0			
			29			5.5 V														A_1			
			30				5.5 V													A_2			
			31					5.5 V												A_3			
			32						5.5 V											A_4			
			33									5.5 V								A_5			
			34										5.5 V							A_6			
			35											5.5 V						A_7			
			36												5.5 V					A_8			
			37													5.5 V				A_9			
			38														5.5 V			$\overline{WE}$			
			39															5.5 V		D_{IN}			
	I_{OS}	3011	40	GND	GND	GND	GND	GND	GND	GND		GND	GND	GND	GND	GND	2/	5.5 V		Q	-20	-100	mA
	I_{CC}	3005	41	GND	GND	GND	GND	GND	GND			GND	GND	GND	GND	GND	GND	GND		V_{CC}		1/	mA
	I_{OHZ}		42	0.4 V	0.4 V	0.4 V	0.4 V	0.4 V	0.4 V	2.4 V		0.4 V	0.4 V	0.4 V	0.4 V	0.4 V	0.4 V	0.4 V		Q		50	μA
	I_{OLZ}		43	0.4 V	0.4 V	0.4 V	0.4 V	0.4 V	0.4 V	0.45 V		0.4 V	0.4 V	0.4 V	0.4 V	0.4 V	0.4 V	0.4 V		Q		-50	μA
	V_{OL}	3007	44	0.8 V	0.8 V	0.8 V	0.8 V	0.8 V	0.8 V	16 mA		0.8 V	0.8 V	0.8 V	0.8 V	0.8 V	2/	0.4 V	4.5 V	Q		0.45	V
	V_{OH}	3006	45	0.8 V	0.8 V	0.8 V	0.8 V	0.8 V	0.8 V	-5.2 mA		0.8 V	0.8 V	0.8 V	0.8 V	0.8 V	2/	2.1 V	4.5 V	Q	2.4		V
2	Same tests, terminal conditions, and limits as for subgroup 1, except T_C = 125°C and V_{IC} tests are omitted.																						
3	Same tests, terminal conditions, and limits as for subgroup 1, except T_C = -55°C and V_{IC} tests are omitted.																						

See footnotes at end of table.

TABLE III. Group A inspection for device type 13 - Continued.
Terminal conditions (pins not designated may be high ≥2.1 V or low ≤0.8 V, or open or GND)

Subgroup	Symbol	MIL-STD-883-method	Cases E,F Test no.	1 $\overline{CS}$	2 A_0	3 A_1	4 A_2	5 A_3	6 A_4	7 Q	8 GND	9 A_5	10 A_6	11 A_7	12 A_8	13 A_9	14 $\overline{WE}$	15 D_{IN}	16 V_{CC}	Measured terminal	Test limits Min	Test limits Max	Unit
7 T_C = 25°C	Functional tests	3014	46	3/	3/	3/	3/	3/	3/	3/	GND	3/	3/	3/	3/	3/	3/	3/	3/	Q		3/	
8	Same tests, terminal conditions, and limits as for subgroup 7, except T_C = 125°C and -55°C.																						
9 T_C = 25°C	TAVQV	GALPAT Fig. 6	47	4/	4/	4/	4/	4/	4/	5/	GND	4/	4/	4/	4/	4/	4/	4/	4/	Q		50	ns
	TSVQV		48																			35	
	TSCQZ		49																			35	
	TWLQZ		50																			45	
	TWHQV		51																			40	
	TWLWH	GGII Fig. 6	52	6/	6/	6/	6/	6/	6/			6/	6/	6/	6/	6/	6/	6/	6/		35		
	TWHDC		53																		5		
	TDCWL		54																		10		
	TAVWL		55																		10		
	TWHAC		56																		5		
	TSVWL		57																		10		
	TWHSC		58																		5		
10	Same tests, terminal conditions, and limits as for subgroup 9, except T_C = 125°C.																						
11	Same tests, terminal conditions, and limits as for subgroup 9, except T_C = -55°C.																						

See footnotes at end of table.

TABLE III. Group A inspection for device type 14.
Terminal conditions (pins not designated may be high ≥2.1 V or low ≤0.8 V or open or GND)

Subgroup	Symbol	MIL-STD-883-method	Cases W,X / Case Y / Test no.	1 / 1 / A_3	2 / 2 / A_2	3 / 3 / A_1	4 / 4 / A_0	5 / 5 / A_5	6 / 7 / A_6	7 / 8 / A_7	8 / 9 / GND	9 / 10 / D_1	10 / 11 / Q_1	11 / 12 / D_2	12 / 13 / Q_2	13 / 14 / D_3	14 / 15 / Q_3	15 / 16 / D_4	16 / 17 / Q_4	17 / 19 / CS_2	18 / 20 / $\overline{OE}$	19 / 21 / $\overline{CS}_1$	20 / 22 / $\overline{WE}$	21 / 23 / A_4	22 / 24 / V_{CC}	Measured terminal	Test limits Min	Test limits Max	Unit
1 T_C = 25°C	V_{IC}		1	-10 mA							GND														5.5 V	A_3		-1.5	V
			2		-10 mA																					A_2			
			3			-10 mA																				A_1			
			4				-10 mA																			A_0			
			5					-10 mA																		A_5			
			6						-10 mA																	A_6			
			7							-10 mA																A_7			
			8									-10 mA														D_1			
			9											-10 mA												D_2			
			10													-10 mA										D_3			
			11															-10 mA								D_4			
			12																	-10 mA						CS_2			
			13																		-10 mA					$\overline{OE}$			
			14																			-10 mA				$\overline{CS}_1$			
			15																				-10 mA			$\overline{WE}$			
			16																					-10 mA		A_4			
	I_{IL}	3009	17	0.45 V																						A_3	-10	-300	μA
			18		0.45 V																					A_2			
			19			0.45 V																				A_1			
			20				0.45 V																			A_0			
			21					0.45 V																		A_5			
			22						0.45 V																	A_6			
			23							0.45 V																A_7			
			24									0.45 V														D_1			
			25											0.45 V												D_2			
			26													0.45 V										D_3			
			27															0.45 V								D_4			
			28																	0.45 V						CS_2			
			29																		0.45 V					$\overline{OE}$			
			30																			0.45 V				$\overline{CS}_1$			
			31																				0.45 V			$\overline{WE}$			
			32																					0.45 V		A_4			
	I_{IH1}	3010	33	5.5 V																						A_3		40	
			34		5.5 V																					A_2			
			35			5.5 V																				A_1			
			36				5.5 V																			A_0			
			37					5.5 V																		A_5			
			38						5.5 V																	A_6			
			39							5.5 V																A_7			
			40									5.5 V														D_1			
			41											5.5 V												D_2			
			42													5.5 V										D_3			
			43															5.5 V								D_4			
			44																	5.5 V						CS_2			
			45																		5.5 V					$\overline{OE}$			
			46																			5.5 V				$\overline{CS}_1$			
			47																				5.5 V			$\overline{WE}$			
			48																					5.5 V		A_4			
	I_{OHZ}		49									0.4 V	2.4 V							5.5 V	5.5 V	GND				Q_1	-50	50	
			50											0.4 V	2.4 V											Q_2			
			51													0.4 V	2.4 V									Q_3			
			52															0.4 V	2.4 V							Q_4			
	I_{OLZ}		53									0.4 V	0.45													Q_1			
			54											0.4 V	0.45 V											Q_2			
			55													0.4 V	0.45 V									Q_3			
			56															0.4 V	0.45 V							Q_4			
	V_{OL}	3007	57									0.8 V	8 mA	GND	GND	GND	GND	GND	GND		GND		2/		4.5 V	Q_1		.45	V
			58									GND	GND	0.8 V	8 mA	GND	GND	GND	GND							Q_2			
			59									GND	GND	GND	GND	0.8 V	8 mA	GND	GND							Q_3			
			60									GND	GND	GND	GND	GND	GND	0.8 V	8 mA							Q_4			

See footnotes at end of table.

TABLE III. Group A inspection for device type 14 - Continued.
Terminal conditions (pins not designated may be high ≥2.1 V or low ≤0.8 V or open or GND)

Subgroup	Symbol	STD-883-method	Cases W,X / Case Y / Test no.	1 / 1 / A_3	2 / 2 / A_2	3 / 3 / A_1	4 / 4 / A_0	5 / 5 / A_5	6 / 7 / A_6	7 / 8 / A_7	8 / 9 / GND	9 / 10 / D_1	10 / 11 / Q_1	11 / 12 / D_2	12 / 13 / Q_2	13 / 14 / D_3	14 / 15 / Q_3	15 / 16 / D_4	16 / 17 / Q_4	17 / 19 / CS_2	18 / 20 / $\overline{OE}$	19 / 21 / $\overline{CS}_1$	20 / 22 / $\overline{WE}$	21 / 23 / A_4	22 / 24 / V_{CC}	Measured terminal	Test limits Min	Test limits Max	Unit
1 T_C = 25°C	V_{OH}	3006	61 62 63 64								GND	2.1 V	-5.2 mA	2.1 V	-5.2 mA	2.1 V	-5.1 mA	2.1 V	-5.2 mA	5.5 V	GND	GND	2/		4.5 V	Q_1 Q_2 Q_3 Q_4	2.4		V
	I_{OS}		65 66 67 68	GND	GND	GND	GND	GND	GND	GND		5.5 V	GND	5.5 V	GND	5.5 V	GND	5.5 V	GND					GND	5.5 V	Q_1 Q_2 Q_3 Q_4	-10	-70	mA
	I_{CC}	3005	69																							V_{CC}		1/	
2	Same tests, terminal conditions, and limits as subgroup 1, except T_C = 125°C.																												
3	Same tests, terminal conditions, and limits as subgroup 1, except T_C = -55°C.																												
7 T_C = 25°C	Functional tests	3014	70	3/	3/	3/	3/	3/	3/	3/	GND	3/	3/	3/	3/	3/	3/	3/	3/	3/	3/	3/	3/	3/	3/	Q			
8	Same tests, terminal conditions, and limits as subgroup 7, except T_C = 125°C and -55°C.																												
9 T_C = 25°C	TAVQV	Fig. 6	71	4/	4/	4/	4/	4/	4/	4/	GND	4/	5/	4/	5/	4/	5/	4/	5/	4/	4/	4/	4/	4/	4/	Q		45	ns
	TSVQV		72																									35	
	TSCQZ		73																									35	
	TWLQZ		74																									45	
	TWHQV		75																									40	
	TELQV		76																									35	
	TEHQZ		77																									35	
	TWLWH		78	6/	6/	6/	6/	6/	6/	6/		6/		6/		6/		6/		6/	6/	6/	6/	6/	6/		35		
	TWHDC		79																								5		
	TDCWL		80																								5		
	TAVWL		81																								5		
	TWHAC		82																								5		
	TSVWL		83																								5		
	TWHSC		84																								5		
10	Same tests, terminal conditions, and limits as subgroup 9, except T_C = 125°C.																												
11	Same tests, terminal conditions, and limits as subgroup 9, except T_C = -55°C.																												

See footnotes at end of table.

TABLE III. Group A inspection for device type 15.
Terminal conditions (pins not designated may be high ≥2.1 V or low ≤0.8 V or open or GND)

Subgroup	Symbol	MIL-STD-883-method	Cases W,X / Case Y / Test no.	1 / 1 / A_3	2 / 2 / A_2	3 / 3 / A_1	4 / 4 / A_0	5 / 5 / A_5	6 / 7 / A_6	7 / 8 / A_7	8 / 9 / GND	9 / 10 / D_1	10 / 11 / Q_1	11 / 12 / D_2	12 / 13 / Q_2	13 / 14 / D_3	14 / 15 / Q_3	15 / 16 / D_4	16 / 17 / Q_4	17 / 19 / CS_2	18 / 20 / $\overline{OE}$	19 / 21 / $\overline{CS}_1$	20 / 22 / $\overline{WE}$	21 / 23 / A_4	22 / 24 / V_{CC}	Measured terminal	Test limits Min	Test limits Max	Unit
1 T_C = 25°C	V_{IC}		1	-10 mA							GND														5.5 V	A_3		-1.5	V
			2		-10 mA																					A_2			
			3			-10 mA																				A_1			
			4				-10 mA																			A_0			
			5					-10 mA																		A_5			
			6						-10 mA																	A_6			
			7							-10 mA																A_7			
			8									-10 mA														D_1			
			9											-10 mA												D_2			
			10													-10 mA										D_3			
			11															-10 mA								D_4			
			12																	-10 mA						$\overline{CS}_2$			
			13																		-10 mA					$\overline{OE}$			
			14																			-10 mA				$\overline{CS}_1$			
			15																				-10 mA			$\overline{WE}$			
			16																					-10 mA		A_4			
	I_{IL}	3009	17	0.45 V																						A_3	-10	-300	μA
			18		0.45 V																					A_2			
			19			0.45 V																				A_1			
			20				0.45 V																			A_0			
			21					0.45 V																		A_5			
			22						0.45 V																	A_6			
			23							0.45 V																A_7			
			24									0.45 V														D_1			
			25											0.45 V												D_2			
			26													0.45 V										D_3			
			27															0.45 V								D_4			
			28																	0.45 V						$\overline{CS}_2$			
			29																		0.45 V					$\overline{OE}$			
			30																			0.45 V				$\overline{CS}_1$			
			31																				0.45 V			$\overline{WE}$			
			32																					0.45 V		A_4			
	I_{IH1}	3010	33	5.5 V																						A_3		40	
			34		5.5 V																					A_2			
			35			5.5 V																				A_1			
			36				5.5 V																			A_0			
			37					5.5 V																		A_5			
			38						5.5 V																	A_6			
			39							5.5 V																A_7			
			40									5.5 V														D_1			
			41											5.5 V												D_2			
			42													5.5 V										D_3			
			43															5.5 V								D_4			
			44																	5.5 V						$\overline{CS}_2$			
			45																		5.5 V					$\overline{OE}$			
			46																			5.5 V				$\overline{CS}_1$			
			47																				5.5 V			$\overline{WE}$			
			48																					5.5 V		A_4			
	I_{OHZ}		49									0.4 V	2.4 V							5.5 V	5.5 V	GND				Q_1	-50	50	
			50											0.4 V	2.4 V											Q_2			
			51													0.4 V	2.4 V									Q_3			
			52															0.4 V	2.4 V							Q_4			
	I_{OLZ}		53									0.4 V	0.45													Q_1			
			54											0.4 V	0.45 V											Q_2			
			55													0.4 V	0.45 V									Q_3			
			56															0.4 V	0.45 V							Q_4			
	V_{OL}	3007	57									0.8 V	8 mA								GND		2/		4.5 V	Q_1		.45	V
			58											0.8 V	8 mA											Q_2			
			59													0.8 V	8 mA									Q_3			
			60															0.8 V	8 mA							Q_4			

See footnotes at end of table.

TABLE III. Group A inspection for device type 15 - Continued.
Terminal conditions (pins not designated may be high ≥2.1 V or low ≤0.8 V or open or GND)

Subgroup	Symbol	STD-883-method	Cases W,X / Case Y / Test no.	1 / 1 / A_3	2 / 2 / A_2	3 / 3 / A_1	4 / 4 / A_0	5 / 5 / A_5	6 / 7 / A_6	7 / 8 / A_7	8 / 9 / GND	9 / 10 / D_1	10 / 11 / Q_1	11 / 12 / D_2	12 / 13 / Q_2	13 / 14 / D_3	14 / 15 / Q_3	15 / 16 / D_4	16 / 17 / Q_4	17 / 19 / CS_2	18 / 20 / $\overline{OE}$	19 / 21 / $\overline{CS_1}$	20 / 22 / $\overline{WE}$	21 / 23 / A_4	22 / 24 / V_{CC}	Measured terminal	Test limits Min	Test limits Max	Unit
1 T_C = 25°C	V_{OH}	3006	61								GND	2.1 V	-5.2 mA	2.1 V	-5.2 mA					5.5 V	GND	GND	2/		4.5 V	Q_1	2.4		V
			62													2.1 V	-5.1 mA									Q_2			
			63															2.1 V	-5.2 mA							Q_3			
			64																							Q_4			
	I_{OS}		65	GND	GND	GND	GND	GND	GND	GND		5.5 V	GND	5.5 V	GND									GND	5.5 V	Q_1	-10	-70	mA
			66													5.5 V	GND									Q_2			
			67															5.5 V	GND							Q_3			
			68																							Q_4			
	I_{CC}	3005	69																							V_{CC}		1/	
2	Same tests, terminal conditions, and limits as subgroup 1, except T_C = 125°C.																												
3	Same tests, terminal conditions, and limits as subgroup 1, except T_C = -55°C and I_{CC} (max) limit = 90 mA.																												
7 T_C = 25°C	Functional tests	3014	70	3/	3/	3/	3/	3/	3/	3/	GND	3/	3/	3/	3/	3/	3/	3/	3/	3/	3/	3/	3/	3/	3/	Q			
8	Same tests, terminal conditions, and limits as subgroup 7, except T_C = -55°C and I_{CC} (max) limit = 90 mA.																												
9 T_C = 25°C	TAVQV	Fig. 6	71	4/	4/	4/	4/	4/	4/	4/	GND	4/	5/	4/	5/	4/	5/	4/	5/	4/	4/	4/	4/	4/	4/	Q		55	ns
	TSVQV		72																									40	
	TSCQZ		73																									40	
	TWLQZ		74																									45	
	TWHQV		75																									45	
	TELQV		76																									40	
	TEHQZ		77																									40	
	TWLWH		78	6/	6/	6/	6/	6/	6/	6/		6/		6/		6/		6/		6/	6/	6/	6/	6/	6/		40		
	TWHDC		79																								5		
	TDCWL		80																								10		
	TAVWL		81																								10		
	TWHAC		82																								5		
	TSVWL		83																								10		
	TWHSC		84																								5		
10	Same tests, terminal conditions, and limits as subgroup 9, except T_C = 125°C.																												
11	Same tests, terminal conditions, and limits as subgroup 9, except T_C = -55°C.																												

See footnotes at end of table.

NOTES:

1/ The I_{CC} are as follows:

Device type	25°C	125°C	-55°C
01,02,05,06, 07,08,09,10,14	155 mA	130 mA	170 mA
03, 04,13	65 mA	55 mA	75 mA
11, 12,15	80 mA	70 mA	90 mA

2/ Toggle from $\geq$3.0 V to 0.4 V and return.

3/ The functional tests shall verify the truth table of figure 3. All bits shall be tested. Terminal conditions shall be as follows:

a. Inputs: H = 2.1 V, L = 0.8 V
b. Outputs: Output voltage shall be either:
   1. H = 2.4 V minimum and L = 0.5 V maximum, when using a high-speed checker double comparator, or
   2. H $\geq$1.5 V and L <1.5 V, when using a high-speed checker single comparator.
c. The functional tests shall be performed with V_{CC} = 4.5 V and V_{CC} = 5.5 V.

4/ GALPAT. This program will test all bits in the array, the addressing and interaction between bits for ac performance, TAVQV, TSVQV, TSCQV, TWZQV, and TWHQV, the memory is initialized by writing a field of "H" and then a field of "L".

Description
1. Write an "H" in word 0.
2. Word 0 is read.
3. Word 1 is read.
4. Word 0 is read.
5. Word 2 is read.
6. Word 0 is read.
7. The reading procedure continues back and forth between word 0 and the next higher numbered word until word 1024 is reached, then increments to the next word and reads back and forth as in steps 1 through 7 and shall include all words.
8. Pass execution time = $(n^2 + n)$ x cycle time. n = 1024.
9. The GALPAT tests shall be performed with V_{CC} = 4.5 V and 5.5 V.

5/ The outputs shall be loaded per load A of figure 6.

6/ Galloping Galwresh (with row column ping pong read GGII)
The Galloping Galwresh (GG) is started by first writing a field of zeros and then a field of ones into the memory under test (MUT). The following sequence is then performed.

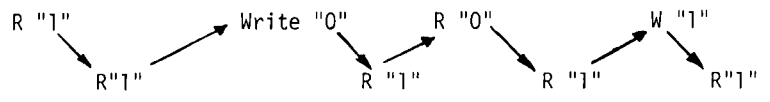

The background bits are read in ping-pong fashion in the Row/Column of the test bit. The sequence is repeated for the next test bit (Y advancing X) until the test bit reaches Xmax Ymax. The inverse pattern is then performed with V_{CC} = 4.5 and 5.5 V.

7/ For device type 05 and 06, t_{WHAC} and t_{AVWL} = 10 ns.

4.4.3 Group C inspection. Group C inspection shall be in accordance with table III of method 5005 of MIL-STD-883 and as follows:

a. End-point electrical tests shall be as specified in table II herein.

b. Subgroups 3 and 4 shall be added to the group c inspection requirements for class C devices and shall consist of the tests, conditions, and limits specified for subgroups 10 and 11 of group A inspection.

c. Steady state life test (method 1005 of MIL-STD-883) conditions:

(1) Test condition D or E, using the circuit shown on figure 5, or equivalent.

(2) T_A = 125°C minimum.

(3) Test duration: 1,000 hours, except as permitted by appendix B of MIL-M-38510 and method 1005 of MIL-STD-883.

4.4.4 Group D inspection. Group D inspection shall be in accordance with table IV of method 5005 of MIL-STD-883. End-point electrical tests shall be as specified in table II herein.

4.4.5 Inspection of packaging. The inspection of packaging shall be as specified in MIL-M-38510.

4.5 Methods of inspection. Methods of inspection shall be as specified in the appropriate tables and as specified herein.

4.5.1 Voltage and current. All voltages given are referenced to the microcircuit ground terminal. Currents given are conventional and positive when flowing into the referenced terminal.

5. PACKAGING

5.1 Packaging requirements. The requirements for packaging shall be as specified in MIL-M-38510.

6. NOTES

6.1 Notes. The notes specified in MIL-M-38510 are applicable to this specification.

6.2 Intended use. Microcircuits conforming to this specification are intended for original equipment design applications and logisitic support of existing equipment.

6.3 Ordering data. The contract or purchase order should specify the following:

a. Complete part number (see 1.2).

b. Requirements for delivery of one copy of the quality conformance inspection data pertinent to the device inspection lot to be supplied with each shipment by the device manufacturer, if applicable.

c. Requirements for certificate of compliance, if applicable.

d. Requirements for notification of change of product or process to the contracting activity in addition to notification to the qualifying activity, if applicable.

e. Requirements for packaging and packing.

f. Requirements for failure analysis (including required test condition of method 5003 of MIL-STD-883), corrective action, and reporting of results, if applicable.

g. Requirements for product assurance options.

h. Requirements for special carriers, lead lengths, or lead forming, if applicable, These requirements shall not affect the part number. Unless otherwise specified, these requirements will not apply to direct purchase by or direct shipment to the Government.

i. Requirements for "JAN" marking.

6.4 Abbreviations, symbols, and definitions. The abbreviations, symbols, and definitions used herein are defined in MIL-M-38510, MIL-STD-1331, and as follows:

GND	Electrical ground (common terminal)
I_{OHZ}	High impedance (off-state) output high current
I_{OLZ}	High impedance (off-state) output low current
V_{IC}	Input clamp voltage
V_{IN}	Voltage level at an input terminal
TAVQV	Address access time
TSLQV	Chip select time
TWLWH	Write pulse width
TSCQV	Chip select output disable time
TWHAC	Address hold time after write
TDCWL	Data setup time prior to write
TWHSC	Chip select hold time after write
TWHQV	Write recovery time
TWLQV	Write setup time
TAVWL	Address setup time prior to write
TSVWL	Chip select setup time prior to write
TWHOC	Data hold time after write
TSCQZ	Chip select disable time to high impedance
TWLQZ	Write enable time to high impedance
TELQV	Output select time
TEHQZ	Output select disable time to high Z
TEHQV	Output select disable time

6.4.1 Timing parameter abbreviations. All timing abbreviations use upper case characters with no subscripts. The initial character is always T and is followed by four desciptors. These characters specify two signal points arranged in a "from-to" sequence that define a timing iterval. The two descriptors for each signal point specify the signal name and the signal transitions. Thus the format is:

T X X X X

Signal name from which interval is defined
Transition direction for first signal
Signal name to which interval is defined
Transition direction for second signal

a. Signal definitions:
A = Address
D = Data in
Q = Data out
W = Write enable
E = Chip enable
S = Chip select
G = Output enable
C = Change

b. Transition definitions:
H = Transition to high
L = Transition to low
V = Transition to valid
X = Transition to invalid or don't care
Z = Transition to off (high impedance)

6.5 Logistic support. Lead materials and finishes (see 3.3), are interchangeable. Unless otherwise specified, microcircuits acquired for Government logistic support will be acquired to device class B (see 1.2.2), and lead material and finish C (see 3.3). Longer lead lengths and lead forming shall not affect the part number.

6.6 Substitutability. The cross-reference information below is presented for the convenience of users. Microcircuits covered by this specification will functionally replace the listed generic-industry type. Generic-industry microcircuit types may not have equivalent operational performance characteristics across military temperature ranges or reliability factors equivalent to MIL-M-38510 device types and may have slight physical variations in relation to case size. The presence of this information shall not be deemed as permitting substitution of generic-industry types for MIL-M-38510 types or as a waiver of any of the provisions of MIL-M-38510.

Military device type	Generic-industry type
01	93415
02	93425
03	93L415
04	93L425
05	93415
06	93425
07	93415, 82S10
08	93425A, 82S11
09	93412
10	93422
11	93L412
12	93L422
13	93L425A
14	93422A
15	93L422A

6.8 Changes from previous issue. Asterisks are not used in this revision to identify changes with respect to the previous issue, due to the extensiveness of the changes.

Custodians:
Army - ER
Navy - EC
Air Force - 17
NASA - NA

Review activities:
Army - MI
Air Force - 11, 19, 85, 99
DLA - ES

User activities:
Army - AR, SM
Navy - AS, CG, MC, OS, SH

Preparing activity:
Air Force - 17

(Project 5962-0488)