MIL-M-38510/28B(USAF)
2 August 1974
SUPERSEDING
MIL-M-38510/28(USAF)
21 August 1972

MILITARY SPECIFICATION

MICROCIRCUITS, DIGITAL TTL, LOW POWER SHIFT REGISTERS MONOLITHIC SILICON

1. SCOPE

1.1 Scope. This specification covers the requirements for monolithic silicon, TTL, low power shift register microcircuits. Three product assurance classes and a choice of case outline/lead finish are provided for each type and are reflected in the complete part number.

1.2 Part number. The complete part number shall be as shown in the following example:

M38510	/028	01	B	A	C
Military designator	Detail specification	Device type (1.2.1)	Device class (1.2.2)	Case outline (1.2.3)	Lead finish (3.3)

1.2.1 Device type. The device type shall be as shown in the following:

Device type	Circuit
01	4-bit right-shift, left-shift register
02	8-bit parallel-out, serial shift register
03	Dual, 8-bit shift register
04	4-bit shift register
05	8-bit parallel-out, serial shift register

1.2.2 Device class. The device class shall be the product assurance level as defined in MIL-M-38510.

1.2.3 Case outline. The case outline shall be designated as follows:

Letter	Case outline, MIL-M-38510, appendix C
A	F-1 (14-pin, 1/4" x 1/4" flat pack)
B	F-3 (14-pin, 1/8" x 1/4" flat pack)
C	D-1 (14-pin, 1/4" x 3/4" dual-in-line pack)
D	F-2 (14-pin, 1/4" x 7/8" flat pack)
E	F-5 (16-pin, 1/4" x 3/8" flat pack)
F	D-2 (16-pin, 1/4" x 7/8" dual-in-line pack)

1.3 Absolute maximum ratings.

Supply voltage range	
Device type 01 - - - - - - - -	0 Vdc to 8.0 Vdc
Device type 02 - - - - - - - -	0 Vdc to 7.0 Vdc
Device type 03 - - - - - - - -	-0.5 Vdc to 7.0 Vdc
Device type 04 - - - - - - - -	-0.5 Vdc to 7.0 Vdc
Device type 05 - - - - - - - -	0 Vdc to 7.0 Vdc
Input voltage range - - - - - -	0 Vdc to 6.0 Vdc
Storage temperature range - - -	-65°C to 150°C

Maximum power dissipation per register, P_D

Device type 01 - - - - - - - - -	20 mW
Device type 02 - - - - - - - - -	120 mW
Device type 03 - - - - - - - - -	134 mW
Device type 04 - - - - - - - - -	124 mW
Device type 05 - - - - - - - - -	52 mW
Lead temperature (soldering 10 seconds) - - - -	300°C
Thermal resistance, junction to case - - - - - - - - - - - -	θ_{JC} = 0.09°C/mW for flat pack; 0.08°C/mW for dual-in-line pack
Junction temperature - - - - - -	T_J = 175°C

1.4 Recommended operating conditions.

Supply voltage - - - - - - - - - -	4.5 Vdc min to 5.5 Vdc maximum
Minimum high level input voltage - - - - - - - - - - - -	2.0 Vdc
Maximum low level input voltage	
Device type 01 - - - - - - - - -	0.7 Vdc
Device type 02 - - - - - - - - -	0.8 Vdc
Device type 03 - - - - - - - - -	0.7 Vdc
Device type 04 - - - - - - - - -	0.7 Vdc
Device type 05 - - - - - - - - -	0.7 Vdc
Ambient operating temperature range - - - - - - - - - - - - -	-55°C to 125°C
Fanout	
Device type 01	
High logic level - - - - - -	0.1 mA
Low logic level - - - - - -	2.0 mA
Device type 02	
High logic level - - - - - -	0.2 mA
Low logic level - - - - - -	4.0 mA
Device types 03 and 04	
High logic level - - - - - -	0.32 mA
Low logic level - - - - - -	3.2 mA
Device type 05	
High logic level - - - - - -	0.2 mA
Low logic level - - - - - -	2.0 mA

2. APPLICABLE DOCUMENT

2.1 The following document, of the issue in effect on date of invitation for bids or request for proposal, forms a part of this specification to the extent specified herein.

SPECIFICATION

MILITARY

MIL-M-38510 - Microcircuits, General Specification for.

(Copies of specifications, standards, drawings, and publications required by suppliers in connection with specific procurement functions should be obtained from the procuring activity or as directed by the contracting officer.)

3. REQUIREMENTS

3.1 Detail specifications. The individual item requirements shall be in accordance with MIL-M-38510, and as specified herein.

3.2 Design, construction, and physical dimensions. The design, construction, and physical dimensions shall be as specified in MIL-M-38510 and herein.

3.2.1 Terminal connections. The terminal connections shall be as specified on figure 1.

3.2.2 Logic diagram. The logic diagram shall be as specified on figure 2.

3.2.3 Truth tables and logic equations. The truth tables and logic equations shall be as specified on figure 3.

3.2.4 Schematic circuit. The schematic circuit shall be as specified on figure 4.

3.2.5 Case outlines. Case outlines shall be as specified in 1.2.3.

3.3 Lead material and finish. Lead material and finish shall be in accordance with MIL-M-38510.

3.4 Electrical performance characteristics. The electrical performance characteristics are as specified in table I and apply over the full recommended ambient operating temperature range, unless otherwise specified.

3.5 Rebonding. Rebonding shall be in accordance with MIL-M-38510.

3.6 Electrical test requirements. Electrical test requirements shall be as specified in table III for the applicable device type and device class. The subgroups of table III which constitute the minimum electrical test requirements for screening, qualification and quality conformance, by device class are specified in table II. Subgroups 7 and 8 do not apply to device type 03.

3.7 Marking. Marking shall be in accordance with MIL-M-38510 and 1.2 herein. At the option of the manufacturer, the following marking may be omitted from the body of the microcircuit, but shall be retained on the initial container:

(a) Country of origin.

4. PRODUCT ASSURANCE PROVISIONS

4.1 Sampling and inspection. Sampling and inspection procedures shall be in accordance with MIL-M-38510 and method 5005 of MIL-STD-883, except as modified herein.

4.2 Qualification inspection. Qualification inspection shall be in accordance with MIL-M-38510. Inspections to be performed shall be those specified herein for groups A, B, and C inspections (see 4.4.1, 4.4.2, and 4.4.3). After qualification of one or more electrically and structurally similar types with a single lead finish, other lead finishes of the same case outline may be qualified by submitting a single type in the qualified case outline to the group B, subgroup 3 test and the group C, subgroups 1, 3, and 4 tests.

4.3 Screening. Screening shall be in accordance with method 5004 of MIL-STD-883, and shall be conducted on all devices prior to qualification and quality conformance inspection. The following additional criteria shall apply:

(a) Test samples for the group B bond strength test specified in method 5005 of MIL-STD-883 may, at the manufacturer's option, be randomly selected immediately following the internal visual (precap) inspection and prior to sealing (see 4.4.2(a)).

TABLE I. Electrical performance characteristics.

Test	Symbol	Conditions	Device type	Limits Min	Limits Max	Units
High-level output voltage	V_{OH}	V_{CC} = 4.5 V, V_{IH} = 2.0 V, I_{OH} = -100 μA, V_{IL} = 0.7 V	01	2.4	---	Volts
		V_{CC} = 4.5 V, V_{IH} = 2 V, V_{IL} = 0.8 V, I_{OH} = -200 μA	02	2.4	---	Volts
		V_{CC} = 4.5 V, V_{IH} = 2 V, V_{IL} = 0.7 V, I_{OH} = -320 μA	03	2.4	---	Volts
		V_{CC} = 4.5 V, V_{IH} = 2 V, V_{IL} = 0.7 V, I_{OH} = -320 μA	04	2.4	---	Volts
		V_{CC} = 4.5 V, V_{IH} = 2 V, V_{IL} = 0.7 V, I_{OH} = -200 μA	05	2.4	---	Volts
Low-level output voltage	V_{OL}	V_{CC} = 4.5 V, V_{IH} = 2 V, V_{IL} = 0.7 V, I_{OL} = 2 mA	01	---	0.3	Volts
		V_{CC} = 4.5 V, V_{IH} = 2 V, V_{IL} = 0.8 V, I_{OL} = 4 mA	02	---	0.4	Volts
		V_{CC} = 4.5 V, V_{IH} = 2 V, V_{IL} = 0.7 V, I_{OL} = 3.2 mA	03	---	0.3	Volts
		V_{CC} = 4.5 V, V_{IH} = 2 V, V_{IL} = 0.7 V, I_{OL} = 3.2 mA	04	---	0.3	Volts
		V_{CC} = 4.5 V, V_{IH} = 2 V, V_{IL} = 0.7 V, I_{OL} = 2 mA	05	---	0.3	Volts
High-level input voltage	V_{IH}	V_{CC} = 4.5 V	All	2.0	---	Volts
Low-level input voltage	V_{IL}	V_{CC} = 4.5 V	01,03, 04,05		0.7	Volts
		V_{CC} = 4.5 V	02		0.8	Volts
High-level input current at any input except mode control	I_{IH1}	V_{CC} = 5.5 V, V_{IN} = 2.4 V	01	---	10	μA
	I_{IH2}	V_{CC} = 5.5 V, V_{IN} = 5.5 V	01	---	100	μA
High-level input current at mode control	I_{IH3}	V_{CC} = 5.5 V, V_{IN} = 2.4 V	01	---	20	μA
	I_{IH4}	V_{CC} = 5.5 V, V_{IN} = 5.5 V	01	---	200	μA
High-level input current	I_{IH1}	V_{CC} = 5.5 V, V_{IN} = 2.4 V	02	---	20	μA
	I_{IH2}	V_{CC} = 5.5 V, V_{IN} = 5.5 V	02		100	μA
High-level input current at $\overline{MR}$, D_0, and D_1	I_{IH1}	V_{CC} = 5.5 V, V_{IN} = 2.4 V	03		20	μA
High-level input current at CP	I_{IH2}	V_{CC} = 5.5 V, V_{IN} = 2.4 V	03		30	μA
High-level input current at D_S	I_{IH3}	V_{CC} = 5.5 V, V_{IN} = 2.4 V	03		40	μA
High-level input current at CP COMMON	I_{IH4}	V_{CC} = 5.5 V, V_{IN} = 2.4 V	03		60	μA
High-level input current, all inputs	I_{IH5}	V_{CC} = 5.5 V, V_{IN} = 5.5 V	03		100	μA
High-level input current at J, $\overline{K}$, $\overline{MR}$, P_0, P_1, P_2, P_3	I_{IH1}	V_{CC} = 5.5 V, V_{IN} = 2.4 V	04		20	μA

TABLE I. Electrical performance characteristics. - Continued

Test	Symbol	Conditions	Device type	Limits Min	Limits Max	Units
High-level input current at CP	I_{IH2}	V_{CC} = 5.5 V, V_{IN} = 2.4 V	04		40	µA
High-level input current at $\overline{PE}$	I_{IH3}	V_{CC} = 5.5 V, V_{IN} = 2.4 V	04		46	µA
High-level input current, all inputs	I_{IH4}	V_{CC} = 5.5 V, V_{IN} = 5.5 V	04		100	µA
High-level input current, except clear	I_{IH1}	V_{CC} = 5.5 V, V_{IN} = 2.4 V	05		10	µA
High-level input current, clear input	I_{IH2}	V_{CC} = 5.5 V, V_{IN} = 2.4 V	05		20	µA
High-level input current, except clear	I_{IH3}	V_{CC} = 5.5 V, V_{IN} = 5.5 V	05		100	µA
High-level input current, clear input	I_{IH4}	V_{CC} = 5.5 V, V_{IN} = 5.5 V	05		200	µA
Low-level input current at any input except mode control	I_{IL1}	V_{CC} = 5.5 V, V_{IN} = 0.3 V	01	-0.06	-0.18	mA
Low-level input current at mode control	I_{IL2}	V_{CC} = 5.5 V, V_{IN} = 0.3 V	01	-0.12	-0.36	mA
Low-level input current	I_{IL}	V_{CC} = 5.5 V, V_{IN} = 0.4 V	02	-0.35	-0.8	mA
Low-level input current at $\overline{MR}$, D_0 and D_1	I_{IL1}	V_{CC} = 5.5 V, V_{IN} = 0.3 V	03	-0.12	-0.4	mA
Low-level input current at CP	I_{IL2}	V_{CC} = 5.5 V, V_{IN} = 0.3 V	03	-0.25	-0.6	mA
Low-level input current at D_S	I_{IL3}	V_{CC} = 5.5 V, V_{IN} = 0.3 V	03	-0.24	-0.8	mA
Low-level input current at CP COMMON	I_{IL4}	V_{CC} = 5.5 V, V_{IN} = 0.3 V	03	-0.36	-1.2	mA
Low-level input current at $\overline{J}$, $\overline{K}$, $\overline{MR}$, P_0, P_1, P_2, P_3	I_{IL1}	V_{CC} = 5.5 V, V_{IN} = 0.3 V	04	-0.12	-0.4	mA
Low-level input current at CP	I_{IL2}	V_{CC} = 5.5 V, V_{IN} = 0.3 V	04	-0.35	-0.8	mA
Low-level input current at $\overline{PE}$	I_{IL3}	V_{CC} = 5.5 V, V_{IN} = 0.3 V	04	-0.36	-0.92	mA
Low-level input current, except clear	I_{IL1}	V_{CC} = 5.5 V, V_{IN} = 0.3 V	05	-0.06	-0.18	mA
Low-level input current, clear input	I_{IL2}	V_{CC} = 5.5 V, V_{IN} = 0.3 V	05	-0.12	-0.36	mA
Short-circuit output current	I_{OS}	V_{CC} = 5.5 V 1/, V_{IN} = 4.5 V	01	-3	-15	mA
		V_{CC} = 5.5 V 1/	02	-3	-20	mA
		V_{CC} = 5.5 V, V_{OUT} = 0 V 1/	03	-2.5	-25	mA
		V_{CC} = 5.5 V, V_{OUT} = 0 V 1/	04	-2.5	-25	mA
		V_{CC} = 5.5 V, V_{OUT} = 0 V 1/	05	-3	-15	mA
Supply current	I_{CC}	V_{CC} = 5.5 V, V_{IH} = 4.5 V, V_{IL} = 0 2/	01	---	9	mA
		V_{CC} = 5.5 V, V_{IH} = 4.5 V 2/	02	---	27	mA
		V_{CC} = 5.5 V 2/	03		25.3	mA
		V_{CC} = 5.5 V 2/	04		23	mA
		V_{CC} = 5.5 V 2/	05		9	mA

TABLE I. Electrical performance characteristics. - Continued

Test	Symbol	Conditions	Device type	Limits Min	Limits Max	Units
Maximum shift frequency	f_{MAX}	V_{CC} = 5 V, C_L = 50 pF, R_L = 4 kΩ (see figure 6)	01	3	---	MHz
Propagation delay time, low-to-high level from clock 1 or clock 2 to outputs	t_{PLH}				250	ns
Propagation delay time, high-to-low level from clock 1 or clock 2 to outputs	t_{PHL}				250	ns
Low level setup time at mode control with respect to clock 1 input	t_1			225	---	ns
High level setup time at mode control with respect to clock 2 input	t_2			200	---	ns
Low level setup time at mode control with respect to clock 2 input	t_3			0	---	ns
High level setup time at mode control with respect to clock 1 input	t_4			100	---	ns
Width of clock pulse	t_p	See figure 6	01	200	---	ns
Setup time required at serial A, B, C, D inputs	$t_{SETUP(H)}$ $t_{SETUP(L)}$	See figure 6	01	100	--- ---	ns ns
Hold time required at serial A, B, C, D inputs	$t_{HOLD(H)}$ $t_{HOLD(L)}$	See figure 6	01	0 0	--- ---	ns ns
Maximum clock frequency	f_{MAX}	V_{CC} = 5 V, C_L = 50 pF, R_L = 800Ω (figure 7)	02	12	---	MHz
Propagation delay time, high-to-low level, clear input to Q outputs	t_{PHL1}			10	110	ns
Propagation delay time, high-to-low level, clock input to Q outputs	t_{PHL2}			10	100	ns
Propagation delay time, low-to-high level, clock input to Q outputs	t_{PLH2}			10	80	ns
Width of clock or clear pulse	t_p			40	---	ns
Data setup time	$t_{SETUP(H)}$ $t_{SETUP(L)}$			30 30	--- ---	ns ns
Data hold time	$t_{HOLD(H)}$ $t_{HOLD(L)}$			0 0		ns ns

TABLE I. Electrical performance characteristics. - Continued

Test	Symbol	Conditions	Device type	Limits Min	Limits Max	Units
Maximum clock frequency	f_{MAX}	V_{CC} = 5 V, C_L = 50 pF, R_L = 1600Ω (figure 8)	03	6	---	MHz
Propagation delay time, low-to-high level, clock input to Q outputs	t_{PLH1}			11	55	ns
Propagation delay time, high-to-low level, clock input to Q outputs	t_{PHL1}			20	100	ns
Propagation delay, high-to-low level, $\overline{MR}$ to Q outputs	t_{PHL2}			30	125	ns
Width of clock pulse	t_{P1}			65	20	ns
Width of MR pulse with clock HIGH	t_{P2}			65	20	ns
Width of MR pulse with clock LOW	t_{P3}			75	20	ns
Shift Right frequency	f_{SR}	V_{CC} = 5 V, C_L = 50 pF, R_L = 1600Ω (figure 9)	04	5	25	MHz
Propagation delay, low-to-high, clock to output	t_{PLH1}			14	100	ns
Propagation delay, high-to-low, clock to output	t_{PHL1}			20	100	ns
Propagation delay, high-to-low, $\overline{MR}$ to output (except $\overline{Q3}$	t_{PHL2}			20	100	ns
Propagation delay, high-to-low, $\overline{MR}$ to $\overline{Q3}$	t_{PHL3}			25	120	ns
Clock pulse width	t_{P1}			20	55	ns
Master reset pulse width	t_{P2}			20	75	ns
Setup time, data to clock	t_{SETUP1}			25	60	ns
Setup time, $\overline{PE}$ to clock	t_{SETUP2}			25	70	ns
Hold time, data to clock	t_{HOLD1}			-40	0	ns
Hold time, $\overline{PE}$ to clock	t_{HOLD2}			-65	-20	ns
Recovery time, $\overline{MR}$ to clock	t_{REC}			20	60	ns
Maximum clock frequency	f_{MAX}	V_{CC} = 5 V, C_L = 50 pF, R_L = 800Ω (figure 10)	05	3	---	MHz
Propagation delay time, high-to-low level, clear input to Q outputs	t_{PHL1}				140	ns
Propagation delay time, high-to-low level, clock input to Q outputs	t_{PHL2}				120	ns
Propagation delay time, low-to-high level, clock input to Q outputs	t_{PLH2}				120	ns
Width of clock or clear pulse	t_p			40	---	ns
Data setup time	$t_{SETUP(H)}$			---	60	ns
	$t_{SETUP(L)}$			---	60	ns
Data hold time	$t_{HOLD(H)}$			-10	---	ns
	$t_{HOLD(L)}$			-10	---	ns

1/ Not more than one output should be shorted at a time.
2/ I_{CC} is measured in accordance with Table III requirements.

(b) Temperature cycling (method 1010 of MIL-STD-883).
  (1) Omit seal test as post-test measurements.
(c) Thermal shock (method 1011 of MIL-STD-883), when substituted for temperature cycling.
  (1) Omit seal test as post-test measurements.
(d) Burn-in test (method 1015 of MIL-STD-883).
  (1) Test condition D or E, using the circuit shown on figure , or equivalent.
  (2) T_A = 125°C minimum.
(e) Reverse bias burn-in and interim electrical test in accordance with 3.1.10 of method 5004 of MIL-STD-883 may be omitted.
(f) Interim and final electrical test parameters shall be as specified in table II, except interim electrical parameters test prior to burn-in is optional at the discretion of the manufacturer.
(g) External visual inspection shall not include measurement of case and lead dimensions.
(h) Percent defective allowable (PDA) - The PDA is specified as 5 percent for class A devices and 10 percent for class B devices based on failures from group A, subgroup 1 test after cooldown as final electrical test in accordance with method 5004 of MIL-STD-883, and with no intervening electrical measurements. If interim electrical parameter tests are performed prior to burn-in, failures resulting from pre burn-in screening may be excluded from the PDA. If interim electrical parameter tests prior to burn-in are omitted, then all screening failures shall be included in the PDA. The verified failures of group A, subgroup 1 after burn-in divided by the total number of devices submitted for burn-in in that lot shall be used to determine the percent defective for that lot, and the lot shall be accepted or rejected based on the PDA for the applicable device class.

TABLE II. Electrical test requirements.

MIL-STD-883 test requirements	Subgroups (see table III)		
	Class A devices	Class B devices	Class C devices
Interim electrical parameters (pre burn-in) (method 5004)	1	1	None
Final electrical test parameters (method 5004)	1*, 2, 3, 7, 8, 9, 10, 11	1*, 2, 3, 7, 9	1, 7
Group A test requirements (method 5005)	1, 2, 3, 7, 8, 9, 10, 11	1, 2, 3, 7, 9	1, 2, 3, 9
Group C end point electrical parameters (method 5005)	1, 2, 3	1, 2, 3	1
Additional electrical subgroups for group C periodic inspections	None	10, 11	10, 11

*PDA applies to subgroup 1 (see 4.3(h)).

4.4 Quality conformance inspection. Quality conformance inspection shall be in accordance with MIL-M-38510.

4.4.1 Group A inspection. Group A inspection shall consist of the test subgroups and LTPD values shown in table I of method 5005 of MIL-STD-883 and as follows:

(a) Tests shall be as specified in table II.
(b) Subgroups 4, 5, and 6 of table I of method 5005 shall be omitted.

4.4.2 Group B inspection. Group B inspection shall consist of the test subgroups and LTPD values shown in table II of method 5005 of MIL-STD-883 and as follows:

(a) Bond strength test may be conducted on samples collected prior to sealing (see 4.3(a)).

4.4.3 Group C inspection. Group C inspection shall consist of the test subgroups and LTPD values shown in table III of method 5005 of MIL-STD-883 and as follows:

(a) End point electrical parameters shall be as specified in table II.
(b) Lead bend in only one direction is required for initial conditioning prior to moisture resistance and salt atmosphere tests.
(c) High temperature storage test (method 1008 of MIL-STD-883) conditions:
  (1) Temperature: 150° ±10°C.
  (2) Duration: 1,000 hours, except as otherwise permitted by appendix B of MIL-M-38510.
(d) Operating life test (method 1005 of MIL-STD-883) conditions:
  (1) Test condition D or E, using the circuit shown on figure , or equivalent.
  (2) T_A = 125°C, minimum.
  (3) Test duration: 1,000 hours, except as permitted by appendix B of MIL-M-38510.
(e) Omit steady-state reverse bias test.
(f) Subgroups 7 and 8 shall be added to the group C inspection requirements for class B and C devices and shall consist of the tests, conditions, and limits specified for subgroups 10 and 11 of group A.

4.5 Methods of examination and test. Methods of examination and test shall be as specified in the appropriate tables and as follows.

4.5.1 Voltage and current. All voltages given are referenced to the microcircuit ground terminal. Currents given are conventional current and positive when flowing into the referenced terminal.

4.5.2 Life-test cooldown procedure. When devices are measured at 25°C following application of the operating life or burn-in test condition, they shall be cooled to room temperature prior to removal of the bias. Alternately, the bias may be removed during cooling if the case temperature is reduced to room temperature within 30 minutes after removal of the test condition.

4.6 Inspection of preparation for delivery. Inspection of preparation for delivery shall be in accordance with MIL-M-38510, except that the rough handling test shall not apply.

5. PREPARATION FOR DELIVERY

5.1 Preservation-packaging and packing. Microcircuits shall be prepared for delivery in accordance with MIL-M-38510.

6. NOTES

6.1 Notes. The notes specified in MIL-M-38510 are applicable to this specification.

6.2 Intended use. Microcircuits conforming to this specification are intended for use for Government microcircuit applications (original equipment) and logistic purposes.

6.3 Ordering data. The contract or order should specify the following:

(a) Complete part number (see 1.2).
(b) Requirements for delivery of one copy of the quality conformance inspection data pertinent to the device inspection lot to be supplied with each shipment by the device manufacturer, if applicable.

Device type 01

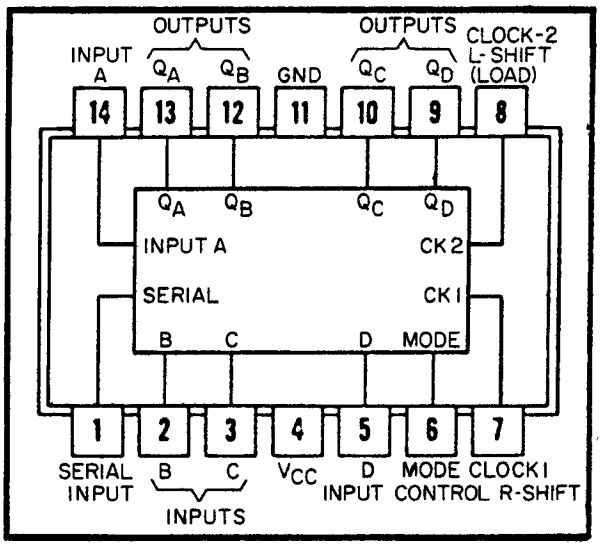

Cases A, B, C, D

Device types 02, 05

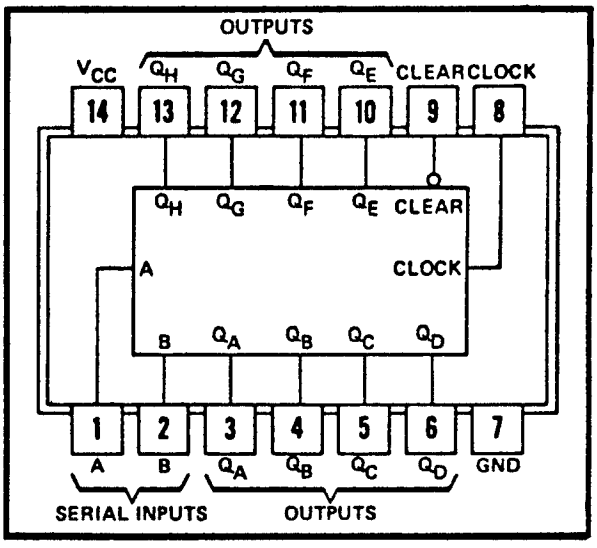

Cases A, B, C, D

FIGURE 1. Terminal connections.

Device type 03

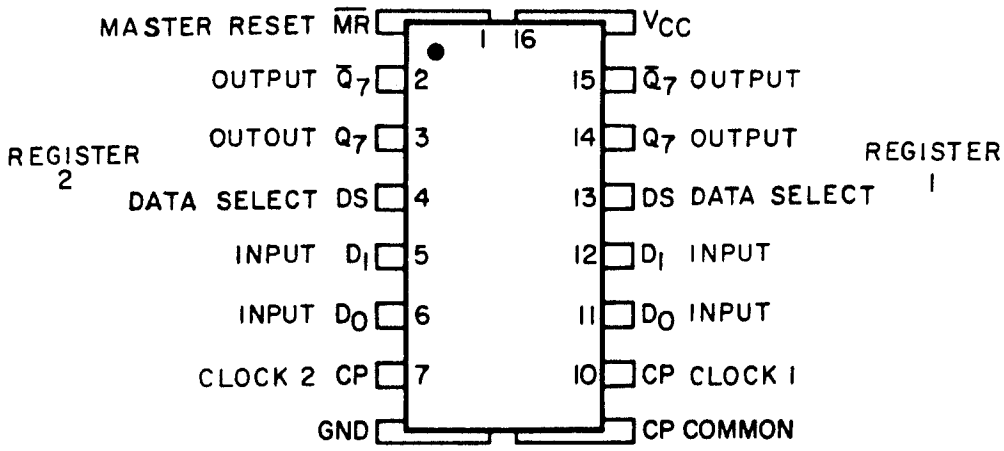

Cases E, F

Device type 04

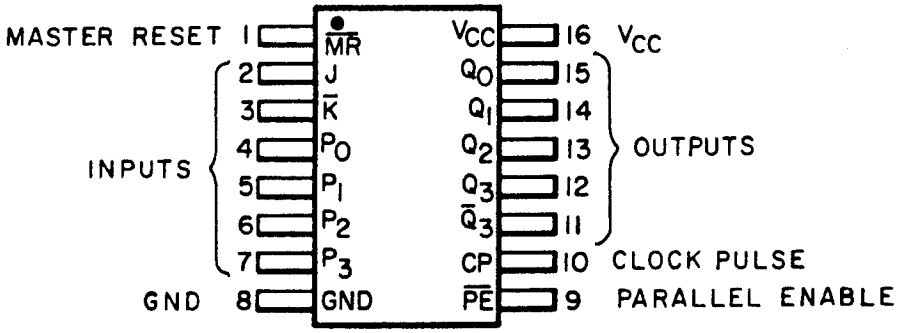

Cases E, F

FIGURE 1. Terminal connections - Continued.

Device type 01

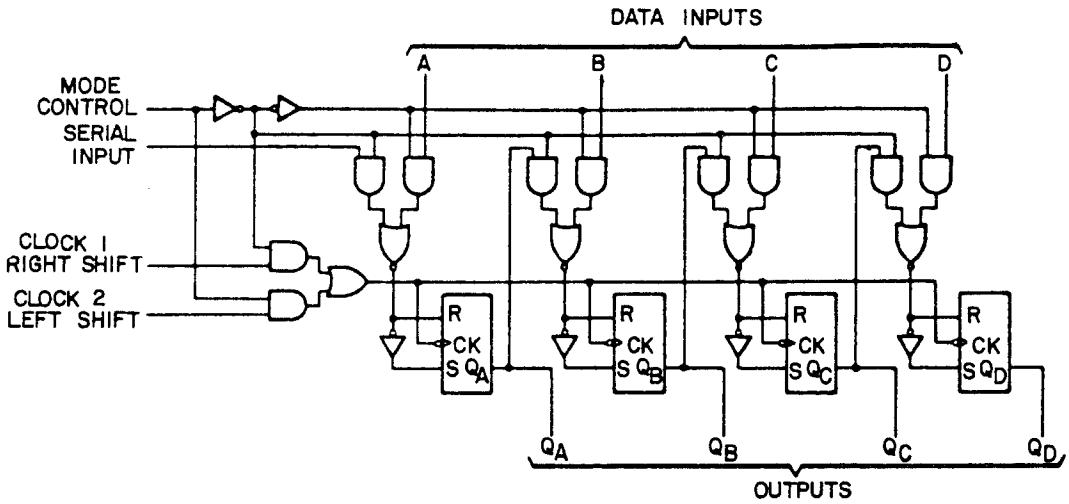

Device types 02, 05

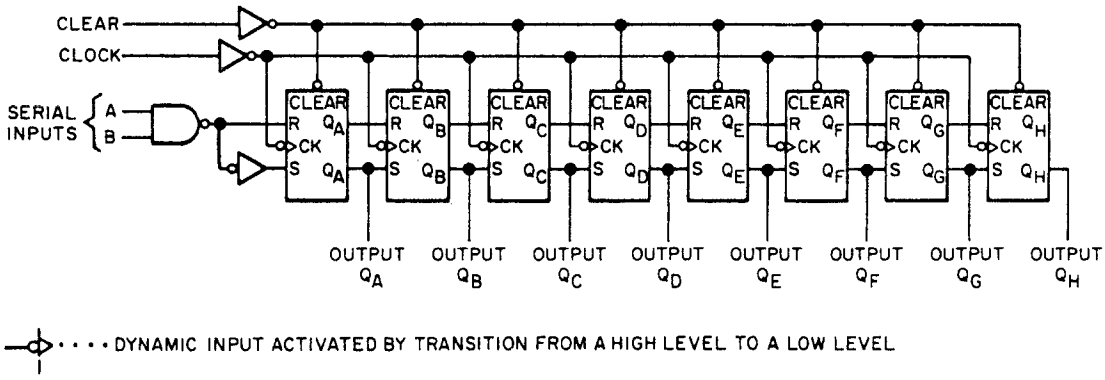

FIGURE 2. Logic diagram.

Device type 03

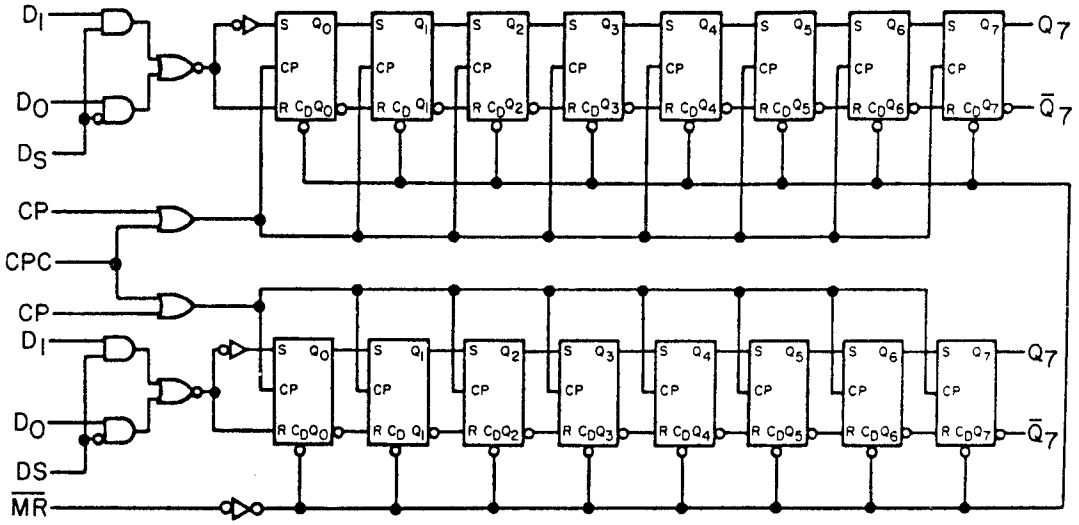

Device type 04

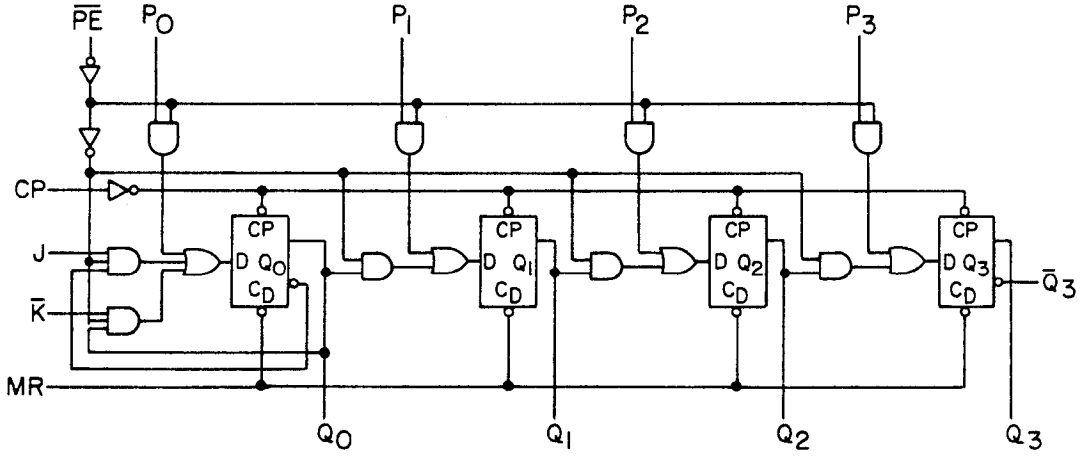

FIGURE 2. Logic diagram - Continued.

Device type 01

INPUTS								OUTPUTS			
MODE CONTROL	CLOCKS 2(L)	CLOCKS 1(R)	SERIAL	PARALLEL A	PARALLEL B	PARALLEL C	PARALLEL D	Q_A	Q_B	Q_C	Q_D
H	H	X	X	X	X	X	X	Q_{AO}	Q_{BO}	Q_{CO}	Q_{DO}
H	↓	X	X	a	b	c	d	a	b	c	d
H	↓	X	X	Q_B↑	Q_C↑	Q_D↑	d	Q_{Bn}	Q_{Cn}	Q_{Dn}	d
L	L	H	X	X	X	X	X	Q_{AO}	Q_{BO}	Q_{CO}	Q_{DO}
L	X	↓	H	X	X	X	X	H	Q_{An}	Q_{Bn}	Q_{Cn}
L	X	↓	L	X	X	X	X	L	Q_{An}	Q_{Bn}	Q_{Cn}
↑	L	L	X	X	X	X	X	Q_{AO}	Q_{BO}	Q_{CO}	Q_{DO}
↓	L	L	X	X	X	X	X	Q_{AO}	Q_{BO}	Q_{CO}	Q_{DO}
↓	L	H	X	X	X	X	X	Q_{AO}	Q_{BO}	Q_{CO}	Q_{DO}
↑	H	L	X	X	X	X	X	Q_{AO}	Q_{BO}	Q_{CO}	Q_{DO}
↑	H	H	X	X	X	X	X	Q_{AO}	Q_{BO}	Q_{CO}	Q_{DO}

Shifting left requires external connection of Q_B to A, Q_C to B, and Q_D to C. Serial data is entered at input D.

H = high level (steady state), L = low level (steady state), X = irrelevant (any input, including transitions)

↓ = transition from high to low level, ↑ = transition from low to high level.

a, b, c, d = the level of steady state input at inputs A, B, C, or D, respectively.

Q_{AO}, Q_{BO}, Q_{CO}, Q_{DO} = the level of Q_A, Q_B, Q_C, or Q_D, respectively, before the indicated steady state input conditions were established.

Q_{An}, Q_{Bn}, Q_{Cn}, Q_{Dn} = the level of Q_A, Q_B, Q_C, or Q_D, respectively, before the most recent transition of the clock.

FIGURE 3. Truth tables and timing diagrams.

Device types 02 and 05

INPUTS				OUTPUTS			
CLEAR	CLOCK	A	B	Q_A	Q_B	...	Q_H
L	X	X	X	L	L		L
H	L	X	X	Q_{AO}	Q_{BO}		Q_{HO}
H	↑	H	H	H	Q_{An}		Q_{Gn}
H	↑	L	X	L	Q_{An}		Q_{Gn}
H	↑	X	L	L	Q_{An}		Q_{Gn}

H = high level (steady state), L = low level (steady state)
X = irrelevant (any input, including transitions)
↑ = transition from low to high level.
Q_{AO}, Q_{BO}, Q_{HO} = the level of Q_A, Q_B, or Q_H, respectively, before the indicated steady state input conditions were established.
Q_{An}, Q_{Gn} = the level of Q_A or Q_G before the most recent transition of the clock; indicates a one bit shift.

typical clear, shift, and clear sequences

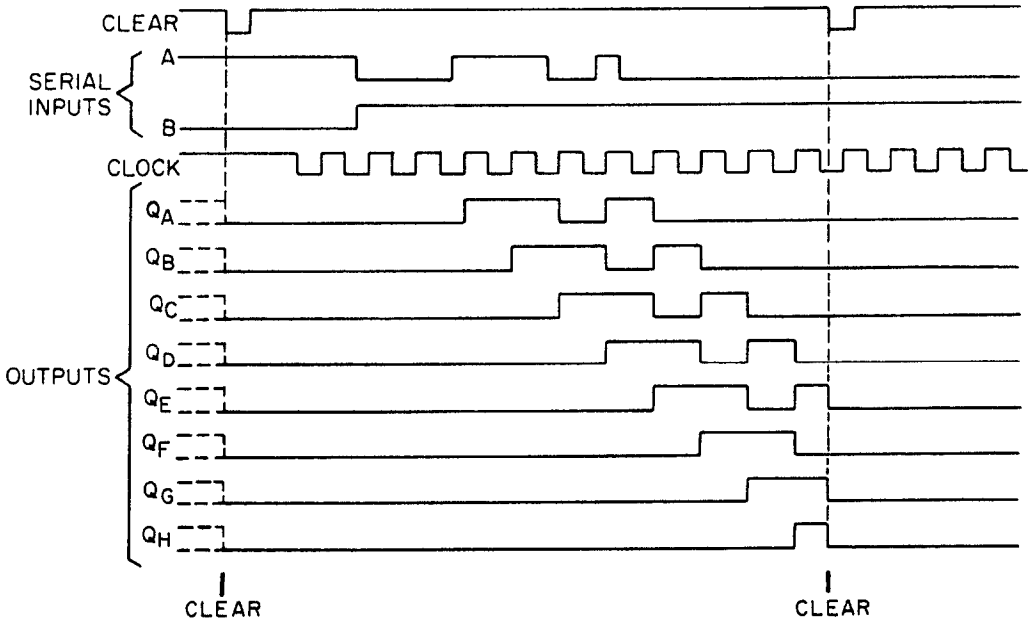

FIGURE 3. Truth tables and timing diagrams - Continued.

Device type 03

Shift selection			Output
D_S	D_O	D_1	$Q_7(t_{n+8})$
L	L	X	L
L	H	X	H
H	X	L	L
H	X	H	H

N+8 = Indicates state after eight clock pulse
L = Low voltage level
H = High voltage level
X = Either high or low voltage level

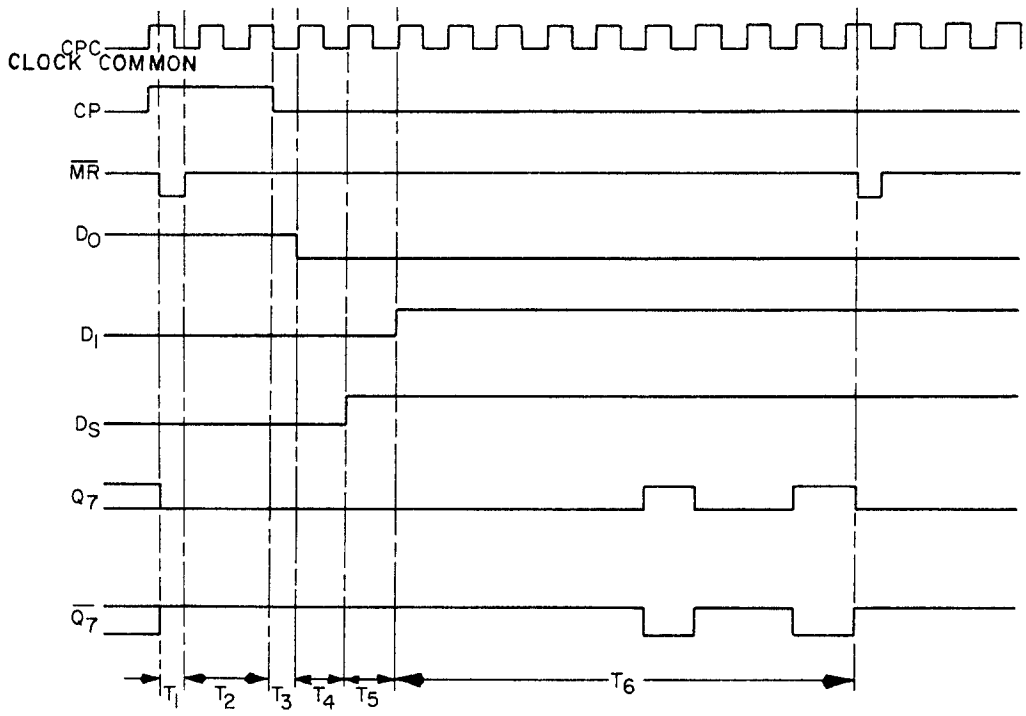

KEY TO SEQUENCE: -

T_1 = Clear ($\overline{MR}$ LOW)
T_2 = Inhibit (CP HIGH)
T_3 = Load logic 'H' via D_O (D_O HIGH, D_S LOW)
T_4 = Load logic 'L' via D_O (D_O LOW, D_S LOW)
T_5 = Load logic 'L' via D_1 (D_1 LOW, D_S HIGH)
T_6 = Load logic 'H' via D_1 (D_1 HIGH, D_S HIGH)

Typical clear-inhibit-load-clear sequence.

FIGURE 3. Truth tables and timing diagrams - Continued.

Device type 04

3a. SERIAL ENTRY

($\overline{PE}$ = HIGH, $\overline{MR}$ = HIGH)

J	$\overline{K}$	Q_O at t_{n+1}
L	L	L
L	H	Q_O at t_n (no change)
H	L	Q_O at t_n (toggles)
H	H	H

3b. SERIAL ENTRY

($\overline{PE}$ = HIGH, $\overline{MR}$ = HIGH)

J & $\overline{K}$ Connected	Q_O at t_{n+1}
L	L
H	H

3c. PARALLEL ENTRY

($\overline{PE}$ = LOW, $\overline{MR}$ = HIGH)

D-Input (P_O, P_1, P_2 or P_3)	Output Q at t_{n+1} (Q_O, Q_1, Q_2 or Q_3)
L	L
H	H

(n+1 = indicates state after next clock)

3d. MODE SELECTION

	$\overline{PE}$	P_O	P_1	P_2	P_3	J	$\overline{K}$	$\overline{MR}$
Serial Entry	H	X	X	X	X	Refer to Table 3a & 3b		H
Parallel Entry	L	Refer to Table 3c				X	X	H

H = HIGH voltage level
L = LOW voltage level
X = Don't care

FIGURE 3. Truth tables and timing diagrams - Continued.

Device type 01

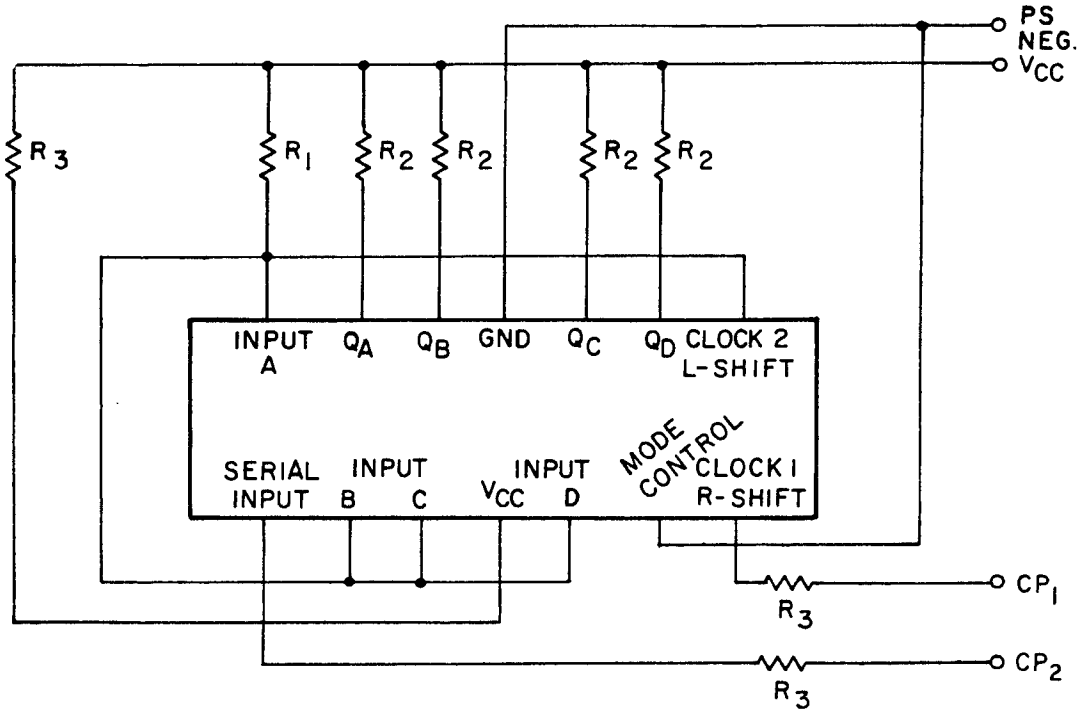

NOTES:
1. V_{CC} shall be of such a value as to provide 5 V min. at device terminals.
2. R_1 = 100Ω ±5%, 1/2 W.
3. R_2 = 2.4 kΩ ±5%, 1/2 W.
4. R_3 = 27 Ω ±5%, 1/2 W.
5. CP_1 = 100 kHz, 50% duty cycle, 0-3 V ampl.
6. CP_2 = 50 kHz, 50% duty cycle, 0-3 V ampl.
7. CP_2 voltage transitions shall occur at lease 5 ns after CP_1 transitions.

FIGURE 4. Burn-in and life-test circuits.

Device type 02

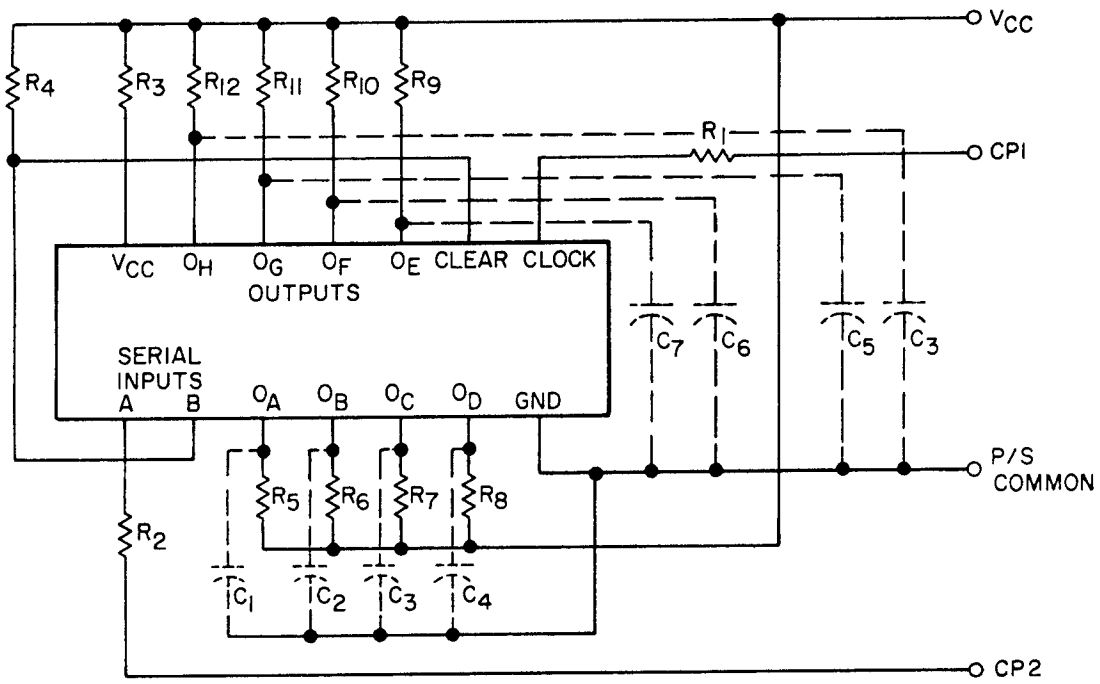

NOTES:

V_{CC} = +5 V
R_1, R_2 = 120Ω.
R_3 = 4.99Ω.
R_4 = 1 kΩ.
$R_5 \rightarrow R_{12}$ = 1.2 kΩ.
$C_1 \rightarrow C_8$ = wiring capacitance.
CP_1 = 100 kHz, 50% duty cycle, square wave 0-3 V.
CP_2 = 50 kHz, 50% duty cycle, square wave 0-3 V.

FIGURE 4. Burn-in and life test circuits - Continued.

Device type 03

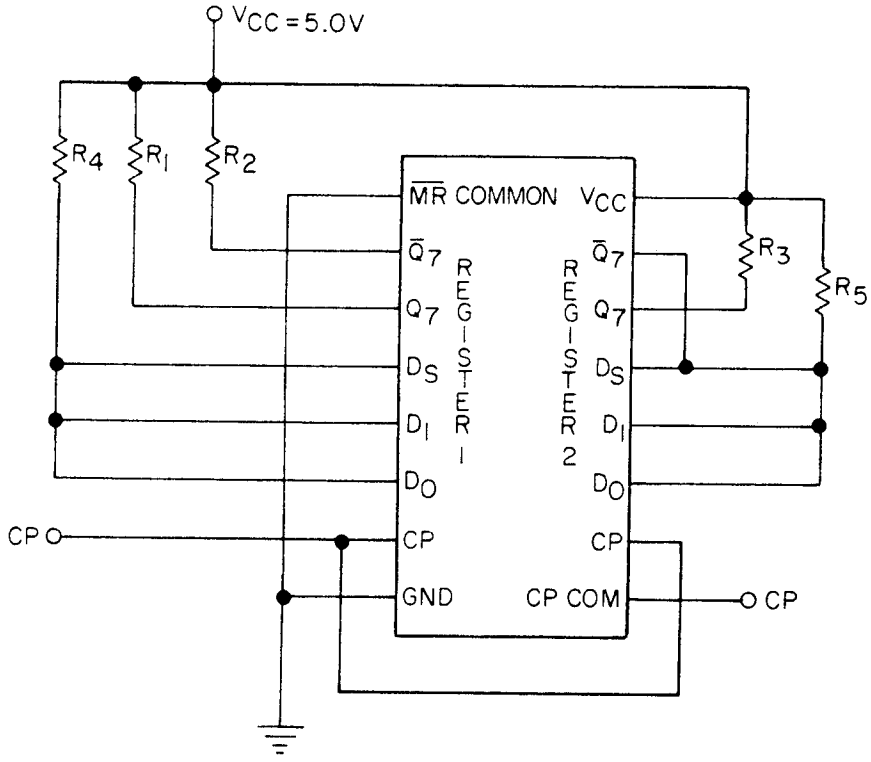

NOTES:
1. $R_1 = R_2 = R_3 = 510\Omega$.
2. $R_4 = R_5 = 1\ k\Omega$.
3. CP = 100 kHz, V_{IN} = square wave 0-3 V, 50% duty cycle.

FIGURE 4. Burn-in and life test circuits - Continued.

Device type 04

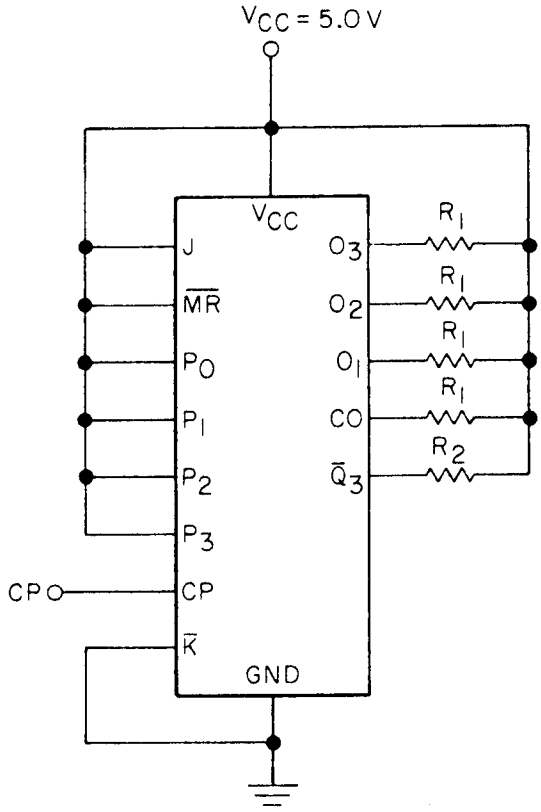

NOTES:
1. CP = 0-3 V
   Frequency = 1 MHz
   50% duty cycle, min.
2. R_1 = 470Ω.
3. R_2 = 330Ω.

FIGURE 4. Burn-in and life test circuits - Continued.

Device type 05

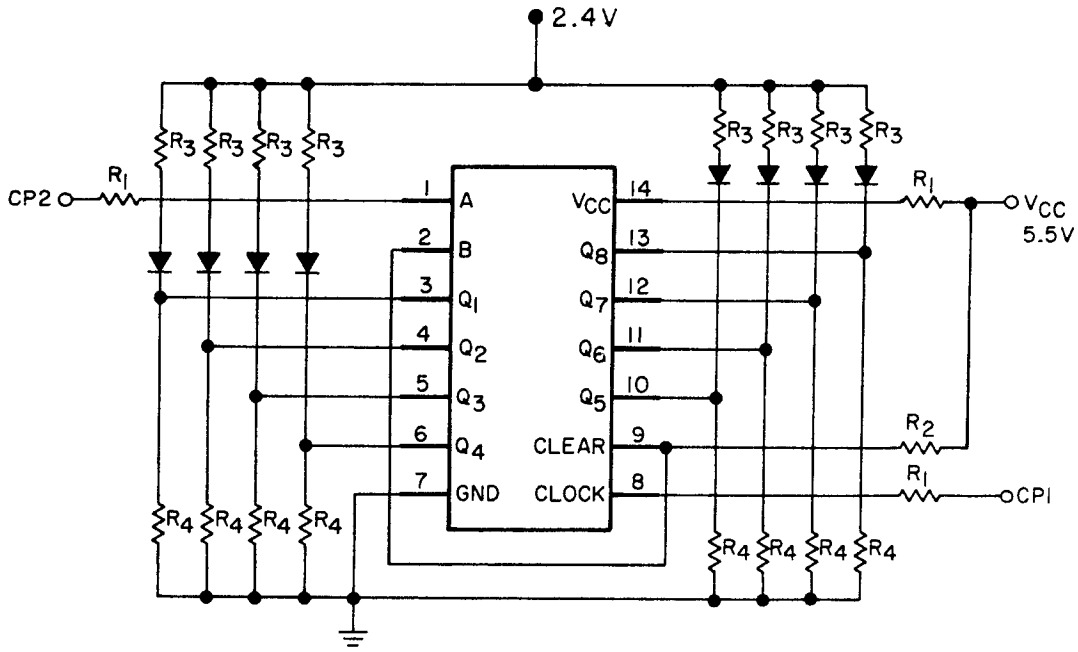

NOTES:
1. R_1 = 51 Ω; R_2 = 1 kΩ; R_3 = 680 Ω; R_4 = 12 kΩ.
2. CP_1 = 100 kHz, 50% duty cycle, 3 V.
3. CP_2 = 50 kHz, 50% duty cycle, 3 V.
4. Diodes are 1N3064 or equivalent.

FIGURE 4. Burn-in and life test circuits - Continued.

Device type 01

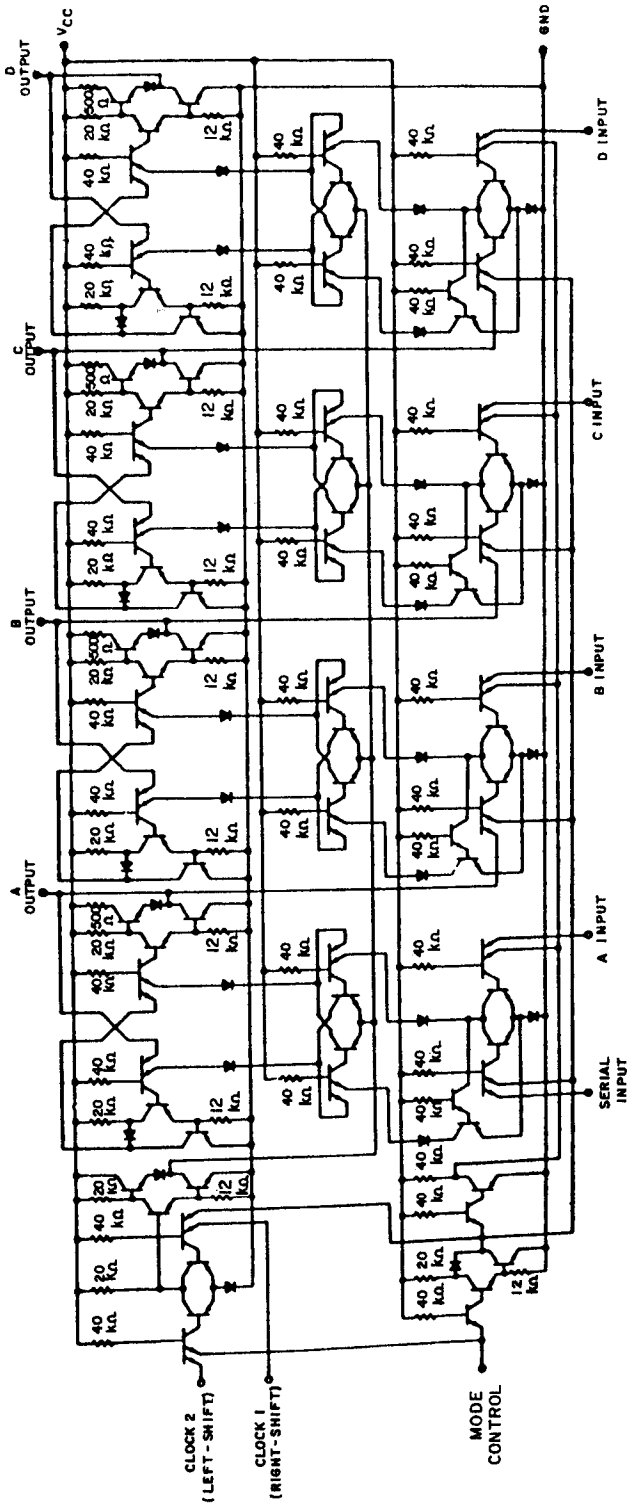

Circuit A

NOTE: Component values shown are nominal.

FIGURE 5. Schematic circuit.

Device type 01

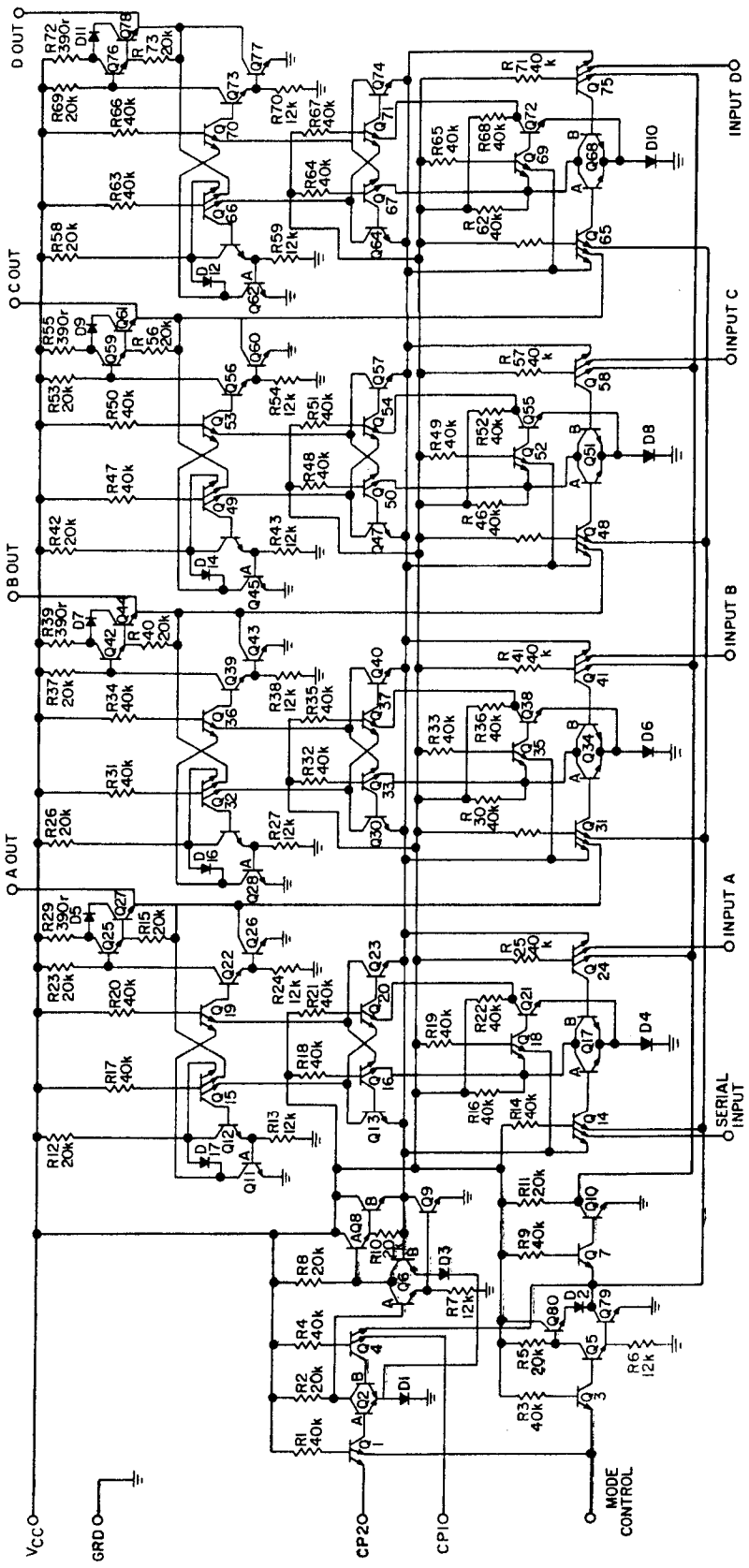

Circuit B

NOTE: Component values shown are nominal.

FIGURE 5. Schematic circuit - Continued.

Device Type 02

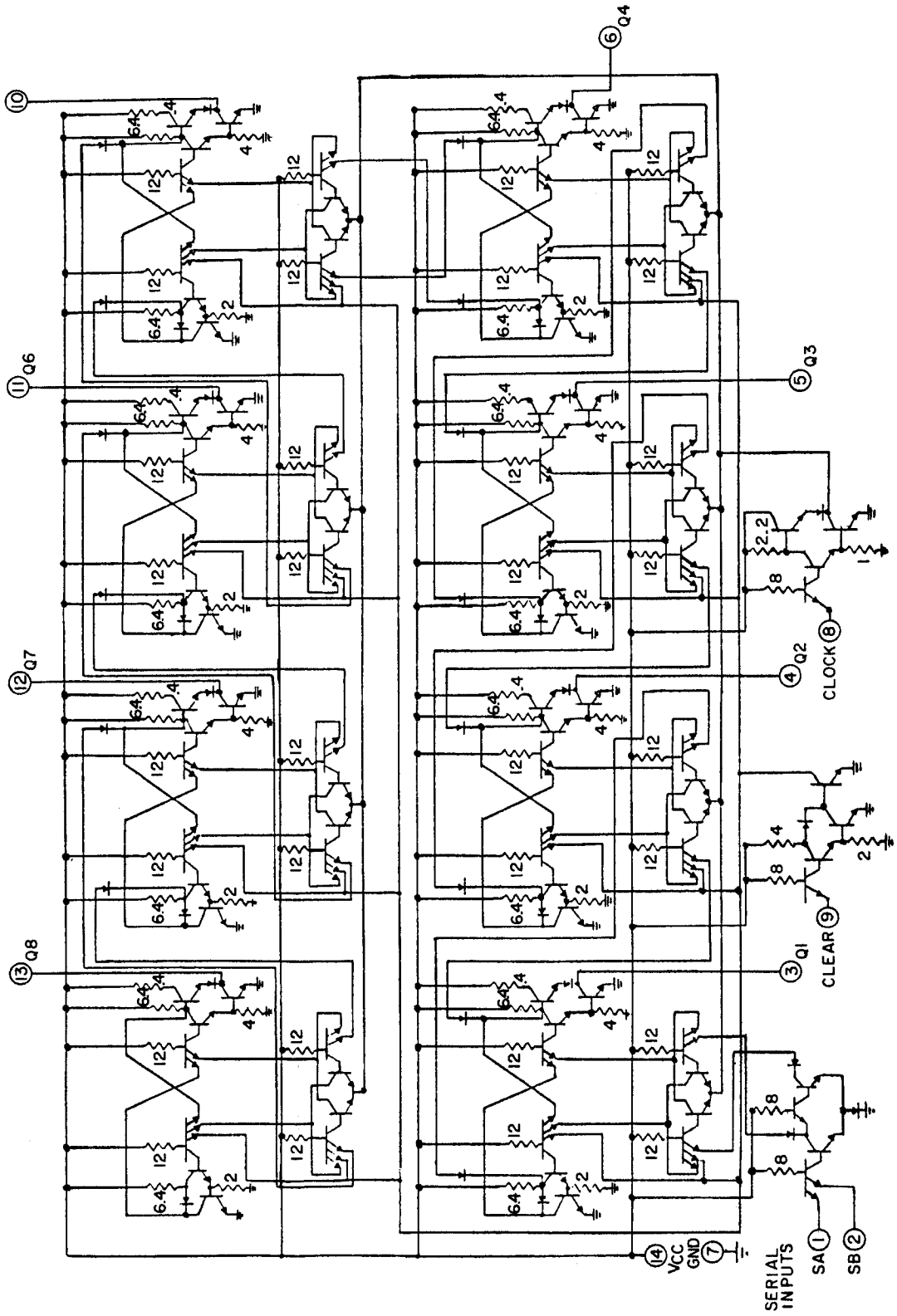

FIGURE 5. Schematic circuit - Continued.

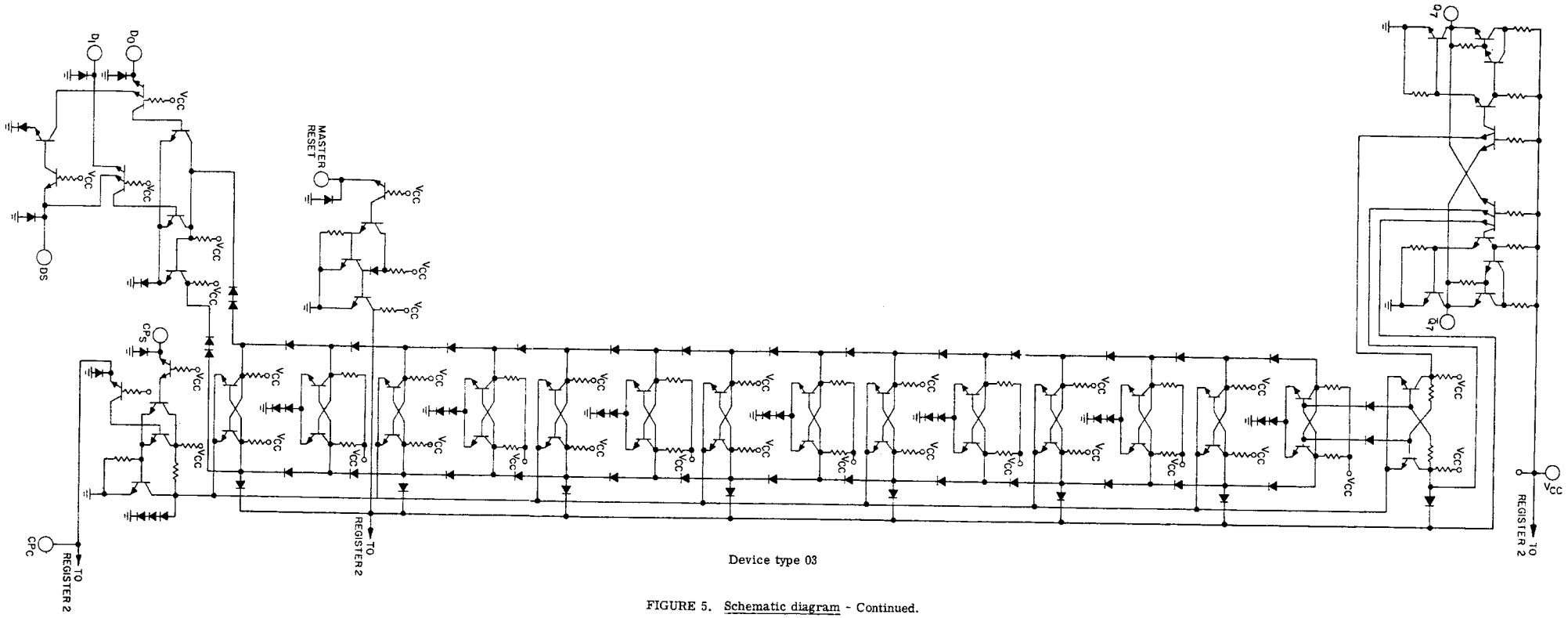

Device type 03

FIGURE 5. Schematic diagram - Continued.

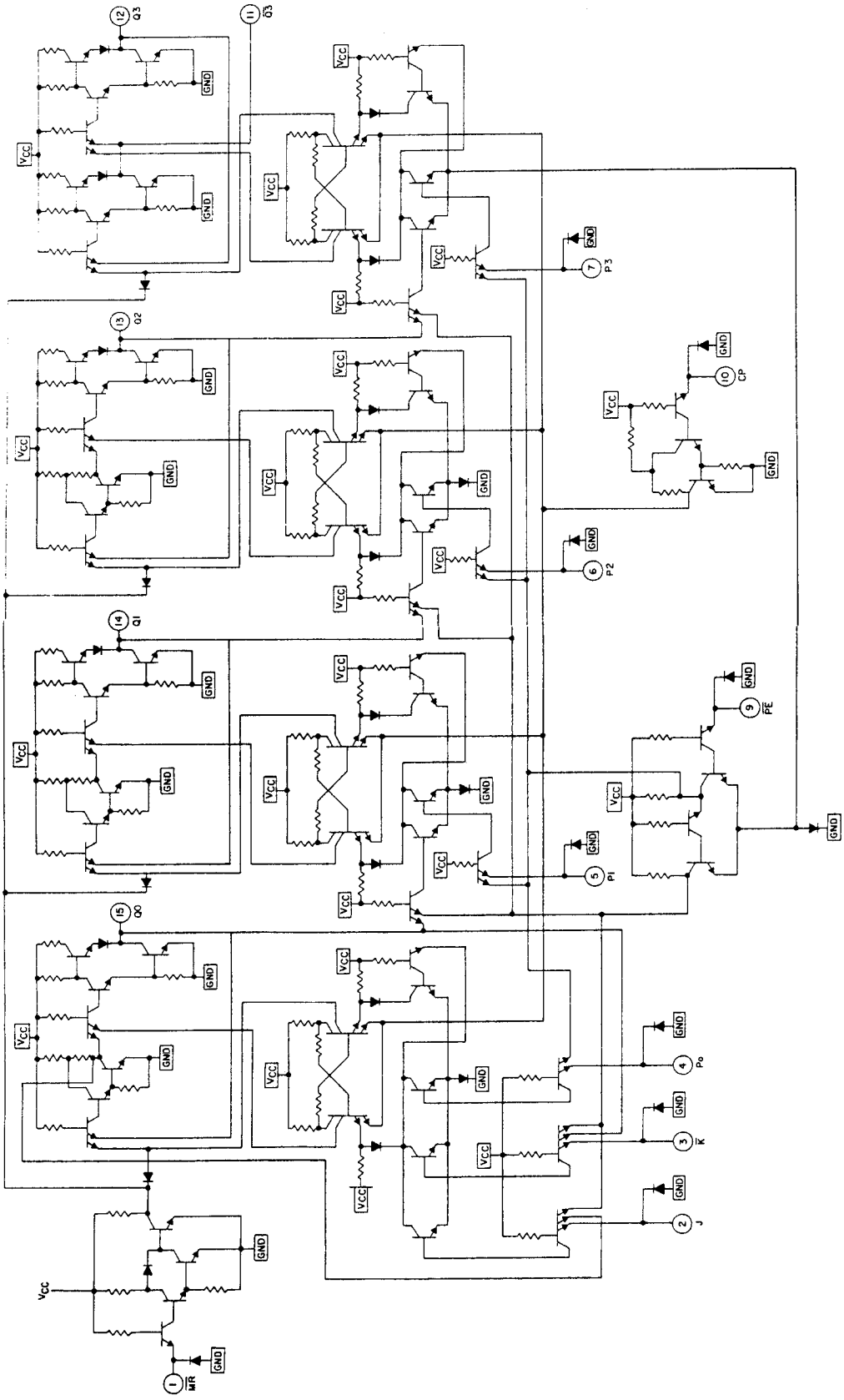

Device type 04

FIGURE 5. Schematic diagram - Continued.

Device type 05

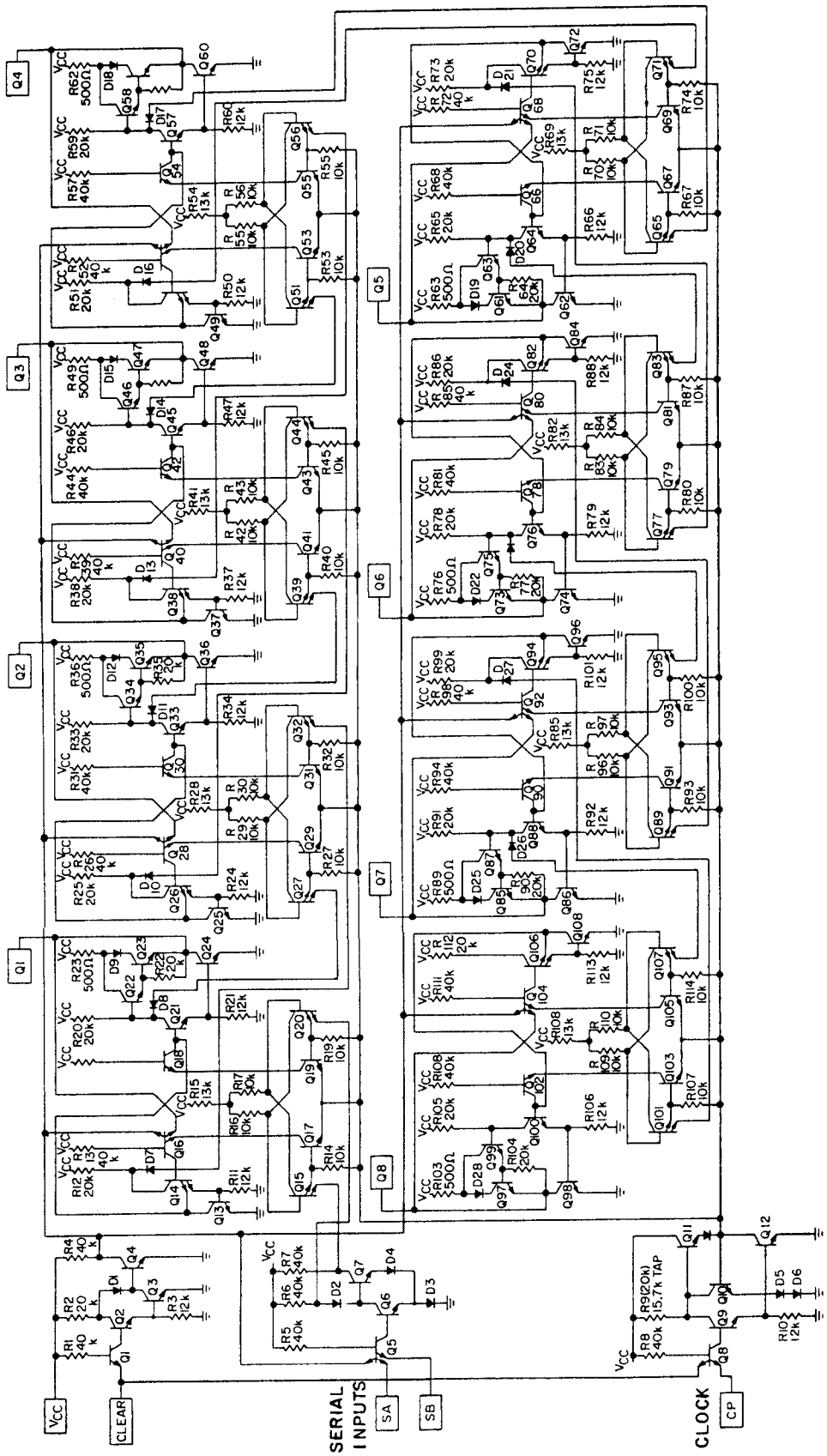

FIGURE 5. Schematic circuit - Continued.

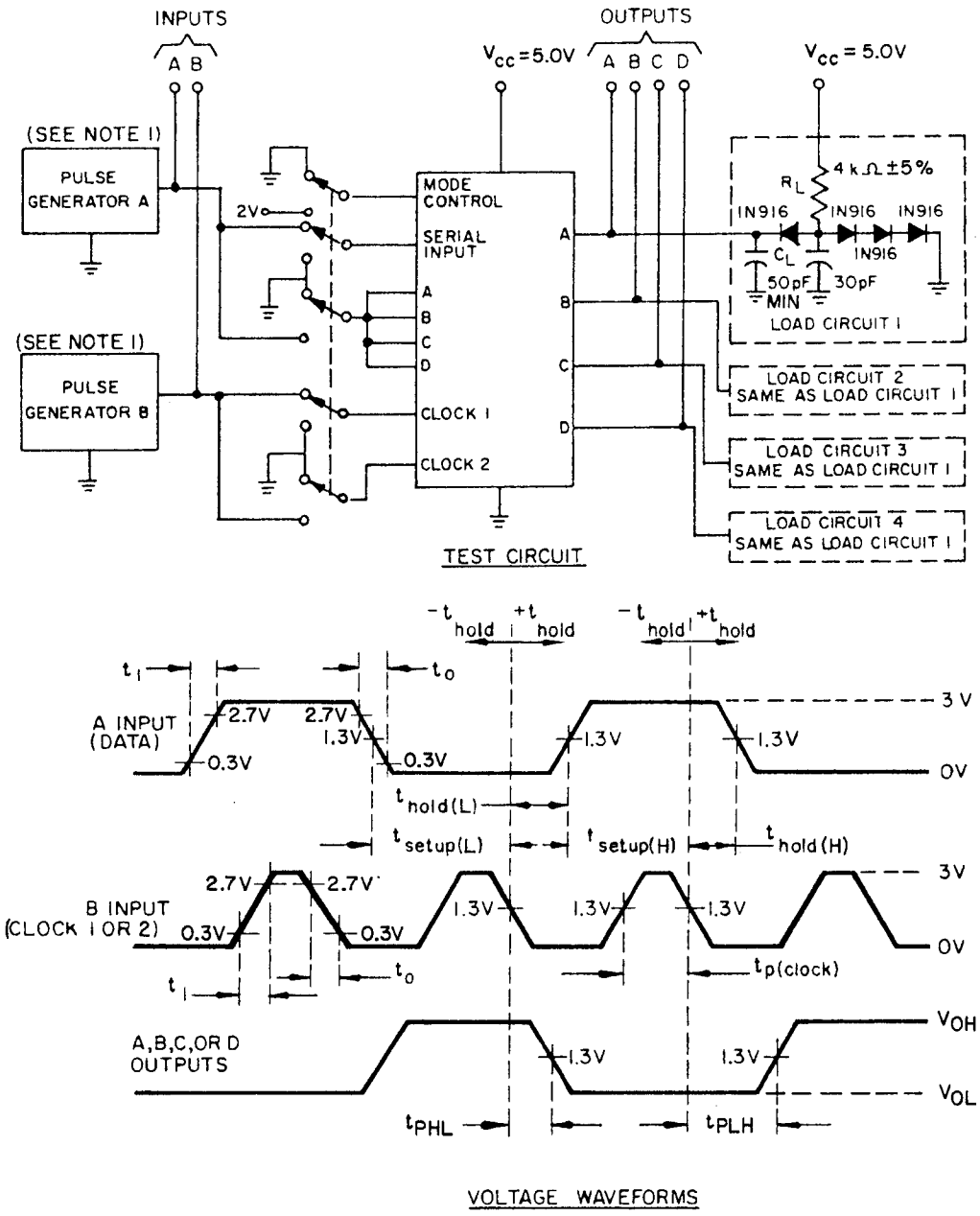

VOLTAGE WAVEFORMS

NOTES:

1. The pulse generators have the following characteristics: $t_1 \leq 15$ ns, $t_0 \leq 10$ ns, and $Z_{out} \approx 50\Omega$. For pulse generator A: $t_p > 150$ ns and PRR < 500 kHz. For pulse generator B: $t_p > 10$ ns and PRR < 1 MHz. When testing f_{max}, vary PRR.
2. Voltage values are with respect to network ground terminal.
3. C_L includes probe and jig capacitance.

FIGURE 6. Switching test circuits, waveforms, and mode control setup times for device type 01.

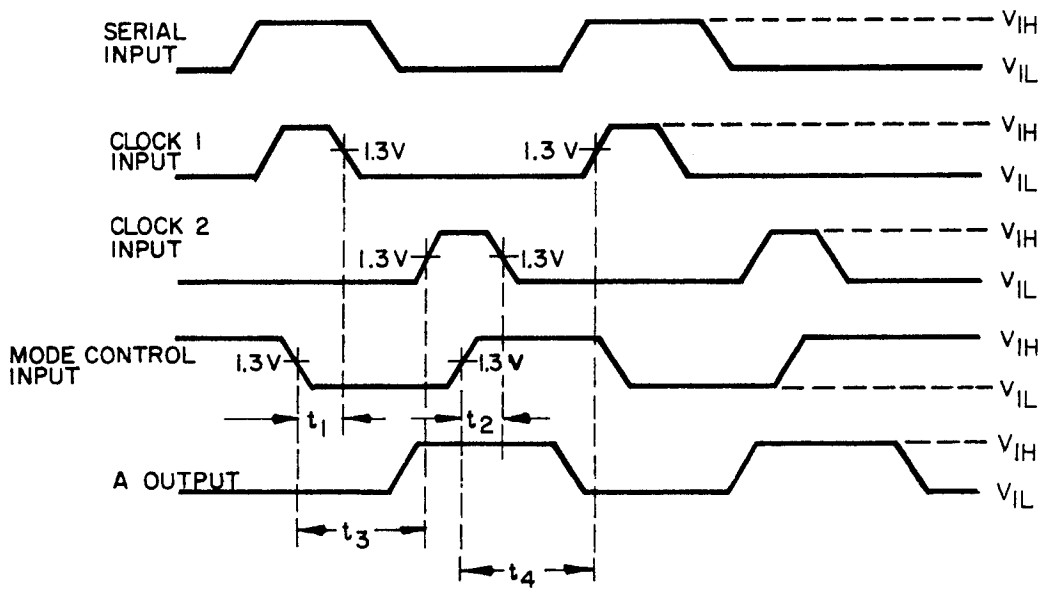

VOLTAGE WAVEFORMS

NOTE: A input is at V_{IL}.

FIGURE 6. Switching test circuits, waveforms, and mode control setup times for device type 01 - Continued.

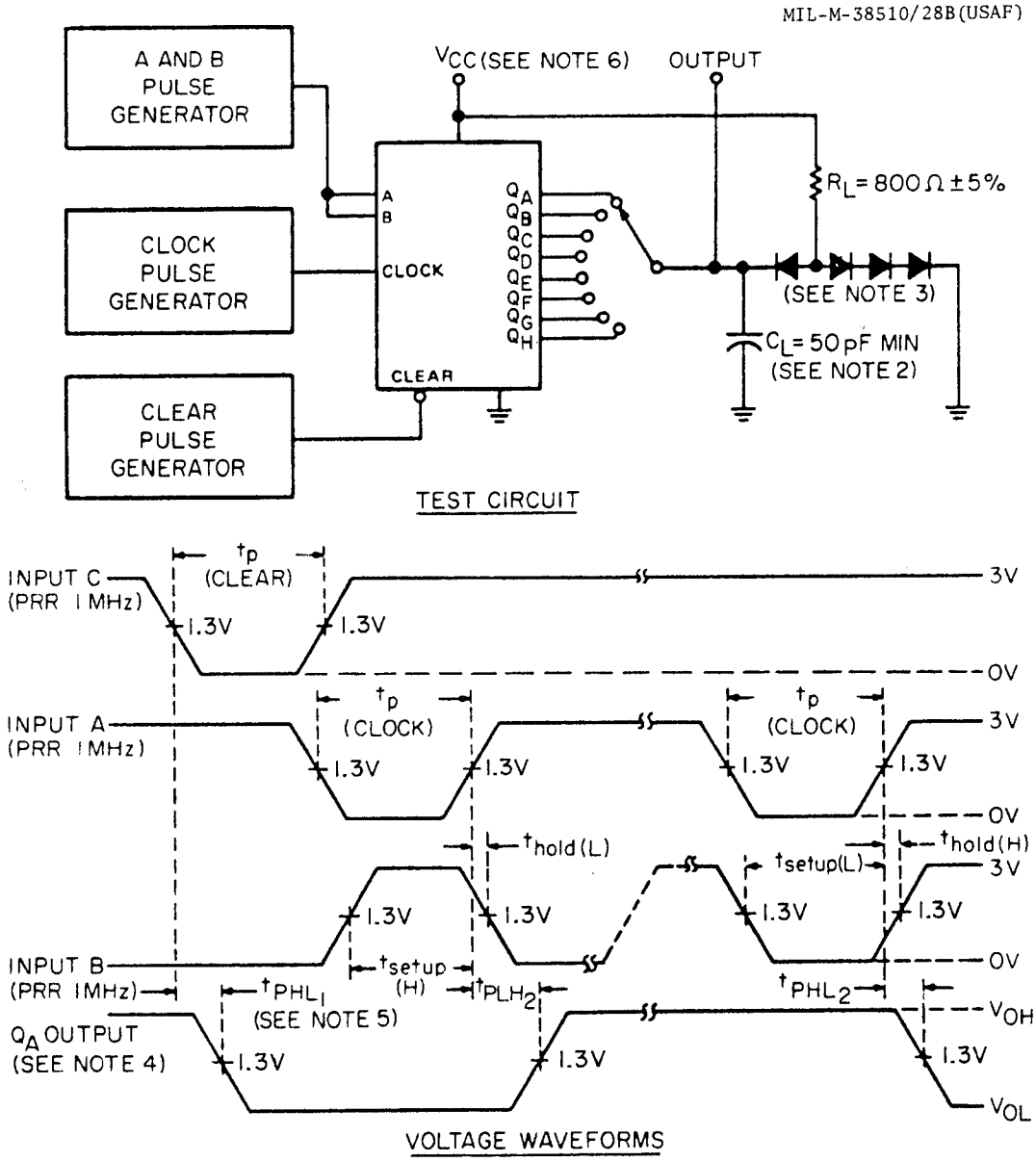

NOTES:

1. The pulse generators have the following characteristics: $t_r < 10$ ns, $t_f < 10$ ns, duty cycle $< 50\%$, $Z_{out} \approx 50\,\Omega$.
2. C_L includes probe and jig capacitance.
3. All diodes are 1N916 or equivalent.
4. Q_A output is illustrated. Relationship of serial input A and B data to other Q outputs is illustrated in the typical shift sequence.
5. Outputs are set to the high level prior to the measurement of t_{PHL} from the clear input.
6. V_{CC} shall be of sufficient amplitude to provide 5 V at device terminal.

FIGURE 7. Switching test circuits and waveforms for device type 02.

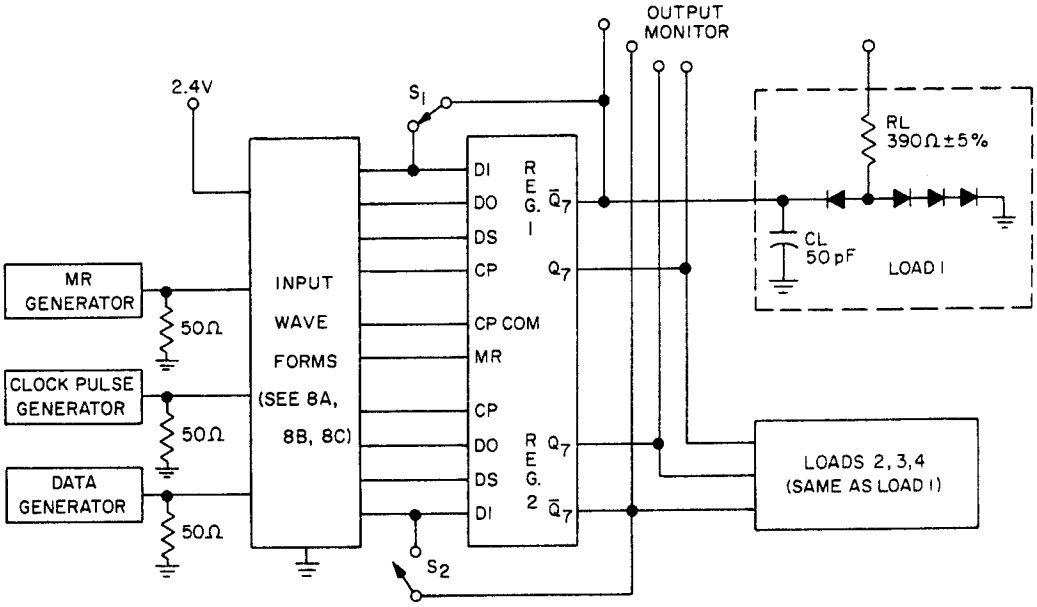

NOTES:
1. C_L includes probe and jig capacitance.
2. All diodes are 1N3064 or equivalent.

FIGURE 8. Switching test circuit and waveforms for device type 03.

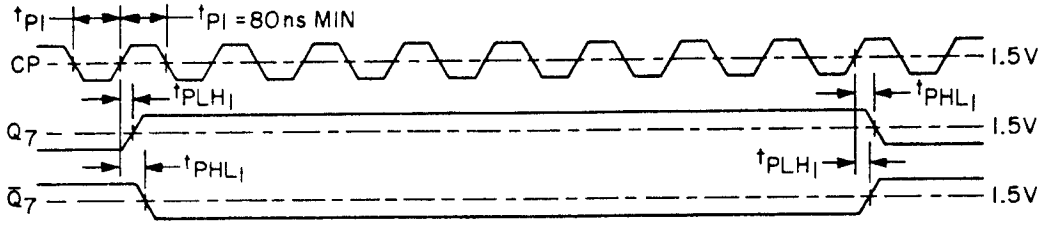

FIGURE 8a. Propagation delay, clock to output.

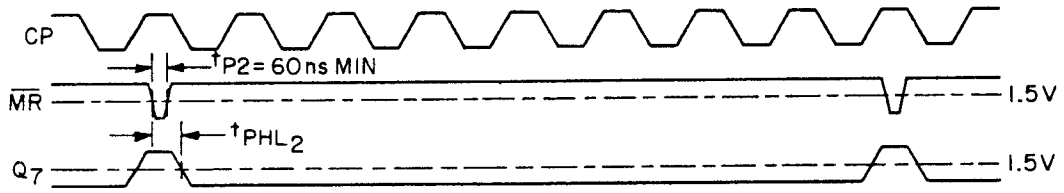

FIGURE 8b. Propagation delay, MR to output with clock high.

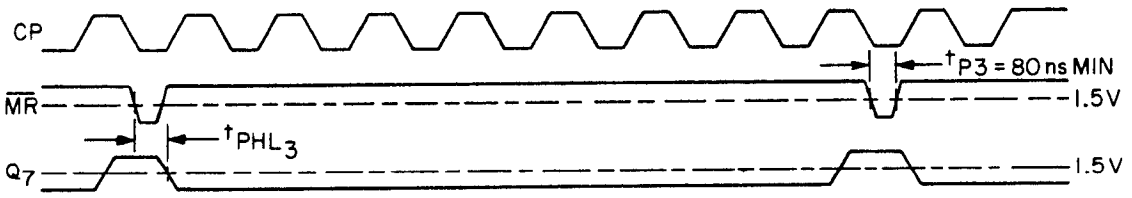

FIGURE 8c. Propagation delay, MR to output with clock low.

FIGURE 8. Switching test circuit and waveforms for device type 03 - Continued.

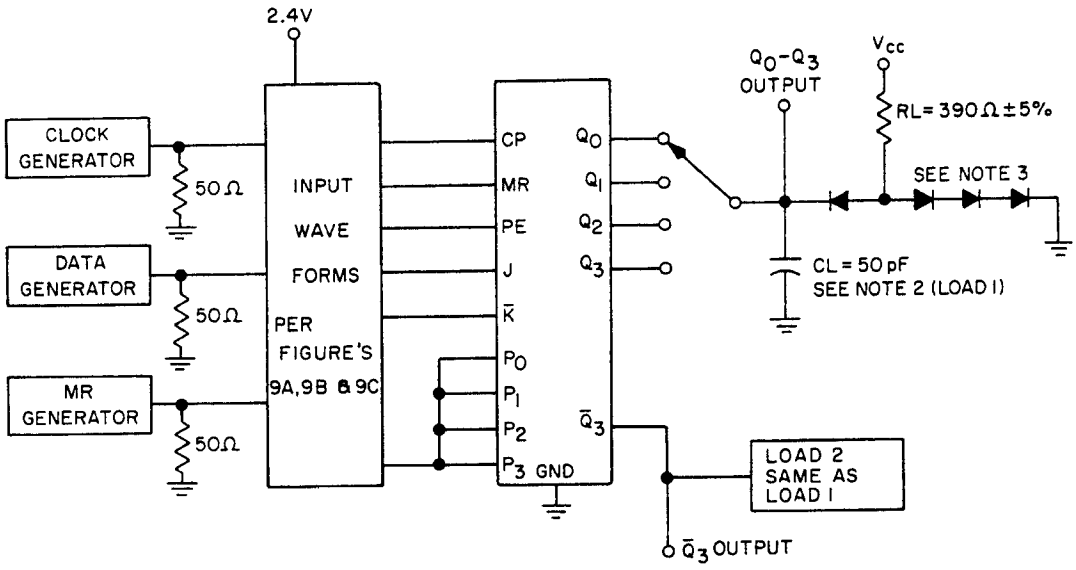

NOTES:
1. Generator rise and fall times (measured from 10% to 90% points) are < 5 ns.
2. C_L includes probe and jig capacitance.
3. All diodes are 1N3064 or equivalent.
4. Monitor Q_3 loaded when performing f_{SR} test.

FIGURE 9. Switching test circuit and waveforms for device type 04.

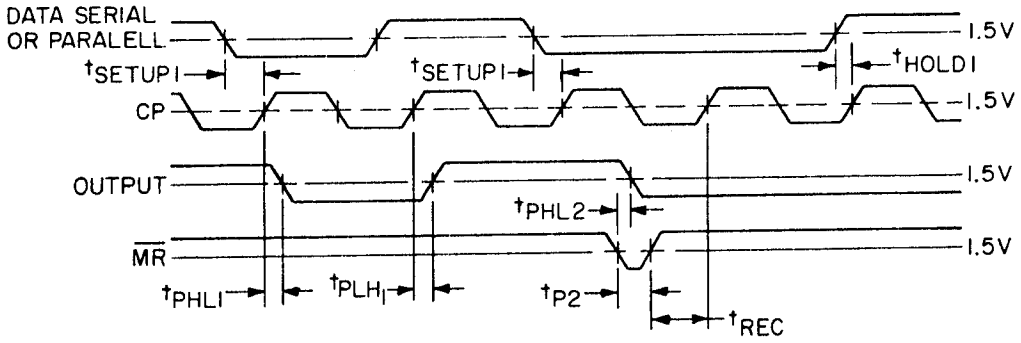

FIGURE 9a.

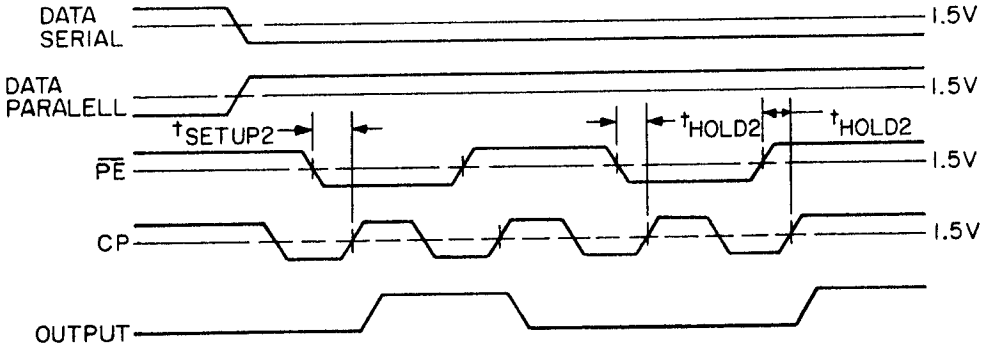

FIGURE 9b.

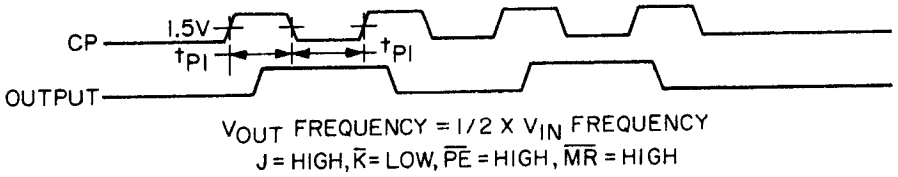

FIGURE 9c.

FIGURE 9. Switching test circuit and waveforms for device type 04 - Continued.

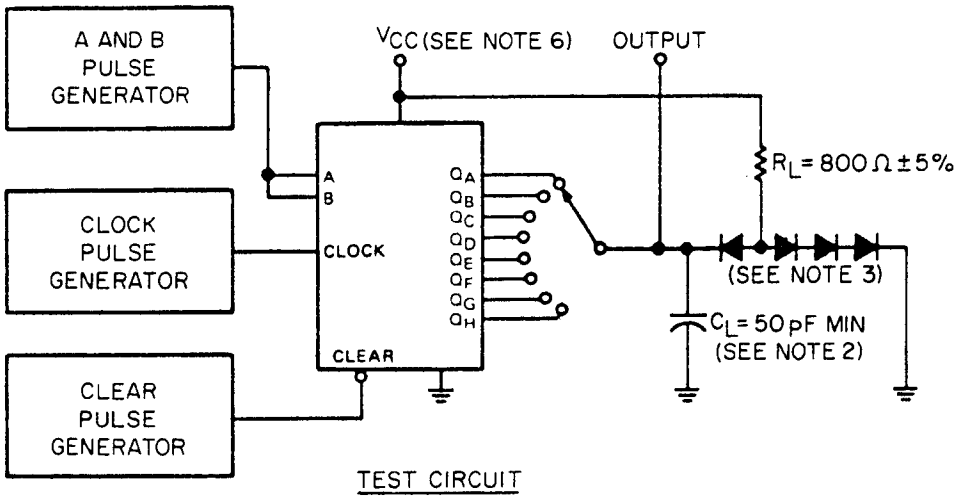

TEST CIRCUIT

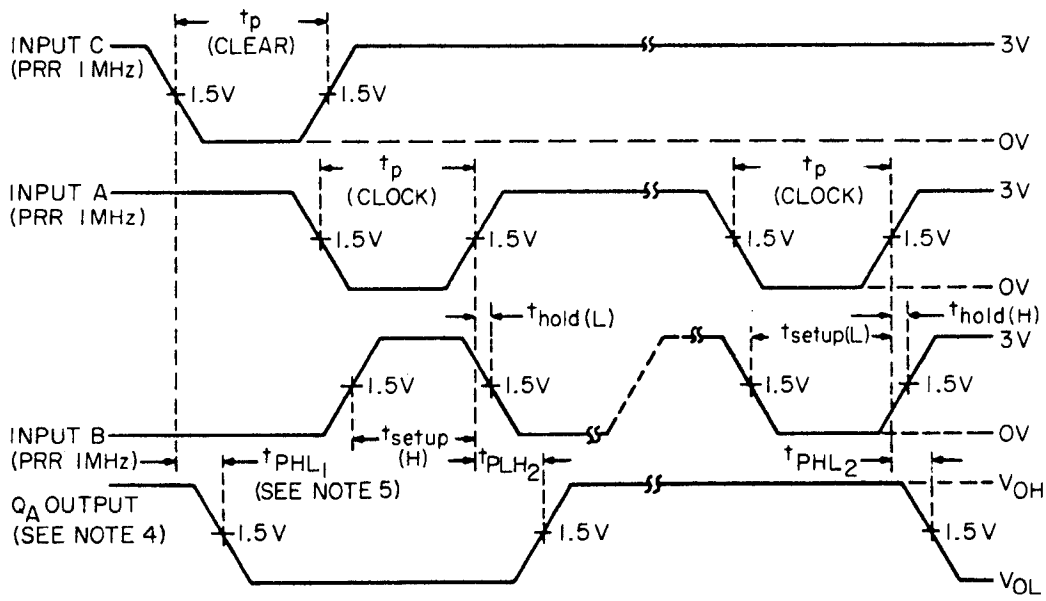

VOLTAGE WAVEFORMS

NOTES:

1. The pulse generators have the following characteristics: $t_r < 15$ ns, $t_f < 15$ ns, duty cycle $< 50\%$, $Z_{out} \approx 50\,\Omega$.
2. C_L includes probe and jig capacitance.
3. All diodes are 1N916 or equivalent.
4. Q_A output is illustrated. Relationship of serial input A and B data to other Q outputs is illustrated in the typical shift sequence.
5. Outputs are set to the high level prior to the measurement of t_{PHL} from the clear input.
6. V_{CC} shall be of sufficient amplitude to provide 5 V at device terminal.

FIGURE 10. Switching test circuits and waveforms for device type 05.

TABLE III. Group A inspection for device type 01.
Terminal conditions (pins not designated are open)

Subgroup	Symbol	MIL-STD-883 method	Cases A, B, C, D / Test No.	1 Input serial	2 Input B	3 Input C	4 V_{CC}	5 Input D	6 Mode control	7 Clock 1	8 Clock 2	9 Output D	10 Output C	11 GND	12 Output B	13 Output A	14 Input A	Meas. terminal	Test limits Min	Test limits Max	Test limits Unit
1 T_A = 25°C	V_{OH}	3006	1 2 3 4 5	 2.0 V	2.0 V	2.0 V	4.5 V	2.0 V	2.0 V 0.7 V	 C	C C C C C	 -.1 mA	 -.1 mA	GND	-.1 mA	-.1 mA -.1 mA	2.0 V	OUT A OUT B OUT C OUT D OUT A	2.4		V
	V_{OL}	3007	6 7 8 9 10	 0.7 V	0.7 V	0.7 V		0.7 V	2.0 V 0.7 V	 C	C C C C C	 2 mA	 2 mA		2 mA	2 mA 2 mA	0.7 V	OUT A OUT B OUT C OUT D OUT A		0.3	V
	I_{IL1}	3009	11 12 13 14 15 16 17	0.3 V	0.3 V	0.3 V	5.5 V	0.3 V	GND 4.5 V GND 4.5 V	0.3 V	0.3 V						0.3 V	In. ser. Inp. A Inp. B Inp. C Inp. D CLR 1 CLR 2	-0.06	-0.18	mA
	I_{IL2}	3009	18						0.3 V		4.5 V							Mode control	-0.12	-0.36	
	I_{IH1}	3010	19 20 21 22 23 24 25	2.4 V	2.4 V	2.4 V		2.4 V	4.5 V GND 4.5 V GND	4.5 V	2.4 V						2.4 V	In. ser. Inp. A Inp. B Inp. C Inp. D CLR 1 CLR 2		10	μA
	I_{IH2}	3010	26 27 28 29 30 31 32	5.5 V	5.5 V	5.5 V		5.5 V	4.5 V GND 4.5 V GND	5.5 V	5.5 V						5.5 V	In. ser. Inp. A Inp. B Inp. C Inp. D CLR 1 CLR 2		100	
	I_{IH3}	3010	33						2.4 V		GND							Mode control		20	
	I_{IH4}	3010	34						5.5 V		GND							Mode control		200	
	I_{OS}	3011	35 36 37 38		4.5 V	4.5 V	5.5 V	4.5 V	4.5 V		C C C C	 GND	 GND		GND	GND	4.5 V	OUT A OUT B OUT C OUT D	-3	-15	mA
	I_{CC}	3005	39		0.8 V	0.8 V		0.8 V	4.5 V	C	C						0.8 V	V_{CC}		9	
2	Same tests, terminal conditions, and limits as for subgroup 1, except T_A = 125°C.																				
3	Same tests, terminal conditions, and limits as for subgroup 1, except T_A = -55°C.																				
7 2/ T_A = 25°C			40 41 42 43 44	B 3/ A	B 3/	B 3/	4.5 V	B 3/	A 3/ A A B B	B 3/	B 3/ A B	L 1/	L 1/	GND	L 1/	L 1/ L L L L	B 3/	All outputs	H or L as shown 1/		

See footnotes at end of table.

TABLE III. Group A inspection for device type 01. - Continued
Terminal conditions (pins not designated are open)

Subgroup	Symbol	MIL-STD-883 method	Cases A, B, C, D Test No.	1 Input serial	2 Input B	3 Input C	4 V_{CC}	5 Input D	6 Mode control	7 Clock 1	8 Clock 2	9 Output D	10 Output C	11 GND	12 Output B	13 Output A	14 Input A	Meas. terminal	Test limits Min	Test limits Max	Test limits Unit
7 2/ T_A = 25°C			45	A	B 3/	B 3/	4.5 V	B	B	A	B	L 1/	L 1/	GND	L 1/	L 1/	B 3/	All outputs	H or L as shown 1/		
			46	A						B						H					
			47	B						B						H					
			48	B						A						H					
			49	B						B					H	L					
			50	A						B					H	L					
			51	A						A					H	L					
			52	A						B			H		L	H					
			53	B						B			H		L	H					
			54	B						A			H		L	H					
			55	B						B		H	L		H	L					
			56	A						B		H	L		H	L					
			57	A						A		H	L		H	L					
			58	A						B		L	H		L	H					
			59	B						B		L	H		L	H					
			60							A		L	H		L	H					
			61							B		H	L		H	L					
			62							B		H	L		H						
			63							A		H	L		H						
			64							B		L	H		L						
			65							B		L	H								
			66							A		L	H								
			67							B		H	L								
			68							B		H									
			69							A		H									
			70							B		L									
			71							B											
			72							A											
			73							B											
			74			A											A				
			75						A												
			76								A										
			77								B		H			H					
			78		A	B		A			B		H			H	B				
			79		A	B					A		H			H	B				
			80			A					B	H	L		H	L	B				
			81								B	H	L		H	L	A				
			82								A	H	L		H	L	A				
			83								B	H	H		H	H	A				
			84		B	B		B			B	H	H		H	H	B				
			85		B	B		B			A	H	H		H	H	B				
			86		B	B		B			B	L	L		L	L	B				
8	Same tests, terminal conditions, and limits as Subgroup 7, except T_A = 125°C and -55°C.																				
9 T_A = 25°C	f_{MAX}	Fig 6	87	D	GND	GND	5.0 V	GND	GND	C	GND	OUT		GND			GND	OUTPUT D	4		MHz
	f_{MAX}	Fig 6	88	GND	D	D		D	2.4 V	GND	C	OUT					D	OUTPUT D	4		MHz
	t_{PLH}	3003 (Fig 6)	89	D	GND	GND		GND	GND	C	GND					OUT	GND	CLK 1 to OUT A		165	ns
			90												OUT			CLK 1 to OUT B			
			91										OUT					CLK 1 to OUT C			
			92									OUT						CLK 1 to OUT D			

See footnotes at end of table.

TABLE III. Group A inspection for device type 01. - Continued
Terminal conditions (pins not designated are open)

Subgroup	Symbol	MIL-STD-883 method	Cases A, B, C, D Test No.	1 Input serial	2 Input B	3 Input C	4 V_{CC}	5 Input D	6 Mode control	7 Clock 1	8 Clock 2	9 Output D	10 Output C	11 GND	12 Output B	13 Output A	14 Input A	Meas. terminal	Test limits Min	Max	Unit
9 T_A = 25°C	t_{PLH}	3003 (Fig 6)	93	GND	D	D	5.0 V	D	2.4 V	GND	C			GND		OUT	D	CLK 2 to OUT A		165	ns
			94															CLK 2 to OUT B			
			95															CLK 2 to OUT C			
			96															CLK 2 to OUT D			
	t_{PHL}		97	D	GND	GND		GND	GND	C	GND					OUT	GND	CLK 1 to OUT A		165	ns
			98												OUT			CLK 1 to OUT B			
			99															CLK 1 to OUT C			
			100															CLK 1 to OUT D			
			101	GND	D	D		D	2.4 V	GND	C					OUT	D	CLK 2 to OUT A			
			102												OUT			CLK 2 to OUT B			
			103										OUT					CLK 2 to OUT C			
			104									OUT						CLK 2 to OUT D			
10 T_A = 125°C	f_{MAX}	Fig 6	105	D	GND	GND		GND	GND	C	GND	OUT					GND	OUTPUT D	3		MHz
	f_{MAX}	Fig 6	106	GND	D	D		D	2.4 V	GND	C	OUT					D	OUTPUT D	3		MHz
	t_{PLH}	3003 (Fig 6)	107	D	GND	GND		GND	GND	C	GND					OUT	GND	CLK 1 to OUT A		250	ns
			108												OUT			CLK 1 to OUT B			
			109										OUT					CLK 1 to OUT C			
			110									OUT						CLK 1 to OUT D			
			111	GND	D	D		D	2.4 V	GND	C					OUT	D	CLK 2 to OUT A			
			112												OUT			CLK 2 to OUT B			
			113										OUT					CLK 2 to OUT C			
			114									OUT						CLK 2 to OUT D			
	t_{PHL}		115	D	GND	GND		GND	GND	C	GND					OUT	GND	CLK 1 to OUT A		250	ns
			116												OUT			CLK 1 to OUT B			
			117										OUT					CLK 1 to OUT C			
			118									OUT						CLK 1 to OUT D			
			119	GND	D	D		D	2.4 V	GND	C					OUT	D	CLK 2 to OUT A			
			120	GND	D	D		D	2.4 V	GND	C				OUT		D	CLK 2 to OUT B			

See footnotes at end of table.

TABLE III. Group A inspection for device type 01. - Continued
Terminal conditions (pins not designated are open)

Subgroup	Symbol	MIL-STD-883 method	Cases A, B, C, D Test No.	1 Input serial	2 Input B	3 Input C	4 V_{CC}	5 Input D	6 Mode control	7 Clock 1	8 Clock 2	9 Output D	10 Output C	11 GND	12 Output B	13 Output A	14 Input A	Meas. terminal	Test limits Min	Max	Unit
10 T_A = 125°C ↓	t_{PHL} ↓	3003 (Fig 6) ↓	121	GND	D	D	5.0 V	D	2.4 V	GND	C		OUT	GND			D	CLK 2 to OUT C		250	ns
			122	GND	D	D	5.0 V	D	2.4 V	GND	C	OUT		GND			D	CLK 2 to OUT D		250	ns
11	Same tests, terminal conditions and limits as for subgroup 10, except T_A = -55°C.																				

NOTES: C = Clock pulse, see figure 6.
D = Data pulse, see figure 6.

1/ Output voltages shall be either: (a) H = 2.4 V, minimum and L = 0.4 V, maximum when using a high speed checker double comparator; or
(b) H ≥ 1.5 V and L <1.5 V when using a high speed checker single comparator.

2/ Only a summary of attributes data is required.

TABLE III. Group A inspection for device type 02.
Terminal conditions (pins not designated are open)

Subgroup	Symbol	MIL-STD-883 method	Cases A, B, C, D / Test No.	1 Input serial A	2 Input serial B	3 O_A	4 O_B	5 O_C	6 O_D	7 GND	8 Clock	9 Clear	10 O_E	11 O_F	12 O_G	13 O_H	14 V_{CC}	Meas. terminal	Test limits Min	Test limits Max	Test limits Unit
1	V_{OH}	3006	1	2.0 V	2.0 V	-.2 mA				GND	C	4.5 V					4.5 V	O_A	2.4		V
T_A = 25°C			2				-.2 mA											O_B			
			3					-.2 mA										O_C			
			4						-.2 mA									O_D			
			5										-.2 mA					O_E			
			6											-.2 mA				O_F			
			7												-.2 mA			O_G			
			8													-.2 mA		O_H			
			9	4.5 V	4.5 V	-.2 mA						2.0 V						O_A			
	V_{OL}	3007	10	0.8 V	0.8 V	4 mA						4.5 V						O_A		0.4	V
			11				4 mA											O_B			
			12					4 mA										O_C			
			13						4 mA									O_D			
			14										4 mA					O_E			
			15											4 mA				O_F			
			16												4 mA			O_G			
			17													4 mA		O_H			
			18	2.0 V		4 mA												O_A			
			19	0.8 V	2.0 V	4 mA						0.8 V						O_A			
			20	4.5 V	4.5 V	4 mA						0.8 V						O_A			
	I_{IL}	3009	21	0.4 V	4.5 V												5.5 V	In. ser. A	-0.35	-0.8	mA
			22	4.5 V	0.4 V													In. ser. B			
			23								0.4 V							CLK			
			24									0.4 V						CLR			
	I_{IH1}	3010	25	2.4 V	GND													In. ser. A		20	µA
			26	GND	2.4 V													In. ser. B			
			27								2.4 V							CLK			
			28									2.4 V						CLR			
	I_{IH2}	3010	29	5.5 V	GND													In. ser. A		.1	mA
			30	GND	5.5 V													In. ser. B			
			31								5.5 V							CLK			
			32									5.5 V						CLR			

See footnotes at end of table.

TABLE III. Group A inspection for device type 02. - Continued
Terminal conditions (pins not designated are open)

Subgroup	Symbol	MIL-STD-883 method	Cases A, B, C, D Test No.	1 Input serial A	2 Input serial B	3 O_A	4 O_B	5 O_C	6 O_D	7 GND	8 Clock	9 Clear	10 O_E	11 O_F	12 O_G	13 O_H	14 V_{CC}	Meas. terminal	Test limits Min	Test limits Max	Test limits Unit
1 T_A = 25°C	I_{OS}	3011	33	4.5 V	4.5 V	GND				GND	A	4.5 V					5.5 V	O_A	-5	-20	mA
			34				GND											O_B			
			35					GND										O_C			
			36						GND									O_D			
			37										GND					O_E			
			38											GND				O_F			
			39												GND			O_G			
			40													GND		O_H			
	I_{CC}		41	GND	GND						2.4 V	B								27	
2	Same tests, terminal conditions and limits as for subgroup 1, except T_A = 125°C.																				
3	Same tests, terminal conditions and limits as for subgroup 1, except T_A = -55°C.																				
7 2/ T_A = 25°C			42	A 3/	A 3/	L 1/	L 1/	L 1/	L 1/	GND	A 3/	B 3/	L 1/	L 1/	L 1/	L 1/	4.5 V	All outputs	H or L as shown 1/		
			43			L	L	L			A	A									
			44			L	L	L			B										
			45			H	L	L			A										
			46				L	L			B										
			47				H	L			A										
			48					L			B										
			49					H			A										
			50								B										
			51						H		A										
			52								B										
			53								A		H								
			54								B										
			55								A			H							
			56								B										
			57								A				H						
			58								B										
			59								A					H					
			60	B							A										
			61			L					B										
			62								A										
			63				L				B										
			64								A										
			65					L			B										
			66								A										
			67					L			B										
			68					L	L		A										
			69					L			B										
			70								A		L								
			71								B										
			72								A			L							
			73								B										
			74								A				L						
			75								B										
			76	A							A					L					
			77								A					L					

See footnotes at end of table.

TABLE III. Group A inspection for device type 02. - Continued
Terminal conditions (pins not designated are open)

Subgroup	Symbol	MIL-STD-883 method	Cases A, B, C, D / Test No.	1 Input serial A	2 Input serial B	3 O_A	4 O_B	5 O_C	6 O_D	7 GND	8 Clock	9 Clear	10 O_E	11 O_F	12 O_G	13 O_H	14 V_{CC}	Meas. terminal	Test limits Min	Test limits Max	Test limits Unit
7 T_A = 25°C			78	A 3/	A 3/	L 1/	L 1/	L 1/	L 1/	GND	B	A 1/	L 1/	L 1/	L 1/	L 1/	4.5 V	All outputs	H or L as shown 1/		
			79			H					A										
			80								B										
			81				H				A										
			82								B										
			83					H			A										
			84								B										
			85						H		A										
			86								B										
			87								A		H								
			88								B										
			89								A			H							
			90								B										
			91								A				H						
			92								B										
			93								A					H					
			94		B						A										
			95								B										
			96			L					A										
			97								B										
			98				L				A										
			99								B										
			100					L			A										
			101								B										
			102						L		A										
			103								B										
			104								A		L								
			105								B										
			106								A			L							
			107								B										
			108								A				L						
			109								B										
			110								A					L					
			111		A						A										
			112								B										
			113			H					A										
			114								B										
			115				H				A										
			116								B										
			117					H			A										
			118								B										
			119						H		A										
			120						H		B										
			121								A		H								
			122								B										
			123								A			H							
			124								B										
			125								A				H						
			126								B										
			127								A					H					
			128	B	B						A										
			129								B										
			130			L					A										
			131								B										
			132				L				A										
			133								B										
			134					L			A										

See footnotes at end of table.

TABLE III. Group A inspection for device type 02. - Continued

Terminal conditions (pins not designated are open)

Subgroup	Symbol	MIL-STD-883 method	Cases A, B, C, D Test No.	1 Input serial A	2 Input serial B	3 O_A	4 O_B	5 O_C	6 O_D	7 GND	8 Clock	9 Clear	10 O_E	11 O_F	12 O_G	13 O_H	14 V_{CC}	Meas. terminal	Test limits Min	Test limits Max	Test limits Unit
7 2/ T_A = 25°C			135	B 3/	B 2/	L 1/	L 1/	L 1/	H 1/	GND	B 3/	A 3/	H 1/	H 1/	H 1/	H 1/	4.5 V	All outputs	H or L as shown 1/		
			136						L		A										
			137								B										
			138								A		L								
			139								B										
			140								A			L							
			141								B										
			142								A				L						
			143								B										
			144								A					L					
			145	A	A						A										
			146								B										
			147			H					A										
			148								B										
			149				H				A										
			150								B										
			151					H			A										
			152								B										
			153						H		A										
			154								B										
			155								A		H								
			156								B										
			157								A			H							
			158								A										
			159								B				H						
			160								A				H						
			161								B				H	H					
			162			L	L	L	L		B	B	L	L	L	L					
8	Same tests, terminal conditions and limits as for subgroup 7, except T_A = 125°C and -55°C.																				
9 T_A = 25°C	f_{MAX}	Fig 7	163	G	G					GND	F	H				OUT	5.0 V	O_H	12		MHz
	t_{PHL1}	3003 (Fig 7)	164	E, G	E, G	OUT				GND	F	H					5.0 V	CLR to O_A	10	70	ns
			165				OUT											CLR to O_B			
			166					OUT										CLR to O_C			
			167						OUT									CLR to O_D			
			168										OUT					CLR to O_E			
			169											OUT				CLR to O_F			
			170												OUT			CLR to O_G			
			171													OUT		CLR to O_H			
	t_{PLH2}		172	G	G	OUT												CLK to O_A		40	
			173				OUT											CLK to O_B			
			174					OUT										CLK to O_C			
			175						OUT									CLK to O_D			
			176										OUT					CLK to O_E			

See footnotes at end of table.

TABLE III. Group A inspection for device type 02. - Continued

Terminal conditions (pins not designated are open)

Subgroup	Symbol	MIL-STD-883 method	Cases A, B, C, D Test No.	1 Input serial A	2 Input serial B	3 O_A	4 O_B	5 O_C	6 O_D	7 GND	8 Clock	9 Clear	10 O_E	11 O_F	12 O_G	13 O_H	14 V_{CC}	Meas. terminal	Test limits Min	Test limits Max	Test limits Unit
9 T_A = 25°C	t_{PLH2}	Fig 7	177	G	G					GND	F	H		OUT			5.0 V	CLK to O_F	10	40	ns
			178												OUT			CLK to O_G			
			179													OUT		CLK to O_H			
	t_{PHL2}		180			OUT												CLK to O_A		60	ns
			181				OUT											CLK to O_B			
			182					OUT										CLK to O_C			
			183						OUT									CLK to O_D			
			184										OUT					CLK to O_E			
			185											OUT				CLK to O_F			
			186												OUT			CLK to O_G			
			187													OUT		CLK to O_H			
10 T_A = 125°C	f_{MAX}	(Fig 7)	188	G	G						F	H				OUT		O_H	12		MHz
	t_{PHL1}	3003 (Fig 7)	189	E, G	E, G	OUT												CLR to O_A	10	110	ns
			190				OUT											CLR to O_B			
			191					OUT										CLR to O_C			
			192						OUT									CLR to O_D			
			193										OUT					CLR to O_E			
			194											OUT				CLR to O_F			
			195												OUT			CLR to O_G			
			196													OUT		CLR to O_H			
	t_{PLH2}		197	G	G	OUT												CLK to O_A			
			198				OUT											CLK to O_B			
			199					OUT										CLK to O_C			
			200						OUT		F	H						CLK to O_D		80	
			201										OUT					CLK to O_E			
			202											OUT				CLK to O_F			
			203												OUT			CLK to O_G			
			204													OUT		CLK to O_H			
	t_{PHL2}		205			OUT												CLK to O_A		100	
			206				OUT											CLK to O_B			
			207					OUT										CLK to O_C			
			208						OUT									CLK to O_D			
			209										OUT					CLK to O_E			
			210											OUT				CLK to O_F			
			211												OUT			CLK to O_G			
			212													OUT		CLK to O_H			
11	Same tests, terminal conditions and limits as for subgroup 10, except T_A = -55°C.																				

NOTES: C = Clock pulse, see figure 7.
D = Momentary ground then 4.5 V to clear register before start of test.
E = Outputs are set to high level prior to measurement of t_{PHL} from clear.
F = Input A from figure 7.
G = Input B from figure 7.
H = Input C from figure 7.

1/ Output voltages shall be either: (a) H = 2.4 V, minimum and L = 0.4 V, maximum when using a high speed checker double checker; or (b) H ≥ 1.5 V and L < 1.5 V when using a high speed checker single comparator.
2/ Only a summary of attributes data is required.
3/ Inputs: A = 2.0 Volt and B = 0.8 volt.

TABLE III. Group A inspection for device type 03.
Terminal conditions (pins not designated are open)

Subgroup	Symbol	MIL-STD-883 method	Cases E, F	1	2	3	4	5	6	7	8	9	10	11	12	13	14	15	16	Meas. terminal	Test limits Min	Test limits Max	Test limits Unit
			Test No.	$\overline{MR}$	$2\overline{Q}_7$	$2Q_7$	$2D_5$	$2D_1$	$2D_0$	2CP	GND	CP COM	1CP	$1D_0$	$1D_1$	$1D_5$	$1Q_7$	$1\overline{Q}_7$	V_{CC}				
T_A = 25°C [1]	I_{IL1}	3009	1	0.3 V							GND								5.5 V	$\overline{MR}$	-0.12	-0.4	mA
			2											0.3 V						$1D_0$			
			3												0.3 V					$1D_1$			
			4						0.3 V											$2D_0$			
			5					0.3 V												$2D_1$			
	I_{IL2}		6										0.3 V							1CP	-0.25	-0.6	
	I_{IL2}		7							0.3 V										2 CP	-0.25	-0.6	
	I_{IL3}		8													0.3 V				$1D_5$	-0.24	-0.8	
	I_{IL3}		9				0.3 V													$2D_5$	-0.24	-0.8	
	I_{IL4}		10									0.3 V								CP COM	-0.36	-1.2	
	I_{IH1}	3010	11	2.4 V			GND	GND	GND	GND		GND	GND	GND	GND	GND				$\overline{MR}$		20	µA
			12	GND										2.4 V	GND					$1D_0$			
			13											GND	2.4 V					$1D_1$			
			14						2.4 V						GND					$2D_0$			
			15					2.4 V	GND											$2D_1$			
	I_{IH2}		16					GND					2.4 V							1CP		30	
	I_{IH2}		17							2.4 V			GND							2CP		30	
	I_{IH3}		18							GND						2.4 V				$1D_5$		40	
	I_{IH3}		19				2.4 V									GND				$2D_5$		40	
	I_{IH4}		20				GND					2.4 V								CP COM		60	
	I_{IH5}		21	5.5 V								GND								$\overline{MR}$		100	µA
			22	GND										5.5 V						$1D_0$			
			23											GND	5.5 V					$1D_1$			
			24						5.5 V						GND					$2D_0$			
			25					5.5 V	GND											$2D_1$			
			26					GND					5.5 V							1CP			
			27							5.5 V			GND							2CP			
			28							GND						5.5 V				$1D_5$			
			29				5.5 V									GND				$2D_5$			
			30				GND					5.5 V				GND				CP COM			
	I_{OS}	3011	31										A	4.5 V	4.5 V	4.5 V	GND			$1Q_7$	-2.5	-25	mA
	I_{OS}	3011	32										A	4.5 V	4.5 V	4.5 V		GND		$1\overline{Q}_7$	-2.5	-25	mA

See footnote at end of table.

TABLE III. Group A inspection for device type 03. - Continued
Terminal conditions (pins not designated are open)

Subgroup	Symbol	MIL-STD-883 method	Cases E, F	1	2	3	4	5	6	7	8	9	10	11	12	13	14	15	16	Meas. terminal	Test limits		
			Test No.	$\overline{MR}$	$2\overline{Q}_7$	$2Q_7$	$2D_5$	$2D_1$	$2D_0$	2CP	GND	CP COM	1CP	$1D_0$	$1D_1$	$1D_5$	$1Q_7$	$1\overline{Q}_7$	V_{CC}		Min	Max	Unit
1 T_A = 25°C	I_{OS}	3011	33			GND	4.5 V	4.5 V	4.5 V	A	GND								5.5 V	$2Q_7$	-2.5	-25	mA
			34		GND		4.5 V	4.5 V	4.5 V	A										$2\overline{Q}_7$	-2.5	-25	mA
	I_{CC}	3005	35	A			GND	GND	GND					GND	GND	GND				V_{CC}		25.3	mA
	V_{OH}	3006	36	2.0 V								GND	A	2.0 V	2.0 V	0.7 V	-0.32 mA		4.5 V	$1Q_7$	2.4		Vdc
			37	2.0 V								GND	A	2.0 V	2.0 V	2.0 V	-0.32 mA			$1Q_7$			
			38	2.0 V								A	GND	2.0 V	2.0 V	2.0 V	-0.32 mA	-0.32 MA		$1Q_7$			
			39	0.7 V								A	GND	2.0 V	2.0 V	2.0 V				$1\overline{Q}_7$			
			40	2.0 V								GND	A	0.7 V	2.0 V	0.7 V				$1\overline{Q}_7$			
			41									GND	A	2.0 V	0.7 V	2.0 V				$1\overline{Q}_7$			
			42									A	GND	2.0 V	0.7 V	2.0 V				$1\overline{Q}_7$			
			43			-0.32 mA	0.7 V	2.0 V	2.0 V	A		GND								$2Q_7$			
			44				2.0 V	2.0 V	2.0 V	A		GND								$2Q_7$			
			45				2.0 V	2.0 V	2.0 V	GND		A								$2Q_7$			
			46	0.7 V	-0.32 mA		2.0 V	2.0 V	2.0 V	A		GND								$2\overline{Q}_7$			
			47	2.0 V			0.7 V	2.0 V	0.7 V	A		GND								$2\overline{Q}_7$			
			48				2.0 V	0.7 V	2.0 V	A		GND								$2\overline{Q}_7$			
			49				2.0 V	0.7 V	2.0 V	GND		A								$2\overline{Q}_7$			
	V_{OL}	3007	50									GND	A	0.7 V	2.0 V	0.7 V	3.2 mA			$1Q_7$		0.3	
			51									GND	A	2.0 V	0.7 V	2.0 V	3.2 mA			$1Q_7$			
			52									A	GND	2.0 V	2.0 V	0.7 V		3.2 mA		$1\overline{Q}_7$			
			53									GND	A	2.0 V	2.0 V	2.0 V		3.2 mA		$1\overline{Q}_7$			
			54	0.7 V								GND	A	2.0 V	2.0 V	2.0 V	3.2 mA			$1Q_7$			
			55	2.0 V		3.2 mA	0.7 V	2.0 V	0.7 V	A		GND								$2Q_7$			
			56			3.2 mA	2.0 V	0.7 V	2.0 V	A		GND								$2Q_7$			
			57			3.2 mA				GND		A								$2Q_7$			
			58		3.2 mA		0.7 V	2.0 V	2.0 V	A		GND								$2\overline{Q}_7$			
			59	2.0 V	3.2 mA		2.0 V	2.0 V	2.0 V	A		GND								$2\overline{Q}_7$			
			60	2.0 V	3.2 mA		2.0 V	2.0 V	2.0 V	GND		A								$2\overline{Q}_7$			
2	Same tests, terminal conditions and limits as for subgroup 1, except T_A = 125°C.																						
3	Same tests, terminal conditions and limits as for subgroup 1, except T_A = -55°C.																						
9 T_A = 25°C	t_{PLH1}	3003 (Fig 8)	61	2.0 V							GND	GND	IN				OUT		5.0 V	1CP to $1Q_7$	11	45	ns
	t_{PLH1}		62			OUT				IN	GND	GND							5.0 V	2CP to $2Q_7$	11	45	ns

See footnote at end of table.

TABLE III. Group A inspection for device type 03. - Continued
Terminal conditions (pins not designated are open)

Subgroup	Symbol	MIL-STD-883 method	Cases E, F Test No.	1 $\overline{MR}$	2 $2\overline{Q}_7$	3 $2Q_7$	4 $2D_5$	5 $2D_1$	6 $2D_0$	7 2CP	8 GND	9 CP COM	10 1CP	11 $1D_0$	12 $1D_1$	13 $1D_5$	14 $1Q_7$	15 $1\overline{Q}_7$	16 V_{CC}	Meas. terminal	Test limits Min	Test limits Max	Test limits Unit
9 T_A = 25°C	t_{PHL1}	3003 (Fig 8)	63	2.0 V							GND	GND	IN				OUT		5.0 V	1CP to $1\overline{Q}_7$	20	85	ns
			64	2.0 V		OUT				IN										2CP to $2Q_7$	20	85	
			65	IN										2.0 V	2.0 V	2.0 V	OUT			$\overline{MR}$ to $1Q_7$	30	110	
			66	IN		OUT	2.0 V	2.0 V	2.0 V											$\overline{MR}$ to $2Q_7$	30	110	
	f_{MAX}		67																		6	-	MHz
10 T_A = 125°C	t_{PLH1}	3003 (Fig 8)	68	2.0 V									IN				OUT			1CP to $1Q_7$	44	55	ns
	t_{PLH1}		69	2.0 V		OUT				IN										2CP to $2Q_7$	44	55	
	t_{PHL1}		70	2.0 V									IN				OUT			1CP to $1Q_7$	25	100	
	t_{PHL1}		71	2.0 V		OUT				IN										2CP to $2Q_7$	25	100	
	t_{PHL2}		72	IN										2.0 V	2.0 V	2.0 V	OUT			$\overline{MR}$ to $1Q_7$	32	125	
	t_{PHL3}		73	IN		OUT	2.0 V	2.0 V	2.0 V											$\overline{MR}$ to $2Q_7$	32	125	
	f_{MAX}		74																				MHz
11 T_A = -55°C	t_{PLH1}		75	2.0 V									IN				OUT			1CP to $1Q_7$	44	55	ns
	t_{PLH1}		76	2.0 V		OUT				IN							OUT			2CP to $2Q_7$	44	55	
	t_{PHL1}		77	2.0 V									IN				OUT			1CP to $1Q_7$	25	100	
	t_{PHL1}		78	2.0 V		OUT				IN										2CP to $2Q_7$	25	100	

See footnote at end of table.

TABLE III. Group A inspection for device type 03. - Continued
Terminal conditions (pins not designated are open)

Subgroup	Symbol	MIL-STD-883 method	Cases E, F	1	2	3	4	5	6	7	8	9	10	11	12	13	14	15	16	Meas. terminal	Test limits		
			Test No.	$\overline{MR}$	$2\overline{Q}_7$	$2\overline{Q}_7$	$2\overline{D}_5$	$2D_1$	$2D_0$	2CP	GND	CP COM	1CP	$1D_0$	$1D_1$	$1D_5$	$1Q_7$	$1\overline{Q}_7$	V_{CC}		Min	Max	Unit
11 T_A = -55°C	t_{PHL2}	3003 (Fig 8)	79	IN							GND	GND		2.0 V	2.0 V	2.0 V	OUT		5.0 V	$\overline{MR}$ to $1Q_7$	32	125	ns
	t_{PHL3}		80	IN		OUT	2.0 V	2.0 V	2.0 V		GND	GND							5.0 V	$\overline{MR}$ to $2Q_7$	32	125	ns
	f_{MAX}		81								GND	GND							5.0 V		6	-	MHz

NOTE:
A = Clock pulse (see figure 8).

TABLE III. Group A inspection for device type 04.
Terminal conditions (pins not designated are open)

Subgroup	Symbol	MIL-STD-883 method	Cases E, F Test No.	1 $\overline{MR}$	2 J	3 $\overline{K}$	4 P_0	5 P_1	6 P_2	7 P_3	8 GND	9 $\overline{PE}$	10 CP	11 $\overline{Q}_3$	12 Q_3	13 Q_2	14 Q_1	15 Q_0	16 V_{CC}	Meas. terminal	Test limits Min	Test limits Max	Test limits Unit
1 T_A = 25°C	V_{OL}	3007	1	CP			0.7 V				GND	0.7 V	2.0 V					3.2 mA	4.5 V	Q_0		0.3	V
			2					0.7 V									3.2 mA			Q_1			
			3						0.7 V							3.2 mA				Q_2			
			4							0.7 V					3.2 mA					Q_3			
			5	2.0 V						2.0 V			CP	3.2 mA						$\overline{Q}_3$			
	V_{OH}	3006	6				2.0 V													Q_0	2.4		
			7					2.0 V									-.32 mA			Q_1			
			8						2.0 V							-.32 mA				Q_2			
			9							2.0 V					-.32 mA					Q_3			
			10							0.7 V				-.32 mA						$\overline{Q}_3$			
	I_{IH1}	3010	11	2.4 V															5.5 V	$\overline{MR}$		20	μA
			12		2.4 V															J			
			13			2.4 V														$\overline{K}$			
			14				2.4 V													P_0			
			15					2.4 V												P_1			
			16						2.4 V											P_2			
			17							2.4 V										P_3			
	I_{IH2}		18										2.4 V							CP		40	
	I_{IH3}		19									2.4 V								$\overline{PE}$		46	
	I_{IH4}		20	5.5 V																$\overline{MR}$		100	
			21		5.5 V															J			
			22			5.5 V														$\overline{K}$			
			23				5.5 V													P_0			
			24					5.5 V												P_1			
			25						5.5 V											P_2			
			26							5.5 V										P_3			
			27										5.5 V							CP			
			28									5.5 V								$\overline{PE}$			
	I_{OS}	3011	29	4.5 V			4.5 V					GND	CP					GND		Q_0	-2.5	-25	mA
			30					4.5 V									GND			Q_1			
			31						4.5 V							GND				Q_2			
			32							4.5 V					GND					Q_3			
			33							GND				GND						$\overline{Q}_3$			
	I_{IL1}	3009	34	GND	0.3 V							4.5 V								J	-.12	-.4	mA
			35	CP	4.5 V	0.3 V						4.5 V								$\overline{K}$			
			36	0.3 V																$\overline{MR}$			

See footnotes at end of table.

TABLE III. Group A inspection for device type 04. - Continued
Terminal conditions (pins not designated are open)

Subgroup	Symbol	MIL-STD-883 method	Cases E, F	1	2	3	4	5	6	7	8	9	10	11	12	13	14	15	16	Meas. terminal	Test limits		
			Test No.	$\overline{MR}$	J	$\overline{K}$	P_0	P_1	P_2	P_3	GND	$\overline{PE}$	CP	$\overline{Q}_3$	Q_3	Q_2	Q_1	Q_0	V_{CC}		Min	Max	Unit
1 T_A = 25°C	I_{IL1}	3009	37				0.3 V				GND	GND							5.5 V	P_0	-.12	-.4	mA
			38					0.3 V												P_1			
			39						0.3 V											P_2			
			40							0.3 V										P_3			
	I_{IL2}		41										0.3 V							CP	-.35	-.8	mA
	I_{IL3}		42									0.3 V								$\overline{PE}$	-0.36	-.92	mA
	V_{IC}		43	-10 mA															4.5 V	$\overline{MR}$		-1.5	V
			44		-10 mA															J			
			45			-10 mA													$\overline{K}$			
			46				-10 mA													P_0			
	V_{IC}		47					-10 mA												P_1			
			48						-10 mA											P_2			
			49							-10 mA										P_3			
	I_{CC}	3005	50	CP								4.5 V	4.5 V						5.5 V	V_{CC}		23	mA
2	Same tests, terminal conditions and limits as for subgroup 1, except T_A = 125°C and VIC tests are omitted.																						
3	Same tests, terminal conditions and limits as for subgroup 1, except T_A = -55°C and VIC tests are omitted.																						
7 T_A = 25°C	Truth table tests		51	B	B	B	5.5 V	5.5 V	5.5 V	5.5 V	GND	5.5 V	A				L	L	5.5 V	See note 1			
			52	A	B								B										
			53		B								A										
			54		A								B										
			55		A								A					H					
			56		B								B					H					
			57		B								A				H	L					
			58		A	A							B				H	L					
			59										A				L	H					
			60										B				L						
			61										A				H						
			62		B								B										
			63		B								A										
			64		A	B							B										
			65										A					L					
			66	B									A				L						
			67	B	GND	5.5 V	B	B				B	A				L						
			68	A				A				B	B				L						
			69									A	A				H						
			70									A	B				H						
			71									B	A				L						
			72				A	B					B										
			73				A	B					A					H					
			74				B	B					B					H					
			75				B	B					A					L					
			76				A	A					B					L					
			77									A	A				H	H					
			78									A	B				H	H					

See footnotes at end of table.

TABLE III. Group A inspection for device type 04. - Continued
Terminal conditions (pins not designated are open)

Subgroup	Symbol	MIL-STD-883 method	Cases E, F	1	2	3	4	5	6	7	8	9	10	11	12	13	14	15	16	Meas. terminal	Test limits		
			Test No.	$\overline{MR}$	J	$\overline{K}$	P_0	P_1	P_2	P_3	GND	$\overline{PE}$	CP	$\overline{Q}_3$	Q_3	Q_2	Q_1	Q_0	V_{CC}		Min	Max	Unit
7 T_A = 25°C	Truth table tests		79	B	GND	5.5 V	A	A	5.5 V	5.5 V	GND	B	B				L	L	5.5 V		See note 1		
			80	A								B	B				L	L				
			81	A								A	H				H	H				
			82	B								B	A				L	L				
			83	B	B	B	B	B				GND	A				L	L				
			84	A	B	B	A	A					B				L	L				
			85		A	A							A				H	H				
			86										B					H				
			87										A					H				
			88				B						B					H				
			89		B								A					L				
			90										B					L				
			91										A					L				
			92				A	B					B					L				
			93		A	B							A				L	H				
			94										B					H				
			95										A					H				
			96										B					H				
			97										A					H				
			98	B	B	B			B				A					L				
			99	B			5.5 V	5.5 V	B	B			A		L	L						
			100	A					A	A			B		L	L						
			101						A				A		H	H						
			102						B				B		H	H						
			103						B	B			A		H	L						
			104						A				B		H	L						
			105						A				A		L	H						
			106						B				B			H						
			107						B				A			L						
			108						A				B			L						
			109						A				A			H						
			110						B	A			B			H						
			111						B				A		H	L						
			112						A				B		H	L						
			113						A				A		H	H						
			114	B					A				A		L	L						
			115	B	GND	5.5 V	A	B	5.5 V	5.5 V		B	A			L						
			116	A								B	A			L						
			117									B	A			H						
			118									A	B			H						
			119					A				A	A		H	H	H					
			120				B					B	B				H					
			121									B	A				H					
			122									A	B				H					
			123					B				A	A				L					
			124				A					B	B									
			125									B	A									
			126									A	B									
			127					A					A				H					
			128	B				B									H					
			129														L					
			130														L					
			131					A				B				L						
			132	A									B									
			133										A				H					
			134									A	B				H					
			135									A	A			H	H					

See footnotes at end of table.

TABLE III. Group A inspection for device type 04. - Continued
Terminal conditions (pins not designated are open)

Subgroup	Symbol	MIL-STD-883 method	Cases E, F	1	2	3	4	5	6	7	8	9	10	11	12	13	14	15	16	Meas. terminal	Test limits		
			Test No.	$\overline{MR}$	J	$\overline{K}$	P_0	P_1	P_2	P_3	GND	$\overline{PE}$	CP	$\overline{Q}_3$	Q_3	Q_2	Q_1	Q_0	V_{CC}		Min	Max	Unit
7 T_A = 25°C	Truth table tests		136	A	GND	5.5 V	B	B		5.5 V	GND	B	B			H	H		5.5 V				
			137									B	A			H	L						
			138									A	B			H	L						
			139									A	A			L	L						
			140				A	A				B	B				L						
			141									B	A				H						
			142									A	B				H						
			143						A				A			H	H						
			144	B					B							L	L						
			145																				
			146																				
			147						A	B		B		H	L								
			148	A								B	B										
			149									B	A										
			150									A	B										
			151							A		A	A	L	H								
			152				B	B	B			B	B										
			153									B	A										
			154									A	B										
			155							B		A	A	H	L								
			156				A	A	A			B	B										
			157									B	A										
			158									A	B										
			159							A			A	L	H								
			160	B						B				H	L								
			161																				
			162																				
			163		A	A						5.5 V											
			164	A	A	A															See note 1		
			165		B	A																	
			166		B	B												L					
			167		A	B																	
			168		A	A																	
			169		B	B																	
			170		A	A																	
			171			A							B										
			172			A							A					H					
			173			B																	
			174		B	B																	
			175		B	A																	
			176		A	A																	
			177		B	B																	
			178		A	A																	
			179	B			A	A				GND					L	L					
			180	A			A	A															
			181				B	A															
			182				B	B															
			183				A	B															
			184				A	A															
			185				B	B															
			186				A	A															
			187					A					B										
			188					A					A				H	H					
			189				B	B															
			190				B	B															
			191				B	A															
			192				A	A															

See footnotes at end of table.

TABLE III. Group A inspection for device type 04. - Continued
Terminal conditions (pins not designated are open)

Subgroup	Symbol	MIL-STD-883 method	Cases E, F Test No.	1 $\overline{MR}$	2 J	3 $\overline{K}$	4 P_0	5 P_1	6 P_2	7 P_3	8 GND	9 $\overline{PE}$	10 CP	11 $\overline{Q}_3$	12 Q_3	13 Q_2	14 Q_1	15 Q_0	16 V_{CC}	Meas. terminal	Test limits Min	Test limits Max	Test limits Unit
7 T_A = 25°C	Truth table tests		193	A			B	B			GND	GND	A				H	H	5.5 V		See note 1		
			194	A			A	A									H	H					
			195	B					A	A					L	L							
			196	A					A	A													
			197						B	A													
			198						B	B													
			199						A	B													
			200						A	A													
			201						B	B													
			202						A	A													
			203							A			B										
			204							A			A		H	H							
			205							B													
			206						B	B													
			207						B	A													
			208						A	A													
			209						B	B													
			210						A	A													
8	Same tests, terminal conditions and limits as subgroup 7, except T_A = 125°C and -55°C.																						
9 T_A = 25°C	t_{PLH1}	3003 (Fig 9)	211	2.4 V	2.4 V	GND	2.4 V	2.4 V	2.4 V	2.4 V	GND	2.4 V	IN					OUT	5.0 V	Q_0	20	60	ns
			212													OUT	OUT			Q_1			
			213																	Q_2			
			214												OUT					Q_3			
			215											OUT						$\overline{Q}_3$			
	t_{PHL1}		216											OUT						$\overline{Q}_3$	25	65	
			217												OUT					Q_3			
			218													OUT				Q_2			
			219														OUT			Q_1			
			220															OUT		Q_0			
	t_{PHL2}		221	IN									2.4 V					OUT		Q_0			
			222														OUT			Q_1			
			223													OUT				Q_2			
			224												OUT					Q_3			
	t_{PHL3}		225											OUT						$\overline{Q}_3$	30	90	
	f_{SR}	Fig 9	226	2.4 V									IN							Q_0	8	25	MHz
10 T_A = 125°C	t_{PLH1}	3003 (Fig 9)	227	2.4 V	2.4 V	GND	2.4 V	2.4 V	2.4 V	2.4 V	GND	2.4 V	IN					OUT	5.0 V	Q_0	25	100	ns
			228													OUT	OUT			Q_1			
			229																	Q_2			
			230												OUT					Q_3			
			231											OUT						$\overline{Q}_3$			
	t_{PHL1}		232											OUT						$\overline{Q}_3$	25	100	ns

See footnotes at end of table.

TABLE III. Group A inspection for device type 04. - Continued
Terminal conditions (pins not designated are open)

Subgroup	Symbol	MIL-STD-883 method	Cases E, F	1	2	3	4	5	6	7	8	9	10	11	12	13	14	15	16	Meas. terminal	Test limits		
			Test No.	$\overline{MR}$	J	$\overline{K}$	P_0	P_1	P_2	P_3	GND	$\overline{PE}$	CP	$\overline{Q}_3$	Q_3	Q_2	Q_1	Q_0	V_{CC}		Min	Max	Unit
10 T_A = 125°C	t_{PHL1}	3003 (Fig 9)	233	2.4 V	2.4 V	GND	2.4 V	2.4 V	2.4 V	2.4 V	GND	2.4 V	IN		OUT			OUT	5.0 V	Q_3	25	100	ns
			234													OUT				Q_2			
			235														OUT			Q_1			
			236															OUT		Q_0			
	t_{PHL2}		237	IN									2.4 V					OUT		Q_0	30	100	
			238														OUT			Q_1			
			239													OUT				Q_2			
			240												OUT					Q_3			
	t_{PHL3}		241											OUT						$\overline{Q}_3$	35	120	
	f_{SR}	Fig 9	242	2.4 V									IN					OUT		Q_0	5	25	MHz
11 T_A = -55°C	t_{PLH1}	3003 (Fig 9)	243	2.4 V	2.4 V	GND	2.4 V	2.4 V	2.4 V	2.4 V	GND	2.4 V	IN							Q_0	14	65	ns
			244														OUT			Q_1			
			245													OUT				Q_2			
			246												OUT					Q_3			
			247											OUT						$\overline{Q}_3$			
	t_{PHL1}		248											OUT						$\overline{Q}_3$	20	70	
			249												OUT					Q_3			
			250													OUT				Q_2			
			251														OUT			Q_1			
			252																	Q_0			
	t_{PHL2}		253	IN									2.4 V							Q_0			
			254														OUT			Q_1			
			255													OUT				Q_2			
			256												OUT					Q_3			
	t_{PHL3}		257											OUT						$\overline{Q}_3$	25	95	
	f_{SR}	Fig 9	258	2.4 V									IN							Q_0	6	25	MHz

NOTES:

1. INPUTS: A = 2.0 Volts and B = GND
   OUTPUTS: Output voltage shall be either
   (a) H = 2.4 volts minimum and L = 0.4 volt maximum when using a high-speed checker double comparator or
   (b) H $\geq$ 1.5 volts and L < 1.5 volts when using a high-speed checker single comparator.
2. The term P-XX means that the affected pin is connected to pin XX for the test.
3. See figure 9 for CP.

TABLE III. Group A inspection for device type 05.
Terminal conditions (pins not designated are open)

Subgroup	Symbol	MIL-STD-883 method	Cases A, B, C, D Test No.	1 Input serial A	2 Input serial B	3 O_A	4 O_B	5 O_C	6 O_D	7 GND	8 Clock	9 Clear	10 O_E	11 O_F	12 O_G	13 O_H	14 V_{CC}	Meas. terminal	Test limits Min	Test limits Max	Test limits Unit
1 T_A = 25°C	V_{OH}	3006	1	2.0 V	2.0 V	-.2 mA				GND	C	4.5 V					4.5 V	O_A	2.4		V
			2				-.2 mA											O_B			
			3					-.2 mA										O_C			
			4						-.2 mA									O_D			
			5										-.2 mA					O_E			
			6											-.2 mA				O_F			
			7												-.2 mA			O_G			
			8													-.2 mA		O_H			
			9	4.5 V	4.5 V	-.2 mA						2.0 V						O_A			
	V_{OL}	3007	10	0.7 V	0.7 V	2 mA						4.5 V						O_A		0.3	
			11				2 mA											O_B			
			12					2 mA										O_C			
			13						2 mA									O_D			
			14										2 mA					O_E			
			15											2 mA				O_F			
			16												2 mA			O_G			
			17													2 mA		O_H			
			18	2.0 V		2 mA												O_A			
			19	0.7 V	2.0 V	2 mA												O_A			
			20	4.5 V	4.5 V	2 mA						0.7 V						O_A			
	I_{IL1}	3009	21	0.3 V	4.5 V												5.5 V	In. ser. A	-0.06	-.18	mA
			22	4.5 V	0.3 V													In. ser. B			
			23								0.3 V							CLK			
	I_{IL2}		24									0.3 V						CLR	-0.12	-.36	
	I_{IH1}	3010	25	2.4 V	GND													In. ser. A		10	μA
			26	GND	2.4 V													In. ser. B			
			27								2.4 V							CLK			
	I_{IH2}		28									2.4 V						CLR		20	
	I_{IH3}		29	5.5 V	GND													In. ser. A		100	
			30	GND	5.5 V													In. ser. B			
			31								5.5 V							CLK			
	I_{IH4}		32									5.5 V						CLR		200	

See footnotes at end of table.

TABLE III. Group A inspection for device type 05. - Continued

Terminal conditions (pins not designated are open)

Subgroup	Symbol	MIL-STD-883 method	Cases A, B, C, D Test No.	1 Input serial A	2 Input serial B	3 O_A	4 O_B	5 O_C	6 O_D	7 GND	8 Clock	9 Clear	10 O_E	11 O_F	12 O_G	13 O_H	14 V_{CC}	Meas. terminal	Test limits Min	Test limits Max	Test limits Unit
1 T_A = 25°C	I_{OS}	3011	33	4.5 V	4.5 V	GND				GND	A	4.5 V					5.5 V	O_A	-3	-15	mA
			34				GND											O_B			
			35					GND										O_C			
			36						GND									O_D			
			37										GND					O_E			
			38											GND				O_F			
			39												GND			O_G			
			40													GND		O_H			
	I_{CC1}	3005	41	GND	GND						0.3 V	D						V_{CC}		9	
	I_{CC2}	3005	42	GND	GND						2.4 V	D						V_{CC}		9	
2	Same tests, terminal conditions and limits as for subgroup 1, except T_A = 125°C.																				
3	Same tests, terminal conditions and limits as for subgroup 1, except T_A = -55°C.																				
7 2/ T_A = 25°C			43	A 3/	A 3/	L 1/	L 1/	L 1/	L 1/	GND	2.0 V3/	0.8 V3/	L 1/	L 1/	L 1/	L 1/	4.5 V	All outputs	H or L as shown 1/		
			44			L	L	L			2.0 V	2.0 V									
			45			L	L	L			0.7 V										
			46			H	L	L			2.0 V										
			47				L	L			0.7 V										
			48				H	L			2.0 V										
			49					L			0.7 V										
			50					H			2.0 V										
			51								0.7 V										
			52						H		2.0 V										
			53								0.7 V										
			54								2.0 V		H								
			55								0.7 V										
			56								2.0 V			H							
			57								0.7 V										
			58								2.0 V				H						
			59								0.7 V										
			60								2.0 V					H					
			61	B							2.0 V										
			62								0.7 V										
			63			L					2.0 V										
			64								0.7 V										
			65				L				2.0 V										
			66								0.7 V										
			67					L			2.0 V										
			68					L			0.7 V										
			69					L	L		2.0 V										
			70					L	L		0.7 V										
			71								2.0 V		L								
			72								0.7 V										
			73								2.0 V			L							
			74								0.7 V										
			75								2.0 V				L						
			76								0.7 V										
			77								2.0 V					L					

See footnotes at end of table.

TABLE III. Group A inspection for device type 05. - Continued
Terminal conditions (pins not designated are open)

Subgroup	Symbol	MIL-STD-883 method	Cases A, B, C, D / Test No.	1 Input serial A	2 Input serial B	3 O_A	4 O_B	5 O_C	6 O_D	7 GND	8 Clock	9 Clear	10 O_E	11 O_F	12 O_G	13 O_H	14 V_{CC}	Meas. terminal	Test limits Min	Test limits Max	Test limits Unit
7 2/ T_A = 25°C			78	A	A	L 1/	L 1/	L 1/	L 1/	GND	2.0 V3/	2.0 V3/	L 1/	L 1/	L 1/	L 1/	4.5 V	All outputs	H or L as shown 1/		
			79			L					0.7 V										
			80			H					2.0 V										
			81								0.7 V										
			82				H				2.0 V										
			83								0.7 V										
			84					H			2.0 V										
			85								0.7 V										
			86						H		2.0 V										
			87								0.7 V										
			88								2.0 V		H								
			89								0.7 V										
			90								2.0 V			H							
			91								0.7 V										
			92								2.0 V				H						
			93								0.7 V										
			94								2.0 V					H					
			95		B						2.0 V										
			96								0.7 V										
			97			L					2.0 V										
			98								0.7 V										
			99				L				2.0 V										
			100								0.7 V										
			101					L			2.0 V										
			102								0.7 V										
			103						L		2.0 V										
			104								0.7 V										
			105								2.0 V		L								
			106								0.7 V										
			107								2.0 V			L							
			108								0.7 V										
			109								2.0 V				L						
			110								0.7 V										
			111								2.0 V					L					
			112		A						2.0 V										
			113								0.7 V										
			114			H					2.0 V										
			115								0.7 V										
			116				H				2.0 V										
			117								0.7 V										
			118					H			2.0 V										
			119								0.7 V										
			120						H		2.0 V										
			121								0.7 V										
			122								2.0 V		H								
			123								0.7 V										
			124								2.0 V			H							
			125								0.7 V										
			126								2.0 V				H						
			127								0.7 V										
			128								2.0 V					H					
			129	B	B						2.0 V										
			130								0.7 V										
			131			L					2.0 V										
			132								0.7 V										
			133				L				2.0 V										
			134				L				0.7 V										
			135				L	L			2.0 V										

See footnotes at end of table.

TABLE III. Group A inspection for device type 05. - Continued
Terminal conditions (pins not designated are open)

Subgroup	Symbol	MIL-STD-883 method	Cases A, B, C, D Test No.	1 Input serial A	2 Input serial B	3 O_A	4 O_B	5 O_C	6 O_D	7 GND	8 Clock	9 Clear	10 O_E	11 O_F	12 O_G	13 O_H	14 V_{CC}	Meas. terminal	Test limits Min	Test limits Max	Test limits Unit
7 2/ T_A = 25°C			136	B 3/	B 3/	L 1/	L 1/	L 1/	H 1/	GND	0.7 V	2.0 V 3/	H 1/	H 1/	H 1/	H 1/	4.5 V	All outputs	H or L as shown 1/		
			137						L		2.0 V										
			138								0.7 V		L								
			139								2.0 V										
			140								0.7 V			L							
			141								2.0 V										
			142								0.7 V				L						
			143								2.0 V										
			144								0.7 V					L					
			145								2.0 V										
			146	A	A						2.0 V										
			147								0.7 V										
			148			H					2.0 V										
			149								0.7 V										
			150				H				2.0 V										
			151								0.7 V										
			152					H			2.0 V										
			153								0.7 V										
			154						H		2.0 V										
			155								0.7 V										
			156								2.0 V		H								
			157								0.7 V										
			158								2.0 V			H							
			159								0.7 V										
			160								2.0 V				H						
			161								0.7 V				H						
			162								2.0 V				H	H					
			163			L	L	L	L		2.0 V	0.8 V	L	L	L	L					
8	Same tests, terminal conditions and limits as for subgroup 7, except T_A = 125°C and -55°C																				
9 T_A = 25°C	f_{MAX}	(Fig 10)	164	G	G					GND	F	H				OUT	5.0 V	O_H	4		MHz
	t_{PHL1}	3003 (Fig 10)	165	E, G	E, G	OUT												CLR to O_A		110	ns
			166				OUT											CLR to O_B			
			167					OUT										CLR to O_C			
			168						OUT									CLR to O_D			
			169										OUT					CLR to O_E			
			170											OUT				CLR to O_F			
			171												OUT			CLR to O_G			
			172													OUT		CLR to O_H			
	t_{PLH2}		173	G	G	OUT												CLK to O_A		80	
			174				OUT											CLK to O_B			
			175					OUT										CLK to O_C			
			176						OUT									CLK to O_D			
			177										OUT					CLK to O_E			
			178											OUT				CLK to O_F			
			179												OUT			CLK to O_G			
			180													OUT		CLK to O_H			

See footnotes at end of table.

TABLE III. Group A inspection for device type 05. - Continued
Terminal conditions (pins not designated are open)

Subgroup	Symbol	MIL-STD-883 method	Cases A, B, C, D Test No.	1 Input serial A	2 Input serial B	3 O_A	4 O_B	5 O_C	6 O_D	7 GND	8 Clock	9 Clear	10 O_E	11 O_F	12 O_G	13 O_H	14 V_{CC}	Meas. terminal	Test limits Min	Max	Unit
9 T_A = 25°C	t_{PHL2}	3003 (Fig 10)	181	G	G	OUT				GND	F	H					5.0 V	CLK to O_A		120	ns
			182				OUT											CLK to O_B			
			183					OUT										CLK to O_C			
			184						OUT									CLK to O_D			
			185										OUT					CLK to O_E			
			186											OUT				CLK to O_F			
			187												OUT			CLK to O_G			
			188													OUT		CLK to O_H			
10 T_A = 125°C	f_{MAX}	(Fig 10)	189	G	G											OUT		O_H	3		MHz
	t_{PHL1}	3003 (Fig 10)	190	E, G	E, G	OUT												CLR to O_A		140	ns
			191				OUT											CLR to O_B			
			192					OUT										CLR to O_C			
			193						OUT									CLR to O_D			
			194										OUT					CLR to O_E			
			195											OUT				CLR to O_F			
			196												OUT			CLR to O_G			
			197													OUT		CLR to O_H			
	t_{PLH2}		198	G	G	OUT												CLK to O_A		120	
			199				OUT											CLK to O_B			
			200					OUT										CLK to O_C			
			201						OUT									CLK to O_D			
			202										OUT					CLK to O_E			
			203											OUT				CLK to O_F			
			204												OUT			CLK to O_G			
			205													OUT		CLK to O_H			
	t_{PHL2}		206			OUT												CLK to O_A			
			207				OUT											CLK to O_B			
			208					OUT										CLK to O_C			
			209						OUT									CLK to O_D			
			210										OUT					CLK to O_E			
			211											OUT				CLK to O_F			
			212												OUT			CLK to O_G			
			213													OUT		CLK to O_H			
11	Same tests, terminal conditions and limits as for subgroup 10, except T_A = -55°C.																				

NOTES: C = Clock pulse (see figure 7).
D = Momentary ground then 4.5 V to clear register before start of test.
E = Outputs are set to high level prior to measurement of t_{PHL} from clear.
F = Input A from figure 7.
G = Input B from figure 7.
H = Input C from figure 7.

1/ Output voltages shall be either: (a) H = 2.4 V, minimum and L = 0.4 V, maximum when using a high speed checker double comparator; or (b) H ≥ 1.5 V and L < 1.5 V when using a high speed checker single comparator.
2/ Only a summary of attributes data is required.
3/ INPUTS: A = 2.0 Volts and B = 0.7 Volt.

(c) Requirement for certificate of compliance, if applicable.
(d) Requirements for notification of change of product or process to procuring activity in addition to notification to the qualifying activity, if applicable.
(e) Requirements for packaging and packing.
(f) Requirements for failure analysis (including required test condition of method 5003), corrective action and reporting of results, if applicable.
(g) Requirements for product assurance options.
(h) Requirements for carriers, special lead lengths or lead forming, if applicable. These requirements shall not affect the part number. Unless otherwise specified, these requirements will not apply to direct purchase by or direct shipment to the Government.

6.4 Abbreviations, symbols and definitions. The abbreviations, symbols, and definitions used herein are defined in MIL-STD-1313, MIL-STD-1331, and as follows:

GND - - - - - - - - - - - - - - - - Electrical ground (common terminal)
V_{IN} - - - - - - - - - - - - - - - - Voltage level at an input terminal
I_{IN} - - - - - - - - - - - - - - - - Current-flowing into an input terminal

6.5 Logistic support. Lead materials and finishes (see 3.3) are interchangeable. Unless otherwise specified, microcircuits procured for Government logistic support will be procured to device class B (see 1.2.2), lead material and finish C (see 3.3). Longer lead lengths and lead forming shall not affect the part number.

6.6 Substitutability. Microcircuits covered by this specification are substitutable for the following commercial device types:

Device type	Commercial type
01	54L95
02	54L164
03	93L28
04	93L00
05	76L70

Custodian:
Air Force - 17

Review activities:
Air Force - 11, 17, 80, 85
DSA - ES

User activity:
Air Force - 19

Preparing activity:
Air Force - 17

Agent:
DSA - ES

(Project 5962-F056)