MILITARY SPECIFICATION

MICROCIRCUITS, DIGITAL TTL, LOW POWER
SHIFT REGISTERS, MONOLITHIC SILICON

This amendment forms a part of Military Specification MIL-M-38510/28B, dated 2 August 1974.

PAGE 1

* 1.2, delete (including example of part number) and substitute:

"1.2 Part number. The complete part number shall be in accordance with MIL-M-38510."

1.2.3, Case outline: Delete and substitute:

"1.2.3 Case outline. The case outline shall be designated as follows:

Letter	Case outline, MIL-M-38510, appendix C
A	F-1 (14-pin, 1/4" x 1/4" flat pack)
B	F-3 (14-pin, 1/8" x 1/4" flat pack)
C	D-1 (14-pin, 1/4" x 3/4" dual-in-line pack)
D	F-2 (14-pin, 1/4" x 3/8" flat pack)
E	D-2 (16-pin, 1/4" x 7/8" dual-in-line pack)
F	F-5 (16-pin, 1/4" x 3/8" flat pack)"

PAGE 3

* 4.2, second sentence: Delete "A, B, and C" and substitute A, B, C, and D". Delete third sentence.

* 4.3: Delete subparagraphs (a), (b), (c), (e), and (g).

PAGE 7

TABLE I. Electrical performance characteristics - Continued; Delete and substitute:

"

TABLE I. Electrical performance characteristics. - Continued.

Test	Symbol	Conditions	Device type	Limits		Units
				Min	Max	
Maximum clock frequency	f_{MAX}	V_{CC} = 5 V, C_L = 50 pF, R_L = 1600Ω (figure 8)	03	6	---	MHz
Propagation delay time, low-to-high level, clock input to Q outputs	t_{PLH1}			11	55	ns
Propagation delay time high-to-low level, clock input to Q outputs	t_{PHL1}			20	100	ns
Propagation delay, high-to-low level, $\overline{MR}$ to Q outputs	t_{PHL2}			30	125	ns
Width of clock pulse	t_{P1}			65	20	ns
Width of MR pulse with clock HIGH	t_{P2}			65	20	ns
Width of MR pulse with clock LOW	t_{P3}			75	20	ns

PAGE 7 -Continued

TABLE I. Electrical performance characteristics. -Continued

Test	Symbol	Conditions	Device type	Limits Min	Limits Max	Units
Shift Right frequency	f_{SR}	V_{CC} = 5 V, C_L = 50 pF, R_L = 1600Ω (figure 9)	04	5	25	MHz
Propagation delay, low-to-high, clock to output	t_{PLH1}			14	100	ns
Propagation delay, high-to-low, clock to output	t_{PHL1}			20	100	ns
Propagation delay, high-to-low, $\overline{MR}$ to output (except $\overline{Q3}$	t_{PHL2}			20	100	ns
Propagation delay, high-to-low, $\overline{MR}$ to $\overline{Q3}$	t_{PHL3}			25	120	ns
Clock pulse width	t_{P1}			20	55	ns
Master reset pulse width	t_{P2}			20	75	ns
Setup time, data to clock	t_{SETUP1}			25	60	ns
Setup time, $\overline{PE}$ to clock	t_{SETUP2}			25	70	ns
Hold time, data to clock	t_{HOLD1}			-40	0	ns
Hold time, $\overline{PE}$ to clock	t_{HOLD2}	V_{CC} = 5 V, C_L = 50 pF R_L = 1600Ω (figure 9)	04	-65	-20	ns
Recovery time, $\overline{MR}$ to clock	t_{REC}			20	60	ns
Maximum clock frequency	f_{MAX}	V_{CC} = 5 V, C_L = 50 pF, R_L = 3.9K (figure 10)	05	3	---	MHz
Propagation delay time, high-to-low level, clear input to Q outputs	t_{PHL1}				140	ns
Propagation delay time, high-to-low level, clock input to Q outputs	t_{PHL2}				135	ns
Propagation delay time, low-to-high level, clock input to Q outputs	t_{PLH2}				120	ns
Width of clock or clear pulse	t_p			60	---	ns
Data setup time	$t_{SETUP(H)}$			40	---	ns
	$t_{SETUP(L)}$			40	---	ns
Data hold time	$t_{HOLD(H)}$			-20	---	ns
	$t_{HOLD(L)}$			-20	---	ns

1/ Not more than one output should be shorted at a time.
2/ I_{CC} is measured in accordance with Table III requirements."

* TABLE II, MIL-STD-883 test requirement column: Delete "Group C end point electrical parameters (Method 5005)" and substitute "Groups C and D end point electrical parameters (Method 5005)."

* 4.4.1, first sentence: Delete "consist of the test subgroups and LTPD values shown in" and substitute "be in accordance with".

PAGE 9

* 4.4.2, delete and substitute:

"Group B inspection. Group B inspection shall be in accordance with table II of Method 5005 of MIL-STD-883."

* 4.4.3: Delete title "Group C inspection" and substitute "Groups C and D inpsections." Delete first sentence and substitute "Groups C and D inspections shall be in accordance with tables III and IV of Method 5005 of MIL-STD-883 and as follows:" Delete subparagraph (b), (c), and (e). Subparagraph (f): Delete "Subgroups 7 and 8" and substitute "Subgroups 3 and 4".

PAGE 10

FIGURE 1. Terminal connections, Device types 02, 05: Delete Device type "05".

PAGE 11

ADD:

"

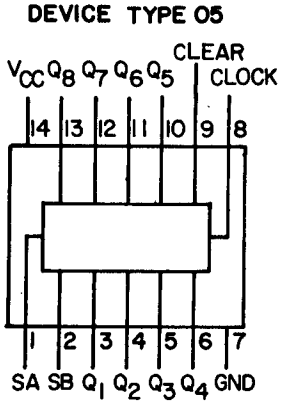

CASE C

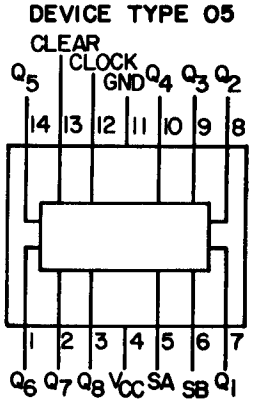

CASE A, B AND D

Page 22

FIGURE 4. Burn-in and life test circuits - Continued, Device type 05; Delete and substitute:

"

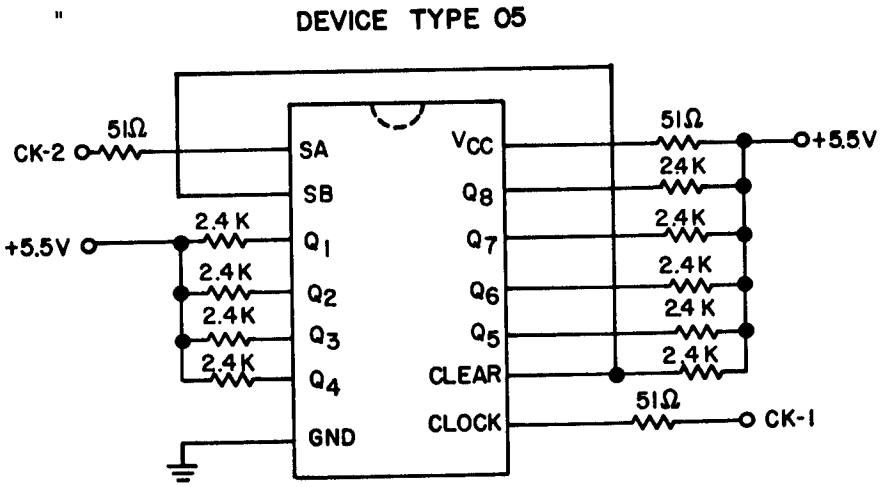

NOTES:
1. CK-1 = 100 kHz, 50% duty cycle.
2. CK-2 = 50 kHz, 50% duty cycle.
3. All resistors ±5%, 1/4 watt.

FIGURE 4. Burn-in and life test circuits - Continued. "

Page 36

FIGURE 10. Switching test circuits and waveforms for device type 05; TEST CIRCUIT; Change: "R_L = 800Ω ±5%" to "R_L = 3.9K ±5%," in upper right hand corner of the figure.

Pages 56, 57, 58, 59, and 60

TABLE III, Group A inspection for device type 05, delete and substitute:

TABLE III. Group A inspection for device type Q5. - Continued
Terminal conditions (pins not designated are open)

Subgroup	Symbol	MIL-STD-883 method	Case A,B,D	5	6	7	8	9	10	11	12	13	14	1	2	3	4	Meas. terminal	Test limits		
			Case C	1	2	3	4	5	6	7	8	9	10	11	12	13	14				
			Test No.	Input serial A	Input serial B	O_A	O_B	O_C	O_D	GND	Clock	Clear	O_E	O_F	O_G	O_H	V_{CC}		Min	Max	Unit
1 T_A = 25°C	V_{OH}	3006	1	2.0 V	2.0 V	-.2 mA				GND	C	4.5 V					4.5 V	O_A	2.4		V
			2				-.2 mA											O_B			
			3					-.2 mA										O_C			
			4						-.2 mA									O_D			
			5										-.2 mA					O_E			
			6											-.2 mA				O_F			
			7												-.2 mA			O_G			
			8													-.2 mA		O_H			
			9	4.5 V	4.5 V	-.2 mA						2.0 V						O_A			
	V_{OL}	3007	10	0.7 V	0.7 V	2 mA						4.5 V						O_A		0.3	
			11				2 mA											O_B			
			12					2 mA										O_C			
			13						2 mA									O_D			
			14										2 mA					O_E			
			15											2 mA				O_F			
			16												2 mA			O_G			
			17													2 mA		O_H			
			18	2.0 V		2 mA												O_A			
			19	0.7 V	2.0 V	2 mA												O_A			
			20	4.5 V	4.5 V	2 mA						0.7 V						O_A			
	I_{IL1}	3009	21	0.3 V	4.5 V												5.5 V	In. ser. A	-0.06	-.18	mA
			22	4.5 V	0.3 V													In. ser. B			
			23								0.3 V							CLK			
	I_{IL2}		24									0.3 V						CLR	-0.12	-.36	
	I_{IH1}	3010	25	2.4 V	GND													In. ser. A		10	μA
			26	GND	2.4 V													In. ser. B			
			27								2.4 V							CLK			
	I_{IH2}		28									2.4 V						CLR		20	
	I_{IH3}		29	5.5 V	GND													In. ser. A		100	
			30	GND	5.5 V													In. ser. B			

See footnotes at end of table.

TABLE III. Group A inspection for device type 05. - Continued
Terminal conditions (pins not designated are open)

Subgroup	Symbol	MIL-STD-883 method	Case A,B,D / Case C / Test no.	5 / 1 / Input Serial A	6 / 2 / Input serial B	7 / 3 / O_A	8 / 4 / O_B	9 / 5 / O_C	10 / 6 / O_D	11 / 7 / GND	12 / 8 / Clock	13 / 9 / Clear	14 / 10 / O_E	1 / 11 / O_F	2 / 12 / O_G	3 / 13 / O_H	4 / 14 / V_{CC}	Meas. terminal	Test limits Min	Test limits Max	Test limits Unit
1 T_A = 25°C	I_{IH3}	3010	31							GND	5.5 V						5.5 V	CLK		100	µA
	I_{IH4}		32									5.5 V						CLR		200	
	I_{OS}	3011	33	4.5 V	4.5 V	GND					A	4.5 V						O_A	-3	-15	mA
			34				GND											O_B			
			35					GND										O_C			
			36						GND									O_D			
			37										GND					O_E			
			38											GND				O_F			
			39												GND			O_G			
			40													GND		O_H			
	I_{CC1}	3005	41	GND	GND						0.3 V	D						V_{CC}		9	
	I_{CC2}	3005	42	GND	GND						2.4 V	D						V_{CC}		9	
2	Same tests, terminal conditions and limits as for subgroup 1, except T_A = 125°C.																				
3	Same tests, terminal conditions and limits as for subgroup 1, except T_A = -55°C.																				
7 2/ T_A = 25°C			43	A 3/	A 3/	L 1/	L 1/	L 1/	L 1/	GND	2.0 V 3/	0.8 V 3/	L 1/	L 1/	L 1/	L 1/	4.5 V	All outputs	H or L as shown 1/		
			44			L	L	L			2.0 V	2.0 V									
			45			L	L	L			0.7 V										
			46			H	L	L			2.0 V										
			47				L	L			0.7 V										
			48				H	L			2.0 V										
			49					L			0.7 V										
			50					H			2.0 V										
			51								0.7 V										
			52						H		2.0 V										
			53								0.7 V										
			54								2.0 V		H								
			55								0.7 V										
			56								2.0 V			H							
			57								0.7 V										
			58								2.0 V				H						
			59								0.7 V										
			60								2.0 V					H					
			61	B							2.0 V										
			62	B							0.7 V										
			63	B		L					2.0 V										

See footnotes at end of table.

TABLE III. Group A inspection for device type 05. - Continued
Terminal conditions (pins not designated are open)

Subgroup	Symbol	MIL-STD-883 method	Case A,B,D / Case C / Test no.	5 / 1 / Input Serial A	6 / 2 / Input Serial B	7 / 3 / O_A	8 / 4 / O_B	9 / 5 / O_C	10 / 6 / O_D	11 / 7 / GND	12 / 8 / Clock	13 / 9 / Clear	14 / 10 / O_E	1 / 11 / O_F	2 / 12 / O_G	3 / 13 / O_H	4 / 14 / V_{CC}	Meas. terminal	Test limits Min	Test limits Max	Test limits Unit
7 2/ T_A = 25°C			64	B	A 3/	L 1/	H 1/	H 1/	H 1/	GND	0.7 V3/	2.0 V3/	H 1/	H 1/	H 1/	H 1/	4.5 V	All outputs	H or L as shown 1/		
			65				L				2.0 V										
			66								0.7 V										
			67					L			2.0 V										
			68					L			0.7 V										
			69					L	L		2.0 V										
			70					L	L		0.7 V										
			71								2.0 V		L								
			72								0.7 V										
			73								2.0 V			L							
			74								0.7 V										
			75								2.0 V				L						
			76								0.7 V										
			77								2.0 V					L					
			78	A							2.0 V										
			79			L					0.7 V										
			80			H					2.0 V										
			81								0.7 V										
			82				H				2.0 V										
			83								0.7 V										
			84					H			2.0 V										
			85								0.7 V										
			86						H		2.0 V										
			87								0.7 V										
			88								2.0 V		H								
			89								0.7 V										
			90								2.0 V			H							
			91								0.7 V										
			92								2.0 V				H						
			93								0.7 V										
			94								2.0 V					H					
			95		B						2.0 V										
			96								0.7 V										
			97			L					2.0 V										
			98								0.7 V										
			99				L				2.0 V										
			100								0.7 V										

See footnotes at end of table.

TABLE III. Group A inspection for device type 05. - Continued
Terminal conditions (pins not designated are open)

Subgroup	Symbol	MIL-STD-883 method	Case A,B,D	5	6	7	8	9	10	11	12	13	14	1	2	3	4	Meas. terminal	Test limits		
			Case C	1	2	3	4	5	6	7	8	9	10	11	12	13	14				
			Test No.	Input serial A	Input serial B	O_A	O_B	O_C	O_D	GND	Clock	Clear	O_E	O_F	O_G	O_H	V_{CC}		Min	Max	Unit
7 2/ T_A = 25°C			101	A	B	L 1/	L 1/	L 1/	H 1/	GND	2.0 V 3/	2.0 V 3/	H 1/	H 1/	H 1/	H 1/	4.5 V	All outputs	H or L as shown 1/		
			102								0.7 V										
			103						L		2.0 V										
			104								0.7 V										
			105								2.0 V		L								
			106								0.7 V										
			107								2.0 V			L							
			108								0.7 V										
			109								2.0 V				L						
			110								0.7 V										
			111								2.0 V					L					
			112		A						2.0 V										
			113								0.7 V										
			114			H					2.0 V										
			115								0.7 V										
			116				H				2.0 V										
			117								0.7 V										
			118					H			2.0 V										
			119								0.7 V										
			120						H		2.0 V										
			121								0.7 V										
			122								2.0 V		H								
			123								0.7 V										
			124								2.0 V			H							
			125								0.7 V										
			126								2.0 V				H						
			127								0.7 V										
			128								2.0 V					H					
			129	B	B						2.0 V										
			130								0.7 V										
			131			L					2.0 V										
			132								0.7 V										
			133				L				2.0 V										
			134				L				0.7 V										
			135				L	L			2.0 V										
			136								0.7 V										
			137						L		2.0 V										

See footnotes at end of table.

TABLE III. Group A inspection for device type 05. - Continued
Terminal conditions (pins not designated are open)

Subgroup	Symbol	MIL-STD-883 method	Case A,B,D / Case C / Test No.	5 / 1 Input serial A	6 / 2 Input serial B	7 / 3 O_A	8 / 4 O_B	9 / 5 O_C	10 / 6 O_D	11 / 7 GND	12 / 8 Clock	13 / 9 Clear	14 / 10 O_E	1 / 11 O_F	2 / 12 O_G	3 / 13 O_H	4 / 14 V_{CC}	Meas. terminal	Test limits Min	Test limits Max	Test limits Unit
7 2/ T_A = 25°C			138	B 3/	B 3/	L 1/	L 1/	L 1/	L 1/	GND	0.7 V	2.0 V3/	H 1/	H 1/	H 1/	H 1/	4.5 V	All outputs	H or L as shown 1/		
			139								2.0 V		L								
			140								0.7 V										
			141								2.0 V			L							
			142								0.7 V										
			143								2.0 V				L						
			144								0.7 V										
			145								2.0 V					L					
			146	A	A						2.0 V										
			147								0.7 V										
			148			H					2.0 V										
			149								0.7 V										
			150				H				2.0 V										
			151								0.7 V										
			152					H			2.0 V										
			153								0.7 V										
			154						H		2.0 V										
			155								0.7 V										
			156								2.0 V		H								
			157								0.7 V										
			158								2.0 V			H							
			159								0.7 V										
			160								2.0 V				H						
			161								0.7 V				H						
			162								2.0 V				H	H					
			163			L	L	L	L		2.0 V	0.8 V	L	L	L	L					
8	Same tests, terminal conditions and limits as for subgroup 7, except T_A = 125°C and -55°C.																				
9 T_A = 25°C	f_{MAX}	(Fig 10)	164	G	G					GND	F	H				OUT	5.0 V	O_H	4		MH_z
	t_{PHL1}	3003 (Fig 10)	165	E, G	E, G	OUT					F	H						CLR to O_A		110	ns
			166				OUT											CLR to O_B			
			167					OUT										CLR to O_C			
			168						OUT									CLR to O_D			
			169										OUT					CLR to O_E			
			170											OUT				CLR to O_F			
			171												OUT			CLR to O_G			

See footnotes at end of table.

TABLE III. Group A inspection for device type 05.-Continued
Terminal conditions (pins not designated are open)

Subgroup	Symbol	MIL-STD-883 method	Case A,B,D / Case C: Test no.	5 / 1: Input serial A	6 / 2: Input serial B	7 / 3: O_A	8 / 4: O_B	9 / 5: O_C	10 / 6: O_D	11 / 7: GND	12 / 8: Clock	13 / 9: Clear	14 / 10: O_E	1 / 11: O_F	2 / 12: O_G	3 / 13: O_H	4 / 14: V_{CC}	Meas. terminal	Test limits Min	Test limits Max	Test limits Unit
9 T_A = 25°C	t_{PHL1}	3003 (Fig 10)	172	E, G	E, G					GND	F	H				OUT	5.0 V	CLR to O_H		110	ns
	t_{PLH2}		173	G	G	OUT												CLK to O_A		80	
			174				OUT											CLK to O_B			
			175					OUT										CLK to O_C			
			176						OUT									CLK to O_D			
			177										OUT					CLK to O_E			
			178											OUT				CLK to O_F			
			179												OUT			CLK to O_G			
			180													OUT		CLK to O_H			
	t_{PHL2}		181			OUT												CLK to O_A		120	
			182				OUT											CLK to O_B			
			183					OUT										CLK to O_C			
			184						OUT									CLK to O_D			
			185										OUT					CLK to O_E			
			186											OUT				CLK to O_F			
			187												OUT			CLK to O_G			
			188													OUT		CLK to O_H			
10 T_A = 125°C	f_{MAX}	(Fig 10)	189	G	G											OUT		O_H	3		MHz
	t_{PHL1}	3003 (Fig 10)	190	E, G	E, G	OUT												CLR to O_A		140	ns
			191				OUT											CLR to O_B			
			192					OUT										CLR to O_C			
			193						OUT									CLR to O_D			
			194										OUT					CLR to O_E			
			195											OUT				CLR to O_F			
			196												OUT			CLR to O_G			
			197													OUT		CLR to O_H			
	t_{PLH2}		198	G	G	OUT												CLK to O_A		120	

See footnotes at end of table.

TABLE III. Group A inspection for device type 05. -Continued
Terminal conditions (pins not designated are open)

Subgroup	Symbol	MIL-STD-883 method	Case A,B,D	5	6	7	8	9	10	11	12	13	14	1	2	3	4	Meas. terminal	Test limits		
			Case C	1	2	3	4	5	6	7	8	9	10	11	12	13	14				
			Test No.	Input serial A	Input serial B	O_A	O_B	O_C	O_D	GND	Clock	Clear	O_E	O_F	O_G	O_H	V_{CC}		Min	Max	Unit
10 T_A = 125°C	t_{PLH2}	3003 (Fig 10)	199	G	G		OUT			GND	F	H					5.0 V	CLK to O_B		120	ns
			200					OUT										CLK to O_C			
			201						OUT									CLK to O_D			
			202										OUT					CLK to O_E			
			203											OUT				CLK to O_F			
			204												OUT			CLK to O_G			
			205													OUT		CLK to O_H			
	t_{PHL2}		206			OUT												CLK to O_A		135	
			207				OUT											CLK to O_B			
			208					OUT										CLK to O_C			
			209						OUT									CLK to O_D			
			210										OUT					CLK to O_E			
			211											OUT				CLK to O_F			
			212												OUT			CLK to O_G			
			213													OUT		CLK to O_H			
11	Same tests, terminal conditions and limits as for subgroup 10, except T_A = -55°C.																				

NOTES: C = Clock pulse (see figure 7).
D = Momentary ground then 4.5 V to clear register before start of test.
E = Outputs are set to high level prior to measurement of t_{PHL} from clear.
F = Input A from figure 7.
G = Input B from figure 7.
H = Input C from figure 7.

1/ Output voltages shall be either (a) H = 2.4 V, minimum and L = 0.4 V. maximum when using a high speed checker double comparator or (b) H $\geq$ 1.5 V and L < 1.5 V when using a high speed checker single comparator.
2/ Only a summary of attributes data is required.
3/ INPUTS: A = 2.0 Volts and B = 0.7 Volt.

Custodians:
Air Force - 17

Review activities:
Air Force - 11, 17, 99, 85
DSA - ES

User activity:
Air Force - 19

Preparing activity:
Air Force - 17

Agent:
DSA - ES

(Project 5962-F214)