MILITARY SPECIFICATION

MICROCIRCUITS, DIGITAL, BIPOLAR, LOW-POWER SCHOTTKY TTL, FLIP-FLOPS, CASCADABLE, MONOLITHIC SILICON

This specification is approved for use by all Departments and Agencies of the Department of Defense.

1. SCOPE

1.1 Scope. This specification covers the requirements for monolithic silicon, low-power Schottky TTL, bistable logic microcircuits. Two product assurance classes and a choice of case outlines and lead finishes are provided and are reflected in the complete part number.

1.2 Part number. The part number shall be in accordance with MIL-M-38510.

1.2.1 Device type. The device type shall be as follows:

Device type	Circuit
06	Hex D type cascadable flip-flop with common clear and common clock
07	Quad D type cascadable flip-flop with common clear and common clock

1.2.2 Device class. The device class shall be the product assurance level as defined in MIL-M-38510.

1.2.3 Case outline. The case outline shall be designated as follows:

Letter	Case outline (see MIL-M-38510, appendix C)
E	D-2 (16-lead, 1/4" x 7/8"), dual-in-line package
F	F-5 (16-lead, 1/4" x 3/8"), flat package
2	C-2 (20-terminal, .350" x .350"), square chip carrier package

1.3 Absolute maximum ratings.

Supply voltage range	-0.5 V dc to +7.0 V dc
Input voltage range	-1.5 V dc at -18 mA to +5.5 V dc
Storage temperature range	-65°C to +150°C
Maximum power dissipation per flip-flop (P_D)	25 mW 1/
Lead temperature (soldering, 10 seconds)	300°C
Thermal resistance, junction to case (θ_{JC}):	
Cases E, F	(see MIL-M-38510, appendix C)
Case 2	0.08°C/mW 2/
Junction temperature (T_J) 3/	+175°C

1/ Must withstand the added P_D due to short circuit condition (e.g., I_{OS}) test.

2/ When a thermal resistance value is included in MIL-M-38510, appendix C, it shall supersede the value stated herein.

3/ Maximum junction temperature shall not be exceeded except for allowable short duration burn-in screening conditions per method 5004 of MIL-STD-883.

Beneficial comments (recommendations, additions, deletions) and any pertinent data which may be of use in improving this document should be addressed to: Rome Air Development Center (RBE-2), Griffiss AFB, NY 13441, by using the self-addressed Standardization Document Improvement Proposal (DD Form 1426) appearing at the end of this document or by letter.

DISTRIBUTION STATEMENT A. Approved for public release; distribution is unlimited.

1.4 Recommended operating conditions.

Supply voltage (V_{CC}) - - - - - - - - - - - -	4.5 V dc minimum to 5.5 V dc maximum
Minimum high-level input voltage (V_{IH}) - -	2.0 V dc
Maximum low-level input voltage (V_{IL}) - -	0.7 V dc
Case operating temperature range (T_C) - -	-55°C to +125°C
Input setup time:	
Device types 06, 07 - - - - - - - - - - - -	20 ns minimum
Input hold time:	
Device types 06, 07 - - - - - - - - - - - -	5 ns minimum

2. APPLICABLE DOCUMENTS

2.1 Government documents.

2.1.1 Specification and standard. The following specification and standard, form a part of this specification to the extent specified herein. Unless otherwise specified, the issues of these documents shall be those listed in the issue of the Department of Defense Index of Specifications and Standards (DODISS) and supplement thereto, cited in the solicitation.

SPECIFICATION

MILITARY

MIL-M-38510 - Microcircuits, General Specification for.

STANDARD

MILITARY

MIL-STD-883 - Test Methods and Procedures for Microelectronics.

(Copies of the specification and standard required by contractors in connection with specific acquisition functions should be obtained from the contracting activity or as directed by the contracting activity.)

2.2 Order of precedence. In the event of a conflict between the text of this specification and the references cited herein (except for associated detail specifications, specification sheets or MS standards), the text of this specification shall take precedence. Nothing in this specification, however shall supersede applicable laws and regulations unless a specific exemption has been obtained.

3. REQUIREMENTS

3.1 Detail specification. The individual item requirements shall be in accordance with MIL-M-38510, and as specified herein.

3.2 Design, construction, and physical dimensions. The design, construction, and physical dimensions shall be as specified in MIL-M-38510 and herein.

3.2.1 Logic diagrams and terminal connections. The logic diagrams and terminal connections shall be as specified on figure 1.

3.2.2 Truth tables. The truth tables shall be as specified on figure 2.

3.2.3 Schematic circuits. Schematic circuits shall be submitted to the preparing activity prior to inclusion of a manufacturer's device in the specification and shall be submitted to the qualifying activity and agent activity (DESC-ECS) as a prerequisite for qualification. All qualified manufacturers' schematics shall be maintained by the agent activity and will be available upon request.

3.2.4 Case outlines. The case outlines shall be as specified in MIL-M-38510 and 1.2.3.

3.3 Lead material and finish. The lead material and finish shall be in accordance with MIL-M-38510 (see 6.4).

3.4 Electrical performance characteristics. Unless otherwise specified, the electrical performance characteristics are specified in table I, and apply over the full recommended case operating temperature range.

TABLE I. Electrical performance characteristics.

Test	Symbol	Conditions 1/ $-55°C \le T_C \le +125°C$	Device type	Limits Min	Limits Max	Unit
High-level output voltage	V_{OH}	V_{CC} = 4.5 V; I_{OH} = -0.4 mA	All	2.5	---	V
Low-level output voltage	V_{OL}	V_{CC} = 4.5 V,	All	---	0.4	V
		I_{OL} = 4 mA,				
		I_{OL} = 8 mA	All	---	0.45	
Input clamp voltage	V_{IC}	V_{CC} = 4.5 V; I_{OL} = -18 mA; T_C = 25°C	All	---	-1.5	V
Low-level input current at D input	I_{IL1}	V_{CC} = 5.5 V; V_{IN} = 0.4 V	All	-75	-400	µA
Low-level input current at CLK	I_{IL2}	V_{CC} = 5.5 V; V_{IN} = 0.4 V	06	-115	-400	µA
			07	-120	-400	
Low-level input current at CLR	I_{IL3}	V_{CC} = 5.5 V; V_{IN} = 0.4 V	06	-115	-380	µA
			07	-100	-360	
High-level input current	I_{IH1}	V_{CC} = 5.5 V; V_{IN} = 2.7 V	All	---	20	µA
	I_{IH2}	V_{CC} = 5.5 V; V_{IN} = 5.5 V	All	---	100	µA
Short-circuit output current	I_{OS}	V_{CC} = 5.5 V; 2/ V_{IN} = 0 V	All	-15	-100	mA
Supply current	I_{CC}	V_{CC} = 5.5 V; V_{IN} = 5 V	06	---	26	mA
			07	---	18	mA
Maximum clock frequency	f_{MAX}	V_{CC} = 5 V; C_L = 50 pF ±10%; R_L = 2 kΩ ±5%	06,07	25	---	MHz
Propagation delay to high logic level (clear to output)	t_{PLH1}		07	5	39	ns
Propagation delay to low logic level (clear to output)	t_{PHL1}		06	5	45	ns
			07	5	45	ns

See footnotes at end of table.

TABLE I. Electrical performance characteristics - Continued.

Test	Symbol	Conditions 1/ $-55°C \leq T_C \leq +125°C$	Device type	Limits Min	Limits Max	Unit
Propagation delay to high logic level (clock to output)	t_{PLH2}	V_{CC} = 5 V; C_L = 50 pF ±10%; R_L = 2kΩ ±5%	06	5	32	ns
			07	5	31	ns
Propagation delay to low logic level (clock to output)	t_{PHL2}		06	5	36	ns
			07	5	33	ns

1/ See table III for complete terminal conditions.

2/ Not more than one output should be shorted at a time.

3.5 Electrical test requirements. The electrical test requirements for each device class shall be the subgroups specified in table II. The electrical tests for each subgroup are described in table III.

3.6 Marking. Marking shall be in accordance with MIL-M-38510.

3.7 Microcircuit group assignment. The devices covered by this specification shall be in microcircuit group number 10 (see MIL-M-38510, appendix E).

TABLE II. Electrical test requirements.

MIL-STD-883 test requirements	Subgroups (see table III) Class S devices	Class B devices
Initial electrical parameters (pre burn-in) (method 5004)	1	1
Final electrical test parameters (method 5004)	1*,2,3,7, 9,10,11	1*,2,3, 7,9
Group A test requirements (method 5005)	1,2,3,7,8, 9,10,11	1,2,3,7, 8,9
Group B test requirements (method 5005), subgroup 5	1,2,3,7,8, 9,10,11	N/A
Group C end-point electrical parameters (method 5005)	N/A	1,2,3
Additional electrical subgroups for group C periodic inspections	N/A	10,11
Group D end-point electrical parameters (method 5005)	1,2,3	1,2,3

*PDA applies to subgroup 1 (see 4.2c).

4. QUALITY ASSURANCE PROVISIONS

4.1 Sampling and inspection. Sampling and inspection procedures shall be in accordance with MIL-M-38510 and methods 5005 and 5007, as applicable, of MIL-STD-883, except as modified herein.

4.2 Screening. Screening shall be in accordance with method 5004 of MIL-STD-883, and shall be conducted on all devices prior to qualification and quality conformance inspection. The following additional criteria shall apply:

a. Burn-in test (method 1015 of MIL-STD-883).

(1) Test condition D or E, using the circuit shown on figure 3, or equivalent.

(2) T_A = +125°C minimum.

b. Initial and final electrical test parameters shall be as specified in table II, except initial electrical parameters test prior to burn-in is optional at the discretion of the manufacturer.

c. The percent defective allowable (PDA) shall be as specified in MIL-M-38510.

4.3 Qualification inspection. Qualification inspection shall be in accordance with MIL-M-38510. Inspections to be performed shall be those specified in method 5005 of MIL-STD-883 and herein for groups A, B, C, and D inspections (see 4.4.1 through 4.4.4).

4.4 Quality conformance inspection. Quality conformance inspection shall be in accordance with MIL-M-38510 and as specified herein. Inspections to be performed shall be those specified in method 5005 of MIL-STD-883 and herein for groups A, B, C, and D inspections (see 4.4.1 through 4.4.4).

4.4.1 Group A inspection. Group A inspection shall be in accordance with table I of method 5005 of MIL-STD-883 and as follows:

a. Tests shall be as specified in table II herein.

b. Subgroups 4, 5, and 6 of table I of method 5005 of MIL-STD-883 shall be omitted.

4.4.2 Group B inspection. Group B inspection shall be in accordance with table II of method 5005 of MIL-STD-883. Electrical parameters shall be as specified in table II herein.

4.4.3 Group C inspection. Group C inspection shall be in accordance with table III of method 5005 of MIL-STD-883 and as follows:

a. End-point electrical parameters shall be as specified in table II herein.

b. Subgroups 3 and 4 shall be added to the group C inspection requirements for class B devices and shall consist of the tests, conditions, and limits specified for subgroups 10 and 11 of group A inspection.

c. Steady-state life test (method 1005 of MIL-STD-883) conditions, or equivalent.

(1) Test condition D or E, using the circuit shown on figure 3, or equivalent.

(2) T_A = +125°C minimum.

(3) Test duration: 1,000 hours, except as permitted by method 5005 of MIL-STD-883.

Device type 06

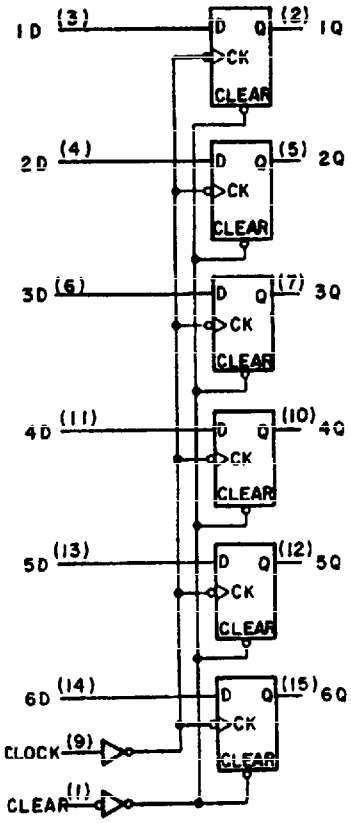

DEVICE TYPE 06

CASES E AND F

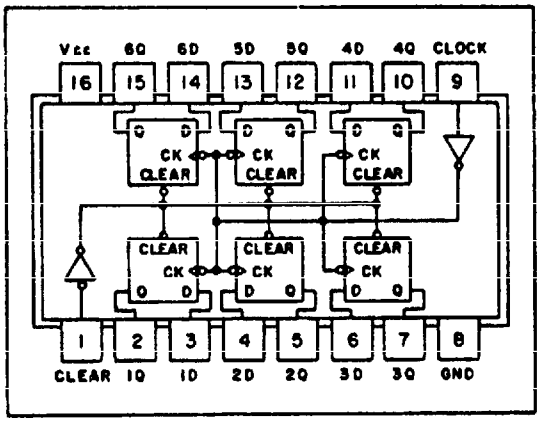

Device type 07

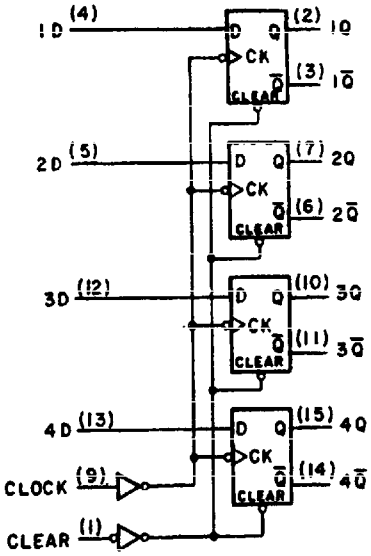

DEVICE TYPE 07

CASES E AND F

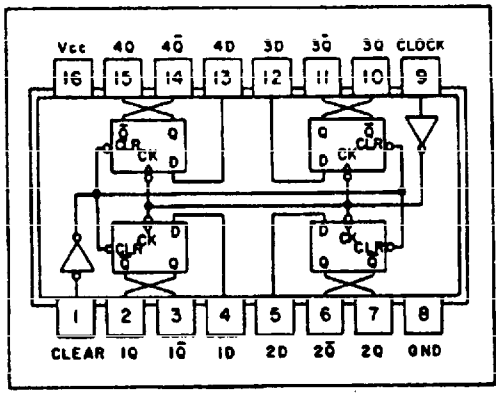

FIGURE 1. Logic diagrams and terminal connections.

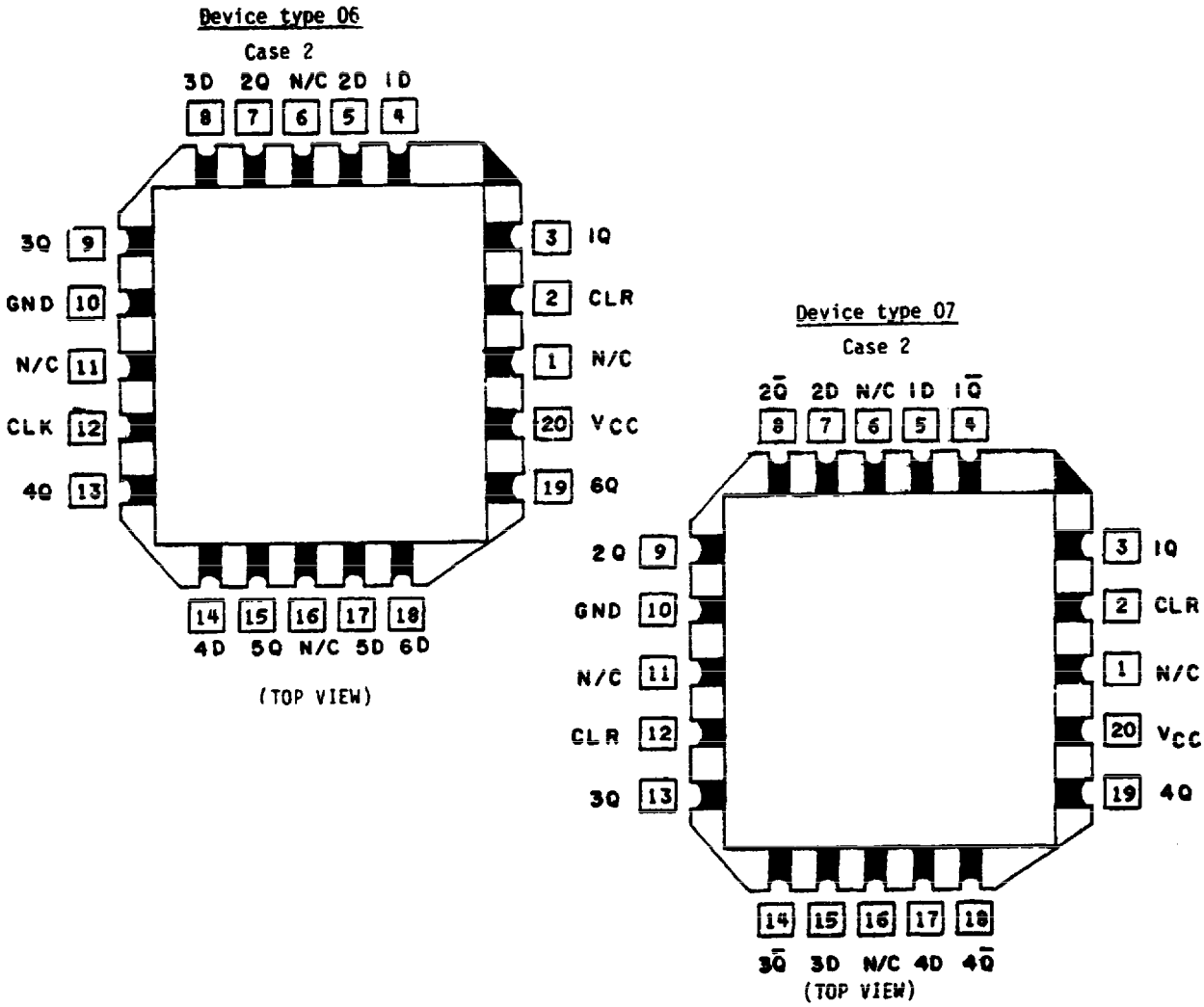

FIGURE 1. Logic diagrams and terminal connections - Continued.

DEVICE TYPE 06

INPUTS			OUTPUT
CLEAR	CLOCK	D	Q
L	X	X	L
H	↑	H	H
H	↑	L	L
H	L	X	Q_0

H = high level (steady state)
L = low level (steady state)
X = irrelevant
↑ = transition from low to high level
Q_0 = the level of Q before the indicated steady state input conditions were established.

DEVICE TYPE 07

INPUTS			OUTPUTS	
CLEAR	CLOCK	D	Q	$\bar{Q}$
L	X	X	L	H
H	↑	H	H	L
H	↑	L	L	H
H	L	X	Q_0	$\bar{Q}_0$

H = high level (steady state)
L = low level (steady state)
X = irrelevant
↑ = transition from low to high level
Q_0 = the level of Q before the indicated steady state input conditions were established.

FIGURE 2. Truth tables.

DEVICE TYPE 06

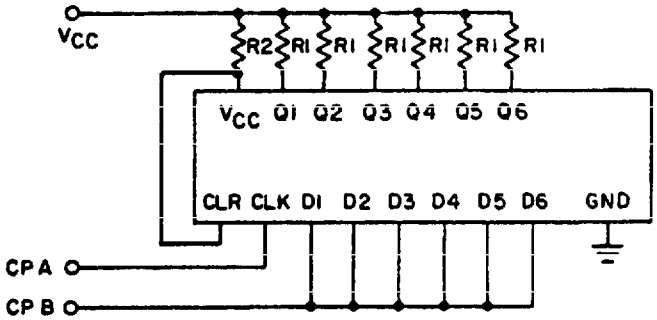

DEVICE TYPE 07

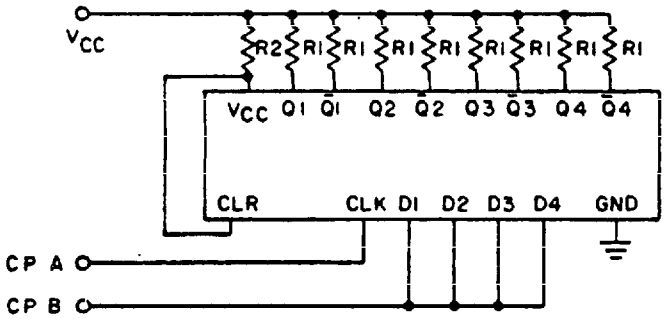

NOTES:

1. CP A = 100 kHz ±50% square wave; duty cycle = 50 ±15%; V_{IL} = -0.5 V minimum to +0.7 V maximum; V_{IH} = 2.0 V minimum to 5.5 V maximum.
   CP B = Same as CP A, synchronized with CP A, except 50 kHz ±50% square wave.
2. R1 = 1 kΩ ±5%; R2 = 27Ω ±5%.
3. V_{CC} shall be high enough to insure that 5.0 V minimum is present at V_{CC} device terminal.

FIGURE 3. Burn-in and life test circuit.

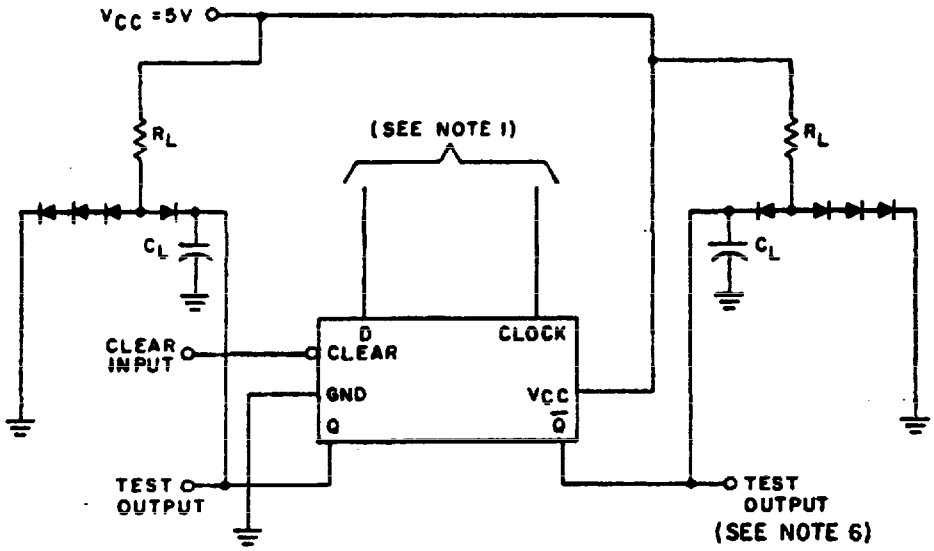

TEST CIRCUIT

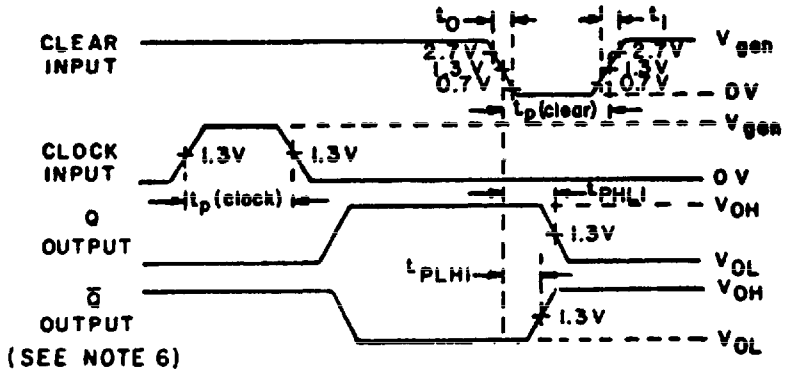

VOLTAGE WAVEFORMS

NOTES:
1. Clear input dominates regardless of the state of clock or D inputs.
2. All diodes are 1N3064, or equivalent.
3. Clear input pulse characteristics: V_{gen} = 3 V, $t_0 \leq$ 6 ns, $t_1 \leq$ 15 ns, t_p (clear) = 35 ns, and PRR $\leq$ 1 MHz.
4. C_L = 50 pF ±10% (including jig and probe capacitance).
5. R_L = 2 kΩ ±5%.
6. $\overline{Q}$ output applies to device type 07 only.
7. Clock input pulse characteristics: t_p (clock) $\geq$ 25 ns, V_{gen} = 3 V; PRR $\leq$ 1 MHz.

FIGURE 4. Asynchronous switching test circuit for device types 06 and 07.

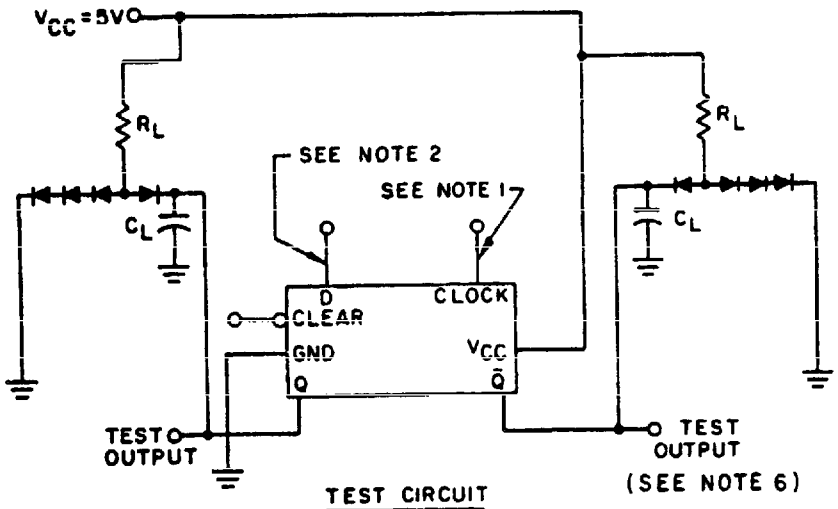

TEST CIRCUIT

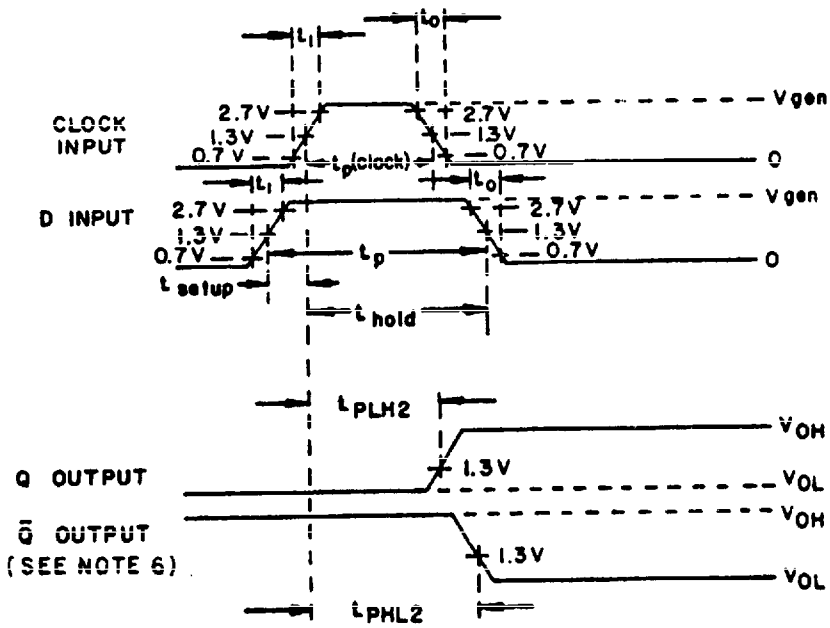

VOLTAGE WAVEFORMS

NOTES:

1. Clock input pulse has the following characteristics: V_{gen} = 3 V, $t_1 \leq 15$ ns, $t_0 \leq 6$ ns, t_p (clock) = 30 ns, and PRR $\leq$ 1 MHz. When testing f_{MAX}, PRR = see table III, t_p (clock) = 20 ns, and $t_0 = t_1 \leq 6$ ns.
2. D input has the following characteristics: V_{gen} = 3 V, $t_1 \leq 15$ ns, $t_0 \leq 6$ ns, t_{setup} = 20 ns, t_{hold} = 5 ns, t_p = 25 ns, and PRR is 50% of the clock PRR. When testing f_{MAX}, $t_0 = t_1 \leq 6$ ns.
3. All diodes are 1N3064, or equivalent.
4. C_L = 50 pF ±10% (including jig and probe capacitance).
5. R_L = 2 kΩ ±5%.
6. $\overline{Q}$ output applies to device type 07 only.

FIGURE 5. Synchronous switching test circuit (high-level data) for device types 06 and 07.

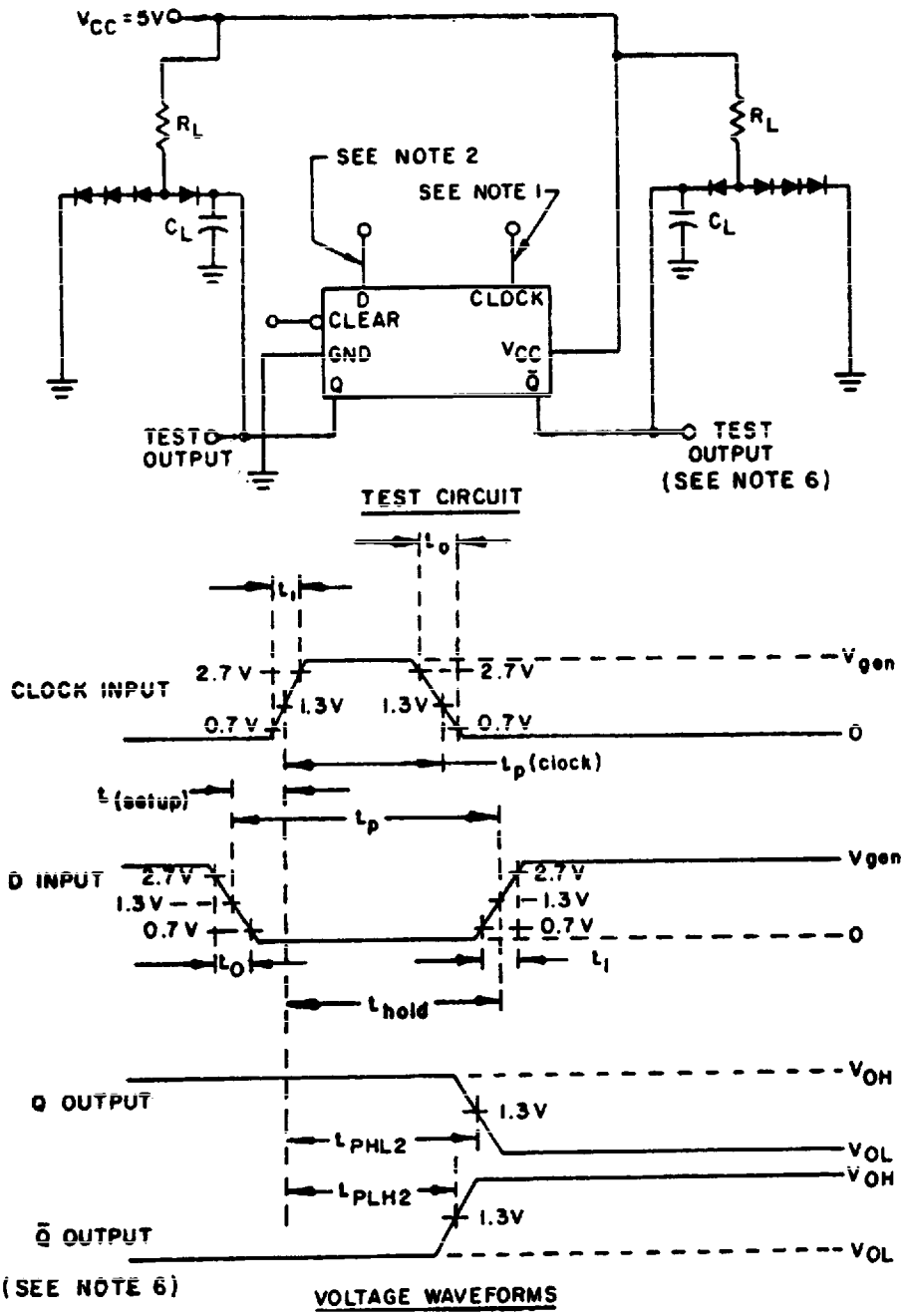

NOTES:

1. Clock input pulse has the following characteristics: V_{gen} = 3 V, $t_1 \leq 15$ ns, $t_0 \leq 6$ ns, t_p (clock) = 30 ns, and PRR $\leq$ 1 MHz.
2. D input has the following characteristics: V_{gen} = 3 V, $t_1 \leq 15$ ns, $t_0 \leq 6$ ns, t_{setup} = 20 ns, t_{hold} = 5 ns, t_p = 25 ns, and PRR is 50% of the clock PRR.
3. All diodes are 1N3064, or equivalent.
4. C_L = 50 pF ±10% (including jig and probe capacitance).
5. R_L = 2 kΩ ±5%.
6. $\overline{Q}$ output applies to device type 07 only.

FIGURE 6. Synchronous switching test circuit (low-level data) for device types 06 and 07.

TABLE III. Group A inspection for device type 06.
Terminal conditions (pins not designated may be high ≥2.0 V, low ≤0.7 V, or open)

Subgroup	Symbol	MIL-STD-883 method	Cases E,F	1	2	3	4	5	6	7	8	9	10	11	12	13	14	15	16	Measured terminal	Test limits Min	Test limits Max	Unit
			Case 2 1/	2	3	4	5	7	8	9	10	12	13	14	15	17	18	19	20				
			Test no.	CLR	Q_1	D_1	D_2	Q_2	D_3	Q_3	GND	CLK	Q_4	D_4	D_5	Q_5	D_6	Q_6	V_{CC}				
1 T_C = 25°C	V_{OH}	3006	1	2.0 V	-0.4 mA	2.0 V					GND	2/							4.5 V	Q_1	2.5 V		V
		"	2	"			2.0 V	-0.4 mA			"	"							"	Q_2	"		"
		"	3	"					2.0 V	-0.4 mA	"	"							"	Q_3	"		"
		"	4	"							"	"	-0.4 mA	2.0 V					"	Q_4	"		"
		"	5	"							"	"			-0.4 mA	2.0 V			"	Q_5	"		"
		"	6	"							"	"					2.0 V	-0.4 mA	"	Q_6	"		"
	V_{OL1}	3007	7	"							"	"					0.7 V	4 mA	"	Q_6		0.4	"
		"	8	"							"	"			4 mA	0.7 V			"	Q_5		"	"
		"	9	"							"	"	4 mA	0.7 V					"	Q_4		"	"
		"	10	"					0.7 V	4 mA	"	"							"	Q_3		"	"
		"	11	"			0.7 V	4 mA			"	"							"	Q_2		"	"
		"	12	"	4 mA	0.7 V					"	"							"	Q_1		"	"
		"	13	0.7 V	4 mA						"								"	Q_1		"	"
		"	14	"				4 mA			"								"	Q_2		"	"
		"	15	"						4 mA	"								"	Q_3		"	"
		"	16	"							"		4 mA						"	Q_4		"	"
		"	17	"							"				4 mA				"	Q_5		"	"
		"	18	"							"							4 mA	"	Q_6		"	"
	V_{OL2}	"	19	2.0 V							"	2/					0.7 V	8 mA	"	Q_6		0.45	"
		"	20	"							"	"			8 mA	0.7 V			"	Q_5		"	"
		"	21	"							"	"	8 mA	0.7 V					"	Q_4		"	"
		"	22	"					0.7 V	8 mA	"	"							"	Q_3		"	"
		"	23	"			0.7 V	8 mA			"	"							"	Q_2		"	"
		"	24	"	8 mA	0.7 V					"	"							"	Q_1		"	"
		"	25	0.7 V	8 mA						"								"	Q_1		"	"
		"	26	"				8 mA			"								"	Q_2		"	"
		"	27	"						8 mA	"								"	Q_3		"	"
		"	28	"							"		8 mA						"	Q_4		"	"
		"	29	"							"				8 mA				"	Q_5		"	"
		"	30	"							"							8 mA	"	Q_6		"	"
	V_{IC}		31	-18 mA							"								"	CLR		-1.5	"
			32			-18 mA					"								"	D_1		"	"
			33				-18 mA				"								"	D_2		"	"
			34						-18 mA		"								"	D_3		"	"
			35								"	-18 mA							"	CLK		"	"
			36								"			-18 mA					"	D_4		"	"
			37								"					-18 mA			"	D_5		"	"
			38								"						-18 mA		"	D_6		"	"
	I_{IL1}	3009	39								"						0.4 V		5.5 V	D_6	8/	8/	
		"	40								"					0.4 V			"	D_5			
		"	41								"				0.4 V				"	D_4			
		"	42						0.4 V		"								"	D_3			
		"	43				0.4 V				"								"	D_2			
		"	44			0.4 V					"								"	D_1			
	I_{IL2}	"	45								"	0.4 V							"	CLK			
	I_{IL3}	"	46	0.4 V							"								"	CLR			

See footnotes at end of device type 06.

TABLE III. Group A inspection for device type 06 - Continued.
Terminal conditions (pins not designated may be high ≥2.0 V, low ≤0.7 V, or open)

Subgroup	Symbol	MIL-STD-883 method	Cases E,F	1	2	3	4	5	6	7	8	9	10	11	12	13	14	15	16	Measured terminal	Test limits Min	Test limits Max	Unit
			Case 2 1/ Test no.	2 CLR	3 Q_1	4 D_1	5 D_2	7 Q_2	8 D_3	9 Q_3	10 GND	12 CLK	13 Q_4	14 D_4	15 Q_5	17 D_5	18 D_6	19 Q_6	20 V_{CC}				
1 T_C = 25°C	I_{IH1}	3010	47	2.7 V							GND								5.5 V	CLR		20	μA
		"	48			2.7 V					"								"	D_1		"	"
		"	49				2.7 V				"								"	D_2		"	"
		"	50						2.7 V		"								"	D_3		"	"
		"	51								"	2.7 V							"	CLK		"	"
		"	52								"			2.7 V					"	D_4		"	"
		"	53								"					2.7 V			"	D_5		"	"
		"	54								"						2.7 V		"	D_6		"	"
	I_{IH2}	"	55								"						5.5 V		"	D_6		100	"
		"	56								"					5.5 V			"	D_5		"	"
		"	57								"			5.5 V					"	D_4		"	"
		"	58								"	5.5 V							"	CLK		"	"
		"	59						5.5 V		"								"	D_3		"	"
		"	60				5.5 V				"								"	D_2		"	"
		"	61			5.5 V					"								"	D_1		"	"
		"	62	5.5 V							"								"	CLR		"	"
	I_{OS}	3011	63	4.5 V	GND	4.5 V					"	3/							"	Q_1	-15	-100	mA
		"	64	"			4.5 V	GND			"								"	Q_2	"	"	"
		"	65	"					4.5 V	GND	"								"	Q_3	"	"	"
		"	66	"							"		GND	4.5 V					"	Q_4	"	"	"
		"	67	"							"				GND	4.5 V			"	Q_5	"	"	"
		"	68	"							"						4.5 V	GND	"	Q_6	"	"	"
	I_{CC}	3005	69	5.5 V		5.5 V	5.5 V		5.5 V		"	3/		5.5 V		5.5 V	5.5 V		"	V_{CC}		26	"
2	Same tests, terminal conditions, and limits as subgroup 1, except T_C = 125°C and V_{IC} tests are omitted.																						
3	Same tests, terminal conditions, and limits as subgroup 1, except T_C = -55°C and V_{IC} tests are omitted.																						
7 4/ 5/ T_C = 25°C	Truth table test	3014	70	B	L	A	A	L	A	L	GND	A	L	A	L	A	A	L	4.5 V	All outputs	Limits 6/		
		"	71	B	"	"	"	"	"	"	"	B	"	"	"	"	"	"	"	"				
		"	72	B	"	"	"	"	"	"	"	A	"	"	"	"	"	"	"	"				
		"	73	A	"	"	"	"	"	"	"	A	"	"	"	"	"	"	"	"				
		"	74	"	"	"	"	"	"	"	"	B	"	"	"	"	"	"	"	"				
		"	75	"	H	"	"	H	"	H	"	A	H	"	H	"	"	H	"	"				
		"	76	"	H	B	B	H	B	H	"	A	H	B	H	B	B	H	"	"				
		"	77	"	H	B	B	H	B	H	"	B	H	B	H	B	B	H	"	"				
		"	78	"	L	B	B	L	B	L	"	A	L	B	L	B	B	L	"	"				
		"	79	"	L	A	A	L	A	L	"	B	L	A	L	A	A	L	"	"				
		"	80	"	H	"	"	H	"	H	"	A	H	"	H	"	"	H	"	"				
		"	81	"	H	"	"	H	"	H	"	B	H	"	H	"	"	H	"	"				
		"	82	B	L	"	"	L	"	L	"	B	L	"	L	"	"	L	"	"				
8 4/ 5/ Repeat subgroup 7 at T_C = 125°C and T_C = -55°C.																							
9 T_C = 25°C	f_{MAX} 7/	Fig. 5	83	2.7 V	OUT	IN					GND	IN							5.0 V	Q_1	25		MHz
		"	84	"			IN	OUT			"	"							"	Q_2	"		"
		"	85	"					IN	OUT	"	"							"	Q_3	"		"
		"	86	"							"	"	OUT	IN					"	Q_4	"		"
		"	87	"							"	"			OUT	IN			"	Q_5	"		"
		"	88	"							"	"					IN	OUT	"	Q_6	"		"

See footnotes at end of device type 06.

TABLE III. Group A inspection for device type 06 - Continued.
Terminal conditions (pins not designated may be high ≥2.0 V, low ≤0.7 V, or open)

Subgroup	Symbol	MIL-STD-883 method	Cases E,F	1	2	3	4	5	6	7	8	9	10	11	12	13	14	15	16	Measured terminal	Test limits Min	Test limits Max	Unit
			Case 2 1/	2	3	4	5	7	8	9	10	12	13	14	15	17	18	19	20				
			Test no.	CLR	Q_1	D_1	D_2	Q_2	D_3	Q_3	GND	CLK	Q_4	D_4	Q_5	D_5	D_6	Q_6	V_{CC}				
9 T_C = 25°C	t_{PHL1}	3003 Fig. 4	89	IN							GND	IN					2.7 V	OUT	5.0 V	CLR to Q_6	5	37	ns
			90	"							"	"			OUT	2.7 V			"	CLR to Q_5	"	"	"
			91	"							"	"	OUT	2.7 V					"	CLR to Q_4	"	"	"
			92	"					2.7 V	OUT	"	"							"	CLR to Q_3	"	"	"
			93	"			2.7 V	OUT			"	"							"	CLR to Q_2	"	"	"
			94	"	OUT	2.7 V					"	"							"	CLR to Q_1	"	"	"
	t_{PLH2}	3003 Fig. 5	95	2.7 V	OUT	IN					"	"							"	CLK to Q_1	"	25	"
			96	"			IN	OUT			"	"							"	CLK to Q_2	"	"	"
			97	"					IN	OUT	"	"							"	CLK to Q_3	"	"	"
			98	"							"	"	OUT	IN					"	CLK to Q_4	"	"	"
			99	"							"	"			OUT	IN			"	CLK to Q_5	"	"	"
			100	"							"	"					IN	OUT	"	CLK to Q_6	"	"	"
	t_{PHL2}	3003 Fig. 6	101	"							"	"					IN	OUT	"	CLK to Q_6	"	27	"
			102	"							"	"			OUT	IN			"	CLK to Q_5	"	"	"
			103	"							"	"	OUT	IN					"	CLK to Q_4	"	"	"
			104	"					IN	OUT	"	"							"	CLK to Q_3	"	"	"
			105	"			IN	OUT			"	"							"	CLK to Q_2	"	"	"
			106	"	OUT	IN					"	"							"	CLK to Q_1	"	"	"
10	Same tests and terminal conditions as for subgroup 9, except T_C = 125°C and for the following limits: t_{PHL1} = 5 to 45 ns; t_{PLH2} = 5 to 32 ns; t_{PHL2} = 5 to 36 ns.																						
11	Same tests, terminal conditions, and limits as for subgroup 10, except T_C = -55°C.																						

NOTES:

1/ Case 2 pins not referenced are N/C.

2/ 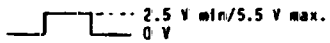

3/ 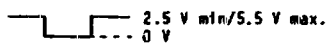

4/ Input voltages shown are: A = 2.4 V minimum and B = 0.4 V maximum.

5/ Tests shall be performed in sequence; attributes data only.

6/ Output voltage shall be H ≥1.5 V and L <1.5 V.

7/ f_{MAX}, minimum limit specified is the frequency of the input pulse. The output frequency shall be one-half of the input frequency.

8/ I_{IL} limits (uA) min/max values for circuits shown:

Parameter	A	B
I_{IL1}	-85/-270	-75/-320
I_{IL2}	-115/-350	-120/-360
I_{IL3}	-115/-350	-120/-360

TABLE III. Group A inspection for device type 07.
Terminal conditions (pins not designated may be high ≥2.0 V, low ≤0.7 V, or open)

Subgroup	Symbol	MIL-STD-883 method	Cases E,F	1	2	3	4	5	6	7	8	9	10	11	12	13	14	15	16	Measured terminal	Test limits Min	Test limits Max	Unit
			Case 2 1/	2	3	4	5	7	8	9	10	12	13	14	15	17	18	19	20				
			Test no.	CLR	Q_1	$\bar{Q}_1$	D_1	D_2	$\bar{Q}_2$	Q_2	GND	CLK	Q_3	$\bar{Q}_3$	D_3	D_4	$\bar{Q}_4$	Q_4	V_{CC}				
T_C 1/ = 25°C	V_{OH}	3006	1	0.7 V		-0.4 mA					GND								4.5 V	$\bar{Q}_1$	2.5 V		V
		"	2	"					-0.4 mA		"								"	Q_1	"		"
		"	3	"							"			-0.4 mA					"	Q_2	"		"
		"	4	"							"						-0.4 mA		"	$\bar{Q}_2$	"		"
		"	5	2.0 V							"	2/				2.0 V		-0.4 mA	"	Q_4	"		"
		"	6	"							"	"	-0.4 mA		2.0 V				"	Q_3	"		"
		"	7	"				2.0 V		-0.4 mA	"	"							"	Q_2	"		"
		"	8	"	-0.4 mA		2.0 V				"	"							"	Q_1	"		"
		"	9	"		-0.4 mA	0.7 V				"	"							"	$\bar{Q}_1$	"		"
		"	10	"				0.7 V	-0.4 mA		"	"							"	$\bar{Q}_2$	"		"
		"	11	"							"	"		-0.4 mA	0.7 V				"	$\bar{Q}_3$	"		"
		"	12	"							"	"				0.7 V	-0.4 mA		"	$\bar{Q}_4$	"		"
	V_{OL1}	3007	13	0.7 V	4 mA						"								"	Q_1		0.4	"
		"	14	"						4 mA	"								"	Q_2		"	"
		"	15	"							"		4 mA						"	Q_3		"	"
		"	16	"							"							4 mA	"	Q_4		"	"
		"	17	2.0 V							"	2/				2.0 V	4 mA		"	$\bar{Q}_4$		"	"
		"	18	"							"	"		4 mA	2.0 V				"	$\bar{Q}_3$		"	"
		"	19	"				2.0 V	4 mA		"	"							"	$\bar{Q}_2$		"	"
		"	20	"		8 mA	2.0 V				"	"							"	$\bar{Q}_1$		"	"
		"	21	"	4 mA		0.7 V				"	"							"	Q_1		"	"
		"	22	"				0.7 V		4 mA	"	"							"	Q_2		"	"
		"	23	"							"	"	4 mA		0.7 V				"	Q_3		"	"
		"	24	"							"	"				0.7 V		4 mA	"	Q_4		"	"
	V_{OL2}	"	25	0.7 V	8 mA						"								"	Q_1		0.45	"
		"	26	"						8 mA	"								"	Q_2		"	"
		"	27	"							"		8 mA						"	Q_3		"	"
		"	28	"							"							8 mA	"	Q_4		"	"
		"	29	2.0 V							"	2/				2.0 V	8 mA		"	$\bar{Q}_4$		"	"
		"	30	"							"	"		8 mA	2.0 V				"	$\bar{Q}_3$		"	"
		"	31	"				2.0 V	8 mA		"	"							"	$\bar{Q}_2$		"	"
		"	32	"		8 mA	2.0 V				"	"							"	$\bar{Q}_1$		"	"
		"	33	"	8 mA		0.7 V				"	"							"	Q_1		"	"
		"	34	"				0.7 V		8 mA	"	"							"	Q_2		"	"
		"	35	"							"	"	8 mA		0.7 V				"	Q_3		"	"
		"	36	"							"	"				0.7 V		8 mA	"	Q_4		"	"
	V_{IC}		37	-18 mA							"								"	CLR		-1.5	"
			38				-18 mA				"								"	D_1		"	"
			39					-18 mA			"								"	D_2		"	"
			40								"	-18 mA							"	CLK		"	"
			41								"				-18 mA				"	D_3		"	"
			42								"					-18 mA			"	D_4		"	"
	I_{IL1}	3009	43								"					0.4 V			5.5 V	D_4	-75	-320	μA
		"	44								"				0.4 V				"	D_3	"	"	"
		"	45					0.4 V			"								"	D_2	"	"	"
		"	46				0.4 V				"								"	D_1	"	"	"
	I_{IL2}	"	47								"	0.4 V							"	CLK	8/	8/	"
	I_{IL3}	"	48	0.4 V							"	"							"	CLR			"

See footnotes at end of device type 07.

TABLE III. Group A inspection for device type 07 - Continued.
Terminal conditions (pins not designated may be high ≥2.0 V, low ≤0.7 V, or open)

Subgroup	Symbol	MIL-STD-883 method	Cases E,F	1	2	3	4	5	6	7	8	9	10	11	12	13	14	15	16	Measured terminal	Test limits Min	Test limits Max	Unit
			Case 2 1/	2	3	4	5	7	8	9	10	12	13	14	15	17	18	19	20				
			Test no.	CLR	Q_1	$\bar{Q}_1$	D_1	D_2	$\bar{Q}_2$	Q_2	GND	CLK	Q_3	$\bar{Q}_3$	D_3	D_4	$\bar{Q}_4$	Q_4	V_{CC}				
1 T_C = 25°C	I_{IH1}	3010	49	2.7 V							GND								5.5 V	CLR		20	μA
		"	50				2.7 V				"								"	D_1		"	"
		"	51					2.7 V			"								"	D_2		"	"
		"	52								"	2.7 V							"	CLK		"	"
		"	53								"				2.7 V				"	D_3		"	"
		"	54								"					2.7 V			"	D_4		"	"
	I_{IH2}	"	55	5.5 V							"								"	CLK		100	"
		"	56				5.5 V				"								"	D_1		"	"
		"	57					5.5 V			"								"	D_2		"	"
		"	58								"	5.5 V							"	CLK		"	"
		"	59								"				5.5 V				"	D_3		"	"
		"	60								"					5.5 V			"	D_4		"	"
	I_{OS}	3011	61	GND		GND					"								"	$\bar{Q}_1$	-15	-100	mA
		"	62	"					GND		"								"	$\bar{Q}_2$	"	"	"
		"	63	"							"			GND					"	$\bar{Q}_3$	"	"	"
		"	64	"							"						GND		"	$\bar{Q}_4$	"	"	"
		"	65	4.5 V							"	3/				4.5 V		GND	"	Q_4	"	"	"
		"	66	"							"	3/	GND		4.5 V				"	Q_3	"	"	"
		"	67	"				4.5 V		GND	"	3/							"	Q_2	"	"	"
		"	68	"	GND		4.5 V				"	3/							"	Q_1	"	"	"
	I_{CC}	3005	69	5.5 V			5.5 V	5.5 V			"				5.5 V	5.5 V			"	V_{CC}		18	"
2	Same tests, terminal conditions, and limits as subgroup 1, except T_C = 125°C and V_{IC} tests are omitted.																						
3	Same tests, terminal conditions, and limits as subgroup 1, except T_C = -55°C and V_{IC} tests are omitted.																						
7 4/ 5/ T_C = 25°C	Truth table test	3014	70	B	L	H	A	A	H	L	GND	B	H	H	A	A	H	L	4.5 V	All outputs	Limits 6/		
		"	71	B	L	H	"	"	H	L	"	A	L	H	"	"	H	L	"	"			
		"	72	B	L	H	"	"	H	L	"	B	L	H	"	"	H	L	"	"			
		"	73	A	L	H	"	"	H	L	"	B	L	H	"	"	H	L	"	"			
		"	74	"	H	L	"	"	L	H	"	A	H	L	"	"	L	H	"	"			
		"	75	"	H	L	"	"	L	H	"	B	H	L	"	"	L	H	"	"			
		"	76	"	H	L	B	B	L	H	"	B	H	L	B	B	L	H	"	"			
		"	77	"	L	H	B	B	H	L	"	A	L	H	B	B	H	L	"	"			
		"	78	"	L	H	B	B	H	L	"	B	L	H	B	B	H	L	"	"			
		"	79	"	L	H	A	A	H	L	"	B	L	H	A	A	H	L	"	"			
		"	80	"	H	L	A	A	L	H	"	A	H	L	A	A	L	H	"	"			
		"	81	"	H	L	A	A	L	H	"	B	H	L	A	A	L	H	"	"			
		"	82	B	L	H	A	A	H	L	"	B	L	H	A	A	H	L	"	"			
8 4/ 5/ Repeat subgroup 7 at T_C = 125°C and T_C = -55°C.																							
9 T_C = 25°C	f_{MAX}	Fig. 5	83	2.7 V	OUT		IN				GND	IN							5.0 V	Q_1	25		MHz
		"	84	"		OUT	IN				"	"							"	$\bar{Q}_1$	"		"
		"	85	"				IN	OUT		"	"							"	$\bar{Q}_2$	"		"
		"	86	"				IN		OUT	"	"							"	Q_2	"		"
		"	87	"							"	"	OUT		IN				"	$\bar{Q}_3$	"		"
		"	88	"							"	"		OUT	IN				"	Q_3	"		"
		"	89	"							"	"				IN	OUT		"	$\bar{Q}_4$	"		"
		"	90	"							"	"				IN		OUT	"	Q_4	"		"

See footnotes at end of device type 07.

TABLE III. Group A inspection for device type 07 - Continued.
Terminal conditions (pins not designated may be high ≥2.0 V, low ≤0.7 V, or open)

Subgroup	Symbol	MIL-STD-883 method	Cases E,F	1	2	3	4	5	6	7	8	9	10	11	12	13	14	15	16	Measured terminal	Test limits Min	Test limits Max	Unit
			Case 2 1/	2	3	4	5	7	8	9	10	12	13	14	15	17	18	19	20				
			Test no.	CLR	Q_1	$\bar{Q}_1$	D_1	D_2	$\bar{Q}_2$	Q_2	GND	CLK	Q_3	$\bar{Q}_3$	D_3	D_4	$\bar{Q}_4$	Q_4	V_{CC}				
9 T_C = 25°C	t_{PLH1}	3003 Fig. 4	91	IN							GND	IN				2.7 V	OUT		5.0 V	CLR to $\bar{Q}_4$	5	30	ns
			92	"							"	"		OUT	2.7 V				"	CLR to $\bar{Q}_1$	"	"	"
			93	"				2.7 V	OUT		"	"							"	CLR to $\bar{Q}_2$	"	"	"
			94	"		OUT	2.7 V				"	"							"	CLR to $\bar{Q}_1$	"	"	"
	t_{PHL1}	"	95	"	OUT		2.7 V				"	"							"	CLR to Q_1	"	35	"
		"	96	"				2.7 V		OUT	"	"							"	CLR to Q_2	"	"	"
		"	97	"							"	"	OUT		2.7 V				"	CLR to Q_3	"	"	"
		"	98	"							"	"				2.7 V		OUT	"	CLR to Q_4	"	"	"
	t_{PLH2}	3003 Fig. 5	99	2.7 V							"	"				IN		OUT	"	CLR to Q_4	"	25	"
			99	"							"	"	OUT		IN				"	CLR to Q_3	"	"	"
			101	"				IN		OUT	"	"							"	CLR to Q_2	"	"	"
		"	102	"	OUT		IN				"	"							"	CLR to Q_1	"	"	"
		3003 Fig. 6	103	"		OUT	IN				"	"							"	CLR to $\bar{Q}_1$	"	25	"
			104	"				IN	OUT		"	"							"	CLR to $\bar{Q}_2$	"	"	"
			105	"							"	"		OUT	IN				"	CLR to $\bar{Q}_3$	"	"	"
		"	106	"							"	"				IN	OUT		"	CLR to $\bar{Q}_4$	"	"	"
	t_{PHL2}	3003 Fig. 5	107	"							"	"				IN	OUT		"	CLR to $\bar{Q}_4$	"	26	"
			108	"							"	"		OUT	IN				"	CLR to $\bar{Q}_3$	"	"	"
			109	"				IN	OUT		"	"							"	CLR to $\bar{Q}_2$	"	"	"
		"	110	"		OUT	IN				"	"							"	CLR to $\bar{Q}_1$	"	"	"
	t_{PHL2}	3003 Fig. 6	111	"	OUT		IN				"	"							"	CLR to Q_1	"	"	"
			112	"				IN		OUT	"	"							"	CLR to Q_2	"	"	"
			113	"							"	"	OUT		IN				"	CLR to Q_3	"	"	"
		"	114	"							"	"				IN		OUT	"	CLR to Q_4	"	"	"
10	Same tests and terminal conditions as for subgroup 9, except T_C = 125°C and the following limits: t_{PLH1} = 5 to 39 ns; t_{PHL1} = 5 to 45 ns; t_{PLH2} = 5 to 31 ns; t_{PHL2} = 5 to 33 ns.																						
11	Same tests, terminal conditions, and limits as for subgroup 10, except T_C = -55°C.																						

NOTES:

1/ Case 2 pins not referenced are N/C.

2/ 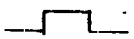 2.5 V min/5.5 V max. 0 V

3/ 2.5 V min/5.5 V max. 0 V

4/ Input voltages shown are: A = 2.4 V minimum and B = 0.4 V maximum.

5/ Tests shall be performed in sequence; attributes data only.

6/ Output voltage shall be H ≥1.5 V and L ≤1.5 V.

7/ f_{MAX}, minimum limit specified is the frequency of the input pulse. The output frequency shall be one-half of the input frequency.

8/ I_{IL} limits (μA) min/max values for circuits shown:

Parameter	A	B
I_{IL2}	-735/-400	-120/-360
I_{IL3}	-85/-340	-120/-360

4.4.4 Group D inspection. Group D inspection shall be in accordance with table IV of method 5005 of MIL-STD-883. End-point electrical parameters shall be as specified in table II herein.

4.5 Methods of inspection. Methods of inspection shall be as follows:

4.5.1 Voltage and current. All voltages given are referenced to the microcircuit ground terminal. Currents given are conventional and positive when flowing into the referenced terminal.

4.6 Inclusion with other detail specifications. For qualification and quality conformance inspection purposes, devices covered by this specification may be treated as though they were included on the same detail specifications as devices covered by MIL-M-38510/301. In addition, if a manufacturer is already part I qualified for types 30106 and 30107, and if the respective devices on this specification MIL-M-38510/331 are designed and manufactured identically (same die, same process, same screening) in all respects except electrical testing, then device types 33106 and 33107 may be part I qualified by conducting only group A electrical tests and submitting data in accordance with MIL-M-38510, appendix D (i.e groups B, C, and D tests are not required).

5. PACKAGING

5.1 Packaging requirements. The requirements for packaging shall be in accordance with MIL-M-38510.

6. NOTES

6.1 Intended use. Microcircuits conforming to this specification are intended for original equipment design applications and logistic support of existing equipment.

6.2 Ordering data. The contract or purchase order should specify the following:

a. Complete part number (see 1.2).

b. Requirements for delivery of one copy of the quality conformance inspection data pertinent to the device inspection lot to be supplied with each shipment by the device manufacturer, if applicable.

c. Requirements for certificate of compliance, if applicable.

d. Requirements for notification of change of product or process to the contracting activity in addition to notification to the qualifying activity, if applicable.

e. Requirements for failure analysis (including required test condition of method 5003 of MIL-STD-883), corrective action, and reporting of results, if applicable.

f. Requirements for product assurance options.

g. Requirements for special carriers, lead lengths, or lead forming, if applicable. Unless otherwise specified, these requirements will not apply to direct purchase by or direct shipment to the Government.

h. Requirements for "JAN" marking.

6.3 Abbreviations, symbols, and definitions. The abbreviations, symbols, and definitions used herein are defined in MIL-M-38510, MIL-STD-1331, and as follows:

V_{IN} - - - - - - - - - - - - - - - Voltage level at input terminal
V_{IC} - - - - - - - - - - - - - - - Input clamp voltage
I_{IN} - - - - - - - - - - - - - - - Current flowing into an input terminal
GND - - - - - - - - - - - - - - - Ground zero voltage potential

6.4 Logistic support. Lead materials and finishes (see 3.3) are interchangeable. Unless otherwise specified, microcircuits acquired for Government logistic support will be acquired to device class B (see 1.2.2) and lead finish C (see 3.3). Longer lengths and lead forming shall not affect the part number.

6.5 Substitutability. The cross-reference information below is presented for the convenience of users. Microcircuits covered by this specification will functionally replace the listed generic-industry type. Generic-industry microcircuit types may not have equivalent operational performance characteristics across military temperature ranges or reliability factors equivalent to MIL-M-35810 device types and may have slight physical variations in relation to case size. The presence of this information shall not be deemed as permitting substitution of generic-industry types for MIL-M-35810 types or as a waiver of any of the provisions of MIL-M-38510.

Military device type	Generic-industry type
06	25LS174
07	25LS175

6.6 Manufacturers' designation. Manufacturers' circuits which form a part of this specification are designated with an 'X' as shown in table IV herein.

TABLE IV. Manufacturers' designations.

Device type	Manufacturer		
	A Texas Instrument	B Advanced Micro Devices	C Motorola Incorporated
06	X		X
07	X		X

6.7 Changes from previous issue. Asterisks are not used in this revision to identify changes with respect to the previous issue, due to the extensiveness of the changes.

Custodians:
Army - ER
Navy - EC
Air Force - 17

Review activities:
Army - AR, MI
Navy - OS, SH, TD
Air Force - 11, 19, 85, 99
DLA - ES

User activities:
Army - SM
Navy - AS, CG, MC

Agent:
DLA - ES

Preparing activity:
Air Force - 17

Agent:
DLA - ES

(Project 5962-0831)