MILITARY SPECIFICATION

MICROCIRCUITS, DIGITAL, ADVANCED LOW POWER SCHOTTKY TTL,

SHIFT REGISTERS, MONOLITHIC SILICON

This specification is approved for use by the Department of the Air Force, and is available for use by all Departments and Agencies of the Department of Defense.

1. SCOPE

1.1 Scope. This specification covers the requirements for monolithic silicon Advanced Low Power Schottky TTL, shift register microcircuits. Two product assurance classes and a choice of case outline/lead finish are provided for each type and are reflected in the complete part number.

1.2 Part number. The part number shall be in accordance with MIL-M-38510.

1.2.1 Device type. The device type shall be as follows:

Device type	Circuit
01	8-bit bi-directional universal shift/storage register with 3-state outputs
02	8-bit bi-directional universal shift/storage register with 3-state outputs

1.2.2 Device class. The device class shall be the product assurance level as defined in MIL-M-38510.

1.2.3 Case outline. The case outline shall be designated as follows:

Letter	Case outline (see MIL-M-38510, appendix C)
R	D-8 (20-lead, 1/4" x 1 1/16"), dual-in-line package
S	F-9 (20-lead, 1/4" x 1/2"), flat package
2	C-2 (20-terminal, .350" x .350"), square chip carrier.

1.3 Absolute maximum ratings.

Supply voltage range - - - - - - - - - - - - - - - -0.5 V dc to +7.0 V dc
Input voltage range- - - - - - - - - - - - - - - - -1.5 V dc at -18 mA to +7.0 V dc
Storage temperature- - - - - - - - - - - - - - - - -65°C to +150°C
Maximum power dissipation (P_D) per device 1/:
  Device types 01 and 02 - - - - - - - - - - - - - 220 mW
Lead temperature (soldering, 10 seconds) - - - - +300°C
Thermal resistance, junction-to-case ($R_{\theta JC}$):
  Cases R and S- - - - - - - - - - - - - - - - - - 40°C/mW
  Case 2 - 60°C/mW
Junction temperature (T_J)- - - - - - - - - - - +175°C

1/ Must withstand the added P_D due to short circuit test (e.g., I_O).

Beneficial comments (recommendations, additions, deletions) and any pertinent data which may be of use in improving this document should be addressed to: Rome Air Development Center (RBE-2), Griffiss AFB, NY 13441, by using the self-addressed Standardization Document Improvement Proposal (DD Form 1426) appearing at the end of this document or by letter.

1.4 Recommended operating conditions.

Supply voltage	4.5 V dc minimum to 5.5 V dc maximum
Minimum high level input voltage (V_{IH})	2.0 V dc
Maximum low level input voltage (V_{IL})	0.8 V dc
Case operating temperature range	-55°C to +125°C
Minimum clock pulse width:	
Device types 01 and 02:	
Cases	20 ns at +125°C/-55°C
Device types 01, 02:	
Cases	16.5 ns at 25°C
Minimum clear pulse width:	
Device type 01	10 ns
Minimum clear inactive state pulse width:	
Device type 01	15 ns
Minimum clear pulse data setup time:	
Device type 02:	
Low (active)	25 ns
High (in-active)	18 ns
Minimum setup time at select (S0, S1):	
Device types 01, 02	25 ns
Minimum setup time:	
High level data (SL, SR, A - H)	
Device types 01, 02	18 ns
Low level data (SL, SR, A - H):	
Device types 01, 02	7 ns
Minimum hold time (S0, S1, SL, SR, A - H):	
Device types 01, 02	0 ns

2. APPLICABLE DOCUMENTS

2.1 Government specifications and standards. Unless otherwise specified, the following specifications and standards, of the issue listed in that issue of the Department of Defense Index of Specifications and Standards specified in the solicitation, form a part of this specification to the extent specified herein.

SPECIFICATION

MILITARY

MIL-M-38510 - Microcircuits, General Specification for.

STANDARD

MILITARY

MIL-STD-883 - Test Methods and Procedures for Microelectronics.

(Copies of specifications, standards, handbooks, drawings, and publications required by manufacturers in connection with specific acquisition functions should be obtained from the contracting activity or as directed by the contracting officer.)

2.2 Order of precedence. In the event of a conflict between the text of this specification and the references cited herein, the text of this specification shall take precedence.

3. REQUIREMENTS

3.1 Detail specification. The individual item requirements shall be in accordance with MIL-M-38510, and as specified herein.

3.2 Design, construction, and physical dimensions. The design, construction, and physical dimensions shall be as specified in MIL-M-38510 and herein.

3.2.1 Terminal connections. The terminal connections shall be as specified on figure 1.

TABLE I. Electrical performance characteristics.

Test	Symbol	Conditions $-55°C \le T_C \le +125°C$		Device type	Limits Min	Limits Max	Unit
High-level output voltage (Q outputs)	V_{OH1}	V_{CC} = 4.5 V V_{IH} = 2.0 V	I_{OH} = -1.0 mA	All	2.4	---	V
High-level output voltage (All other outputs)	V_{OH2}	V_{CC} = 4.5 V V_{IN} = 2.0 V	I_{OH} = -400 mA	All	2.5	---	V
Low-level output voltage (QA-QH)	V_{OL1}	V_{CC} = 4.5 V V_{IN} = 0.8 V	I_{OL} = 12 mA	All	---	0.4	V
Low-level output voltage (QA' or QH')	V_{OL2}	V_{CC} = 4.5 V V_{IN} = 0.8 V	I_{OL} = 4 mA	All	---	0.4	V
Input clamp voltage	V_{IC}	V_{CC} = 4.5 V I_{IN} = -18 mA	T_C = +25°C	All	---	1.5	V
Low-level input current	I_{IL}	V_{CC} = 5.5 V V_{IN} = 0.4 V	SR/SL, S0, S1	All	0	-200	µA
			All other		0	-100	
High-level input current	I_{IH1}	V_{CC} = 5.5 V V_{IN} = 2.7 V		All	---	20	µA
High-level input current (A-H)	I_{IH2}	V_{CC} = 5.5 V V_{IN} = 5.5 V		All	---	100	µA
High-level input current (Any other)	I_{IH3}	V_{CC} = 5.5 V V_{IN} = 7.0 V		All	---	100	µA
Off-state output current, high-level voltage applied	I_{OZH}	V_{CC} = 5.5 V V_O = 2.7 V		All	---	20	µA
Off-state output current low-level voltage applied	I_{OZL}	V_{CC} = 5.5 V V_O = 0.4 V		All	---	-200	µA
Output current 1/	I_O	V_{CC} = 5.5 V V_O = 2.25 V	QA-QH	All	-30	-112	mA
			QA' or QH'		-15	-70	
Supply current outputs high	I_{CCH}	V_{CC} = 5.5 V V_{IN} = 5.0 V		All	---	28	mA
Supply current outputs low	I_{CCL}	V_{CC} = 5.5 V V_{IN} = 0 V		All	---	38	mA
Supply current outputs disabled	I_{CCZ}	V_{CC} = 5.5 V V_{IN} = 5.0 V		All	---	40	mA

1/ The output conditions have been chosen to produce a current that closely approximates one half of the true short-circuit output current, I_{OS}.

TABLE I. Electrical performance characteristics - Continued.

Test	Symbol	Conditions $-55°C \leq T_C \leq +125°C$	Device type	Limits Min	Limits Max	Unit
Maximum input clock frequency	F_{MAX}	V_{CC} = 5.0 V	All	25		MHz
Propagation delay time low to high, clock to QA-QH	t_{PLH1}	V_{CC} = 5.0 V C_L = 50 pf ±10% R_L = 500Ω	All	4	15	ns
Propagation delay time high to low, clock to QA-QH	t_{PHL1}		All	7	25	ns
Propagation delay time low to high, clock to QA'-QH'	t_{PLH2}		All	5	20	ns
Propagation delay time high to low, clock to QA'-QH'	t_{PHL2}		All	8	21	ns
Propagation delay time high to low, clear to QA-QH	t_{PHL3}		01	6	29	ns
Propagation delay time high to low, clear to QA'-QH'	t_{PHL4}		01	6	29	ns
Enable time to high level G to QA-QH	t_{PZH1}		All	6	21	ns
Enable time to low level G to QA-QH	t_{PZL1}		All	8	26	ns
Enable time to high level SO to QA-QH	t_{PZH3}		All	7	21	ns
Enable time to low level SO to QA-QH	t_{PZL3}		All	8	26	ns
Enable time to high level S1 to QA-QH	t_{PZH4}		All	7	21	ns
Enable time to low level S1 to QA-QH	t_{PZL4}		All	8	26	ns
Disable time from high level G to QA-QH	t_{PHZ1}		All	1	12	ns
Disable time from low level G to QA-QH	t_{PLZ1}		All	5	23	ns

TABLE I. Electrical performance characteristics - Continued.

Test	Symbol	Conditions $-55°C \leq T_C \leq +125°C$	Device type	Limits Min	Limits Max	Unit
Disable time from high level S0 to QA-QH	t_{PHZ3}	V_{CC} = 5.0 V C_L = 50 PF ±10% R_L = 500Ω	All	3	18	ns
Disable time from low level S0 to QA-QH	t_{PLZ3}		All	8	30	ns
Disable time from high level S1 to QA-QH	t_{PHZ4}		All	3	18	ns
Disable time from low level S1 to QA-QH	t_{PLZ4}		All	8	30	ns

3.2.2 Logic diagrams. The logic diagrams shall be as specified on figure 2.

3.2.3 Truth tables and timing diagrams. The truth tables and timing diagrams shall be as specified on figure 3.

3.2.4 Schematic circuits. Schematic circuits shall be submitted to the preparing activity prior to inclusion of a manufacturer's device in this specification and shall be submitted to the qualifying activity as a prerequisite for qualification. All manufacturers schematics shall be maintained and available upon request.

3.2.5 Case outlines. The case outlines shall be as specified in 1.2.3.

3.3 Lead material and finish. The lead material and finish shall be in accordance with MIL-M-38510 (see 6.5).

3.4 Electrical performance characteristics. The electrical performance characteristics are as specified in table I, and apply over the full recommended case operating temperature range, unless otherwise specified.

3.5 Electrical test requirements. The electrical test requirements for each device class shall be the subgroups specified in table II. The electrical tests for each subgroup are described in table III.

3.6 Marking. Marking shall be in accordance with MIL-M-38510. At the option of the manufacturer, marking of the country of origin may be omitted from the body of the microcircuit, but shall be retained on the initial container.

3.7 Microcircuit group assignment. The devices covered by this specification shall be in microcircuit group number 12 (see MIL-M-38510, appendix E).

TABLE II. Electrical test requirements.

MIL-STD-883 test requirements	Subgroups (see table III)	
	Class S devices	Class B devices
Interim electrical tests (pre burn-in) (method 5004)	1	1
Final electrical test parameters (method 5004)	1*,2,3,7,9,10,11	1*,2,3,7,9
Group A test requirements (method 5005)	1,2,3,7,8,9,10,11	1,2,3,7,9,10,11
Group B test requirements (method 5005)	1,2,3,7,8,9,10,11	N/A
Group C end-point electrical parameters (method 5005)	N/A	1,2,3
Additional electrical subgroups for group C inspections	N/A	N/A
Group D end-point electrical parameters (method 5005)	1,2,3	1,2,3

*PDA applies to subgroup 1 (see 4.2c).

4. QUALITY ASSURANCE PROVISIONS

4.1 Sampling and inspection. Sampling and inspection procedures shall be in accordance with MIL-M-38510 and methods 5005 and 5007, as applicable, of MIL-STD-883, except as modified herein.

4.2 Screening. Screening shall be in accordance with method 5004 of MIL-STD-883, and shall be conducted on all devices prior to qualification and quality conformance inspection. The following additional criteria shall apply:

a. Burn-in test (method 1015 of MIL-STD-883).

(1) Test condition D or E, using the circuit shown on figure 4, or equivalent.

(2) T_A = +125°C minimum.

b. Interim and final electrical tests shall be as specified in table II, except interim electrical tests prior to burn-in are optional at the discretion of the manufacturer.

c. The percent defective allowable (PDA) shall be as specified in MIL-M-38510.

4.3 Qualification inspection. Qualification inspection shall be in accordance with MIL-M-38510. Inspections to be performed shall be those specified in method 5005 of MIL-STD-883 and herein for groups A, B, C, and D inspections (see 4.4.1 through 4.4.4).

4.4 Quality conformance inspection. Quality conformance inspection shall be in accordance with MIL-M-38510 and as specified herein. Inspections to be performed shall be those specified in method 5005 of MIL-STD-883 and herein for groups A, B, C, and D inspections (see 4.4.1 through 4.4.4).

4.4.1 Group A inspection. Group A inspection shall be in accordance with table I of method 5005 of MIL-STD-883 and as follows:

a. Test requirements shall be as specified in table II herein.

b. Subgroups 4, 5, and 6 of table I of method 5005 of MIL-STD-883 shall be omitted.

4.4.2 Group B inspection. Group B inspection shall be in accordance with table II of method 5005 of MIL-STD-883. Electrical parameters shall be as specified in table II herein.

4.4.3 Group C inspection. Group C inspection shall be in accordance with table III of method 5005 of MIL-STD-883 and as follows:

a. End-point electrical tests shall be as specified in table II herein.

b. Steady-state life test (method 1005 of MIL-STD-883) conditions, or equivalent:

(1) Test condition D or E, using the circuit shown on figure 4, or equivalent.

(2) T_A = +125°C minimum.

(3) Test duration: 1,000 hours, except as permitted by appendix B of MIL-M-38510 and method 1005 of MIL-STD-883.

4.4.4 Group D inspection. Group D inspection shall be in accordance with table IV of method 5005 of MIL-STD-883. End-point electrical tests shall be as specified in table II herein.

4.5 Methods of inspection. Methods of inspection shall be specified as follows:

4.5.1 Voltage and current. All voltages given are referenced to the microcircuit ground terminal. Currents given are conventional and positive when flowing into the referenced terminal.

5. PACKAGING

5.1 Packaging requirements. The requirements for packaging shall be in accordance with MIL-M-38510.

6. NOTES

6.1 Notes. The notes specified in MIL-M-38510 are applicable to this specification.

6.2 Intended use. Microcircuits conforming to this specification are intended for use for Government microcircuit applications (original equipment) and logistic purposes.

Device types 01 and 02
Cases R and S

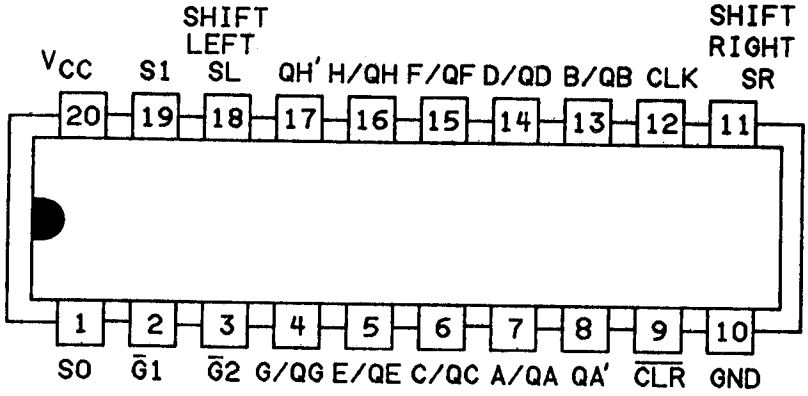

Device type 01 and 02
Case 2

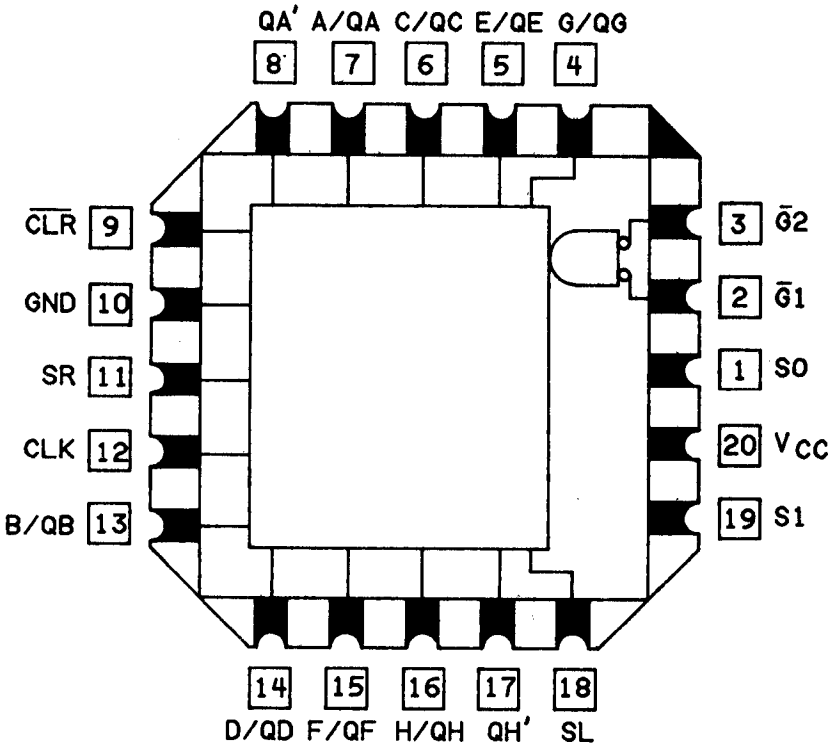

FIGURE 1. Terminal connections.

Device type 01

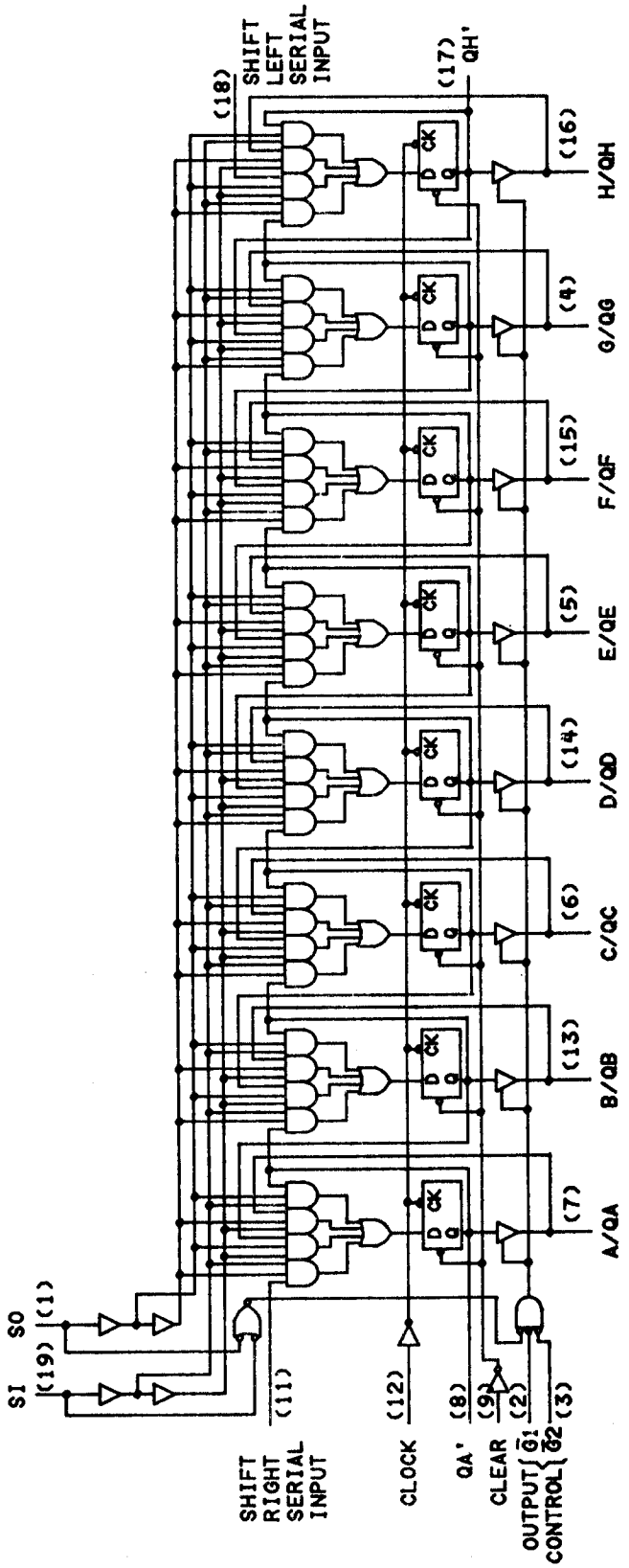

FIGURE 2. Logic diagrams.

Device type 02

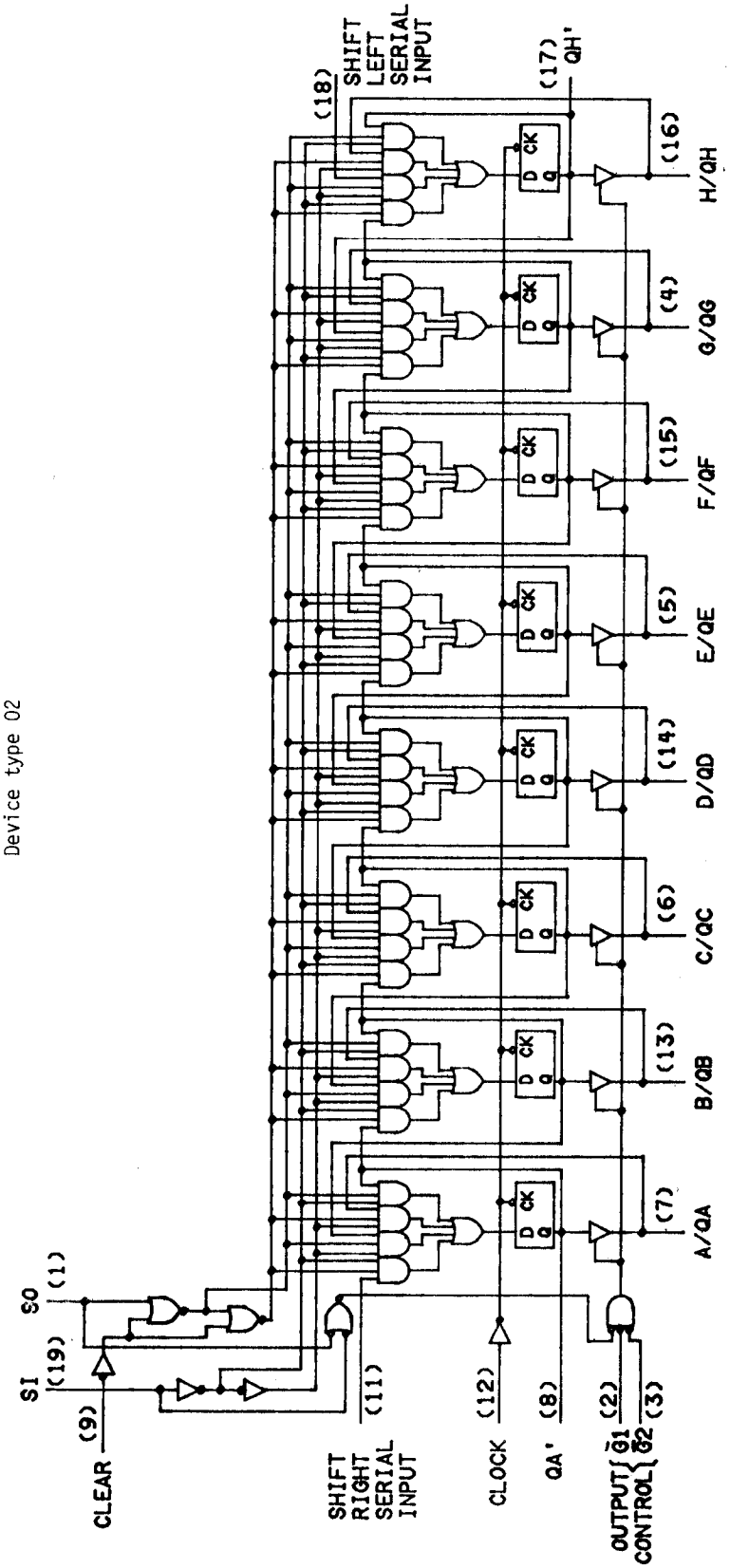

FIGURE 2. Logic diagrams - Continued.

Device type 01

MODE	INPUTS								INPUTS/OUTPUTS								OUTPUTS	
	CLEAR	FUNCTION SELECT S1	S0	OUTPUT CONTROL $\overline{G1}$ 1/	$\overline{G2}$ 1/	CLOCK	SERIAL SL	SR	A/QA	B/QB	C/QC	D/QD	E/QE	F/QF	G/QG	H/QH	QA'	QH'
CLEAR	L	X	L	L	L	X	X	X	L	L	L	L	L	L	L	L	L	L
	L	L	X	L	L	X	X	X	L	L	L	L	L	L	L	L	L	L
	L	H	H	X	X	X	X	X	X	X	X	X	X	X	X	X	L	L
HOLD	H	L	L	L	L	X	X	X	QA0	QB0	QC0	QD0	QE0	QF0	QG0	QH0	QA0	QH0
	H	X	X	L	L	L	X	X	QA0	QB0	QC0	QD0	QE0	QF0	QG0	QH0	QA0	QH0
SHIFT RIGHT	H	L	H	L	L	↑	X	H	H	QAn	QBn	QCn	QDn	QEn	QFn	QGn	H	QGn
	H	L	H	L	L	↑	X	L	L	QAn	QBn	QCn	QDn	QEn	QFn	QGn	L	QGn
SHIFT LEFT	H	H	L	L	L	↑	H	X	QBn	QCn	QDn	QEn	QFn	QGn	QHn	H	QBn	H
	H	H	L	L	L	↑	L	X	QBn	QCn	QDn	QEn	QFn	QGn	QHn	L	QBn	L
LOAD	H	H	H	X	X	↑	X	X	A	B	C	D	E	F	G	H	A	H

1/ When one or both output controls are high the eight input/output terminals are disabled to the high-impedance state; however, sequential operation or clearing of the register is not affected.

Device type 02

MODE	INPUTS								INPUTS/OUTPUTS								OUTPUTS	
	CLEAR	FUNCTION SELECT S1	S0	OUTPUT CONTROL $\overline{G1}$ 1/	$\overline{G2}$ 1/	CLOCK	SERIAL SL	SR	A/QA	B/QB	C/QC	D/QD	E/QE	F/QF	G/QG	H/QH	QA'	QH'
CLEAR	L	X	L	L	L	↑	X	X	L	L	L	L	L	L	L	L	L	L
	L	L	X	L	L	↑	X	X	L	L	L	L	L	L	L	L	L	L
	L	H	H	X	X	↑	X	X	X	X	X	X	X	X	X	X	L	L
HOLD	H	L	L	L	L	X	X	X	QA0	QB0	QC0	QD0	QE0	QF0	QG0	QH0	QA0	QH0
	H	X	X	L	L	L	X	X	QA0	QB0	QC0	QD0	QE0	QF0	QG0	QH0	QA0	QH0
SHIFT RIGHT	H	L	H	L	L	↑	X	H	H	QAn	QBn	QCn	QDn	QEn	QFn	QGn	H	QGn
	H	L	H	L	L	↑	X	L	L	QAn	QBn	QCn	QDn	QEn	QFn	QGn	L	QGn
SHIFT LEFT	H	H	L	L	L	↑	H	X	QBn	QCn	QDn	QEn	QFn	QGn	QHn	H	QBn	H
	H	H	L	L	L	↑	L	X	QBn	QCn	QDn	QEn	QFn	QGn	QHn	L	QBn	L
LOAD	H	H	H	X	X	↑	X	X	A	B	C	D	E	F	G	H	A	H

1/ When one or both output controls are high the eight input/output terminals are disabled to the high-impedance state; however, sequential operation or clearing of the register is not affected.

FIGURE 3. Truth tables and timing diagrams.

Device type 01

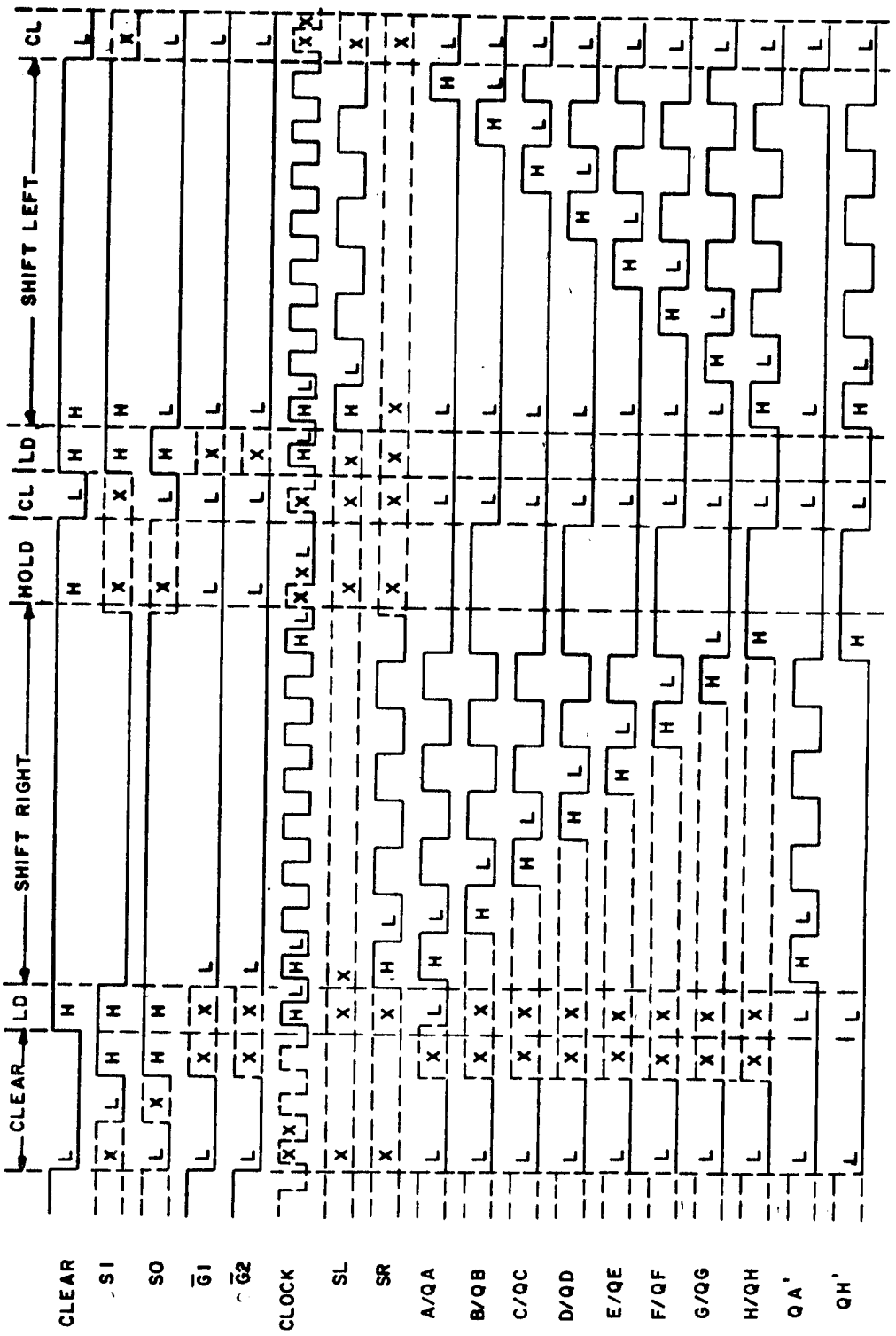

FIGURE 3. Truth tables and timing diagrams - Continued.

Device type 02

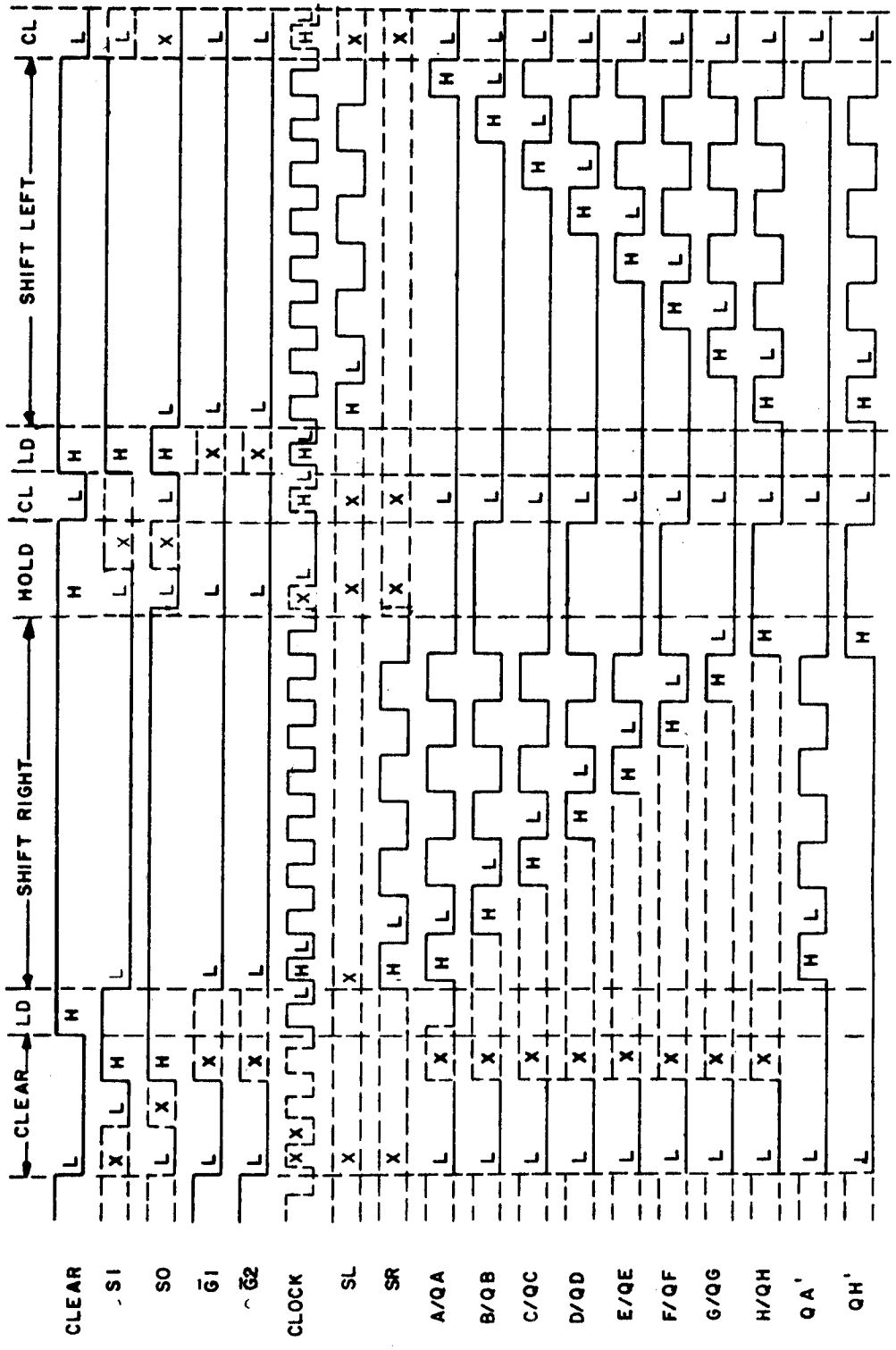

FIGURE 3. Truth tables and timing diagrams - Continued.

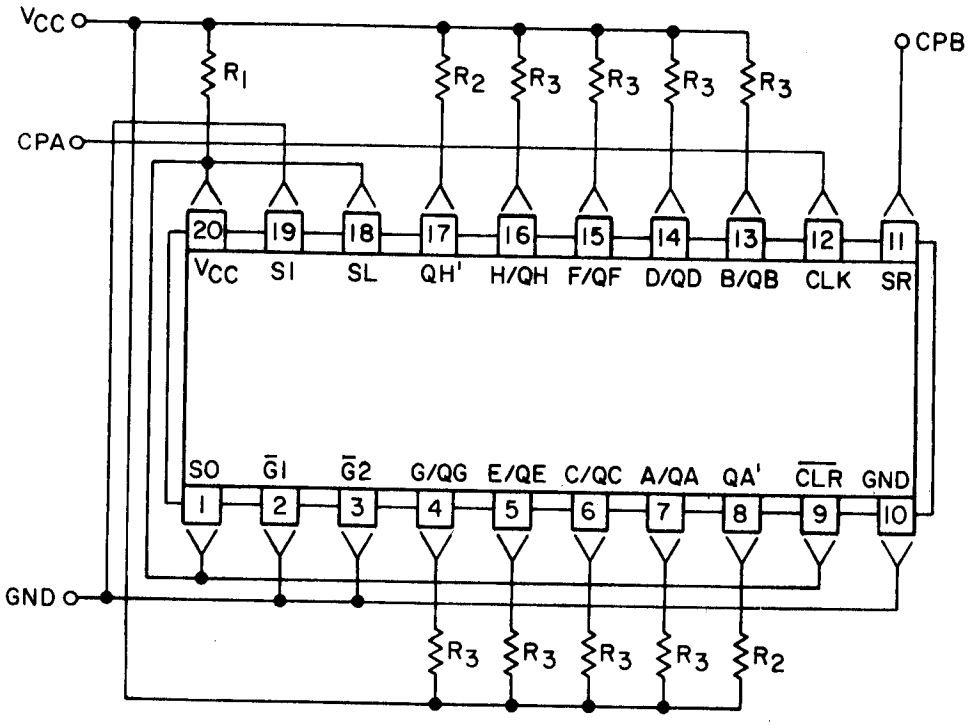

Device type 01 and 02

NOTES:
1. CPA = 100 kHz ±50% square wave; duty cycle = 50% ±15%; V_{IL} = -0.5 V minimum to +0.8 V maximum; V_{IH} = 2.0 V minimum to 5.5 V maximum.
2. CPB = 50 kHz ±50% square wave synchronized with CPA. All other conditions are the same as CPA.
3. R_2 = 1 kΩ ±10%; R_3 = 390Ω ±10%.
4. V_{CC} and R_1 shall be chosen to insure 5.0 V minimum at the device terminal.

FIGURE 4. Burn-in and life test circuits.

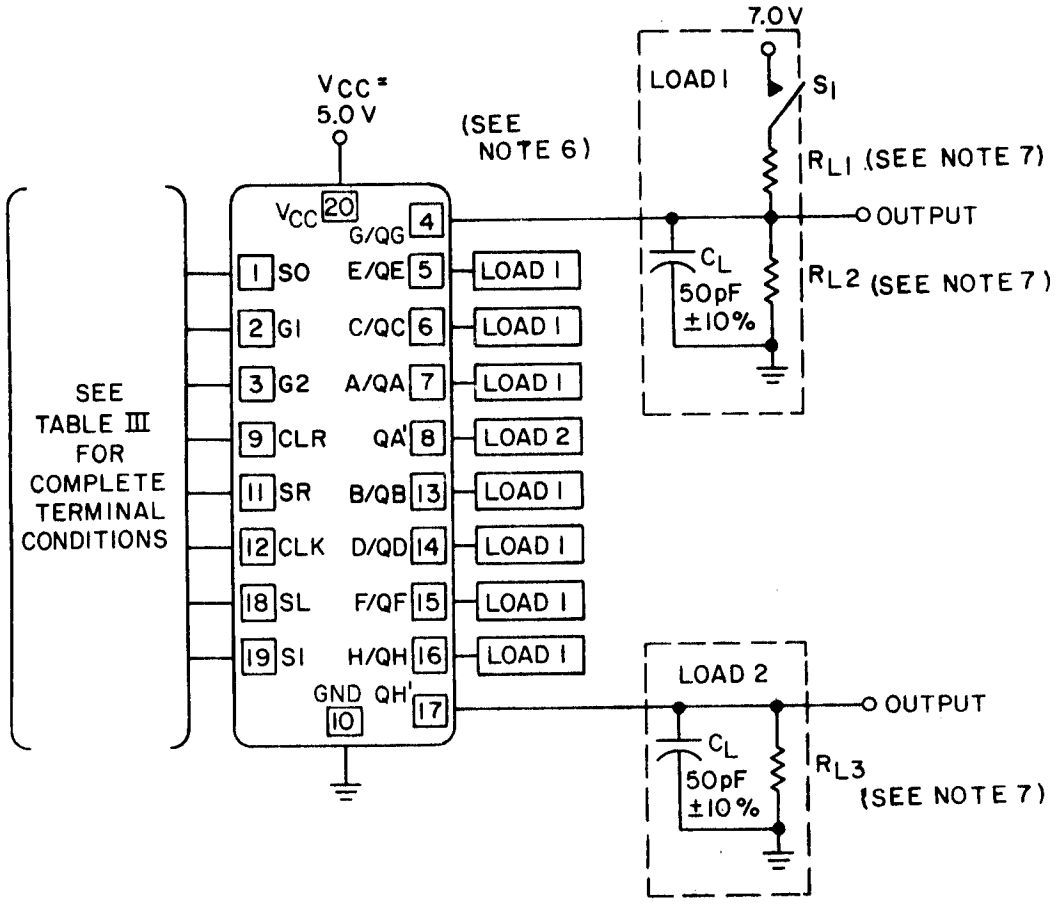

TEST CIRCUIT

NOTES:
1. Clock pulse characteristics: $t_1 = t_0 = 6 \pm 1.5$ ns, t_p (clock) = 25 ns; PRR $\leq$ 1 MHz.
2. Serial input (SR/SL, see table III) pulse characteristics: $t_1 = t_0 = 6 \pm 1.5$ ns.
   For t_{PHL}, t_{setup} = 18 ns, t_{hold} = 0 ns, t_p (serial) = 18 ns, PRR is 50% of clock PRR.
   For t_{PLH}, t_{setup} = 7 ns, t_{hold} = 0 ns, t_p (serial) = 7 ns, PRR is 50% of clock PRR.
3. For f_{MAX}, the clock pulse characteristics are as follows: For $T_C = 25^{\circ}C$; $t_1 = t_0 = \leq 3$ ns, t_p (clock) = 16.5 ns, PRR = 30 MHz. For $T_C = -55^{\circ}/+125^{\circ}C$; $t_1 = t_0 = \leq 3$ ns, t_p (clock) = 20 ns, PRR = 25 MHz. The Serial (SR/SL, see table III) input shall be one-half the frequency of the clock and the serial + and + shall be coincident with the clock + $t_1 = t_0 = 6 \pm 1.5$ ns.
4. Clear input pulse characteristics: $t_1 = t_0 = 6 \pm 1.5$ ns, t_p (clear) = 10 ns.
5. For tri-state switching, the $\overline{G}$, SO, or S1 input pulse characteristics shall be as follows: $t_1 = t_0 = 6 \pm 1.5$ ns, $t_p \geq 200$ ns, PRR $\leq$ 1 MHz.
6. C_L = 50 pF ±10% (including jig and probe capacitance).
7. $R_{L1} = R_{L2} = R_{L3} = 499\Omega \pm 1\%$.
8. Voltage measurements are to be made with respect to network ground terminal.

FIGURE 5. Switching test circuit (device type 01 and 02).

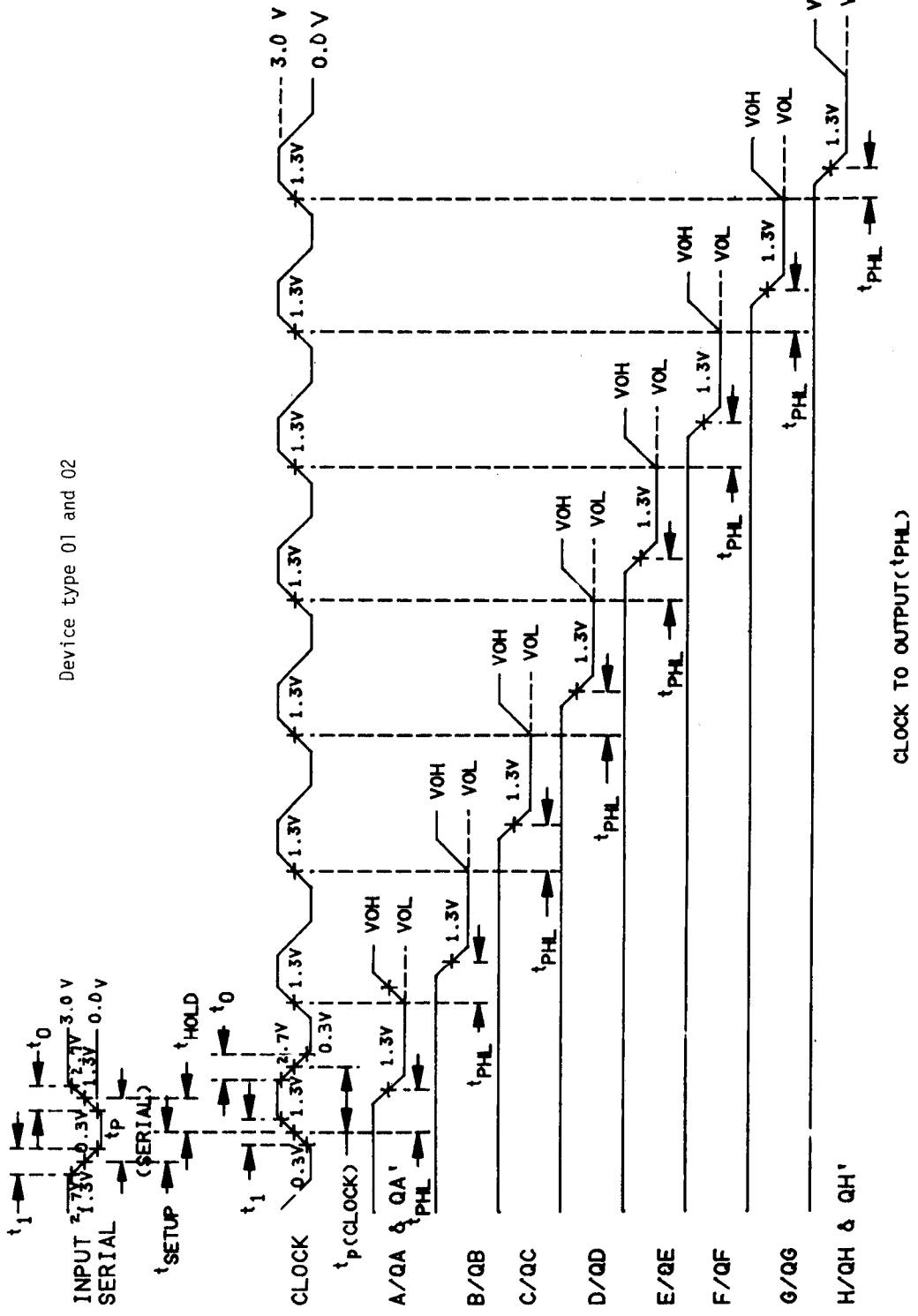

FIGURE 5. Serial switching waveshapes.

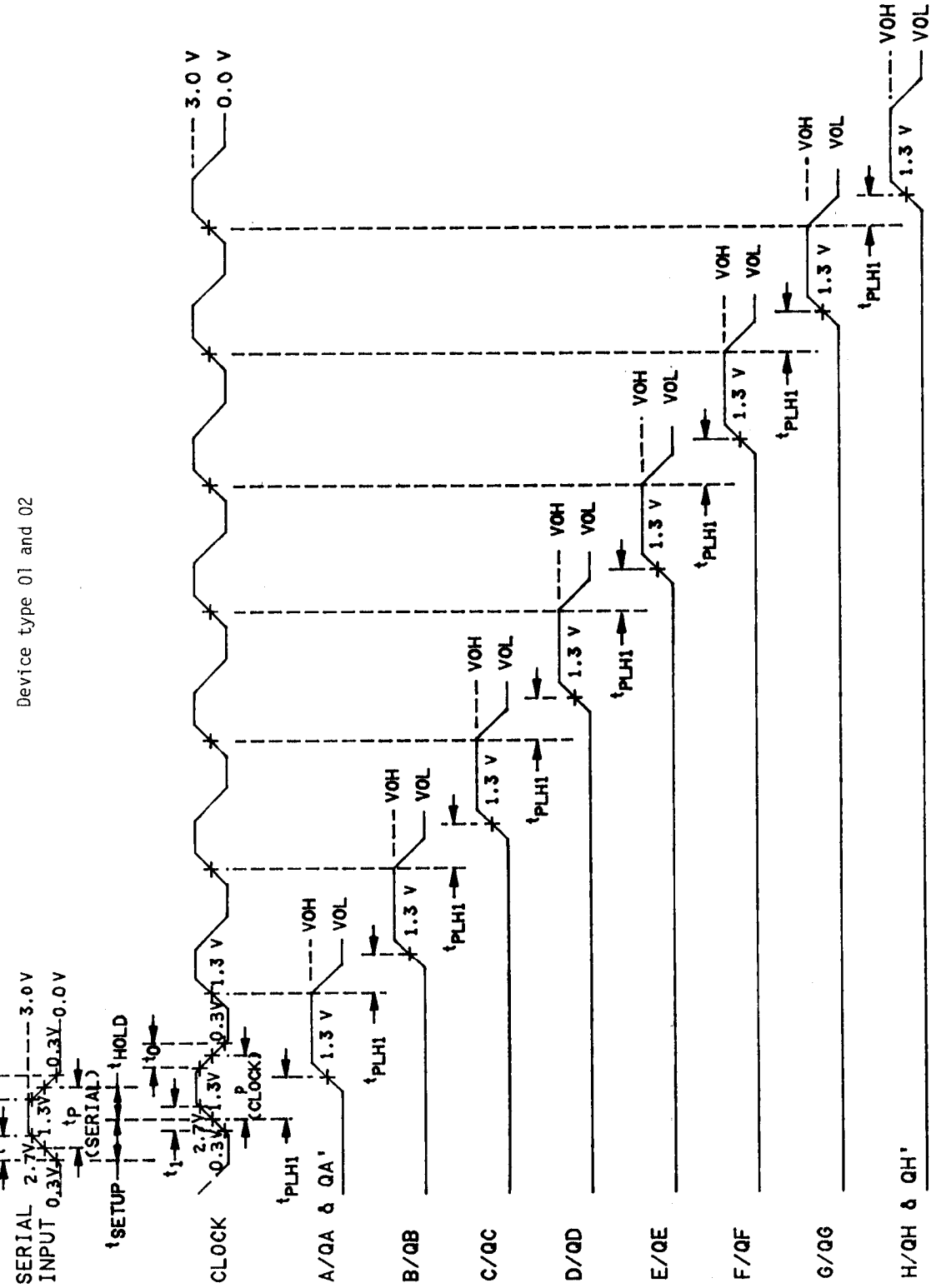

FIGURE 5. Serial switching waveshapes.

Device type 01

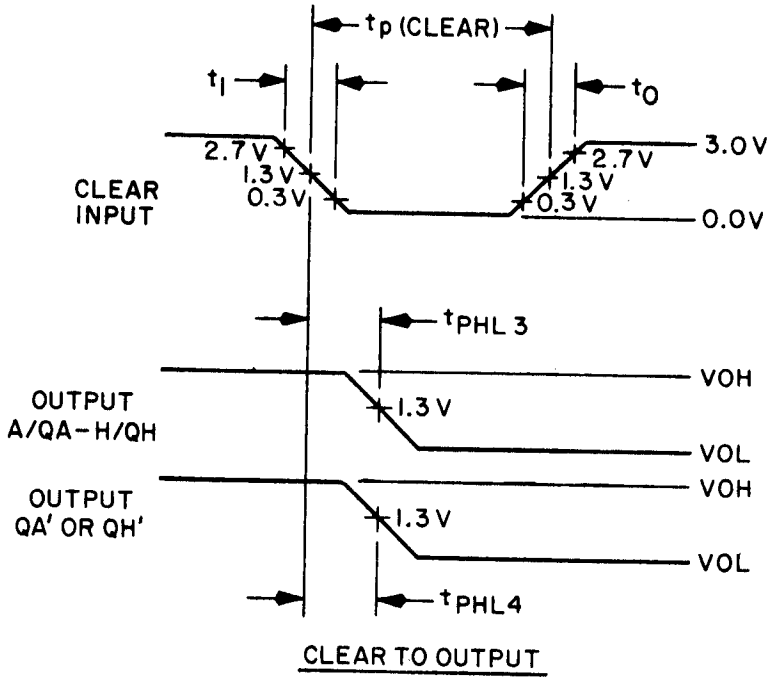

CLEAR TO OUTPUT

Device type 01 and 02

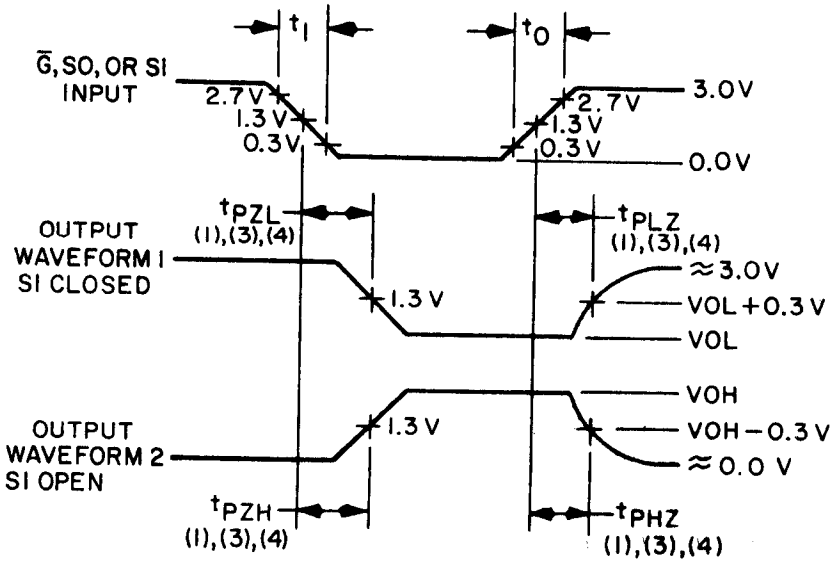

TRI-STATE SWITCHING

FIGURE 5. Clear and tri-state switching waveshapes.

TABLE III. Group A inspection for device types 01 and 02.
Terminal conditions (pins not designated may be high ≥2.0 V or low ≤0.8 V, or open)

Subgroup	Symbol	MIL-STD-883 method	Cases 2,R,S Test no.	1	2	3	4	5	6	7	8	9	10	11	12	13	14	15	16	17	18	19	20	Measured terminal	Test limits Min	Test limits Max	Unit
				SO	$\overline{G1}$	$\overline{G2}$	G/QG	E/QE	C/QC	A/QA	QA'	$\overline{CLR}$	GND	SR	CLK	B/QB	D/QD	F/QF	H/QH	QH'	SL	S1	V_{CC}				
1 T_C = +25°C	V_{OH1}	3006	1	2.0 V	0.8 V	0.8 V				-1.0 mA		2.0 V	GND	2.0 V	1/						2.0 V	0.8 V	4.5 V	A/QA	2.4		V
		"	2	"	"	"						"	"	"	2/	-1.0 mA					"	"	"	B/QB	"		"
		"	3	"	"	"			-1.0 mA			"	"	"	3/						"	"	"	C/QC	"		"
		"	4	"	"	"						"	"	"	4/		-1.0 mA				"	"	"	D/QD	"		"
		"	5	"	"	"		-1.0 mA				"	"	"	5/						"	"	"	E/QE	"		"
		"	6	"	"	"						"	"	"	6/			-1.0 mA			"	"	"	F/QF	"		"
		"	7	"	"	"	-1.0 mA					"	"	"	7/						"	"	"	G/QG	"		"
		"	8	"	"	"						"	"	"	8/				-1.0 mA		"	"	"	H/QH	"		"
	V_{OH2}	"	9	"	"	"					-400 mA	"	"	"	1/						"	"	"	QA'	2.5		"
		"	10	"	"	"						"	"	"	8/					-400 mA	"	"	"	QH'	2.5		"
	V_{OL1}	3007	11	"	"	"				12 mA		"	"	0.8 V	1/						"	"	"	A/QA		0.4	"
		"	12	"	"	"						"	"	"	2/	12 mA					"	"	"	B/QB		"	"
		"	13	"	"	"			12 mA			"	"	"	3/						"	"	"	C/QC		"	"
		"	14	"	"	"						"	"	"	4/		12 mA				"	"	"	D/QD		"	"
		"	15	"	"	"		12 mA				"	"	"	5/						"	"	"	E/QE		"	"
		"	16	"	"	"						"	"	"	6/			12 mA			"	"	"	F/QF		"	"
		"	17	"	"	"	12 mA					"	"	"	7/						"	"	"	G/QG		"	"
		"	18	"	"	"						"	"	"	8/				12 mA		"	"	"	H/QH		"	"
	V_{OL2}	"	19	"	"	"					4 mA	"	"	"	1/						"	"	"	QA'		"	"
		"	20	"	"	"						"	"	"	8/					4 mA	"	"	"	QH'		"	"
	V_{IC}		21	-18 mA									"										"	SO		-1.5	"
			22		-18 mA								"										"	$\overline{G1}$		"	"
			23			-18 mA							"										"	$\overline{G2}$		"	"
			24				-18 mA						"										"	G/QG		"	"
			25					-18 mA					"										"	E/QE		"	"
			26						-18 mA				"										"	C/QC		"	"
			27							-18 mA			"										"	A/QA		"	"
			28									-18 mA	"										"	$\overline{CLR}$		"	"
			29										"	-18 mA									"	SR		"	"
			30										"		-18 mA								"	CLK		"	"
			31										"			-18 mA							"	B/QB		"	"
			32										"				-18 mA						"	D/QD		"	"
			33										"					-18 mA					"	F/QF		"	"
			34										"						-18 mA				"	H/QH		"	"
			35										"								-18 mA		"	SL		"	"
			36										"									-18 mA	"	S1		"	"
	I_{IL}	3009	37		0.4 V								"										5.5 V	$\overline{G1}$	14/	14/	μA
		"	38			0.4 V							"										"	$\overline{G2}$	"	"	"
		"	39									0.4 V	"										"	$\overline{CLR}$	"	"	"
		"	40										"		0.4 V								"	CLK	"	"	"
	I_{IL}	"	41	0.4 V									"										"	SO	"	"	"
		"	42										"									0.4 V	"	S1	"	"	"
		"	43										"	0.4 V									"	SR	"	"	"
		"	44										"								0.4 V		"	SL	"	"	"
	I_{IH1}	3010	45	2.7 V									"										"	SO		20	"
		"	46		2.7 V								"										"	$\overline{G1}$		"	"
		"	47			2.7 V							"										"	$\overline{G2}$		"	"
		"	48										"										"	$\overline{CLR}$		"	"
		"	49										"										"	SR		"	"
		"	50										"		2.7 V								"	CLK		"	"
		"	51									2.7 V	"	2.7 V									"	SL		"	"
		"	52										"									2.7 V	"	S1		"	"

See notes at end of table III.

TABLE III. Group A inspection for device types 01 and 02 - Continued.
Terminal conditions (pins not designated may be high ≥2.0 V or low ≤0.8 V, or open)

Subgroup	Symbol	MIL-STD-883 method	Cases 2,R,S Test no.	1 SO	2 $\overline{G1}$	3 $\overline{G2}$	4 G/QG	5 E/QE	6 C/QC	7 A/QA	8 QA'	9 $\overline{CLR}$	10 GND	11 SR	12 CLK	13 B/QB	14 D/QD	15 F/QF	16 H/QH	17 QH'	18 SL	19 S1	20 V_{CC}	Measured terminal	Test Limits Min	Test Limits Max	Unit
1 T_C = +25°C	I_{IH2}	3010	53	5.5 V									GND										5.5 V	SO		100	µA
		"	54		5.5 V								"										"	$\overline{G1}$		"	"
		"	55			5.5 V							"										"	$\overline{G2}$		"	"
		"	56				5.5 V						"										"	G/QG		"	"
		"	57					5.5 V					"										"	E/QE		"	"
		"	58						5.5 V				"										"	C/QC		"	"
		"	59							5.5 V			"										"	A/QA		"	"
		"	60									5.5 V	"										"	$\overline{CLR}$		"	"
		"	61										"	5.5 V									"	SR		"	"
		"	62										"		5.5 V								"	CLK		"	"
		"	63										"			5.5 V							"	B/QB		"	"
		"	64										"				5.5 V						"	D/QD		"	"
		"	65										"					5.5 V					"	F/QF		"	"
		"	66										"						5.5 V				"	H/QH		"	"
		"	67										"							5.5 V			"	SL		"	"
		"	68										"								5.5 V		"	S1		"	"
	I_{IH3}	"	69	7.0 V									"										"	SO		"	"
		"	70		7.0 V								"										"	$\overline{G1}$		"	"
		"	71			7.0 V							"										"	$\overline{G2}$		"	"
		"	72									7.0 V	"										"	$\overline{CLR}$		"	"
		"	73										"	7.0 V									"	SR		"	"
		"	74										"		7.0 V								"	CLK		"	"
		"	75										"							7.0 V			"	SL		"	"
		"	76										"								7.0 V		"	S1		"	"
	I_{OZH}		77	2.0 V	2.0 V	2.0 V				2.7 V		2.0 V	"	2.0 V	8/						2.0 V		"	A/QA		20	"
			78	"	"	"						"	"	"	"	2.7 V					"		"	B/QB		"	"
			79	"	"	"			2.7 V			"	"	"	"						"		"	C/QC		"	"
			80	"	"	"						"	"	"	"		2.7 V				"		"	D/QD		"	"
			81	"	"	"		2.7 V				"	"	"	"						"		"	E/QE		"	"
			82	"	"	"	2.7 V					"	"	"	"			2.7 V			"		"	F/QF		"	"
			83	"	"	"						"	"	"	"						"		"	G/QG		"	"
			84	"	"	"						"	"	"	"				2.7 V		"		"	H/QH		"	"
	I_{OZL}		85	"	"	"				0.4 V		"	"	"	"						"	2.0 V	"	A/QA		-200	"
			86	"	"	"						"	"	"	"	0.4 V					"	"	"	B/QB		"	"
			87	"	"	"			0.4 V			"	"	"	"						"	"	"	C/QC		"	"
			88	"	"	"						"	"	"	"		0.4 V				"	"	"	D/QD		"	"
			89	"	"	"		0.4 V				"	"	"	"						"	"	"	E/QE		"	"
			90	"	"	"	0.4 V					"	"	"	"			0.4 V			"	"	"	F/QF		"	"
			91	"	"	"						"	"	"	"						"	"	"	G/QG		"	"
			92	"	"	"						"	"	"	"				0.4 V		"	"	"	H/QH		"	"
	I_{O} 9/	3011	93	4.5 V	GND	GND				2.25 V		4.5 V	"	4.5 V	1/						4.5 V	GND	"	A/QA	15/ -30	15/ -112	mA
		"	94	"	"	"						"	"	"	2/	2.25 V					"	"	"	B/QB	"	"	"
		"	95	"	"	"			2.25 V			"	"	"	3/						"	"	"	C/QC	"	"	"
		"	96	"	"	"						"	"	"	4/		2.25 V				"	"	"	D/QD	"	"	"
		"	97	"	"	"		2.25 V				"	"	"	5/						"	"	"	E/QE	"	"	"
		"	98	"	"	"						"	"	"	6/			2.25 V			"	"	"	F/QF	"	"	"
		"	99	"	"	"	2.25 V					"	"	"	7/						"	"	"	G/QG	"	"	"
		"	100	"	"	"						"	"	"	8/				2.25 V		"	"	"	H/QH	"	"	"
		"	101	"	"	"					2.25 V	"	"	"	1/						"	"	"	QA'	-15	-70	"
		"	102	"	"	"						"	"	"	8/					2.25 V	"	"	"	QH'	-15	-70	"

See footnotes at end of table III.

TABLE III. Group A inspection for device types 01 and 02 - Continued.
Terminal conditions (pins not designated may be high ≥2.0 V or low ≤0.8 V, or open)

Subgroup	Symbol	MIL-STD-883 method	Cases 2,R,S Test no.	1 SO	2 $\overline{G1}$	3 $\overline{G2}$	4 G/QG	5 E/QE	6 C/QC	7 A/QA	8 QA'	9 $\overline{CLR}$	10 GND	11 SR	12 CLK	13 B/QB	14 D/QD	15 F/QF	16 H/QH	17 QH'	18 SL	19 S1	20 V_{CC}	Measured terminal	Test limits Min	Test limits Max	Unit
1 T_C = +25°C	I_{CCH}	3005	103	4.5 V	GND	GND						4.5 V	GND	4.5 V	8/						4.5 V	GND	5.5 V	V_{CC}		28	mA
	I_{CCL}	3005	104	GND	"	"						GND	"	GND	GND						GND	GND	"	V_{CC}		38	"
	I_{CCZ}	3005	105	GND	"	4.5 V	4.5 V	4.5 V	4.5 V	4.5 V		GND	"	GND	GND	4.5 V	4.5 V	4.5 V	4.5 V		GND	GND	"	V_{CC}		40	"
2	Same tests, terminal conditions, and limits as for subgroup 1, except T_C = +125°C and V_{IC} tests are omitted.																										
3	Same tests, terminal conditions, and limits as for subgroup 1, except T_C = +125°C and V_{IC} tests are omitted.																										

See footnotes at end of table III.

TABLE III. Group A inspection for device type 01 - Continued.
Terminal conditions (pins not designated may be high ≥2.0 V or low ≤0.8 V, or open)

Subgroup	Symbol	MIL-STD-883 method	Cases 2,R,S Test no.	1 SO	2 $\overline{G1}$	3 $\overline{G2}$	4 G/QG	5 E/QE	6 C/QC	7 A/QA	8 QA'	9 $\overline{CLR}$	10 GND	11 SR	12 CLK	13 B/QB	14 D/QD	15 F/QF	16 H/QH	17 QH'	18 SL	19 S1	20 V_{CC}	Measured terminal	Test limits Min	Test limits Max	Unit
7 T_C = +25°C 12/ 13/	Truth table test	3014	106	B	B	B	L	L	L	L	L	B	GND	A	B	L	L	L	L	L	A	B	5.0 V	All outputs	C	C	
		"	107	A	"	"	"	"	"	L	L	A	"	"	B	"	"	"	"	"	"	"	"	"	"	"	
		"	108	"	"	"	"	"	"	H	H	"	"	"	A	"	"	"	"	"	"	"	"	"	"	"	
		"	109	"	"	"	"	"	"	"	"	"	"	"	B	"	"	"	"	"	"	"	"	"	"	"	
		"	110	"	"	"	"	"	"	"	"	"	"	"	A	H	"	"	"	"	"	"	"	"	"	"	
		"	111	"	"	"	"	"	"	"	"	"	"	"	B	"	"	"	"	"	"	"	"	"	"	"	
		"	112	"	"	"	"	"	H	"	"	"	"	"	A	"	"	"	"	"	"	"	"	"	"	"	
		"	113	"	"	"	"	"	"	"	"	"	"	"	B	"	"	"	"	"	"	"	"	"	"	"	
		"	114	"	"	"	"	"	"	"	"	"	"	"	A	"	"	"	"	"	"	"	"	"	"	"	
		"	115	"	"	"	"	"	"	"	"	"	"	"	B	"	H	"	"	"	"	"	"	"	"	"	
		"	116	"	"	"	"	H	"	"	"	"	"	"	A	"	"	"	"	"	"	"	"	"	"	"	
		"	117	"	"	"	"	"	"	"	"	"	"	"	B	"	"	"	"	"	"	"	"	"	"	"	
		"	118	"	"	"	"	"	"	"	"	"	"	"	A	"	"	"	"	"	"	"	"	"	"	"	
		"	119	"	"	"	"	"	"	"	"	"	"	"	B	"	"	H	"	"	"	"	"	"	"	"	
		"	120	"	"	"	H	"	"	"	"	"	"	"	A	"	"	"	"	"	"	"	"	"	"	"	
		"	121	"	"	"	"	"	"	"	"	"	"	"	B	"	"	"	"	"	"	"	"	"	"	"	
		"	122	"	"	"	"	"	"	"	"	"	"	"	A	"	"	"	"	"	"	"	"	"	"	"	
		"	123	"	"	"	"	"	"	"	"	"	"	"	B	"	"	"	"	H	"	"	"	"	"	"	
		"	124	B	"	"	"	"	"	"	"	"	"	"	A	"	"	"	"	"	"	"	"	"	"	"	
		"	125	B	"	"	"	"	"	"	"	"	"	"	B	"	"	"	"	"	"	"	"	"	"	"	
		"	126	A	"	"	"	"	"	"	"	"	"	"	A	"	"	"	"	"	"	"	"	"	"	"	
		"	127	"	"	"	"	"	"	"	"	"	"	B	B	"	"	"	"	"	"	"	"	"	"	"	
		"	128	"	"	"	"	"	"	L	L	"	"	"	A	"	"	"	"	"	"	"	"	"	"	"	
		"	129	"	"	"	"	"	"	"	"	"	"	"	B	"	"	"	"	"	"	"	"	"	"	"	
		"	130	"	"	"	"	"	"	"	"	"	"	"	A	L	"	"	"	"	"	"	"	"	"	"	
		"	131	"	"	"	"	"	L	"	"	"	"	"	B	"	"	"	"	"	"	"	"	"	"	"	
		"	132	"	"	"	"	"	"	"	"	"	"	"	A	"	"	"	"	"	"	"	"	"	"	"	
		"	133	"	"	"	"	"	"	"	"	"	"	"	B	"	"	"	"	"	"	"	"	"	"	"	
		"	134	"	"	"	"	"	"	"	"	"	"	"	A	"	L	"	"	"	"	"	"	"	"	"	
		"	135	"	"	"	"	L	"	"	"	"	"	"	B	"	"	"	"	"	"	"	"	"	"	"	
		"	136	"	"	"	"	"	"	"	"	"	"	"	A	"	"	"	"	"	"	"	"	"	"	"	
		"	137	"	"	"	"	"	"	"	"	"	"	"	B	"	"	"	"	"	"	"	"	"	"	"	
		"	138	"	"	"	"	"	"	"	"	"	"	"	A	"	"	"	L	"	"	"	"	"	"	"	
		"	139	"	"	"	L	"	"	"	"	"	"	"	B	"	"	"	"	"	"	"	"	"	"	"	
		"	140	"	"	"	"	"	"	"	"	"	"	"	A	"	"	"	"	"	"	"	"	"	"	"	
		"	141	"	"	"	"	"	"	"	"	"	"	"	B	"	"	"	"	"	"	"	"	"	"	"	
		"	142	"	"	"	"	"	"	"	"	"	"	"	A	"	"	"	"	"	"	"	"	"	"	"	
		"	143	B	"	"	"	"	"	"	"	"	"	"	B	"	"	"	"	"	"	"	"	"	"	"	
		"	144	"	"	"	"	"	"	"	"	"	"	A	A	"	"	"	"	"	"	"	"	"	"	"	
		"	145	"	"	"	"	"	"	"	"	"	"	"	B	"	"	"	"	"	"	"	"	"	"	"	
		"	146	"	"	"	H	"	"	"	"	"	"	"	A	"	"	"	"	"	"	"	"	"	"	"	
		"	147	"	"	"	"	"	"	"	"	"	"	"	B	"	"	"	"	"	"	"	"	"	"	"	
		"	148	"	"	"	"	"	"	"	"	"	"	"	A	"	"	"	"	"	"	"	"	"	"	"	
		"	149	"	"	"	"	"	"	"	"	"	"	"	B	"	"	"	"	"	"	"	"	"	"	"	
		"	150	"	"	"	"	H	"	"	"	"	"	"	A	"	"	H	"	"	"	"	"	"	"	"	
		"	151	"	"	"	"	"	"	"	"	"	"	"	B	"	"	"	"	"	"	"	"	"	"	"	
		"	152	"	"	"	"	"	"	"	"	"	"	"	A	"	"	"	"	"	"	"	"	"	"	"	
		"	153	"	"	"	"	"	"	"	"	"	"	"	B	"	"	"	"	"	"	"	"	"	"	"	
		"	154	"	"	"	"	"	H	"	"	"	"	"	A	"	"	"	"	"	"	"	"	"	"	"	
		"	155	"	"	"	"	"	"	"	"	"	"	"	B	"	"	"	"	"	"	"	"	"	"	"	
		"	156	"	"	"	"	"	"	"	"	"	"	"	A	"	"	"	"	"	"	"	"	"	"	"	
		"	157	"	"	"	"	"	"	"	"	"	"	"	B	"	H	"	"	"	"	"	"	"	"	"	
		"	158	"	"	"	"	"	"	H	H	"	"	"	A	"	"	"	"	"	"	"	"	"	"	"	
		"	159	"	"	"	"	"	"	"	"	"	"	"	B	"	"	"	"	"	"	"	"	"	"	"	
		"	160	"	"	"	"	"	"	"	"	"	"	"	A	"	"	"	"	"	"	"	"	"	"	"	
		"	161	"	"	"	"	"	"	"	"	"	"	"	B	"	"	"	"	"	"	"	B	"	"	"	
		"	162	"	"	"	"	"	"	"	"	"	"	"	A	"	"	"	"	"	"	"	A	"	"	"	
		"	163	"	"	"	"	"	"	"	"	"	"	"	B	"	"	"	"	"	"	B	"	"	"	"	
		"	164	"	"	"	"	"	"	"	"	"	"	"	A	"	"	"	"	"	"	A	"	"	"	"	
		"	165	"	"	"	"	"	"	"	"	"	"	"	B	"	"	"	"	"	"	"	"	"	"	"	
		"	166	"	"	"	L	"	"	"	"	"	"	"	A	"	"	"	"	"	L	"	"	"	"	"	
		"	167	"	"	"	"	"	"	"	"	"	"	"	B	"	"	"	"	"	"	"	"	"	"	"	
		"	168	"	"	"	"	"	"	"	"	"	"	"	A	"	"	"	"	"	"	"	"	"	"	"	
		"	169	"	"	"	"	"	"	"	"	"	"	"	B	"	"	"	L	"	"	"	"	"	"	"	

See footnotes at end of table III.

TABLE III. Group A inspection for device type 01 - Continued.
Terminal conditions (pins not designated may be high ≥2.0 V or low ≤0.8 V, or open)

Subgroup	Symbol	MIL-STD-883 method	Cases 2,R,S Test no.	1 SO	2 $\overline{G1}$	3 $\overline{G2}$	4 G/QG	5 E/QE	6 C/QC	7 A/QA	8 QA'	9 $\overline{CLR}$	10 GND	11 SR	12 CLK	13 B/QB	14 D/QD	15 F/QF	16 H/QH	17 QH'	18 SL	19 S1	20 V_{CC}	Measured terminal	Test limits Min	Test limits Max	Unit
7 T_C = 25°C 12/ 13/	Truth table test	3014	170	B	B	B	L	L	H	H	H	A	GND	A	A	H	H	L	L	B	A	5.0 V	All outputs	C	C	
			171	"	"	"	"	"	"	"	"	"	"	"	B	"	"	"	"	"	"	"	"	"	"	"	
			172	"	"	"	"	"	"	"	"	"	"	"	A	"	"	"	"	"	"	"	"	"	"	"	
			173	"	"	"	"	"	"	"	"	"	"	"	B	"	"	"	"	"	"	"	"	"	"	"	
			174	"	"	"	"	"	L	"	"	"	"	"	A	"	"	"	"	"	"	"	"	"	"	"	
			175	"	"	"	"	"	"	"	"	"	"	"	B	"	"	"	"	"	"	"	"	"	"	"	
			176	"	"	"	"	"	"	"	"	"	"	"	A	"	"	"	"	"	"	"	"	"	"	"	
			177	"	"	"	"	"	"	L	"	"	"	"	B	"	"	"	"	"	"	"	"	"	"	"	
			178	"	"	"	"	"	"	L	L	"	"	"	A	"	"	"	"	"	"	"	"	"	"	"	
			179	"	"	"	"	"	"	X	L	"	"	"	B	"	"	"	"	"	"	"	"	"	"	"	
			180	A	"	"	X	X	X	A	H	"	"	"	A	"	X	X	X	L	B	A	"	"	"	"	
			181	"	"	"	B	A	B	B	"	"	"	"	B	"	A	B	A	H	"	"	"	"	"	"	
			182	"	"	"	"	B	A	L	"	"	"	"	A	"	B	L	B	L	"	"	"	"	"	"	
			183	"	"	"	A	"	"	"	"	"	"	"	B	"	A	"	"	"	"	"	"	"	"	"	
			184	"	"	"	"	"	"	"	"	"	"	"	A	"	"	"	"	"	"	"	"	"	"	"	
			185	"	"	"	"	"	"	"	"	"	"	"	B	"	"	"	"	"	"	"	"	"	"	"	
			186	"	"	"	"	"	"	"	"	"	"	"	A	"	"	"	"	"	"	"	"	"	"	"	
			187	B	"	"	H	L	H	L	"	"	"	"	B	"	H	L	H	L	"	"	"	"	"	"	
			188	"	"	"	"	"	"	"	"	"	"	"	A	"	"	"	"	"	"	"	"	"	"	"	
			189	"	"	"	"	"	"	"	"	"	"	"	B	"	"	"	"	"	"	"	"	"	"	"	
			190	"	"	"	"	"	"	"	"	"	"	"	A	"	"	"	"	"	"	"	"	"	"	"	
			191	"	"	"	"	"	"	"	"	"	"	"	B	"	"	"	"	"	"	"	"	"	"	"	
			192	"	"	"	"	"	"	"	"	"	"	"	A	"	"	"	"	"	"	"	"	"	"	"	
			193	A	A	A	X	X	X	X	H	B	"	"	B	"	X	X	X	H	A	B	"	"	"	"	
			194	"	"	"	B	A	B	A	"	A	"	"	A	"	B	A	B	L	B	A	"	"	"	"	
			195	"	"	"	"	B	A	B	"	"	"	"	B	"	A	B	A	H	"	"	"	"	"	"	
			196	"	"	"	"	"	"	"	"	"	"	"	A	"	B	A	B	L	"	"	"	"	"	"	
			197	"	"	"	"	"	"	"	"	"	"	"	B	"	A	B	A	H	"	"	"	"	"	"	
			198	"	"	"	"	"	"	"	"	"	"	"	A	"	B	A	B	L	"	"	"	"	"	"	
			199	"	"	"	"	"	"	"	"	"	"	"	B	"	A	B	A	H	"	"	"	"	"	"	
			200	"	"	"	"	"	"	"	"	"	"	"	A	"	B	A	B	L	"	"	"	"	"	"	
			201	"	"	"	"	"	"	"	"	"	"	"	B	"	A	B	A	H	"	"	"	"	"	"	
			202	"	"	"	"	"	"	"	"	"	"	"	A	"	B	A	B	L	"	"	"	"	"	"	
			203	"	"	"	"	"	"	"	"	"	"	"	B	"	A	B	A	H	"	"	"	"	"	"	
			204	"	"	"	"	"	"	"	"	"	"	"	A	"	B	A	B	L	"	"	"	"	"	"	
			205	"	"	"	"	"	"	"	"	"	"	"	B	"	A	B	A	H	"	"	"	"	"	"	
			206	"	"	"	"	"	"	"	"	"	"	"	A	"	B	A	B	L	"	"	"	"	"	"	
			207	"	"	"	"	"	"	"	"	"	"	"	B	"	A	B	A	H	"	"	"	"	"	"	
			208	"	"	"	"	"	"	"	"	"	"	"	A	"	B	A	B	L	"	"	"	"	"	"	
			209	"	"	"	"	"	"	"	"	"	"	"	B	"	A	B	A	H	"	"	"	"	"	"	
			210	"	"	"	"	"	"	"	"	"	"	"	A	"	B	A	B	L	"	"	"	"	"	"	
			211	"	B	B	H	H	H	H	"	"	"	"	B	"	A	H	A	H	"	"	"	"	"	"	
			212	"	"	A	H	H	H	H	"	"	"	"	A	"	B	H	B	H	"	"	"	"	"	"	
			213	"	"	"	A	A	A	A	"	"	"	"	B	"	A	H	A	H	"	"	"	"	"	"	
			214	"	"	"	"	"	"	"	"	"	"	"	A	"	B	H	B	H	"	"	"	"	"	"	
			215	B	"	"	"	"	"	"	"	"	"	"	B	"	A	H	A	H	"	"	"	"	"	"	
			216	"	"	"	"	"	"	"	"	"	"	"	A	"	B	H	B	H	"	"	"	"	"	"	
			217	"	"	"	"	"	"	"	"	"	"	"	B	"	A	H	A	H	"	"	"	"	"	"	
			218	"	"	"	"	"	"	"	"	"	"	"	A	"	B	H	B	H	"	"	"	"	"	"	
			219	"	"	"	"	"	"	"	"	"	"	"	B	"	A	H	A	H	"	"	"	"	"	"	
			220	"	"	"	"	"	"	"	"	"	"	"	A	"	B	H	B	H	"	"	"	"	"	"	
			221	"	"	"	"	"	"	"	"	"	"	"	B	"	A	H	A	H	"	"	"	"	"	"	
			222	"	"	"	"	"	"	"	"	"	"	"	A	"	B	H	B	H	"	"	"	"	"	"	
			223	"	"	"	"	"	"	"	"	"	"	"	B	"	A	H	A	H	"	"	"	"	"	"	
			224	"	"	"	"	"	"	"	"	"	"	"	A	"	B	H	B	H	"	"	"	"	"	"	
			225	"	"	"	"	"	"	"	"	"	"	"	B	"	A	H	A	H	"	"	"	"	"	"	
			226	"	"	"	"	"	"	"	"	"	"	"	A	"	B	H	B	H	"	"	"	"	"	"	
			227	"	"	"	"	"	"	"	"	"	"	"	B	"	A	H	A	H	"	"	"	"	"	"	
			228	"	"	"	"	"	"	"	"	"	"	"	A	"	B	H	B	H	"	"	"	"	"	"	
			229	"	"	"	"	"	"	"	L	"	"	"	B	"	A	H	A	H	"	"	"	"	"	"	
			230	"	"	B	L	L	L	L	"	"	"	"	B	B	B	L	B	L	L	B	"	"	"	"	

See footnotes at end of table III.

TABLE III. Group A inspection for device type 02 - Continued.
Terminal conditions (pins not designated may be high ≥2.0 V or low ≤0.8 V, or open)

Subgroup	Symbol	MIL-STD-883 method	Cases 2,R,S Test no.	1	2	3	4	5	6	7	8	9	10	11	12	13	14	15	16	17	18	19	20	Measured terminal	Test limits Min	Test limits Max	Unit
				SO	$\overline{G1}$	$\overline{G2}$	G/QG	E/QE	C/QC	A/QA	QA'	$\overline{CLR}$	GND	SR	CLK	B/QB	D/QD	F/QF	H/QH	QH'	SL	S1	V_{CC}				
7 T_C = +25°C 12/ 13/	Truth table test	3014	106	B	B	B	X	X	X	X	X	B	GND	A	B	X	X	X	X	X	A	B	5.0 V	All outputs	C	C	
		"	107	B	"	"	L	L	L	L	L	B	GND	"	A	L	L	L	L	L	"	"	"		"	"	
		"	108	A	"	"	"	"	"	L	L	A	"	"	B	"	"	"	"	"	"	"	"		"	"	
		"	109	"	"	"	"	"	"	H	H	"	"	"	A	"	"	"	"	"	"	"	"		"	"	
		"	110	"	"	"	"	"	"	"	"	"	"	"	B	H	"	"	"	"	"	"	"		"	"	
		"	111	"	"	"	"	"	"	"	"	"	"	"	A	"	"	"	"	"	"	"	"		"	"	
		"	112	"	"	"	"	"	"	"	"	"	"	"	B	"	"	"	"	"	"	"	"		"	"	
		"	113	"	"	"	"	"	H	"	"	"	"	"	A	"	"	"	"	"	"	"	"		"	"	
		"	114	"	"	"	"	"	"	"	"	"	"	"	B	"	"	"	"	"	"	"	"		"	"	
		"	115	"	"	"	"	"	"	"	"	"	"	"	A	"	H	"	"	"	"	"	"		"	"	
		"	116	"	"	"	"	"	"	"	"	"	"	"	B	"	"	"	H	"	"	"	"		"	"	
		"	117	"	"	"	"	H	"	"	"	"	"	"	A	"	"	"	"	"	"	"	"		"	"	
		"	118	"	"	"	"	"	"	"	"	"	"	"	B	"	"	"	"	"	"	"	"		"	"	
		"	119	"	"	"	"	"	"	"	"	"	"	"	A	"	"	"	"	"	"	"	"		"	"	
		"	120	"	"	"	"	"	"	"	"	"	"	"	B	"	"	"	"	"	"	"	"		"	"	
		"	121	"	"	"	H	"	"	"	"	"	"	"	A	"	"	"	"	H	"	"	"		"	"	
		"	122	"	"	"	"	"	"	"	"	"	"	"	B	"	"	"	"	"	"	"	"		"	"	
		"	123	B	"	"	"	"	"	"	"	"	"	"	A	"	"	"	"	"	"	"	"		"	"	
		"	124	"	"	"	"	"	"	"	"	"	"	"	B	"	"	"	"	"	"	"	"		"	"	
		"	125	"	"	"	"	"	"	"	"	"	"	"	A	"	"	"	"	"	"	"	"		"	"	
		"	126	"	"	"	"	"	"	"	"	"	"	"	B	"	"	"	"	"	"	"	"		"	"	
		"	127	A	"	"	"	"	"	"	"	"	"	"	A	"	"	"	"	"	"	"	"		"	"	
		"	128	"	"	"	"	"	"	L	L	"	"	"	B	"	"	"	"	"	"	"	"		"	"	
		"	129	"	"	"	"	"	"	"	"	"	"	"	A	"	"	"	"	"	"	"	"		"	"	
		"	130	"	"	"	"	"	"	"	"	"	"	"	B	"	"	"	"	"	"	"	"		"	"	
		"	131	"	"	"	"	"	"	"	"	"	"	"	A	"	"	L	"	"	"	"	"		"	"	
		"	132	"	"	"	"	"	"	"	"	"	"	"	B	"	"	H	"	"	"	"	"		"	"	
		"	133	"	"	"	"	"	"	"	"	"	"	"	A	"	"	L	"	"	"	"	"		"	"	
		"	134	"	"	"	"	"	"	"	"	"	"	"	B	"	"	"	"	"	"	"	"		"	"	
		"	135	"	"	"	"	"	L	"	"	"	"	"	A	"	"	"	"	"	"	"	"		"	"	
		"	136	"	"	"	"	"	"	"	"	"	"	"	B	"	"	"	"	"	"	"	"		"	"	
		"	137	"	"	"	"	"	"	"	"	"	"	"	A	"	"	"	L	"	"	"	"		"	"	
		"	138	"	"	"	"	L	"	"	"	"	"	"	B	"	"	"	"	"	"	"	"		"	"	
		"	139	"	"	"	"	"	"	"	"	"	"	"	A	"	"	"	"	"	"	"	"		"	"	
		"	140	"	"	"	"	"	"	"	"	"	"	"	B	"	"	"	"	"	"	"	"		"	"	
		"	141	"	"	"	"	"	"	"	"	"	"	"	A	"	"	"	"	L	"	"	"		"	"	
		"	142	"	"	"	L	"	"	"	"	"	"	"	B	"	"	"	"	"	"	"	"		"	"	
		"	143	"	"	"	"	"	"	"	"	"	"	"	A	"	"	"	"	"	"	"	"		"	"	
		"	144	"	"	"	"	"	"	"	"	"	"	"	B	"	"	"	"	"	"	"	"		"	"	
		"	145	"	"	"	"	"	"	"	"	"	"	"	A	"	"	"	"	"	L	"	"		"	"	
		"	146	B	"	"	"	"	"	"	"	"	"	"	B	"	"	"	"	"	H	"	"		"	"	
		"	147	"	"	"	"	"	"	"	"	"	"	"	A	"	"	"	"	"	"	"	"		"	"	
		"	148	"	"	"	"	"	"	"	"	"	"	"	B	"	"	"	"	"	"	"	"		"	"	
		"	149	"	"	"	H	"	"	"	"	"	"	"	A	"	"	"	"	"	"	"	"		"	"	
		"	150	"	"	"	"	"	"	"	"	"	"	"	B	"	"	"	"	"	"	"	"		"	"	
		"	151	"	"	"	"	"	"	"	"	"	"	"	A	"	"	"	"	"	"	"	"		"	"	
		"	152	"	"	"	"	"	"	"	"	"	"	"	B	"	"	"	"	H	"	"	"		"	"	
		"	153	"	"	"	"	H	"	"	"	"	"	"	A	"	"	"	"	"	"	"	"		"	"	
		"	154	"	"	"	"	"	"	"	"	"	"	"	B	"	"	"	"	"	"	"	"		"	"	
		"	155	"	"	"	"	"	"	"	"	"	"	"	A	"	"	"	"	"	"	"	"		"	"	
		"	156	"	"	"	"	"	"	"	"	"	"	"	B	"	"	"	"	"	"	"	"		"	"	
		"	157	"	"	"	"	"	H	"	"	"	"	"	A	"	"	"	H	"	"	"	"		"	"	
		"	158	"	"	"	"	"	"	"	"	"	"	"	B	"	"	"	"	"	"	"	"		"	"	
		"	159	"	"	"	"	"	"	"	"	"	"	"	A	"	"	"	"	"	"	"	"		"	"	
		"	160	"	"	"	"	"	"	"	"	"	"	"	B	"	"	H	"	"	"	"	"		"	"	
		"	161	"	"	"	"	"	"	H	H	"	"	"	A	"	"	"	"	"	"	"	"		"	"	
		"	162	"	"	"	"	"	"	"	"	"	"	"	B	"	"	"	"	"	"	"	"		"	"	
		"	163	"	"	"	"	"	"	"	"	"	"	"	A	"	"	"	"	"	"	B	"		"	"	
		"	164	"	"	"	"	"	"	"	"	"	"	"	B	"	"	"	"	"	"	"	"		"	"	
		"	165	"	"	"	"	"	"	"	"	"	"	"	A	"	"	"	"	"	"	"	B		"	"	
		"	166	"	"	"	"	"	"	"	"	"	"	"	B	"	"	"	"	"	"	"	A		"	"	
		"	167	"	"	"	"	"	"	"	"	"	"	"	A	"	"	"	"	"	L	"	"		"	"	
		"	168	"	"	"	"	"	"	"	"	"	"	"	B	"	"	"	"	"	"	"	"		"	"	
		"	169	"	"	"	"	"	"	"	"	"	"	"	A	"	"	"	"	"	"	"	"		"	"	
		"	170	"	"	"	L	"	"	"	"	"	"	"	B	"	"	"	"	L	"	"	"		"	"	

See footnotes at end of table III.

TABLE III. Group A inspection for device type 02 - Continued.
Terminal conditions (pins not designated may be high ≥2.0 V or low ≤0.8 V, or open)

Subgroup	Symbol	MIL-STD-883 method	Cases 2,R,S	1	2	3	4	5	6	7	8	9	10	11	12	13	14	15	16	17	18	19	20		Test limits		Unit
			Test no.	SO	$\overline{G1}$	$\overline{G2}$	G/QG	E/QE	C/QC	A/QA	QA'	$\overline{CLR}$	GND	SR	CLK	B/QB	D/QD	F/QF	H/QH	QH'	SL	S1	V_{CC}	Measured terminal	Min	Max	
7	Truth	3014	171	B	B	B	L	H	H	H	H	A	GND	A	B	H	H	L	L	L	B	A	5.0 V	All	C	C	
T_C = +25°C	table	"	172	"	"	"	"	L	"	"	"	"	"	"	A	"	"	"	"	"	"	"	"	"	outputs	"	"	
12/ 13/	test	"	173	"	"	"	"	"	"	"	"	"	"	"	B	"	"	"	"	"	"	"	"	"	"	"	"	
		"	174	"	"	"	"	"	"	"	"	"	"	"	A	"	L	"	"	"	"	"	"	"	"	"	
		"	175	"	"	"	"	"	"	"	"	"	"	"	B	"	L	"	"	"	"	"	"	"	"	"	
		"	176	"	"	"	"	"	L	"	"	"	"	"	A	"	"	"	"	"	"	"	"	"	"	"	
		"	177	"	"	"	"	"	"	"	"	"	"	"	B	"	"	"	"	"	"	"	"	"	"	"	
		"	178	"	"	"	"	"	"	"	"	"	"	"	A	L	"	"	"	"	"	"	"	"	"	"	
		"	179	"	"	"	"	"	"	"	"	"	"	"	B	"	"	"	"	"	"	"	"	"	"	"	
		"	180	"	"	"	"	"	"	L	L	"	"	"	A	"	"	"	"	"	"	"	"	"	"	"	
		"	181	"	"	"	"	"	"	L	"	"	"	"	B	"	"	"	"	"	"	"	"	"	"	"	
		"	182	A	"	"	X	X	X	X	"	"	"	"	B	X	X	X	X	"	"	A	"	"	"	"	
		"	183	"	"	"	B	A	B	A	"	"	"	"	B	A	B	A	B	"	"	"	"	"	"	"	
		"	184	"	"	"	"	"	"	"	H	"	"	"	A	"	"	"	"	"	"	"	"	"	"	"	
		"	185	"	"	"	"	"	"	"	"	"	"	"	B	"	"	"	"	"	"	"	"	"	"	"	
		"	186	B	"	"	L	H	L	H	"	"	"	"	B	H	L	H	L	"	B	B	"	"	"	"	
		"	187	"	"	"	"	"	"	"	"	"	"	"	A	"	"	"	"	"	A	"	"	"	"	"	
		"	188	"	"	"	"	"	"	"	"	"	"	B	B	"	"	"	"	"	"	"	"	"	"	"	
		"	189	"	"	"	"	"	"	"	"	"	"	"	A	"	"	"	"	"	"	"	"	"	"	"	
		"	190	"	"	"	"	"	"	"	"	"	"	"	B	"	"	"	"	"	"	"	"	"	"	"	
		"	191	A	"	"	"	"	"	"	"	"	"	"	B	"	"	"	"	"	"	"	"	"	"	"	
		"	192	"	"	"	"	L	"	L	L	"	"	"	A	L	"	L	"	"	"	"	"	"	"	"	
		"	193	"	"	"	"	L	"	L	"	"	"	"	B	L	"	L	"	"	"	"	"	"	"	"	
		"	194	B	A	"	X	X	X	X	"	"	"	"	B	X	X	X	X	"	"	"	"	"	"	"	
		"	195	A	"	"	B	B	B	A	"	"	"	"	B	B	B	B	B	"	B	A	"	"	"	"	
		"	196	"	"	"	"	"	"	"	H	"	"	A	A	"	"	"	"	"	"	"	"	"	"	"	
		"	197	"	"	"	"	"	"	"	"	"	"	"	B	"	"	"	"	"	"	"	"	"	"	"	
		"	198	"	"	"	"	"	"	"	"	"	"	"	A	"	"	"	"	"	"	"	"	"	"	"	
		"	199	"	"	"	"	"	"	"	"	"	"	"	B	"	"	"	"	"	"	"	"	"	"	"	
		"	200	"	"	"	"	"	"	"	"	"	"	"	A	"	"	"	"	"	"	"	"	"	"	"	
		"	201	"	"	"	"	"	"	"	"	"	"	"	B	"	"	"	"	"	"	"	"	"	"	"	
		"	202	"	"	"	"	"	"	"	"	"	"	"	A	"	"	"	"	"	"	"	"	"	"	"	
		"	203	"	"	"	"	"	"	"	"	"	"	"	B	"	"	"	"	"	"	"	"	"	"	"	
		"	204	"	"	"	"	"	"	"	"	"	"	"	A	"	"	"	"	"	"	"	"	"	"	"	
		"	205	"	"	"	"	"	"	"	"	"	"	"	B	"	"	"	"	"	"	"	"	"	"	"	
		"	206	"	"	"	"	"	"	"	"	"	"	"	A	"	"	"	"	"	"	"	"	"	"	"	
		"	207	"	"	"	"	"	"	"	"	"	"	"	B	"	"	"	"	"	"	"	"	"	"	"	
		"	208	"	"	"	"	"	"	"	"	"	"	"	A	"	"	"	"	"	"	"	"	"	"	"	
		"	209	"	"	"	"	"	"	"	"	"	"	"	B	"	"	"	"	"	"	"	"	"	"	"	
		"	210	"	"	"	"	"	"	"	"	"	"	"	A	"	"	"	"	"	H	"	"	"	"	"	
		"	211	"	"	"	"	"	"	"	"	"	"	"	B	"	"	"	"	"	"	"	"	"	"	"	
		"	212	B	B	"	H	H	H	H	"	"	"	"	B	H	H	H	H	"	"	B	"	"	"	"	
		"	213	"	"	A	X	X	X	X	"	"	"	"	B	X	X	X	X	"	"	A	"	"	"	"	
		"	214	"	"	"	A	A	A	A	"	"	"	"	B	A	A	A	B	"	"	"	"	"	"	"	
		"	215	"	"	"	"	"	"	"	"	"	"	"	A	"	"	"	"	"	L	"	"	"	"	"	
		"	216	"	"	"	"	"	"	"	"	"	"	"	B	"	"	"	"	"	"	"	"	"	"	"	
		"	217	"	"	"	"	"	"	"	"	"	"	"	A	"	"	"	"	"	"	"	"	"	"	"	
		"	218	"	"	"	"	"	"	"	"	"	"	"	B	"	"	"	"	"	"	"	"	"	"	"	
		"	219	"	"	"	"	"	"	"	"	"	"	"	A	"	"	"	"	"	"	"	"	"	"	"	
		"	220	"	"	"	"	"	"	"	"	"	"	"	B	"	"	"	"	"	"	"	"	"	"	"	
		"	221	"	"	"	"	"	"	"	"	"	"	"	A	"	"	"	"	"	"	"	"	"	"	"	
		"	222	"	"	"	"	"	"	"	"	"	"	"	B	"	"	"	"	"	"	"	"	"	"	"	
		"	223	"	"	"	"	"	"	"	"	"	"	"	A	"	"	"	"	"	"	"	"	"	"	"	
		"	224	"	"	"	"	"	"	"	"	"	"	"	B	"	"	"	"	"	"	"	"	"	"	"	
		"	225	"	"	"	"	"	"	"	"	"	"	"	A	"	"	"	"	"	"	"	"	"	"	"	
		"	226	"	"	"	"	"	"	"	"	"	"	"	B	"	"	"	"	"	"	"	"	"	"	"	
		"	227	"	"	"	"	"	"	"	"	"	"	"	A	"	"	"	"	"	"	"	"	"	"	"	
		"	228	"	"	"	"	"	"	"	"	"	"	"	B	"	"	"	"	"	"	"	"	"	"	"	
		"	229	"	"	"	"	"	"	"	L	"	"	"	A	"	"	"	"	"	"	"	"	"	"	"	
		"	230	"	"	"	"	"	"	"	"	"	"	"	B	"	"	"	"	"	"	"	"	"	"	"	
		"	231	"	"	B	L	L	L	L	"	"	"	"	B	L	L	L	L	"	"	B	"	"	"	"	

See footnotes at end of table III.

TABLE III. Group A inspection for device types 01 and 02 - Continued.
Terminal conditions (pins not designated may be high ≥2.0 V or low ≤0.8 V, or open)

Subgroup	Symbol	MIL-STD-883 method	Cases R,S,2 Test no. 01	Cases R,S,2 Test no. 02	1 SO	2 $\overline{G1}$	3 $\overline{G2}$	4 G/QG	5 E/QE	6 C/QC	7 A/QA	8 QA'	9 $\overline{CLR}$	10 GND	11 SR	12 CLK	13 B/QB	14 D/QD	15 F/QF	16 H/QH	17 QH'	18 SL	19 S1	20 V_{CC}	Measured terminal	Test limits Min	Test limits Max	Unit
8	Same tests and terminal conditions as subgroup 7 except T_C = +125°C and -55°C.																											
9 T_C = +25°C	f_{MAX} 10/		231	232	5.0 V GND	GND "	GND "					OUT	5.0 V "	GND "	IN	IN "					OUT	IN	GND 5.0 V	5.0 V "	CLK to QH' CLK to QA'	30 30		MHz MHz
	t_{PLH1}	3003 Fig. 5	233	234	5.0 V	"	"				OUT		"	"	5.0 V	"							GND	"	CLK to A/QA	4	13	ns
		"	234	235	"	"	"						"	"	"	"	OUT						"	"	CLK to B/QB	"	"	"
		"	235	236	"	"	"			OUT			"	"	"	"							"	"	CLK to C/QC	"	"	"
		"	236	237	"	"	"						"	"	"	"		OUT					"	"	CLK to D/QD	"	"	"
		"	237	238	"	"	"		OUT				"	"	"	"							"	"	CLK to E/QE	"	"	"
		"	238	239	"	"	"						"	"	"	"			OUT				"	"	CLK to F/QF	"	"	"
		"	239	240	"	"	"	OUT					"	"	"	"							"	"	CLK to G/QG	"	"	"
		"	240	241	"	"	"						"	"	"	"				OUT			"	"	CLK to H/QH	"	"	"
	t_{PHL1}	"	241	242	"	"	"				OUT		"	"	GND	"							"	"	CLK to A/QA	7	19	"
		"	242	243	"	"	"						"	"	"	"	OUT						"	"	CLK to B/QB	"	"	"
		"	243	244	"	"	"			OUT			"	"	"	"							"	"	CLK to C/QC	"	"	"
		"	244	245	"	"	"						"	"	"	"		OUT					"	"	CLK to D/QD	"	"	"
		"	245	246	"	"	"		OUT				"	"	"	"							"	"	CLK to E/QE	"	"	"
		"	246	247	"	"	"						"	"	"	"			OUT				"	"	CLK to F/QF	"	"	"
		"	247	248	"	"	"	OUT					"	"	"	"							"	"	CLK to G/QG	"	"	"
		"	248	249	"	"	"						"	"	"	"				OUT			"	"	CLK to H/QH	"	"	"
	t_{PHL2}	"	249	250	"	"	"					OUT	"	"	5.0 V	"								"	CLK to QA'	5	15	"
		"	250	251	"	"	"						"	"	5.0 V	"					OUT			"	CLK to QH'	5	15	"
	t_{PLH2}	"	251	252	"	"	"					OUT	"	"	GND	"								"	CLK to QA'	8	18	"
		"	252	253	"	"	"						"	"	GND	"					OUT			"	CLK to QH'	8	18	"
	t_{PZH1} 11/	"	253	254	GND	IN	GND				OUT			"									GND	"	$\overline{G1}$ to A/QA	6	16	"
		"	254	255	"	"	"							"			OUT						"	"	$\overline{G1}$ to B/QB	"	"	"
		"	255	256	"	"	"			OUT				"									"	"	$\overline{G1}$ to C/QC	"	"	"
		"	256	257	"	"	"							"				OUT					"	"	$\overline{G1}$ to D/QD	"	"	"
		"	257	258	"	"	"		OUT					"									"	"	$\overline{G1}$ to E/QE	"	"	"
		"	258	259	"	"	"							"					OUT				"	"	$\overline{G1}$ to F/QF	"	"	"
		"	259	260	"	"	"	OUT						"									"	"	$\overline{G1}$ to G/QG	"	"	"
		"	260	261	"	"	"							"						OUT			"	"	$\overline{G1}$ to H/QH	"	"	"
	t_{PZL1} 11/	"	261	262	"	"	"				OUT			"									"	"	$\overline{G1}$ to A/QA	8	22	"
		"	262	263	"	"	"							"			OUT						"	"	$\overline{G1}$ to B/QB	"	"	"
		"	263	264	"	"	"			OUT				"									"	"	$\overline{G1}$ to C/QC	"	"	"
		"	264	265	"	"	"							"				OUT					"	"	$\overline{G1}$ to D/QD	"	"	"
		"	265	266	"	"	"		OUT					"									"	"	$\overline{G1}$ to E/QE	"	"	"
		"	266	267	"	"	"							"					OUT				"	"	$\overline{G1}$ to F/QF	"	"	"
		"	267	268	"	"	"	OUT						"									"	"	$\overline{G1}$ to G/QG	"	"	"
		"	268	269	"	"	"							"						OUT			"	"	$\overline{G1}$ to H/QH	"	"	"
	t_{PZH3} 11/	"	269	270	IN	GND	"				OUT			"									"	"	SO to A/QA	7	17	"
		"	270	271	"	"	"							"			OUT						"	"	SO to B/QB	"	"	"
		"	271	272	"	"	"			OUT				"									"	"	SO to C/QC	"	"	"
		"	272	273	"	"	"							"				OUT					"	"	SO to D/QD	"	"	"
		"	273	274	"	"	"		OUT					"									"	"	SO to E/QE	"	"	"
		"	274	275	"	"	"							"					OUT				"	"	SO to F/QF	"	"	"
		"	275	276	"	"	"	OUT						"									"	"	SO to G/QG	"	"	"
		"	276	277	"	"	"							"						OUT			"	"	SO to H/QH	"	"	"

See footnotes at end of table III.

TABLE III. Group A inspection for device types 01 and 02 - Continued.
Terminal conditions (pins not designated may be high $\geq$2.0 V or low $\leq$0.8 V, or open)

Subgroup	Symbol	MIL-STD-883 method	Cases R,S,2 Test no. 01	02	1 SO	2 $\overline{G1}$	3 $\overline{G2}$	4 G/QG	5 E/QE	6 C/QC	7 A/QA	8 QA'	9 $\overline{CLR}$	10 GND	11 SR	12 CLK	13 B/QB	14 D/QD	15 F/QF	16 H/QH	17 QH'	18 SL	19 S1	20 V_{CC}	Measured terminal	Test limits Min	Max	Unit
9 T_C = +25°C	t_{PZL3} 11/	3003 Fig. 5	277	278	IN	GND	GND				OUT			GND									GND	5.0 V	SO to A/QA	8	22	ns
		"	278	279	"	"	"							"			OUT						"	"	SO to B/QB	"	"	"
		"	279	280	"	"	"			OUT				"									"	"	SO to C/QC	"	"	"
		"	280	281	"	"	"							"				OUT					"	"	SO to D/QD	"	"	"
		"	281	282	"	"	"		OUT					"									"	"	SO to E/QE	"	"	"
		"	282	283	"	"	"							"					OUT				"	"	SO to F/QF	"	"	"
		"	283	284	"	"	"	OUT						"									"	"	SO to G/QG	"	"	"
		"	284	285	"	"	"							"						OUT			"	"	SO to H/QH	"	"	"
	t_{PZH4} 11/	"	285	286	GND	"	"				OUT			"									IN	"	S1 to A/QA	7	17	"
		"	286	287	"	"	"							"			OUT						"	"	S1 to B/QB	"	"	"
		"	287	288	"	"	"			OUT				"									"	"	S1 to C/QC	"	"	"
		"	288	289	"	"	"							"				OUT					"	"	S1 to D/QD	"	"	"
		"	289	290	"	"	"		OUT					"									"	"	S1 to E/QE	"	"	"
		"	290	291	"	"	"							"					OUT				"	"	S1 to F/QF	"	"	"
		"	291	292	"	"	"	OUT						"									"	"	S1 to G/QG	"	"	"
		"	292	293	"	"	"							"						OUT			"	"	S1 to H/QH	"	"	"
	t_{PZL4} 11/	"	293	294	"	"	"				OUT			"									"	"	S1 to A/QA	8	22	"
		"	294	295	"	"	"							"			OUT						"	"	S1 to B/QB	"	"	"
		"	295	296	"	"	"			OUT				"									"	"	S1 to C/QC	"	"	"
		"	296	297	"	"	"							"				OUT					"	"	S1 to D/QD	"	"	"
		"	297	298	"	"	"		OUT					"									"	"	S1 to E/QE	"	"	"
		"	298	299	"	"	"							"					OUT				"	"	S1 to F/QF	"	"	"
		"	299	300	"	"	"	OUT						"									"	"	S1 to G/QG	"	"	"
		"	300	301	"	"	"							"						OUT			"	"	S1 to H/QH	"	"	"
	t_{PHZ1} 11/	"	301	302	"	IN	"				OUT			"									GND	"	$\overline{G1}$ to A/QA	1	10	"
		"	302	303	"	"	"							"			OUT						"	"	$\overline{G1}$ to B/QB	"	"	"
		"	303	304	"	"	"			OUT				"									"	"	$\overline{G1}$ to C/QC	"	"	"
		"	304	305	"	"	"							"				OUT					"	"	$\overline{G1}$ to D/QD	"	"	"
		"	305	306	"	"	"		OUT					"									"	"	$\overline{G1}$ to E/QE	"	"	"
		"	306	307	"	"	"							"					OUT				"	"	$\overline{G1}$ to F/QF	"	"	"
		"	307	308	"	"	"	OUT						"									"	"	$\overline{G1}$ to G/QG	"	"	"
		"	308	309	"	"	"							"						OUT			"	"	$\overline{G1}$ to H/QH	"	"	"
	t_{PLZ1} 11/	"	309	310	"	"	"				OUT			"									"	"	$\overline{G1}$ to A/QA	5	15	"
		"	310	311	"	"	"							"			OUT						"	"	$\overline{G1}$ to B/QB	"	"	"
		"	311	312	"	"	"			OUT				"									"	"	$\overline{G1}$ to C/QC	"	"	"
		"	312	313	"	"	"							"				OUT					"	"	$\overline{G1}$ to D/QD	"	"	"
		"	313	314	"	"	"		OUT					"									"	"	$\overline{G1}$ to E/QE	"	"	"
		"	314	315	"	"	"							"					OUT				"	"	$\overline{G1}$ to F/QF	"	"	"
		"	315	316	"	"	"	OUT						"									"	"	$\overline{G1}$ to G/QG	"	"	"
		"	316	317	"	"	"							"						OUT			"	"	$\overline{G1}$ to H/QH	"	"	"
	t_{PHZ3} 11/	"	317	318	IN	GND	"				OUT			"									"	"	SO to A/QA	3	14	"
		"	318	319	"	"	"							"			OUT						"	"	SO to B/QB	"	"	"
		"	319	320	"	"	"			OUT				"									"	"	SO to C/QC	"	"	"
		"	320	321	"	"	"							"				OUT					"	"	SO to D/QD	"	"	"
		"	321	322	"	"	"		OUT					"									"	"	SO to E/QE	"	"	"
		"	322	323	"	"	"							"					OUT				"	"	SO to F/QF	"	"	"
		"	323	324	"	"	"	OUT						"									"	"	SO to G/QG	"	"	"
		"	324	325	"	"	"							"						OUT			"	"	SO to H/QH	"	"	"
	t_{PLZ3} 11/	"	325	326	"	"	"				OUT			"									"	"	SO to A/QA	8	25	"
		"	326	327	"	"	"							"			OUT						"	"	SO to B/QB	"	"	"
		"	327	328	"	"	"			OUT				"									"	"	SO to C/QC	"	"	"
		"	328	329	"	"	"							"				OUT					"	"	SO to D/QD	"	"	"
		"	329	330	"	"	"		OUT					"									"	"	SO to E/QE	"	"	"
		"	330	331	"	"	"							"					OUT				"	"	SO to F/QF	"	"	"
		"	331	332	"	"	"	OUT						"									"	"	SO to G/QG	"	"	"
		"	332	333	"	"	"							"						OUT			"	"	SO to H/QH	"	"	"

See footnotes at end of table III.

TABLE III. Group A inspection for device types 01 and 02 - Continued.
Terminal conditions (pins not designated may be high ≥2.0 V or low ≤0.8 V, or open)

Subgroup	Symbol	MIL-STD-883 method	Cases R,S,2 Test no. 01	02	1	2	3	4	5	6	7	8	9	10	11	12	13	14	15	16	17	18	19	20	Measured terminal	Test limits Min	Max	Unit
					SO	$\overline{G1}$	$\overline{G2}$	G/QG	E/QE	C/QC	A/QA	QA'	$\overline{CLR}$	GND	SR	CLK	B/QB	D/QD	F/QF	H/QH	QH'	SL	S1	V_{CC}				
9 T_C = +25°C	t_{PHZ4} 11/	3003 Fig. 5	333	334	GND	GND	GND				OUT			GND			OUT						IN	5.0 V	S1 to A/QA	3	16	ns
		"	334	335	"	"	"			OUT				"									"	"	S1 to B/QB	"	"	"
		"	335	336	"	"	"		OUT					"				OUT					"	"	S1 to C/QC	"	"	"
		"	336	337	"	"	"							"			OUT						"	"	S1 to D/QD	"	"	"
		"	337	338	"	"	"							"									"	"	S1 to E/QE	"	"	"
		"	338	339	"	"	"		OUT					"					OUT				"	"	S1 to F/QF	"	"	"
		"	339	340	"	"	"							"									"	"	S1 to G/QG	"	"	"
		"	340	341	"	"	"	OUT						"						OUT			"	"	S1 to H/QH	"	"	"
	t_{PLZ4} 11/	"	341	342	"	"	"				OUT			"									"	"	S1 to A/QA	8	25	"
		"	342	343	"	"	"			OUT				"			OUT						"	"	S1 to B/QB	"	"	"
		"	343	344	"	"	"							"									"	"	S1 to C/QC	"	"	"
		"	344	345	"	"	"							"				OUT					"	"	S1 to D/QD	"	"	"
		"	345	346	"	"	"		OUT					"									"	"	S1 to E/QE	"	"	"
		"	346	347	"	"	"							"					OUT				"	"	S1 to F/QF	"	"	"
		"	347	348	"	"	"							"									"	"	S1 to G/QG	"	"	"
		"	348	349	"	"	"	OUT						"						OUT			"	"	S1 to H/QH	"	"	"
	t_{PHL3}	"	349		"	"	"				OUT		IN	"									GND	"	CLR to A/QA	6	22	"
		"	350		"	"	"			OUT			"	"			OUT						"	"	CLR to B/QB	"	"	"
		"	351		"	"	"						"	"									"	"	CLR to C/QC	"	"	"
		"	352		"	"	"						"	"				OUT					"	"	CLR to D/QD	"	"	"
		"	353		"	"	"		OUT				"	"									"	"	CLR to E/QE	"	"	"
		"	354		"	"	"						"	"					OUT				"	"	CLR to F/QF	"	"	"
		"	355		"	"	"						"	"									"	"	CLR to G/QG	"	"	"
		"	356		"	"	"	OUT					"	"						OUT			"	"	CLR to H/QH	"	"	"
	t_{PHL4}	"	357		"	"	"					OUT	"	"									"	"	CLR to QA'	"	"	"
		"	358		"	"	"							"							OUT		"	"	CLR to QH'	"	"	"
10 T_C = +125°C	f_{MAX}	3003 Fig. 5	Same tests and terminal conditions as for subgroup 9, except T_C = +125°C.																							25		MHz
	t_{PLH1}	"																								4	15	ns
	t_{PHL1}	"																								7	25	"
	t_{PLH2}	"																								5	20	"
	t_{PHL2}	"																								8	21	"
	t_{PZH1}	"																								6	21	"
	t_{PZL1}	"																								8	26	"
	t_{PZH3}	"																								7	21	"

See footnotes at end of table III.

TABLE III. Group A inspection e types 01 and 02 - Continued.
Terminal conditions (pins not designated gh ≥2.0 V or low ≤0.8 V, or open)

Subgroup	Symbol	MIL-STD-883 method	Cases R,S,2 Test no. 01	02	1 SO	2 $\overline{G1}$	3 $\overline{G2}$	4 G/QG	5 E/QE	6 C/QC	7 A/QA	8 QA'	9 $\overline{CLR}$	10 GND	11 SR	12 CLK	13 B/QB	14 D/QD	15 F/QF	16 H/QH	17 QH'	18 SL	19 S1	20 V_{CC}	Measured terminal	Test limits Min	Max	Unit
10 T_C = +125°C	t_{PZL3}	3003 Fig. 5																								8	26	ns
	t_{PZH4}	"																								7	21	"
	t_{PZL4}	"																								8	26	"
	t_{PHZ1}	"																								1	12	"
	t_{PLZ1}	"																								5	23	"
	t_{PHZ3}	"			Same tests and terminal conditions as for subgroup 9, except T_C = +125°C.																					3	18	"
	t_{PLZ3}	"																								8	30	"
	t_{PHZ4}	"																								3	18	"
	t_{PLZ4}	"																								8	30	"
	t_{PHL3}	"																								6	29	"
	t_{PHL4}	"																								6	29	"
11	Same tests, limits, and terminal conditions as for subgroup 10, except T_C = -55°C.																											

1/ Apply one pulse minimum, 2.5 V min/5.5 V max; 0 V, prior to measurement.

2/ Apply two pulses minimum, same as 1/

3/ Apply three pulses minimum, same as 1/

4/ Apply four pulses minimum, same as 1/

5/ Apply five pulses minimum, same as 1/

6/ Apply six pulses minimum, same as 1/

7/ Apply seven pulses minimum, same as 1/

8/ Apply eight pulses minimum, same as 1/

9/ Method 3011 shall be used, except the output voltage shall be as specified herein, and the output current shall be operating rather than short circuit current. The output conditions have been chosen to produce a current that closely approximates one-half of the true short circuit current I_{OS}.

10/ f_{MAX} minimum limit specified is the frequency of the clock input pulse. The output frequency shall be one-half of the input clock frequency.

11/ Prior to measurement, the outputs under test shall be placed in the high state for t_{PHZ} and t_{PZH} and in the low state for t_{PLZ} and t_{PZL}.

12/ A = Apply input pulse: 2.5 V min/5.5 V max; 0 V

B = Apply input pulse: 2.5 V min/5.5 V max; 0 V

C = The output voltages shall be either: (1) H ≥2.5 V minimum and L ≤0.4 V maximum when using a high speed checker double comparator; (2) H ≥1.5 V and L ≤1.5 V when using a high speed checker single comparator.

13/ Tests shall be performed in sequence, attributes data only.

14/ I_{IL} limits shall be as follows:

Test		(Min in μA for circuits A	B	C
I_{IL}	SR/SL	0/-200	0/-200	0/-200
	All other	0/-100	0/-200	0/-200

15/ I_O circuits for circuit C shall be -30 to -110 mA.

6.3 Ordering data. The acquisition document should specify the following:

a. Complete part number (see 1.2).

b. Requirements for delivery of one copy of the quality conformance inspection data pertinent to the device inspection lot to be supplied with each shipment by the device manufacturer, if applicable.

c. Requirements for certificate of compliance, if applicable.

d. Requirements for notification of change of product or process to the contracting activity in addition to notification to the qualifying activity, if applicable.

e. Requirements for failure analysis (including required test condition of method 5003 of MIL-STD-883), corrective action, and reporting of results, if applicable.

f. Requirements for product assurance options.

g. Requirements for special carriers, lead lengths, or lead forming, if applicable, these requirements shall not affect the part number. Unless otherwise specified, these requirements shall not apply to direct purchase by or direct shipment to the Government.

h. Requirements for "JAN" marking.

6.4 Abbreviations, symbols, and definitions. The abbreviations, symbols, and definitions used herein are defined in MIL-M-38510, MIL-STD-1331, and as follows:

GND	Electrical ground (common terminal)
I_{IN}	Current-flowing into an input terminal
V_{IN}	Voltage level at an input terminal

6.5 Logistic support. Lead materials and finishes (see 3.3), are interchangeable. Unless otherwise specified, microcircuits acquired for Government logistic support will be acquired to device class B (see 1.2.2), and lead material and finish C (see 3.3). Longer lead lengths and lead forming shall not affect the part number.

6.6 Substitutability. The cross-reference information below is presented for the convenience of users. Microcircuits covered by this specification will functionally replace the listed generic-industry type. Generic-industry microcircuit types may not have equivalent operational performance characteristics across military temperature ranges or reliability factors equivalent to MIL-M-38510 device types and may have slight physical variations in relation to case size. The presence of this information shall not be deemed as permitting substitution of generic-industry types for MIL-M-38510 types or as a waiver of any of the provisions of MIL-M-38510.

Military device type	Generic-industry type
01	54ALS299
02	54ALS323

6.7 Manufacturers' designations. Manufacturers' circuits included in this specification are designated with an "X" as shown in table IV herein.

TABLE IV. Manufacturers' designations.

Device type	Circuits		
	A	B	C
	Texas Instruments	Motorola	National Semiconductor Corp.
01	X		
02	X		

Custodian:
Air Force - 17

Review activities:
Air Force - 11, 19, 85, 99
DLA - ES

Agent:
DLA - ES

Preparing activity:
Air Force - 17

(Project no. 5962-F619)