MILITARY SPECIFICATION

MICROCIRCUITS, DIGITAL, ADVANCED LOW POWER SCHOTTKY TTL, UNIVERSAL MULTIPLEXER WITH THREE-STATE OUTPUTS, MONOLITHIC SILICON

This specification is approved for use by the Department of the Air Force, and is available for use by all Departments and Agencies of the Department of Defense.

1. SCOPE

1.1 Scope. This specification covers the detail requirements for monolithic silicon, advanced low power Schottky TTL, universal multiplexer (three-state) logic microcircuits. Two product assurance classes and a choice of case outlines/lead finishes are provided for each type and are reflected in the complete part number.

1.2 Part number. The part number shall be in accordance with MIL-M-38510.

1.2.1 Device type. The device type shall be as follows:

Device type	Circuit
01	Hex, two input universal multiplexer with 3-state outputs

1.2.2 Device class. The device class shall be the product assurance level as defined in MIL-M-38510.

1.2.3 Case outline. The case outline shall be designated as follows:

Outline letter	MIL-M-38510, appendix C, case outline
K	F-6 (24-lead, 3/8" x 5/8"), flat package
L	D-9 (24-lead, 1/4" x 1-1/4"), dual-in-line package
3	C-4 (28 terminal, .450" x .450"), square chip carrier package

1.3 Absolute maximum ratings:

Supply voltage range - - - - - - - - - - - - - -	-0.5 V dc to 7.0 V dc
Input voltage range- - - - - - - - - - - - - - -	-1.5 V dc at -18 mA to 7.0 V dc
Storage temperature range- - - - - - - - - - - -	-65°C to 150°C
Maximum power dissipation, (P_D) per device 1/-	198 mW
Lead temperature (soldering, 10 seconds) - - -	300°C
Thermal resistance, junction to case (θ_{JC}):	
Case K -	(See MIL-M-38510, appendix C)
Case L -	
Case 3 -	60°C/W 3/
Junction temperature (T_J) 2/ - - - - - - - - - -	175°C

1/ Must withstand the added P_D due to short circuit test (e.g., I_O).
2/ Maximum junction temperature shall not be exceeded except for allowable short duration burn-in screening conditions per method 5004 of MIL-STD-883.
3/ When a thermal resistance value is included in MIL-M-38510, appendix C, it shall supersede the value stated herein.

Beneficial comments (recommendations, additions, deletions) and any pertinent data which may be of use in improving this document should be addressed to: Rome Air Development Center, RBE-2, Griffiss AFB, NY 13441, by using the self-addressed Standardization Document Improvement Proposal (DD Form 1426) appearing at the end of this document or by letter.

1.4 Recommended operating conditions:

Supply voltage- - - - - - - - - - - - - - - - -	4.5 V dc minimum to 5.5 V dc maximum
Minimum high level input voltage (V_{IH})- - -	2.0 V dc
Maximum low level input voltage (V_{IL}) - - -	0.8 V dc
Normalized fanout (each output) 4/- - - - -	10 maximum at low logic level 20 maximum at high logic level
Case operating temperature range (T_C) - - -	-55°C to 125°C

2. APPLICABLE DOCUMENTS

2.1 Government specifications and standards. Unless otherwise specified, the following specifications and standards, of the issue listed in that issue of the Department of Defense Index of Specifications and Standards specified in the solicitation, form a part of this specification to the extent specified herein.

SPECIFICATIONS

MILITARY

MIL-M-38510 - Microcircuits, General Specification for.

STANDARDS

MILITARY

MIL-STD-883 - Test Methods and Procedures for Microelectronics.

(Copies of specifications, standards, handbooks, drawings, and publications required by manufacturers in connection with specific acquisition functions should be obtained from the contracting activity or as directed by the contracting officer.)

2.2 Order of precedence. In the event of a conflict between the text of this specification and the references cited herein, the text of this specification shall take precedence.

3. REQUIREMENTS

3.1 Detail specification. The individual item requirements shall be in accordance with MIL-M-38510, and as specified herein.

3.2 Design, construction, and physical dimensions. The design, construction, and physical dimensions shall be as specified in MIL-M-38510, and herein.

3.2.1 Case outlines. The case outlines shall be as specified in 1.2.3.

3.2.2 Terminal connections and logic diagrams. The terminal connections and logic diagrams shall be as specified on figures 1 and 2.

3.2.3 Truth tables. The truth tables shall be as specified on figure 3.

3.2.4 Schematic circuits. Schematic circuits shall be submitted to the preparing activity prior to inclusion of a manufacturer's device in this specification and shall be submitted to the qualifying activity and agent activity (DESC-ECS) as a prerequisite for qualification. All manufacturers schematics shall be maintained by the agent activity and will be available upon request.

3.3 Lead material and finish. The lead material and finish shall be in accordance with MIL-M-38510 (see 6.4).

4/ Device will fanout in both high and low levels to the specified number of data inputs on the same device type as that being tested.

TABLE I. Electrical performance characteristics.

Test	Symbol	Conditions $-55^{\circ}C \leq T_C \leq +125^{\circ}C$	Device type	Limits Min	Limits Max	Unit
High level output voltage	V_{OH}	V_{CC} = 4.5 V, V_{IH} = 2.0 V, I_{OH} = -1.0 mA, V_{IL} = 0.8 V	01	2.4	---	Vdc
Low level output voltage	V_{OL}	V_{CC} = 4.5 V, V_{IH} = 2.0 V, I_{OL} = +12 mA, V_{IL} = 0.8 V	01	---	0.4	Vdc
Input clamp voltage	V_{IC}	V_{CC} = 4.5 V, I_{IN} = -18 mA, T_C = 25°C	01	---	-1.5	Vdc
Low level input current	I_{IL}	V_{CC} = 5.5 V, V_{IN} = 0.4 V	01	0	-200	µA
High level input current	I_{IH1}	V_{CC} = 5.5 V, V_{IN} = 2.7 V	01	---	20	µA
	I_{IH2}	V_{CC} = 5.5 V, V_{IN} = 7.0 V	01	---	100	µA
Off-state output current, high level voltage applied	I_{OZH}	V_{CC} = 5.5 V, V_O = 2.7 V	01	---	20	µA
Off-state output current, low level voltage applied	I_{OZL}	V_{CC} = 5.5 V, V_O = 0.4 V	01	---	-20	µA
Output current 1/	I_O	V_{CC} = 5.5 V, V_O = 2.25 V	01	-15	-110	mA
Supply current outputs high	I_{CCH}	V_{CC} = 5.5 V, V_{IN} = 4.5 V	01	---	24	mA
Supply current outputs low	I_{CCL}	V_{CC} = 5.5 V, V_{IN} = 0.0 V	01	---	33	mA
Supply current outputs disabled	I_{CCZ}	V_{CC} = 5.5 V	01	---	36	mA
Propagation delay time low to high level output from A or B inverting	t_{PLH1}	V_{CC} = 5.0 V, C_L = 50 pF ±10% R_L = R_1 = 500 Ω	01	4	21	ns
Propagation delay time high to low level output from A or B inverting	t_{PHL1}		01	4	21	ns

See footnote at end of table.

TABLE I. Electrical performance characteristics - Continued.

Test	Symbol	Conditions $-55^{\circ}C \leq T_C \leq +125^{\circ}C$	Device type	Limits Min	Limits Max	Unit
Propagation delay time low to high level output from A or B noninverting	t_{PLH2}	V_{CC} = 5.0 V, C_L = 50 pF ±10% $R_L = R_1$ = 500 Ω	01	4	28	ns
Propagation delay time high to low level output from A or B noninverting	t_{PHL2}		01	4	28	ns
Propagation delay time low to high level output from S0	t_{PLH3}		01	7	37	ns
Propagation delay time high to low level output from S0	t_{PHL3}		01	7	37	ns
Propagation delay time low to high level output from S1	t_{PLH4}		01	7	37	ns
Propagation delay time high to low level output from S1	t_{PHL4}		01	7	37	ns
Propagation delay time low to high level output from COMP	t_{PLH5}		01	6	22	ns
Propagation delay time high to low level output from COMP	t_{PHL5}		01	6	22	ns
Propagation delay time low to high level OP = 0 from A	t_{PLH6}		01	5	45	ns
Propagation delay time high to low level OP = 0 from A	t_{PHL6}		01	5	45	ns
Propagation delay time low to high level OP = 0 from B	t_{PLH7}		01	5	45	ns

TABLE I. Electrical performance characteristics - Continued.

Test	Symbol	Conditions $-55^{\circ}C \leq T_C \leq +125^{\circ}C$	Device type	Limits Min	Limits Max	Unit
Propagation delay time high to low level OP = 0 from B	t_{PHL7}	V_{CC} = 5.0 V, C_L = 50 pF ±10% $R_L = R_1$ = 500 Ω	01	5	45	ns
Propagation delay time low to high level OP = 0 from S0	t_{PLH8}		01	5	30	ns
Propagation delay time high to low level OP = 0 from S0	t_{PHL8}		01	5	30	ns
Propagation delay time low to high level OP = 0 from S1	t_{PLH9}		01	5	30	ns
Propagation delay time high to low level OP = 0 from S1	t_{PHL9}		01	5	30	ns
Enable time to high level output from S0	t_{PZH3}		01	7	38	ns
Enable time to high level output from S1	t_{PZH4}		01	7	38	ns
Enable time to high level OP = 0 from S1	t_{PZH9}		01	7	28	ns
Enable time to low level output from S0	t_{PZL3}		01	7	38	ns
Enable time to low level output from S1	t_{PZL4}		01	7	38	ns
Enable time to low level output from COMP	t_{PZL5}		01	8	27	ns
Enable time to low level OP = 0 from S0	t_{PZL8}		01	6	24	ns
Enable time to low level OP = 0 from S1	t_{PZL9}		01	6	28	ns
Enable time to low level OP = 0 from COMP.	t_{PZL10}		01	9	30	ns

TABLE I. Electrical performance characteristics - Continued.

Test	Symbol	Conditions $-55^{\circ}C \leq T_C \leq +125^{\circ}C$	Device type	Limits Min	Limits Max	Unit
Disable time from high level output from S0	t_{PHZ3}	V_{CC} = 5.0 V, C_L = 50 pF ±10% $R_L = R_1$ = 500 Ω	01	2	29	ns
Disable time from high level output from S1	t_{PHZ4}		01	2	29	ns
Disable time from high level OP = 0 from S1	t_{PHZ9}		01	3	23	ns
Disable time from low level output from S0	t_{PLZ3}		01	2	29	ns
Disable time from low level output from S1	t_{PLZ4}		01	2	29	ns
Disable time from low level output from COMP	t_{PLZ5}		01	6	27	ns
Disable time from low level OP = 0 from S0	t_{PLZ8}		01	11	34	ns
Disable time from low level OP = 0 from S1	t_{PLZ9}		01	3	23	ns
Disable time from low level OP = 0 from COMP	t_{PLZ10}		01	6	24	ns

1/ The output conditions have been chosen to produce a current that closely approximates one half of the true short-circuit output current, I_{OS}.

3.4 Electrical performance characteristics. The electrical performance characteristics are as specified in table I, and apply over the full recommended case operating temperature range, unless otherwise specified.

3.5 Electrical test requirements. The electrical test requirements for each device class shall be the subgroups specified in table II. The electrical tests for each subgroup are described in table III.

3.6 Marking. Marking shall be in accordance with MIL-M-38510.

3.7 Microcircuit group assignment. The devices covered by this specifiation shall be in microcircuit group number 11 (see MIL-M-38510, appendix E).

TABLE II. Electrical test requirements.

MIL-STD-883 test requirements	Subgroups (see table III)	
	Class S devices	Class B devices
Interim electrical parameters (pre burn-in) (method 5004)	1	1
Final electrical test parameters (method 5004)	1*,2,3,7, 9,10,11	1*,2,3,7,9
Group A test requirements (method 5005)	1,2,3,7,8, 9,10,11	1,2,3,7,8, 9,10,11
Group B test requirements (method 5005) subgroup 5	1,2,3,7,8, 9,10,11	N/A
Group C end point electrical parameters (method 5005)	N/A	1,2,3
Additional electrical subgroups for group C periodic inspections	N/A	None
Group D end point electrical parameters (method 5005)	1,2,3	1,2,3

*PDA applies to subgroup 1 (see 4.2c).

4. QUALITY ASSURANCE PROVISIONS

4.1 Sampling and inspection. Sampling and inspection procedures shall be in accordance with MIL-M-38510 and methods 5005 and 5007, as applicable, of MIL-STD-883, except as modified herein.

4.2 Screening. Screening shall be in accordance with method 5004 of MIL-STD-883, and shall be conducted on all devices prior to qualification and quality conformance inspection. The following additional criteria shall apply:

a. Burn-in (method 1015 of MIL-STD-883).

1. Test condition D or E, using the circuit shown on figure 4, or equivalent.

2. T_A = +125°C, minimum.

b. Interim and final electrical test parameters shall be as specified in table II, except interim electrical parameters test prior to burn-in is optional at the discretion of the manufacturer.

c. The percent defective allowable (PDA) shall be as specified in MIL-M-38510.

4.3 Qualification inspection. Qualification inspection shall be in accordance with MIL-M-38510. Inspections to be performed shall be those specified in method 5005 of MIL-STD-883 and herein for groups A, B, C, and D inspections (see 4.4.1 through 4.4.4).

4.4 Quality conformance inspection. Quality conformance inspection shall be in accordance with MIL-M-38510 and as specified herein. Inspections to be performed shall be those specified in method 5005 of MIL-STD-883 and herein for groups A, B, C, and D inspections (see 4.4.1 through 4.4.4).

4.4.1 Group A inspection. Group A inspection shall be in accordance with table I of method 5005 of MIL-STD-883 and as follows:

a. Test requirements shall be as specified in table II herein.

b. Subgroups 4, 5, 6 of table I of method 5005 of MIL-STD-883 shall be omitted.

4.4.2 Group B inspection. Group B inspection shall be in accordance with table II of method 5005 of MIL-STD-883. Electrical parameters shall be as specified in table II herein.

4.4.3 Group C inspection. Group C inspection shall be in accordance with table III of method 5005 of MIL-STD-883 and as follows:

a. End point electrical parameters shall be as specified in table II herein.

b. Steady-state life test (method 1005 of MIL-STD-883) conditions, or equivalent:

(1) Test condition D or E, using the circuit shown on figure 4, or equivalent.

(2) $T_A = +125^\circ C$, minimum.

(3) Test duration: 1,000 hours, except as permitted by method 1005 of MIL-STD-883.

4.4.4 Group D inspection. Group D inspection shall be in accordance with table IV of method 5005 of MIL-STD-883. End point electrical parameters shall be as specified in table II herein.

4.5 Methods of inspection. Methods of inspection shall be specified as follows:

4.5.1 Voltage and current. All voltages given are referenced to the microcircuit ground terminal. Currents given are conventional and positive when flowing into the referenced terminal.

5. PACKAGING

5.1 Packaging requirements. The requirements for packaging shall be in accordance with MIL-M-38510.

6. NOTES

6.1 Intended use. Microcircuits conforming to this specification are intended for use for original equipment design applications and logistic support of existing equipment.

Device type 01
Cases K and L

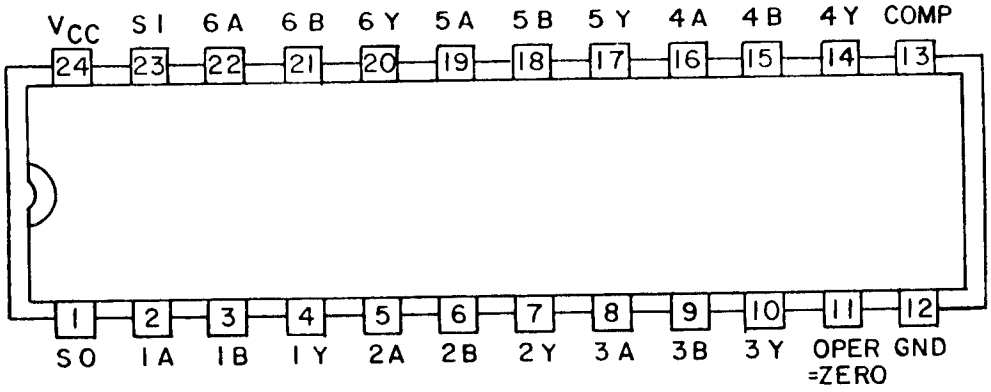

Device type 01
Case 3

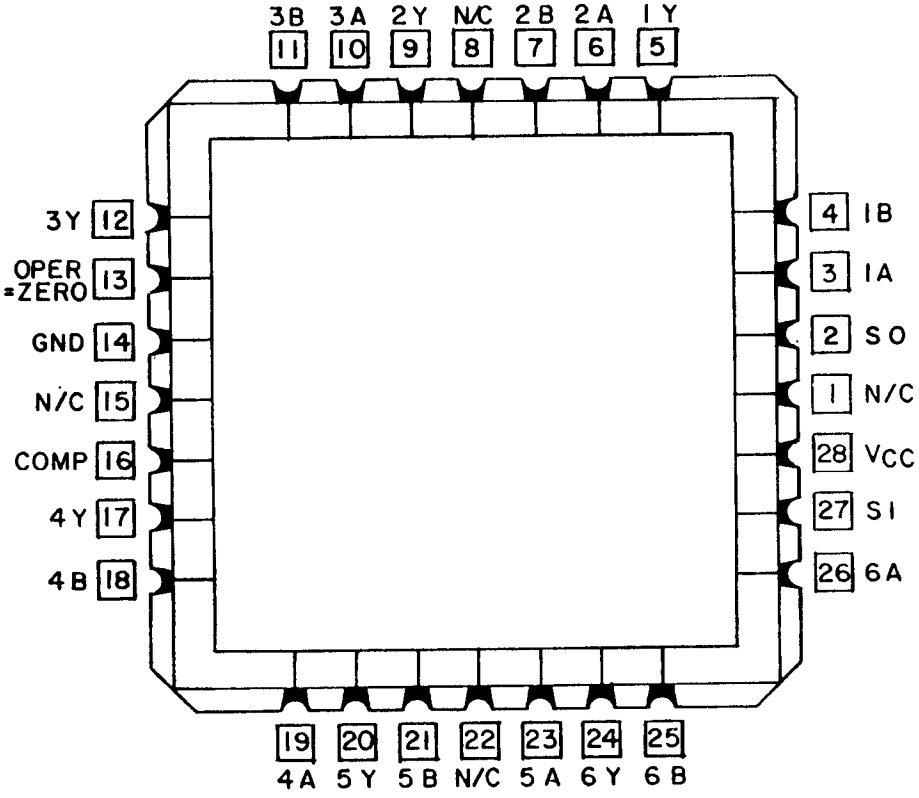

FIGURE 1. Terminal connections.

Device type 01

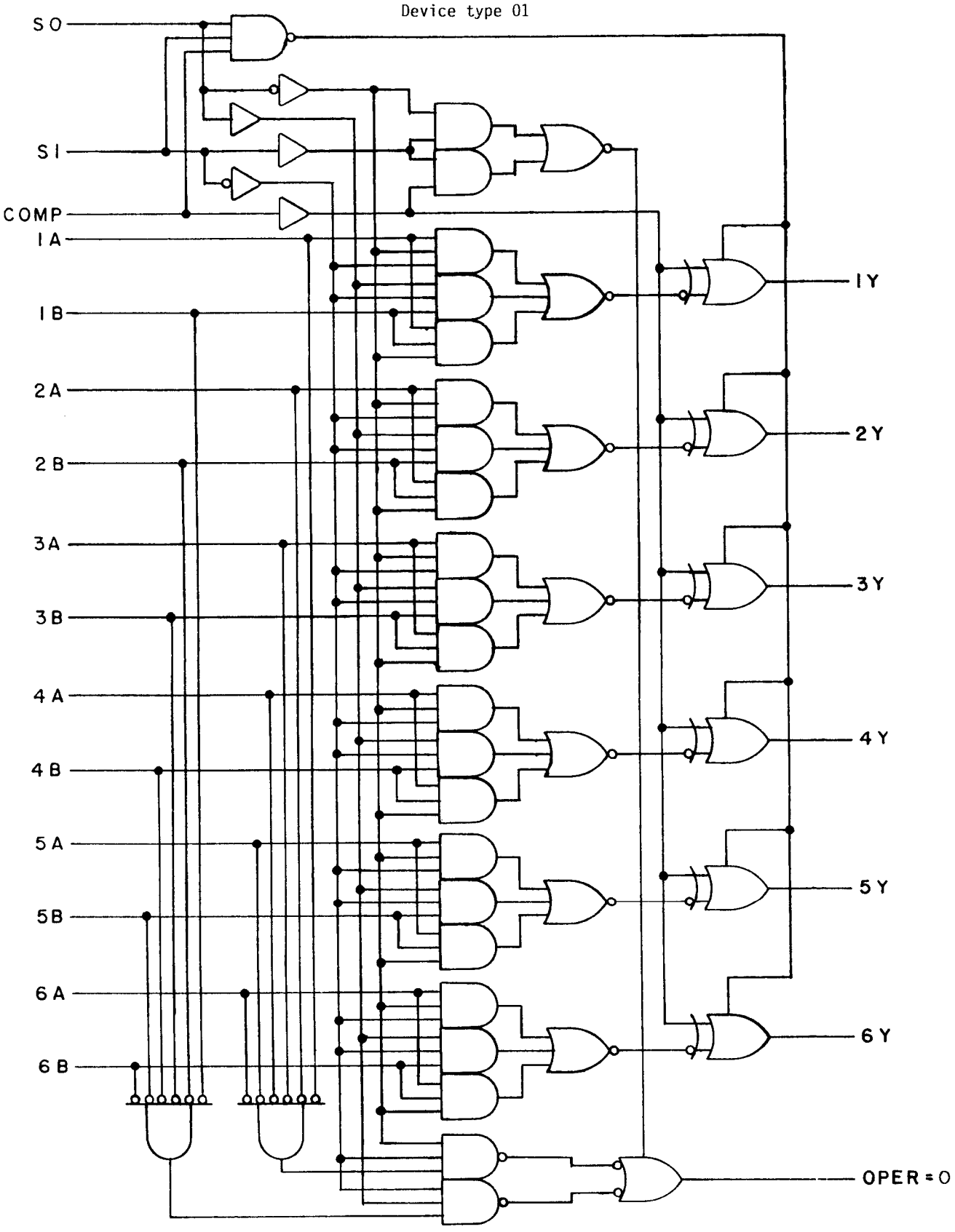

FIGURE 2. Logic diagram.

Device type 01

Comp	S_1	S_0	A	B	Y	Oper =Zero
L ↓	L ↓	L ↓	L L H H	L H L H	L L H H	H H L L
L ↓	L ↓	H ↓	L L H H	L H L H	L H L H	H L H L
L ↓	H ↓	L ↓	L L H H	L H L H	L L L H	Z Z Z Z
L ↓	H ↓	H ↓	X X X X	X X X X	L L L L	L L L L
H ↓	L ↓	L ↓	L L H H	L H L H	H H L L	H H L L
H ↓	L ↓	H ↓	L L H H	L H L H	H L H L	H L H L
H ↓	H ↓	L ↓	L L H H	L H L H	H H H L	Z Z Z Z
H ↓	H ↓	H ↓	X X X X	X X X X	Z Z Z Z	Z Z Z Z

H = high level
L = low level
X = irrelevant
Z = high impedance state

FIGURE 3. Truth table.

Device type 01

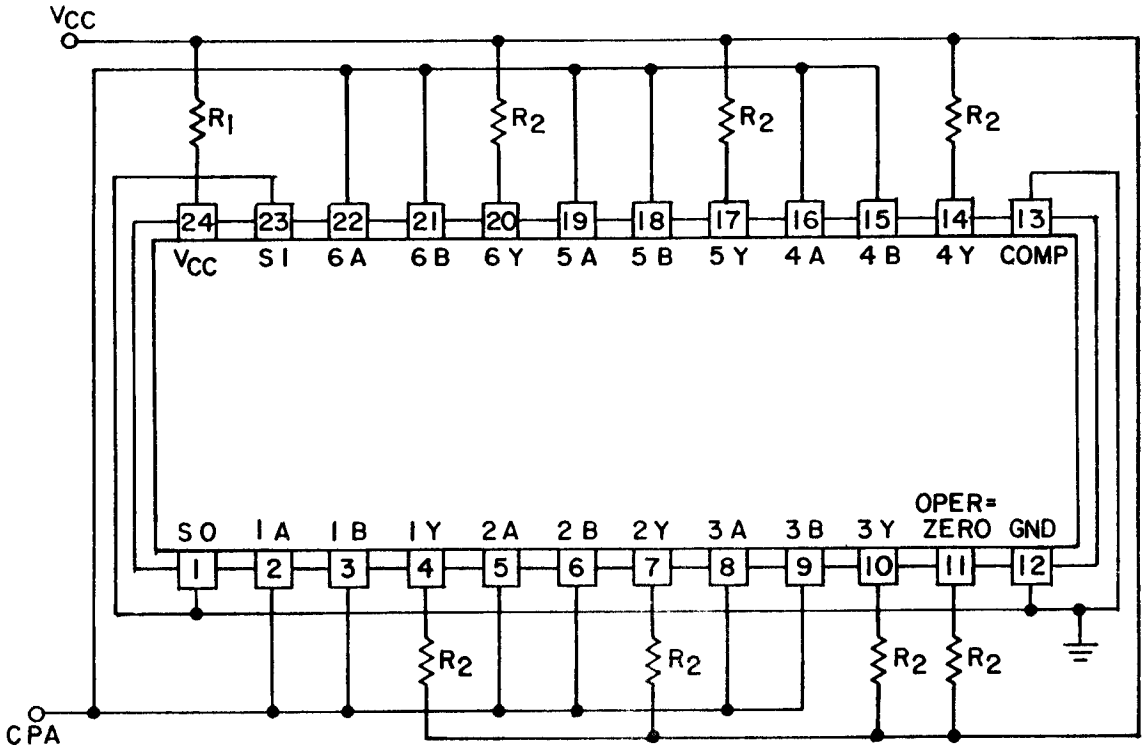

NOTES:
1. CPA = 100 kHz ±50% square wave; duty cycle = 50 ±15%; V_{IL} = -0.5 V minimum to +0.8 V maximum; V_{IH} = 2.0 V minimum to 5.5 v maximum.
2. R2 = 470 kΩ ±5%.
3. V_{CC} and R1 shall be chosen to insure 5.0 V minimum is present at device V_{CC} terminal.

FIGURE 4. Burn-in and life test circuit.

Device type 01

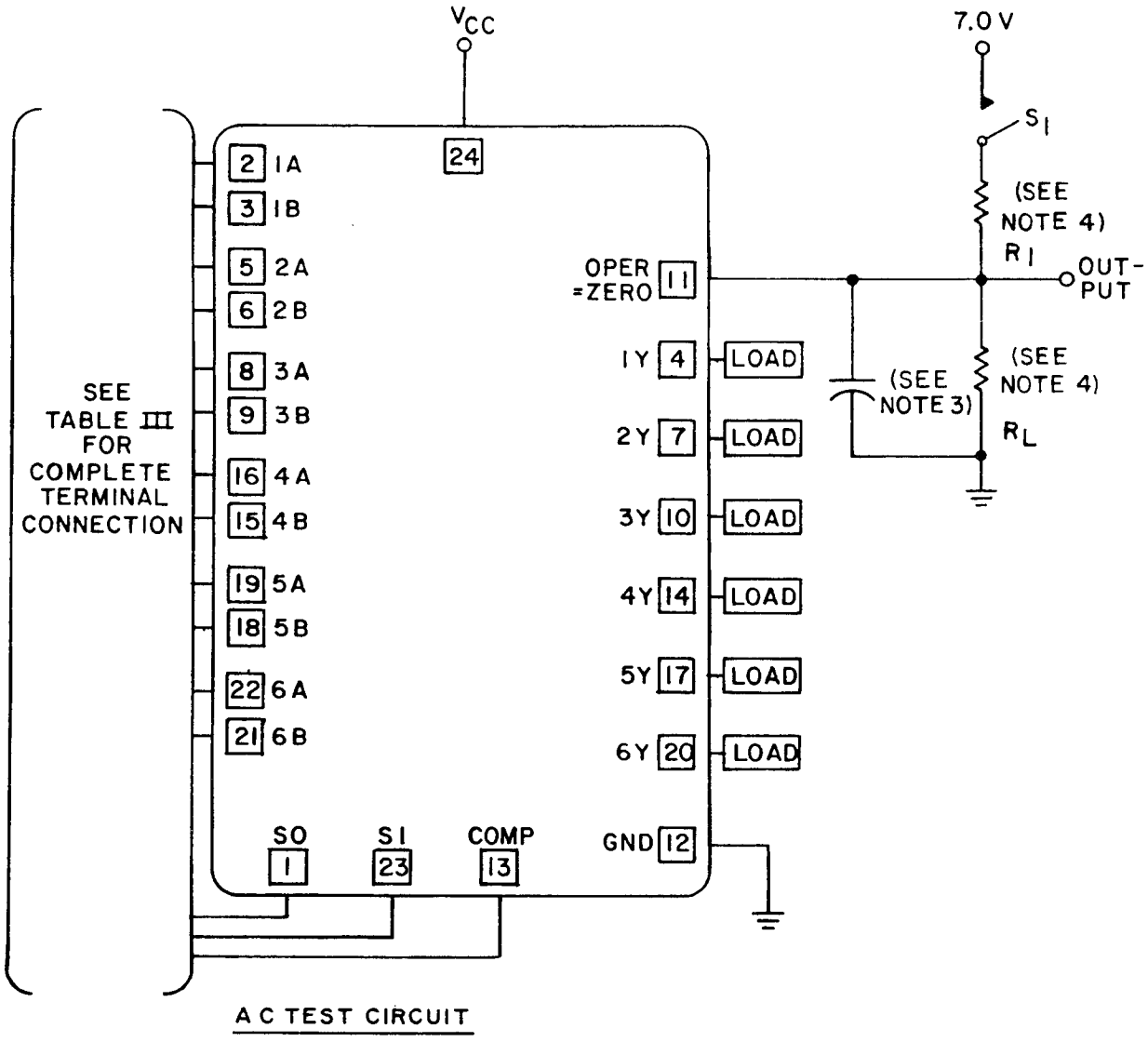

NOTES:
1. Input pulse has the following characteristics: $t_1 = t_0 = 6 \pm 1.5$ ns, PRR $\leq$ 1 MHz, $Z_{OUT} \cong 50\Omega$.
2. Inputs not under test are at ground.
3. C_L = 50 pF ±10%, including scope probe, wiring and stray capacitance.
4. $R_L = R_1 = 499\Omega \pm 1\%$.
5. Voltage measurements are to be made with respect to network ground terminal.

FIGURE 5. Test circuit.

Device type 01

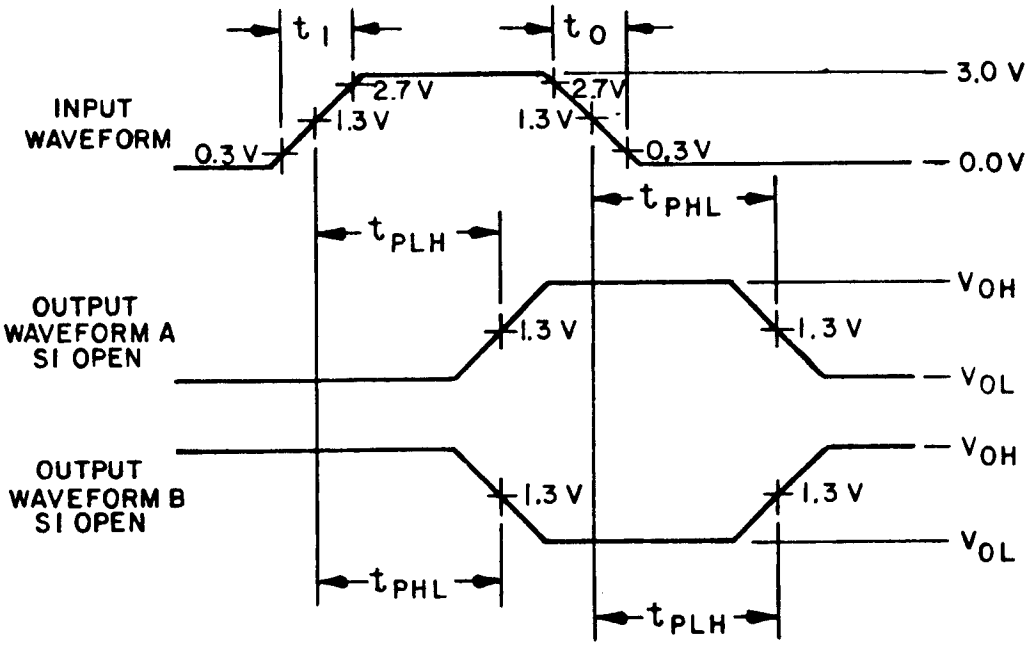

DATA SWITCHING TEST

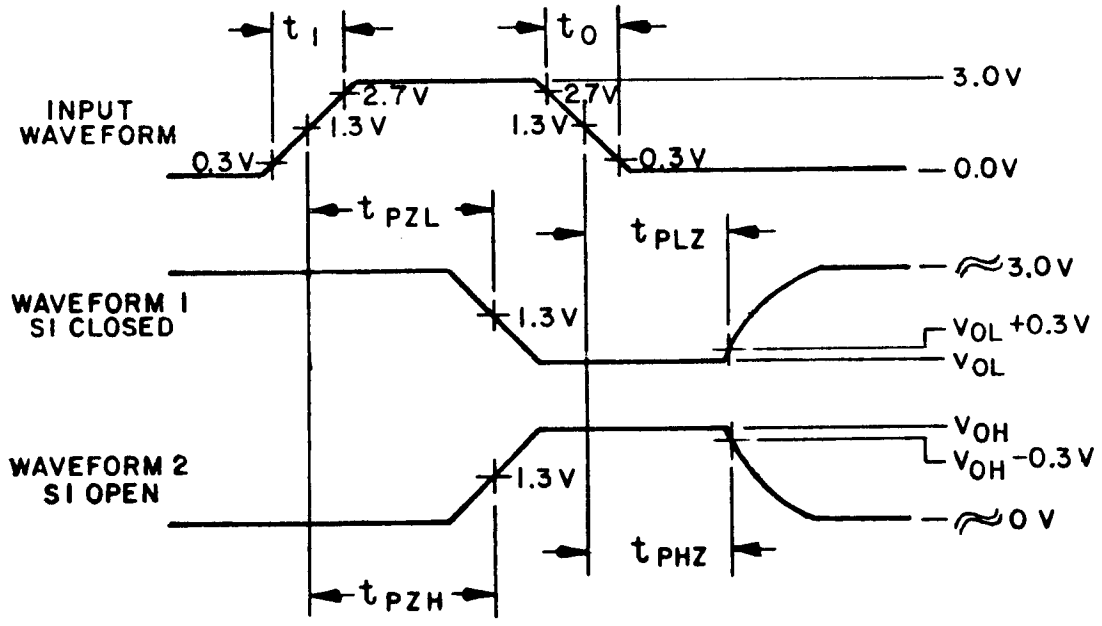

TRI-STATE SWITCHING TEST

FIGURE 6. Data and tri-state wave shapes.

TABLE III. Group A inspection for device type 01.
Terminal conditions (pins not designated may be high ≥2.0 V, low ≤0.8 V, or open).

Subgroup	Symbol	MIL-STD-883 method	Case 3 1/	2	3	4	5	6	7	9	10	11	12	13	14	16	17	18	19	20	21	23	24	25	26	27	28	Measured terminal	Test limits Min	Test limits Max	Unit
			Cases K,L	1	2	3	4	5	6	7	8	9	10	11	12	13	14	15	16	17	18	19	20	21	22	23	24				
			Test no.	SO	1A	1B	1Y	2A	2B	2Y	3A	3B	3Y	Oper = zero	GND	COMP	4Y	4B	4A	5Y	5B	5A	6Y	6B	6A	S1	V_{CC}				
1 T_C = 25°C	V_{OH}	3006	1	0.8 V	0.8 V	0.8 V	-1.0 mA								GND	2.0 V										0.8 V	4.5 V	1Y	2.4		V
		"	2	"				0.8 V	0.8 V	-1.0 mA					"	"										"	"	2Y	"		"
		"	3	"							0.8 V	0.8 V	-1.0 mA		"	"										"	"	3Y	"		"
		"	4	"	0.8 V	0.8		0.8 V	0.8 V		0.8 V	0.8 V		-1.0 mA	"	"		0.8 V	0.8 V		0.8 V	0.8 V		0.8 V	0.8 V	"	"	0 = Z	"		"
		"	5	"											"	"	-1.0 mA	0.8 V	0.8 V							"	"	4Y	"		"
		"	6	"											"	"				-1.0 mA	0.8 V	0.8 V				"	"	5Y	"		"
		"	7	"											"	"							-1.0 mA	0.8 V	0.8 V	"	"	6Y	"		"
	V_{OL}	3007	8	"	2.0 V	2.0 V	+12 mA								"	"										"	"	1Y		0.4	"
		"	9	"				2.0 V	2.0 V	+12 mA					"	"										"	"	2Y		"	"
		"	10	"							2.0 V	2.0 V	+12 mA		"	"										"	"	3Y		"	"
		"	11	"	2.0 V	2.0 V		2.0 V	2.0 V		2.0 V	2.0 V		+12 mA	"	"		2.0 V	2.0 V		2.0 V	2.0 V		2.0 V	2.0 V	"	"	0 = Z		"	"
		"	12	"											"	"	+12 mA	2.0 V	2.0 V							"	"	4Y		"	"
		"	13	"											"	"				+12 mA	2.0 V	2.0 V				"	"	5Y		"	"
		"	14	"											"	"							+12 mA	2.0 V	2.0 V	"	"	6Y		"	"
	V_{IC}		15	-18 mA											"												"	SO		-1.5	"
			16		-18 mA										"												"	1A		"	"
			17			-18 mA									"												"	1B		"	"
			18					-18 mA							"												"	2A		"	"
			19						-18 mA						"												"	2B		"	"
			20								-18 mA				"												"	3A		"	"
			21									-18 mA			"												"	3B		"	"
			22												"	-18 mA											"	COMP		"	"
			23												"			-18 mA									"	4B		"	"
			24												"				-18 mA								"	4A		"	"
			25												"						-18 mA						"	5B		"	"
			26												"							-18 mA					"	5A		"	"
			27												"								-18 mA				"	6B		"	"
			28												"									-18 mA			"	6A		"	"
			29												"										-18 mA		"	S1		"	"
	I_{IL}	3009	30	0.4 V											"												5.5 V	SO	5/	5/	μA
		"	31		0.4 V										"												"	1A	"	"	"
		"	32			0.4 V									"												"	1B	"	"	"
		"	33					0.4 V							"												"	2A	"	"	"
		"	34						0.4 V						"												"	2B	"	"	"
		"	35								0.4 V				"												"	3A	"	"	"
		"	36									0.4 V			"												"	3B	"	"	"
		"	37												"	0.4 V											"	COMP	"	"	"
		"	38												"			0.4 V									"	4B	"	"	"
		"	39												"				0.4 V								"	4A	"	"	"
		"	40												"						0.4 V						"	5B	"	"	"
		"	41												"							0.4 V					"	5A	"	"	"
		"	42												"								0.4 V				"	6B	"	"	"
		"	43												"									0.4 V			"	6A	"	"	"
		"	44												"										0.4 V		"	S1	"	"	"
	I_{IH1}	3010	45	2.7 V											"												"	SO		20	"
		"	46		2.7 V										"												"	1A		"	"
		"	47			2.7 V									"												"	1B		"	"
		"	48					2.7 V							"												"	2A		"	"
		"	49						2.7 V						"												"	2B		"	"
		"	50								2.7 V				"												"	3A		"	"
		"	51									2.7 V			"												"	3B		"	"

See footnotes at end of table.

TABLE III. Group A inspection for device type 01 - Continued.
Terminal conditions (pins not designated may be high ≥2.0 V, low ≤0.8 V, or open).

Subgroup	Symbol	MIL-STD-883 method	Case 3 1/	2	3	4	5	6	7	9	10	11	12	13	14	16	17	18	19	20	21	23	24	25	26	27	28	Measured terminal	Test limits Min	Test limits Max	Unit
			Cases K,L	1	2	3	4	5	6	7	8	9	10	11	12	13	14	15	16	17	18	19	20	21	22	23	24				
			Test no.	SO	1A	1B	1Y	2A	2B	2Y	3A	3B	3Y	Oper = zero	GND	COMP	4Y	4B	4A	5Y	5B	5A	6Y	6B	6A	S1	V_{CC}				
T_C = 25°C	I_{IH1}	3010	52												GND	2.7 V											5.5 V	COMP		20	μA
		"	53												"			2.7 V									"	4B		"	"
		"	54												"				2.7 V								"	4A		"	"
		"	55												"						2.7 V						"	5B		"	"
		"	56												"							2.7 V					"	5A		"	"
		"	57												"									2.7 V			"	6B		"	"
		"	58												"										2.7 V		"	6A		"	"
		"	59												"											2.7 V	"	S1		"	"
	I_{IH2}	"	60	7.0 V											"												"	SO		100	"
		"	61		7.0 V										"												"	1A		"	"
		"	62			7.0 V									"												"	1B		"	"
		"	63					7.0 V							"												"	2A		"	"
		"	64						7.0 V						"												"	2B		"	"
		"	65								7.0 V				"												"	3A		"	"
		"	66									7.0 V			"												"	3B		"	"
		"	67												"	7.0 V											"	COMP		"	"
		"	68												"			7.0 V									"	4B		"	"
		"	69												"				7.0 V								"	4A		"	"
		"	70												"						7.0 V						"	5B		"	"
		"	71												"							7.0 V					"	5A		"	"
		"	72												"									7.0 V			"	6B		"	"
		"	73												"										7.0 V		"	6A		"	"
		"	74												"											7.0 V	"	S1		"	"
	I_{OZH}		75	4.5 V			2.7 V								"	4.5 V										4.5 V	"	1Y		20	"
			76	"						2.7 V					"	"										"	"	2Y		"	"
			77	"									2.7 V		"	"										"	"	3Y		"	"
			78	"										2.7 V	"	"										"	"	O = Z		"	"
			79	"											"	"	2.7 V									"	"	4Y		"	"
			80	"											"	"				2.7 V						"	"	5Y		"	"
			81	"											"	"							2.7 V			"	"	6Y		"	"
	I_{OZL}		82	"			0.4 V								"	"										"	"	1Y		-20	"
			83	"						0.4 V					"	"										"	"	2Y		"	"
			84	"									0.4 V		"	"										"	"	3Y		"	"
			85	"										0.4 V	"	"										"	"	O = Z		"	"
			86	"											"	"	0.4 V									"	"	4Y		"	"
			87	"											"	"					0.4 V					"	"	5Y		"	"
			88	"											"	"							0.4 V			"	"	6Y		"	"
	I_O 2/	3011	89	GND	GND	GND	2.25 V								"	"										GND	"	1Y	-15	-70	mA
		"	90	"				GND	GND	2.25 V					"	"										"	"	2Y	"6/	"6/	"
		"	91	"							GND	GND	2.25 V		"	"										"	"	3Y	"	"	"
		"	92	"	GND	GND		GND	GND		GND	GND			"	"		GND	GND		GND	GND		GND	GND	"	"	O = Z	"	"	"
		"	93	"										2.25 V	"	"	2.25 V	GND	GND							"	"	4Y	"	"	"
		"	94	"											"	"				2.25 V	GND	GND				"	"	5Y	"	"	"
		"	95	"											"	"							2.25 V	GND	GND	"	"	6Y	"	"	"
	I_{CCH}	3005	96	"	GND	GND		GND	GND		GND	GND			"	5.5 V		GND	GND		GND	GND		GND	"	"	"	V_{CC}		24	"
	I_{CCL}	"	97	5.5 V	"	"		"	"		"	"			"	GND		"	"		"	"		"	"	5.5 V	"	V_{CC}		33	"
	I_{CCZ}	"	98	5.5 V	"	"									"	5.5 V										5.5 V	"	V_{CC}		36	"

See footnotes at end of table.

TABLE III. Group A inspection for device type 01 - Continued.
Terminal conditions (pins not designated may be high ≥2.0 V, low ≤0.8 V, or open).

Subgroup	Symbol	MIL-STD-883 method	Case 3 1/	2	3	4	5	6	7	9	10	11	12	13	14	16	17	18	19	20	21	23	24	25	26	27	28	Measured terminal	Test limits Min	Test limits Max	Unit
			Cases K,L	1	2	3	4	5	6	7	8	9	10	11	12	13	14	15	16	17	18	19	20	21	22	23	24				
			Test no.	S0	1A	1B	1Y	2A	2B	2Y	3A	3B	3Y	Oper = zero	GND	COMP	4Y	4B	4A	5Y	5B	5A	6Y	6B	6A	S1	V_{CC}				
2	Same tests, terminal conditions, and limits as subgroup 1 except T_C = 125°C and V_{IC} tests are omitted.																														
3	Same tests, terminal conditions, and limits as subgroup 1 except T_C = -55°C and V_{IC} tests are omitted.																														
7	Truth	3014	99	B	B	B	L	B	B	L	B	B	L	H	GND	B	L	B	B	L	B	B	L	B	B	B	5.0 V	All	3/	3/	
T_C = 25°C	table	4/	100	"	B	A	L	B	A	L	B	A	H	H	"	"	L	A	B	L	A	B	L	A	B	"	"	outputs	"	"	
	tests	"	101	"	A	B	H	A	B	H	A	B	H	L	"	"	H	B	A	H	B	A	H	B	A	"	"	"	"	"	
		"	102	"	A	A	"	A	A	"	A	A	"	L	"	"	"	A	A	"	A	A	"	A	A	"	"	"	"	"	
		"	103	A	B	B	L	B	B	L	B	B	L	H	"	"	L	B	B	L	B	B	L	B	B	"	"	"	"	"	
		"	104	"	B	A	H	B	A	H	B	A	H	L	"	"	H	A	B	H	A	B	H	A	B	"	"	"	"	"	
		"	105	"	A	B	L	A	B	L	A	B	L	H	"	"	L	B	A	L	B	A	L	B	A	"	"	"	"	"	
		"	106	"	A	A	H	A	A	H	A	A	H	L	"	"	H	A	B	H	A	B	H	A	B	"	"	"	"	"	
		"	107	B	B	B	L	B	B	L	B	B	L	X	"	"	L	B	A	L	B	A	L	B	A	A	"	"	"	"	
		"	108	"	B	A	"	B	A	"	B	A	"	"	"	"	"	A	B	"	A	B	"	A	B	"	"	"	"	"	
		"	109	"	A	B	"	A	B	"	A	B	"	"	"	"	H	B	A	H	B	A	H	A	B	"	"	"	"	"	
		"	110	"	A	A	H	A	A	H	A	A	H	"	"	"	L	B	B	L	B	B	L	B	B	"	"	"	"	"	
		"	111	A	B	B	L	B	B	L	B	B	L	L	"	"	"	A	B	"	A	B	"	A	B	"	"	"	"	"	
		"	112	"	B	A	"	B	A	"	B	A	"	"	"	"	"	B	A	"	B	A	"	B	A	"	"	"	"	"	
		"	113	"	A	B	"	A	B	"	A	B	"	"	"	"	"	A	B	"	A	B	"	A	B	"	"	"	"	"	
		"	114	"	A	A	"	A	A	"	A	A	"	"	"	A	H	B	B	H	B	B	H	B	B	B	"	"	"	"	
		"	115	B	B	B	H	B	B	H	B	B	H	H	"	"	H	A	B	H	A	B	H	A	B	"	"	"	"	"	
		"	116	"	B	A	H	B	A	H	B	A	H	L	"	"	L	B	A	L	B	A	L	B	A	"	"	"	"	"	
		"	117	"	A	B	L	A	B	L	A	B	L	L	"	"	L	A	A	L	A	A	L	A	A	"	"	"	"	"	
		"	118	"	A	A	L	A	A	L	A	A	L	L	"	"	H	B	B	H	B	B	H	B	B	"	"	"	"	"	
		"	119	A	B	B	H	B	B	H	B	B	H	H	"	"	L	A	B	L	A	B	L	A	B	"	"	"	"	"	
		"	120	"	B	A	L	B	A	L	B	A	L	H	"	"	H	B	A	H	B	A	H	B	A	"	"	"	"	"	
		"	121	"	A	B	H	A	B	H	A	B	H	H	"	"	L	A	A	L	A	A	L	A	A	"	"	"	"	"	
		"	122	"	A	A	L	A	A	L	A	A	L	L	"	"	H	B	B	H	B	B	H	B	B	"	"	"	"	"	
		"	123	B	B	B	H	B	B	H	B	B	H	X	"	"	"	A	B	"	A	B	"	A	B	A	"	"	"	"	
		"	124	"	B	A	"	B	A	"	B	A	"	"	"	"	"	B	A	"	B	A	"	B	A	"	"	"	"	"	
		"	125	"	A	B	"	A	B	"	A	B	"	"	"	"	L	A	A	L	A	A	L	A	A	"	"	"	"	"	
		"	126	"	A	A	L	A	A	L	A	A	L	"	"																
8	Same tests, terminal conditions, and limits as subgroup 7 except T_C = 125°C and -55°C.																														
9	t_{PLH1}	3003	127	GND	IN	4.5 V	OUT								GND	GND										4.5 V	5.0 V	1A to 1Y	4	18	ns
T_C = 25°C		(Fig 6)	128	"				IN	4.5 V	OUT					"	"										"	"	2A to 2Y	"	"	"
		"	129	"							IN	4.5 V	OUT		"	"	OUT	4.5 V	IN							"	"	3A to 3Y	"	"	"
		"	130	"											"	"				OUT	4.5 V	IN				"	"	4A to 4Y	"	"	"
		"	131	"											"	"							OUT	4.5 V	IN	"	"	5A to 5Y	"	"	"
		"	132	"											"	"										"	"	6A to 6Y	"	"	"
		"	133	"	4.5 V	IN	OUT								"	"										"	"	1B to 1Y	"	"	"
		"	134	"				4.5 V	IN	OUT					"	"										"	"	2B to 2Y	"	"	"
		"	135	"							4.5 V	IN	OUT		"	"	OUT	IN	4.5 V							"	"	3B to 3Y	"	"	"
		"	136	"											"	"				OUT	IN	4.5 V				"	"	4B to 4Y	"	"	"
		"	137	"											"	"							OUT	IN	4.5 V	"	"	5B to 5Y	"	"	"
		"	138	"											"	"												6B to 6Y	"	"	"

See footnotes at end of table.

TABLE III. Group A inspection for device type 01 - Continued.
Terminal conditions (pins not designated may be high ≥2.0 V, low ≤0.8 V, or open).

Subgroup	Symbol	MIL-STD-883 method	Case 3 1/	2	3	4	5	6	7	9	10	11	12	13	14	16	17	18	19	20	21	23	24	25	26	27	28	Measured terminal	Test limits Min	Test limits Max	Unit
			Cases K,L	1	2	3	4	5	6	7	8	9	10	11	12	13	14	15	16	17	18	19	20	21	22	23	24				
			Test no.	S0	1A	1B	1Y	2A	2B	2Y	3A	3B	3Y	Oper = zero	GND	COMP	4Y	4B	4A	5Y	5B	5A	6Y	6B	6A	S1	V_{CC}				
9 T_C = 25°C	t_{PHL1}	3003 (Fig 6)	139	GND	IN	4.5 V	OUT								GND	GND										4.5 V	5.0 V	1A to 1Y	4	18	ns
		"	140	"				IN	4.5 V	OUT					"	"										"	"	2A to 2Y	"	"	"
		"	141	"							IN	4.5 V	OUT		"	"										"	"	3A to 3Y	"	"	"
		"	142	"											"	"	OUT	4.5 V	IN							"	"	4A to 4Y	"	"	"
		"	143	"											"	"				OUT	4.5 V	IN				"	"	5A to 5Y	"	"	"
		"	144	"											"	"							OUT	4.5 V	IN	"	"	6A to 6Y	"	"	"
		"	145	"	4.5 V	IN	OUT								"	"										"	"	1B to 1Y	"	"	"
		"	146	"				4.5 V	IN	OUT					"	"										"	"	2B to 2Y	"	"	"
		"	147	"							4.5 V	IN	OUT		"	"										"	"	3B to 3Y	"	"	"
		"	148	"											"	"	OUT	IN	4.5 V							"	"	4B to 4Y	"	"	"
		"	149	"											"	"				OUT	IN	4.5 V				"	"	5B to 5Y	"	"	"
		"	150	"											"	"							OUT	IN	4.5 V	"	"	6B to 6Y	"	"	"
	t_{PLH2}	"	151	"	IN	4.5 V	OUT								"	4.5 V										"	"	1A to 1Y	"	25	"
		"	152	"				IN	4.5 V	OUT					"	"										"	"	2A to 2Y	"	"	"
		"	153	"							IN	4.5 V	OUT		"	"										"	"	3A to 3Y	"	"	"
		"	154	"											"	"	OUT	4.5 V	IN							"	"	4A to 4Y	"	"	"
		"	155	"											"	"				OUT	4.5 V	IN				"	"	5A to 5Y	"	"	"
		"	156	"											"	"							OUT	4.5 V	IN	"	"	6A to 6Y	"	"	"
		"	157	"	4.5 V	IN	OUT								"	"										"	"	1B to 1Y	"	"	"
		"	158	"				4.5 V	IN	OUT					"	"										"	"	2B to 2Y	"	"	"
		"	159	"							4.5 V	IN	OUT		"	"										"	"	3B to 3Y	"	"	"
		"	160	"											"	"	OUT	IN	4.5 V							"	"	4B to 4Y	"	"	"
		"	161	"											"	"				OUT	IN	4.5 V				"	"	5B to 5Y	"	"	"
		"	162	"											"	"							OUT	IN	4.5 V	"	"	6B to 6Y	"	"	"
	t_{PHL2}	"	163	"	IN	4.5 V	OUT								"	"										"	"	1A to 1Y	"	"	"
		"	164	"				IN	4.5 V	OUT					"	"										"	"	2A to 2Y	"	"	"
		"	165	"							IN	4.5 V	OUT		"	"										"	"	3A to 3Y	"	"	"
		"	166	"											"	"	OUT	4.5 V	IN							"	"	4A to 4Y	"	"	"
		"	167	"											"	"				OUT	4.5 V	IN				"	"	5A to 5Y	"	"	"
		"	168	"											"	"							OUT	4.5 V	IN	"	"	6A to 6Y	"	"	"
		"	169	"	4.5 V	IN	OUT								"	"										"	"	1B to 1Y	"	"	"
		"	170	"				4.5 V	IN	OUT					"	"										"	"	2B to 2Y	"	"	"
		"	171	"							4.5 V	IN	OUT		"	"										"	"	3B to 3Y	"	"	"
		"	172	"											"	"	OUT	IN	4.5 V							"	"	4B to 4Y	"	"	"
		"	173	"											"	"				OUT	IN	4.5 V				"	"	5B to 5Y	"	"	"
		"	174	"											"	"							OUT	IN	4.5 V	"	"	6B to 6Y	"	"	"
	t_{PLH3}	"	175	IN	GND	4.5 V	OUT								"	GND										GND	"	SO to 1Y	7	33	"
		"	176	"				GND	4.5 V	OUT					"	"										"	"	SO to 2Y	"	"	"
		"	177	"							GND	4.5 V	OUT		"	"										"	"	SO to 3Y	"	"	"
		"	178	"											"	"	OUT	4.5 V	GND							"	"	SO to 4Y	"	"	"
		"	179	"											"	"				OUT	4.5 V	GND				"	"	SO to 5Y	"	"	"
		"	180	"											"	"							OUT	4.5 V	GND	"	"	SO to 6Y	"	"	"
	t_{PHL3}	"	181	"	GND	4.5 V	OUT								"	"										"	"	SO to 1Y	7	33	"
		"	182	"				GND	4.5 V	OUT					"	"										"	"	SO to 2Y	"	"	"
		"	183	"							GND	4.5 V	OUT		"	"										"	"	SO to 3Y	"	"	"
		"	184	"											"	"	OUT	4.5 V	GND							"	"	SO to 4Y	"	"	"
		"	185	"											"	"				OUT	4.5 V	GND				"	"	SO to 5Y	"	"	"
		"	186	"											"	"							OUT	4.5 V	GND	"	"	SO to 6Y	"	"	"

See footnotes at end of table.

TABLE III. Group A inspection for device type 01 - Continued.
Terminal conditions (pins not designated may be high ≥2.0 V, low ≤0.8 V, or open).

Subgroup	Symbol	MIL-STD-883 method	Case 3 i/	2	3	4	5	6	7	9	10	11	12	13	14	16	17	18	19	20	21	23	24	25	26	27	28	Measured terminal	Test limits		Unit
			Cases K,L	1	2	3	4	5	6	7	8	9	10	11	12	13	14	15	16	17	18	19	20	21	22	23	24		Min	Max	
			Test no.	S0	1A	1B	1Y	2A	2B	2Y	3A	3B	3Y	Oper = zero	GND	COMP	4Y	4B	4A	5Y	5B	5A	6Y	6B	6A	S1	V_{CC}				
9 T_C = 25°C	t_{PLH4}	3003 (Fig 6)	187	4.5 V	GND	4.5 V	OUT	GND	4.5 V	OUT	GND	4.5 V	OUT		GND	GND	OUT	4.5 V	GND	OUT	4.5 V	GND	OUT	4.5 V	GND	IN	5.0 V	S1 to 1Y	7	33	ns
		"	188	"											"	"										"	"	S1 to 2Y	"	"	"
		"	189	"											"	"										"	"	S1 to 3Y	"	"	"
		"	190	"											"	"										"	"	S1 to 4Y	"	"	"
		"	191	"											"	"										"	"	S1 to 5Y	"	"	"
		"	192	"											"	"										"	"	S1 to 6Y	"	"	"
	t_{PHL4}	"	193	"	GND	4.5 V	OUT	GND	4.5 V	OUT	GND	4.5 V	OUT		"	"	OUT	4.5 V	GND	OUT	4.5 V	GND	OUT	4.5 V	GND	IN	"	S1 to 1Y	7	23	"
		"	194	"											"	"										"	"	S1 to 2Y	"	"	"
		"	195	"											"	"										"	"	S1 to 3Y	"	"	"
		"	196	"											"	"										"	"	S1 to 4Y	"	"	"
		"	197	"											"	"										"	"	S1 to 5Y	"	"	"
		"	198	"											"	"										"	"	S1 to 6Y	"	"	"
	t_{PLH5}	"	199	GND	GND	GND	OUT	GND	GND	OUT	GND	GND	OUT		"	IN	OUT	GND	GND	OUT	GND	GND	OUT	GND	GND	GND	"	COMP to 1Y	6	18	"
		"	200	"											"	"										"	"	COMP to 2Y	"	"	"
		"	201	"											"	"										"	"	COMP to 3Y	"	"	"
		"	202	"											"	"										"	"	COMP to 4Y	"	"	"
		"	203	"											"	"										"	"	COMP to 5Y	"	"	"
		"	204	"											"	"										"	"	COMP to 6Y	"	"	"
	t_{PHL5}	"	205	"	GND	GND	OUT	GND	GND	OUT	GND	GND	OUT		"	"	OUT	GND	GND	OUT	GND	GND	OUT	GND	GND	"	"	COMP to 1Y	"	18	"
		"	206	"											"	"										"	"	COMP to 2Y	"	"	"
		"	207	"											"	"										"	"	COMP to 3Y	"	"	"
		"	208	"											"	"										"	"	COMP to 4Y	"	"	"
		"	209	"											"	"										"	"	COMP to 5Y	"	"	"
		"	210	"											"	"										"	"	COMP to 6Y	"	"	"
	t_{PLH6}	"	211	GND	IN	4.5 V		IN	4.5 V		IN	4.5 V		OUT	GND	"		4.5 V	IN		4.5 V	IN		4.5 V	IN	GND	5.0 V	1A to O=Z	5	37	ns
		"	212	"										"	"	"										"	"	2A to O=Z	"	"	"
		"	213	"										"	"	"										"	"	3A to O=Z	"	"	"
		"	214	"										"	"	"										"	"	4A to O=Z	"	"	"
		"	215	"										"	"	"										"	"	5A to O=Z	"	"	"
		"	216	"										"	"	"										"	"	6A to O=Z	"	"	"
	t_{PHL6}	"	217	"	IN	4.5 V		IN	4.5 V		IN	4.5 V		"	"	"		4.5 V	IN		4.5 V	IN		4.5 V	IN	"	"	1A to O=Z	5	16	"
		"	218	"										"	"	"										"	"	2A to O=Z	"	"	"
		"	219	"										"	"	"										"	"	3A to O=Z	"	"	"
		"	220	"										"	"	"										"	"	4A to O=Z	"	"	"
		"	221	"										"	"	"										"	"	5A to O=Z	"	"	"
		"	222	"										"	"	"										"	"	6A to O=Z	"	"	"

See footnotes at end of table.

TABLE III. Group A inspection for device type 01 - Continued.
Terminal conditions (pins not designated may be high ≥2.0 V, low ≤0.8 V, or open).

Subgroup	Symbol	MIL-STD-883 method	Case 3 1/	2	3	4	5	6	7	9	10	11	12	13	14	16	17	18	19	20	21	23	24	25	26	27	28	Measured terminal	Test limits Min	Test limits Max	Unit
			Cases K,L	1	2	3	4	5	6	7	8	9	10	11	12	13	14	15	16	17	18	19	20	21	22	23	24				
			Test no.	S0	1A	1B	1Y	2A	2B	2Y	3A	3B	3Y	Oper = zero	GND	COMP	4Y	4B	4A	5Y	5B	5A	6Y	6B	6A	S1	V_{CC}				
9 T_C = 25°C	t_{PLH7}	3003 (Fig. 6)	223	4.5 V	4.5 V	IN		4.5 V	IN		4.5 V	IN		OUT	GND	GND										GND	5.0 V	1B to 0=Z	5	37	"
		"	224	"										"	"	"										"	"	2B to 0=Z	"	"	"
		"	225	"										"	"	"										"	"	3B to 0=Z	"	"	"
		"	226	"										"	"	"		IN	4.5 V		IN	4.5 V		IN	4.5 V	"	"	4B to 0=Z	"	"	"
		"	227	"										"	"	"										"	"	5B to 0=Z	"	"	"
		"	228	"										"	"	"										"	"	6B to 0=Z	"	"	"
	t_{PHL7}	"	229	"	4.5 V	IN		4.5 V	IN		4.5 V	IN		"	"	"										"	"	1B to 0=Z	5	37	"
		"	230	"										"	"	"										"	"	2B to 0=Z	"	"	"
		"	231	"										"	"	"										"	"	3B to 0=Z	"	"	"
		"	232	"										"	"	"		IN	4.5 V		IN	4.5 V		IN	4.5 V	"	"	4B to 0=Z	"	"	"
		"	233	"										"	"	"										"	"	5B to 0=Z	"	"	"
		"	234	"										"	"	"										"	"	6B to 0=Z	"	"	"
	t_{PLH8}	"	235	IN	GND	4.5 V		GND	4.5 V		GND	4.5 V		"	"	4.5 V		4.5 V	GND		4.5 V	GND		4.5 V	GND	"	"	S0 to 0=Z	5	23	"
	t_{PHL8}	"	236	IN	"	4.5 V		"	4.5 V		"	4.5 V		"	"	4.5 V		4.5 V	"		4.5 V	"		4.5 V	"	"	"	S0 to 0=Z	5	23	"
	t_{PLH9}	"	237	4.5 V	"	GND		"	GND		"	GND		"	"	GND		GND	"		GND	"		GND	"	IN	"	S1 to 0=Z	5	23	"
	t_{PHL9}	"	238	4.5 V	"	"		"	GND		"	GND		"	"	GND		GND	"		GND	"		GND	"	IN	"	S1 to 0=Z	5	23	"
	t_{PZH3}	"	239	IN	"	"	OUT	GND	GND	OUT	GND	GND	OUT		"	4.5 V										4.5 V	"	S0 to 1Y	7	35	"
		"	240	"											"	"										"	"	S0 to 2Y	"	"	"
		"	241	"											"	"	OUT	GND	GND	OUT	GND	GND	OUT	GND	GND	"	"	S0 to 3Y	"	"	"
		"	242	"											"	"										"	"	S0 to 4Y	"	"	"
		"	243	"											"	"										"	"	S0 to 5Y	"	"	"
		"	244	"											"	"										"	"	S0 to 6Y	"	"	"
	t_{PZH4}	"	245	4.5 V	GND	GND	OUT	GND	GND	OUT	GND	GND	OUT		"	"										IN	"	S1 to 1Y	"	"	"
		"	246	"											"	"										"	"	S1 to 2Y	"	"	"
		"	247	"											"	"										"	"	S1 to 3Y	"	"	"
		"	248	"											"	"	OUT	GND	GND	OUT	GND	GND	OUT	GND	GND	"	"	S1 to 4Y	"	"	"
		"	249	"											"	"										"	"	S1 to 5Y	"	"	"
		"	250	"											"	"										"	"	S1 to 6Y	"	"	"

See footnotes at end of table.

TABLE III. Group A inspection for device type 01 - Continued.
Terminal conditions (pins not designated may be high ≥2.0 V, low ≤0.8 V, or open).

Subgroup	Symbol	MIL-STD-883 method	Case 3 1/	2	3	4	5	6	7	9	10	11	12	13	14	16	17	18	19	20	21	23	24	25	26	27	28	Measured terminal	Test limits Min	Test limits Max	Unit
			Cases K,L	1	2	3	4	5	6	7	8	9	10	11	12	13	14	15	16	17	18	19	20	21	22	23	24				
			Test no.	S0	1A	1B	1Y	2A	2B	2Y	3A	3B	3Y	Oper = zero	GND	COMP	4Y	4B	4A	5Y	5B	5A	6Y	6B	6A	S1	V_{CC}				
9 T_C = 25°C	t_{PZH9}	3003 (Fig 6)	251	GND	GND	GND		GND	GND		GND	GND		OUT	GND	4.5 V		GND	GND		GND	GND		GND	GND	IN	5.0 V	S1 to 0=Z	7	25	ns
	t_{PZL3}	"	252	IN	4.5 V	4.5 V	OUT	4.5 V	4.5 V	OUT	4.5 V	4.5 V	OUT		"	"										4.5 V	"	S0 to 1Y	7	35	"
		"	253	"											"	"										"	"	S0 to 2Y	"	"	"
		"	254	"											"	"										"	"	S0 to 3Y	"	"	"
		"	255	"											"	"	OUT	4.5 V	4.5 V	OUT	4.5 V	4.5 V	OUT	4.5 V	4.5 V	"	"	S0 to 4Y	"	"	"
		"	256	"											"	"										"	"	S0 to 5Y	"	"	"
		"	257	"											"	"										"	"	S0 to 6Y	"	"	"
	t_{PZL4}	"	258	4.5 V	4.5 V	4.5 V	OUT	4.5 V	4.5 V	OUT	4.5 V	4.5 V	OUT		"	"										IN	"	S1 to 1Y	"	"	"
		"	259	"											"	"										"	"	S1 to 2Y	"	"	"
		"	260	"											"	"										"	"	S1 to 3Y	"	"	"
		"	261	"											"	"	OUT	4.5 V	4.5 V	OUT	4.5 V	4.5 V	OUT	4.5 V	4.5 V	"	"	S1 to 4Y	"	"	"
		"	262	"											"	"										"	"	S1 to 5Y	"	"	"
		"	263	"											"	"										"	"	S1 to 6Y	"	"	"
	t_{PZL5}	"	264	"			OUT			OUT			OUT		"	IN										4.5 V	"	COMP to 1Y	8	24	"
		"	265	"											"	"										"	"	COMP to 2Y	"	"	"
		"	266	"											"	"										"	"	COMP to 3Y	"	"	"
		"	267	"											"	"	OUT			OUT			OUT			"	"	COMP to 4Y	"	"	"
		"	268	"											"	"										"	"	COMP to 5Y	"	"	"
		"	269	"											"	"										"	"	COMP to 6Y	"	"	"
	t_{PZL8}	"	270	IN	GND	GND		GND	GND		GND	GND		OUT	"	GND		GND	GND		GND	GND		GND	GND	"	"	S0 to 0=Z	6	20	"
	t_{PZL9}	"	271	GND	4.5 V	4.5 V		4.5 V	4.5 V		4.5 V	4.5 V		"	"	GND		4.5 V	4.5 V		4.5 V	4.5 V		4.5 V	4.5 V	IN	"	S1 to 0=Z	6	25	"
	t_{PZL10}	"	272	4.5 V										"	"	IN										4.5 V	"	COMP to 0=Z	9	25	"
	t_{PHZ3}	"	273	IN	GND	GND	OUT	GND	GND	OUT	GND	GND	OUT		"	4.5 V										"	"	S0 to 1Y	2	23	"
		"	274	"											"	"										"	"	S0 to 2Y	"	"	"
		"	275	"											"	"										"	"	S0 to 3Y	"	"	"
		"	276	"											"	"	OUT	GND	GND	OUT	GND	GND	OUT	GND	GND	"	"	S0 to 4Y	"	"	"
		"	277	"											"	"										"	"	S0 to 5Y	"	"	"
		"	278	"											"	"										"	"	S0 to 6Y	"	"	"
	t_{PHZ4}	"	279	4.5 V	GND	GND	OUT	GND	GND	OUT	GND	GND	OUT		"	"										IN	"	S1 to 1Y	"	"	"
		"	280	"											"	"										"	"	S1 to 2Y	"	"	"
		"	281	"											"	"										"	"	S1 to 3Y	"	"	"
		"	282	"											"	"	OUT	GND	GND	OUT	GND	GND	OUT	GND	GND	"	"	S1 to 4Y	"	"	"
		"	283	"											"	"										"	"	S1 to 5Y	"	"	"
		"	284	"											"	"										"	"	S1 to 6Y	"	"	"
	t_{PHZ9}	"	285	GND	GND	GND		GND	GND		GND	GND		OUT	"	GND		GND	GND		GND	GND		GND	GND	"	"	S1 to 0=Z	3	19	"

See footnotes at end of table.

TABLE III. Group A inspection for device type 01 - Continued.
Terminal conditions (pins not designated may be high ≥2.0 V, low ≤0.8 V, or open).

Subgroup	Symbol	MIL-STD-883 method	Case 3 1/	2	3	4	5	6	7	9	10	11	12	13	14	16	17	18	19	20	21	23	24	25	26	27	28	Measured terminal	Test limits Min	Test limits Max	Unit
			Cases K,L	1	2	3	4	5	6	7	8	9	10	11	12	13	14	15	16	17	18	19	20	21	22	23	24				
			Test no.	SO	1A	1B	1Y	2A	2B	2Y	3A	3B	3Y	Oper = zero	GND	COMP	4Y	4B	4A	5Y	5B	5A	6Y	6B	6A	S1	V_{CC}				
9 T_C = 25°C	t_{PLZ3}	3003 (Fig 6)	286	IN	4.5 V	4.5 V	OUT	4.5 V	4.5 V	OUT	4.5 V	4.5 V	OUT		GND	4.5 V	OUT	4.5 V	4.5 V	OUT	4.5 V	4.5 V	OUT	4.5 V	4.5 V	4.5 V	5.0 V	SO to 1Y	2	23	ns
		"	287	"											"	"										"	"	SO to 2Y	"	"	"
		"	288	"											"	"										"	"	SO to 3Y	"	"	"
		"	289	"											"	"										"	"	SO to 4Y	"	"	"
		"	290	"											"	"										"	"	SO to 5Y	"	"	"
		"	291	"											"	"										"	"	SO to 6Y	"	"	"
	t_{PLZ4}	"	292	4.5 V	4.5 V	4.5 V	OUT	4.5 V	4.5 V	OUT	4.5 V	4.5 V	OUT		"	"	OUT	4.5 V	4.5 V	OUT	4.5 V	4.5 V	OUT	4.5 V	4.5 V	IN	"	S1 to 1Y	"	"	"
		"	293	"											"	"										"	"	S1 to 2Y	"	"	"
		"	294	"											"	"										"	"	S1 to 3Y	"	"	"
		"	295	"											"	"										"	"	S1 to 4Y	"	"	"
		"	296	"											"	"										"	"	S1 to 5Y	"	"	"
		"	297	"											"	"										"	"	S1 to 6Y	"	"	"
	t_{PLZ5}	"	298	"			OUT			OUT			OUT		"	IN	OUT			OUT			OUT			4.5 V	"	COMP to 1Y	6	21	"
		"	299	"											"	"										"	"	COMP to 2Y	"	"	"
		"	300	"											"	"										"	"	COMP to 3Y	"	"	"
		"	301	"											"	"										"	"	COMP to 4Y	"	"	"
		"	302	"											"	"										"	"	COMP to 5Y	"	"	"
		"	303	"											"	"										"	"	COMP to 6Y	"	"	"
	t_{PLZ8}	"	304	IN	4.5 V	4.5 V		4.5 V	4.5 V		4.5 V	4.5 V		OUT	"	GND		4.5 V	4.5 V		4.5 V	4.5 V		4.5 V	4.5 V	"	"	SO to O=Z	11	27	"
	t_{PLZ9}	"	305	GND	"	"		"	"		"	"		"	"	GND		"	"		"	"		"	"	IN	"	S1 to O=Z	3	19	"
	t_{PLZ10}	"	306	4.5 V	"	"		"	"		"	"		"	"	IN		"	"		"	"		"	"	4.5 V	"	COMP to O=Z	6	20	"
10 T_C = +125°C	t_{PLH1}	Same tests, terminal conditions as subgroup 9 except T_C = +125°C.																											4	21	"
	t_{PHL1}																												4	21	"
	t_{PLH2}																												4	28	"
	t_{PHL2}																												4	28	"
	t_{PLH3}																												7	37	"
	t_{PHL3}																												7	37	"
	t_{PLH4}																												7	37	"
	t_{PHL4}																												7	37	"

See footnotes at end of table.

TABLE III. Group A inspection for device type 01 - Continued.
Terminal conditions (pins not designated may be high ≥2.0 V, low ≤0.8 V, or open).

Subgroup	Symbol	MIL-STD-883 method	Case 3 1/	2	3	4	5	6	7	9	10	11	12	13	14	16	17	18	19	20	21	23	24	25	26	27	28	Measured terminal	Test limits		Unit
			Cases K,L	1	2	3	4	5	6	7	8	9	10	11	12	13	14	15	16	17	18	19	20	21	22	23	24		Min	Max	
			Test no.	S0	1A	1B	1Y	2A	2B	2Y	3A	3B	3Y	Oper = zero	GND	COMP	4Y	4B	4A	5Y	5B	5A	6Y	6B	6A	S1	V_{CC}				
10 T_C = +125°C	t_{PLH5}																												6	22	ns
	t_{PHL5}																												6	22	"
	t_{PLH6}																												5	45	"
	t_{PHL6}																												5	45	"
	t_{PLH7}																												5	45	"
	t_{PHL7}																												5	45	"
	t_{PLH8}																												5	30	"
	t_{PHL8}																												5	30	"
	t_{PLH9}																												5	30	"
	t_{PHL9}	Same tests, and terminal conditions as subgroup 9 except T_C = +125°C.																											5	30	"
	t_{PZH3}																												7	38	"
	t_{PZH4}																												7	38	"
	t_{PZH9}																												7	28	"
	t_{PZL3}																												7	38	"
	t_{PZL4}																												7	38	"
	t_{PZL5}																												8	27	"
	t_{PZL8}																												6	24	"
	t_{PZL9}																												6	28	"

See footnotes at end of table.

TABLE III. Group A inspection for device type 01 - Continued.
Terminal conditions (pins not designated may be high ≥2.0 V, low ≤0.8 V, or open).

Subgroup	Symbol	MIL-STD-883 method	Case 3 1/	2	3	4	5	6	7	9	10	11	12	13	14	16	17	18	19	20	21	23	24	25	26	27	28	Measured terminal	Test limits		Unit
			Cases K,L	1	2	3	4	5	6	7	8	9	10	11	12	13	14	15	16	17	18	19	20	21	22	23	24		Min	Max	
			Test no.	S0	1A	1B	1Y	2A	2B	2Y	3A	3B	3Y	Oper = zero	GND	COMP	4Y	4B	4A	5Y	5B	5A	6Y	6B	6A	S1	V_{CC}				
10 T_C = +125°C	t_{PZL10}																												9	30	ns
	t_{PHZ3}																												2	29	"
	t_{PHZ4}																												2	29	"
	t_{PHZ9}																												3	23	"
	t_{PLZ3}	Same tests and terminal conditions as subgroup 9 except T_C = +125°C.																											2	29	"
	t_{PLZ4}																												2	29	"
	t_{PLZ5}																												6	27	"
	t_{PLZ8}																												11	34	"
	t_{PLZ9}																												3	23	"
	t_{PLZ10}																												6	24	"

[illegible] terminal [illegible], and limits as subgroup 10 except T_C = -55°C.

[illegible]

2/ Method 3011 shall be used, except the output voltage shall be as specified herein, and the output current shall be operating rather than short circuit current. The output conditions have been chosen to produce a current that closely approximates one half of the true short circuit output current I_{OS}.

3/ Output voltages shall be either:

a. H = 2.5 V minimum and L = 0.4 V maximum when using a high speed checker double comparator, or

b. H ≥1.5 V and L ≤1.5 V when using a high speed checker single comparator.

4/ A ≥2.5 V and B ≤0.8 V. Tests shall be performed in sequence, attributes data only. X - Irrelevant

5/ I_{IL} limits in μA as follows:

Test	Circuit A	Circuit B	Circuit C
I_{IL}	0/-200	0/-100	0/-100

6/ I_O min/max limit for circuit C shall be: -30/-110 mA.

6.2 Ordering data. The acquisition document should specify the following:

a. Complete part number (see 1.2).

b. Requirements for delivery of one copy of the quality conformance inspection data pertinent to the device inspection lot to be supplied with each shipment by the device manufacturer, if applicable.

c. Requirement for certificate of compliance, if applicable.

d. Requirements for notification of change of product or process to the contracting activity in addition to notification to the qualifying activity, if applicable.

e. Requirements for failure analysis (including required test condition of method 5003 of MIL-STD-883), corrective action, and reporting of results, if applicable.

f. Requirements for product assurance options.

g. Requirements for special carriers, lead lengths or lead forming, if applicable. These requirements shall not affect the part number. Unless otherwise specified these requirements shall not apply to direct purchase by or direct shipment to the Government.

h. Requirement for "JAN" marking.

6.3 Abbreviations, symbols, and definitions. The abbreviations, symbols, and definitions used herein are defined in MIL-M-38510, MIL-STD-1331, and as follows:

GND - - - - - - - - - - - - Ground zero voltage potential.

V_{IN} - - - - - - - - - - - - Voltage level at an input terminal.

I_{IN} - - - - - - - - - - - - Current flowing into an input terminal.

t_{PHZ} - - - - - - - - - - - - Output disable time (of a three-state output) from high level. The time between the specified reference points on the input and output voltage waveforms with the three-state output changing from the defined high level to a high-impedance (off) state.

t_{PLZ} - - - - - - - - - - - - Output disable time (of a three-state output) from low level. The time between the specified reference points on the input and output voltage waveforms with the three-state output changing from the defined low level to a high-impedance (off) state.

t_{PZH} - - - - - - - - - - - - Output enable time (of a three-state output) to high level. The time between the specified reference points on the input and output voltage waveforms with the three-state output changing from a high-impedance (off) state to the defined high level.

t_{PZL} - - - - - - - - - - - - Output enable time (of a three-state output) to low level. The time between the specified reference points on the input and output voltage waveforms with the three-state output changing from a high-impedance (off) state to the defined low level.

6.4 Logistic support. Lead materials and finishes (see 3.3), are interchangeable. Unless otherwise specified, microcircuits acquired for Government logistic support will be acquired to device class B (see 1.2.2), lead material and finish C (see 3.3). Longer length leads and lead forming shall not affect the part number.

6.5 Substitutability. The cross-reference information below is presented for the convenience of users. Microcircuits covered by this specification will functionally replace the listed generic-industry type. Generic-industry microcircuit types may not have equivalent operational performance characteristics across military temperature ranges or reliability factors equivalent to MIL-M-38510 device types and may have slight physical variations in relation to case size. The presence of this information shall not be deemed as permitting substitution of generic-industry types for MIL-M-38510 types or as a waiver of any of the provisions of MIL-M-38510.

Military device type	Generic-industry type
01	54ALS857A

6.6 Manufacturer's designations. Manufacturers' circuits which form a part of this specification are designated with an "X" as shown in table IV herein.

TABLE IV. Manufacturer's designations.

Device type	Circuits		
	A	B	C
	Texas Instruments	Motorola	National
01	X		

6.7 Changes from previous issue. Asterisks are not used in this revision to verify changes with respect to the previous issue, due to the extensiveness of the changes.

Custodian:
Army - ER
Navy - EC
Air Force - 17

Review activities:
Army - AR, MI
Navy - OS, SH, TD
Air Force - 11, 19, 85, 99
DLA - ES

User activities:
Army - SM
Navy - AS, CG, MC

Agent:
DLA - ES

Preparing activity:
Air Force - 17

(Project 5962-0785)