MILITARY SPECIFICATION

MICROCIRCUITS, DIGITAL, BIPOLAR PROGRAMMABLE LOGIC, MONOLITHIC SILICON

This specification is approved for use by the Department of the Air Force, and is available for use by all Departments and Agencies of the Department of Defense.

1. SCOPE

1.1 Scope. This specification covers the detail requirements for monolithic silicon, bipolar, programmable logic microcircuits which employ titanium tungsten (TD-W), platinum silicide, and nichrome resistors as the fusible link or programming element. Two product assurance classes and a choice of case outlines and lead materials and finishes are provided for each type and are reflected in the complete part number. Special test requirements are included in this specification to screen against devices which may contain excess moisture in the package materials or internal atmosphere (see freeze-out test of 4.2.d).

1.2 Part number. The part number shall be in accordance with MIL-M-38510, and as specified herein.

1.2.1 Device type. The device type shall be as follows:

Device type.	Circuit
01	16-input 8-output and-or invert gate array
02	16-input 8-output registered and-or gate array
03	16-input 6-output registered and-or gate array
04	16-input 4-output registered and-or gate array
05	16-input 4-output registered and-or exclusive or array
06	16-input 4-output registered and carry or exclusive or gate array
07	16-input 8-output and-or invert gate array
08	16-input 8-output registered and-or gate array
09	16-input 6-output registered and-or gate array
10	16-input 4-output registered and-or gate array

1.2.2 Device class. The device class shall be the product assurance level as defined in MIL-M-38510.

1.2.3 Case outline. The case outline shall be designated as follows:

Letter	Case outline, (see MIL-M-38510, appendix C)
R	D-8 (20-lead, 1/4" x 1-1/16" dual-in-line package)
2	C-2 (20-terminal, .350" x .350" square CCP)
Y	Figure 1 (20-lead, 3/8" x 3/8" flat package)

1.3 Absolute maximum ratings.

Supply voltage	-0.5 V to +12.0 V
Input voltage range	-1.5 V to +12.0 V
Storage temperature range	-65°C to +150°C
Lead temperature (soldering 10 seconds)	260°C
Thermal resistance, junction-to-case (θ_{JC}) 1/2/	(See MIL-M-38510 appendix C)

1/ Heat sinking is recommended to reduce the junction temperature.
2/ Must withstand the added P_D due to short circuit (e.g., I_{OS}) test.

Beneficial comments (recommendations, additions, deletions) and any pertinent data which may be of use in improving this document should be addressed to: Rome Air Development Center (RBE-2), Griffiss AFB, NY 13441, by using the self-addressed Standardization Document Improvement Proposal (DD Form 1426) appearing at the end of this document or by letter.

Output voltage applied - - - - - - - - - - - - - - -	-1.5 V to +12.0 V
Output sink current- - - - - - - - - - - - - - - - -	100 mA
Maximum power dissipation (P_D) 2/	
Device types 01, 02, 03, 04, 05, 06- - - - - - -	2.0 W
Device types 07, 08, 09, 10- - - - - - - - - - -	1.1 W
Maximum junction temperature (T_J)- - - - - - - - -	175°C

1.4 Recommended operating conditions.

Supply voltage -	4.5 minimum to 5.5 V maximum
Minimum high-level input voltage - - - - - - - - -	2.0 V
Maximum low-level input voltage- - - - - - - - - -	0.8 V
Case operating temperature range - - - - - - - - -	-55° to +125°C

2. APPLICABLE DOCUMENTS

2.1 Government specifications and standards. Unless otherwise specified, the following specifications and standards, of the issue listed in that issue of the Department of Defense Index of Specifications and Standards specified in the solicitation, form a part of this specification to the extent specified herein.

SPECIFICATION

MILITARY

MIL-M-38510 - Microcircuits, General Specification for.

STANDARD

MILITARY

MIL-STD-883 - Test Methods and Procedures for Microelectronics.

(Copies of specifications, standards, handbooks, drawings, and publications required by manufacturers in connection with specific acquisition functions should be obtained from the contracting activity or as directed by the contracting officer.)

2.2 Order of precedence. In the event of a conflict between the text of this specification and the references cited herein, the text of this specification shall take precedence.

3. REQUIREMENTS

3.1 Detail specification. The individual item requirements shall be in accordance with MIL-M-38510, and as specified herein. When manufacturer-programmed devices are delivered to the user, an altered item drawing shall be prepared by the acquiring activity to specify the required program configuration.

3.2 Design, construction, and physical dimensions. The design, construction, and physical dimensions shall be as specified in MIL-M-38510, and herein.

3.2.1 Terminal connections. Terminal connections shall be as specified on figure 2.

3.2.2 Truth table.

3.2.2.1 Unprogrammed devices. The truth table for unprogrammed devices for contracts involving no altered item drawing shall be as specified on figure 3. When required in groups A, B, or C (see 4.4), the devices shall be programmed by the manufacturer prior to test. A minimum of 50 percent of the total number of fuses shall be programmed or to any altered item drawing pattern which programs at least 25 percent of the total number of fuses.

3.2.2.2 Programmed devices. The truth table for programmed devices shall be as specified by the altered item drawing.

TABLE I. Electrical performance characteristics.

Test	Symbol	Conditions 1/ T_C = -55° to +125°C	Device type	Limits Min	Limits Max	Unit
Input clamp voltage	V_{IC}	V_{CC} = 4.5 V, I_I = -18 mA	All	---	-1.5	V
High level output voltage	V_{OH}	V_{CC} = 4.5 V, V_{IL} = 0.0 V V_{IH} = 3.0 V, I_{OH} = -2 mA	All	2.4	---	V
Low level output voltage	V_{OL}	V_{CC} = 4.5 V, V_{IL} = 0.0 V V_{IH} = 3.0 V; I_{OL} = 12 mA	All	---	0.5	V
High level input voltage	V_{IH}	V_{CC} = 5.5 V	All	2.0	---	V
Low level input voltage	V_{IL}	V_{CC} = 5.5 V	All	---	0.8	V
High level input current	I_{IH}	V_{CC} = 5.5 V, V_I = 2.4 V 3/	All	---	25	µA
Low level input current	I_{IL}	V_{CC} = 5.5 V, V_I = 0.4 V 3/	All	---	-0.25	mA
Output short circuit current	I_{OS}	V_{CC} = 5 V, V_O = 0.0 V 2/	All	-30	-250	mA
Input current	I_I	V_{CC} = 5.5 V, V_I = 5.5 V	All	---	1.0	mA
Off-state output current	I_{OZL}	V_{CC} = 5.5 V, V_{IL} = 0.0 V V_{IH} = 3.0 V, V_O = 0.4 V 3/	All	---	-100	µA
Off-state output current	I_{OZH}	V_{CC} = 5.5 V, V_{IL} = 0.0 V V_{IH} = 3.0 V, V_O = 2.4 V 3/	All	---	100	µA
Supply current	I_{CC}	V_{CC} = 5.5 V	01,02, 03,04	---	180	mA
			05	---	225	mA
			06	---	240	mA
			07,08, 09,10	---	90	mA
Propagation delay data input to output	t_{PHL}	See figure 6 4/	01,03, 04	---	30	ns
			05,06	---	45	ns
			07,09, 10	---	50	ns
Propagation delay data input to output	t_{PLH}		01,03, 04	---	30	ns
			05,06	---	45	ns
			07,09, 10	---	50	ns

See footnotes at end of table.

TABLE I. Electrical performance characteristics - Continued.

Test	Symbol	Conditions 1/ T_C = -55° to +125°C	Device type	Limits Min	Limits Max	Unit
Propagation delay high impedance to output high	t_{PZH}	See figure 6 4/	01,03, 04	---	30	ns
			05,06, 07,09, 10	---	45	ns
Propagation delay high impedance to output low	t_{PZL}		01,03, 04	---	30	ns
			05,06, 07,09, 10	---	45	ns
Propagation delay high to high impedance	t_{PHZ}		01,03, 04	---	30	ns
			05,06, 07,09, 10	---	45	ns
Propagation delay low to high impedance	t_{PLZ}		01,03, 04	---	30	ns
			05,06, 07,09, 10	---	45	ns
Propagation delay high impedance to output high (pin 11 to output enable)	t_{PZH}	See figure 6 5/	02,03, 04,05, 06,08, 09,10	---	25	ns
Propagation delay high impedance to output low (pin 11 to output enable)	t_{PZL}		02,03, 04,05, 06,08, 09,10	---	25	ns
Propagation delay output high to high impedance (pin 11 to output disable)	t_{PHZ}		02,03, 04,05, 06,08, 09,10	---	25	ns
Propagation delay output low to high impedance (pin 11 to output disable)	t_{PLZ}		02,03, 04,05, 06,08, 09,10	---	25	ns
Clock to output high	t_{PCH}	See figure 6 5/	02,03, 04	---	25	ns
			05,06, 08,09, 10	---	25	ns

See footnotes at end of table.

TABLE I. Electrical performance characteristics - Continued.

Test	Symbol	Conditions 1/ T_C = -55° to +125°C	Device type	Limits Min	Limits Max	Unit
Clock to output low	t_{PCL}	See figure 6 5/	02,03, 04	---	20	ns
			05,06, 08,09, 10	---	25	ns
Minimum clock pulse width	$t_{P(CL)}$		02,03, 04	20	---	ns
			05,06, 08,09, 10	25	---	ns
Minimum setup time	t_{SU}		02,03, 04	30	---	ns
			05,06	55	---	ns
			08,09, 10	50	---	ns
Minimum hold time	t_H	See figure 6 5/	All	0	---	ns
Maximum clock frequency	f_{MAX}	See figure 6 5/	02,03, 04	---	20	MHz
			05,06	---	12	MHz
			08,09, 10	---	14	MHz

1/ Complete terminal conditions shall be as specified in table III.

2/ Only one output shorted at a time.

3/ I/O terminal leakage is the worst case I_{IX} or I_{OZH}.

4/ Applies to nonregistered outputs only, with internal output enables.

5/ Applies to registered outputs only, with external output enables (pin 11).

3.2.3 Logic diagram. The logic diagram for unprogrammed devices shall be as specified on figure 4.

3.2.4 Case outlines. The case outlines shall be as specified in 1.2.3.

3.3 Lead material and finish. The lead material and finish shall be in accordance with MIL-M-38510 and 6.4 herein.

3.4 Electrical performance characteristics. The electrical performance characteristics are as specified in table I, and apply over the full recommended case operating temperature range, unless otherwise specified.

3.5 Electrical test requirements. Electrical test requirements shall be as specified in table II and (where applicable), the altered item drawing for the applicable device type and device class. The subgroups of table III which constitute the minimum electrical test requirements for screening, qualification, and quality conformance, by device class, are specified in table II.

3.6 Marking. Marking shall be in accordance with MIL-M-38510. For programmed devices, the altered item drawing number shall be added to the marking by the programming activity. At the option of the manufacturer marking of the country of origin may be omitted from the body of the microcircuit but shall be retained on the initial container.

3.7 Processing options. Since the device is capable of being programmed by either the manufacturer or the user to result in a wide variety of configurations, two processing options are provided for selection in the contract, using an altered item drawing.

3.7.1 Unprogrammed device delivered to the user. All testing shall be verified through group A testing as defined in 3.2.2.1, tables II and III. It is recommended that users perform subgroups 7 and 9 after programming to verify the specific program configuration.

3.7.2 Manufacturer-programmed device delivered to the user. All testing requirements and quality assurance provisions herein, including the requirements of the altered item drawing shall be satisfied by the manufacturer prior to delivery.

3.8 Microcircuit group assignment. The devices covered by this specification shall be in microcircuit group number 14 (see MIL-M-38510, appendix E).

TABLE II. Electrical test requirements.

MIL-STD-883 test requirements	Subgroups (see table III)	
	Class S devices	Class B devices
Interim electrical test parameters (pre burn-in) (method 5004)	1	1
Final electrical test parameters (method 5004) for unprogrammed devices	1*,2,3,7*,8	1*,2,3, 7*, 8
Final electrical test parameters (method 5004) for programmed devices	1*,2,3,7*, 8,9,10,11	1*,2,3, 7*,8,9
Group A test requirements (method 5005)	1,2,3,7,8, 9,10,11	1,2,3,7, 8,9,10,11
Group B end point electrical parameters (method 5005)	1,2,3,7,8,9, 10,11	NA
Group C end-point electrical parameters (method 5005)	NA	1,2,3,7, 8
Group D end-point electrical parameters (method 5005)	1,2,3,7,8	1,2,3,7, 8

NOTES:
1. (*) indicates PDA applies to subgroups 1 and 7 (see 4.2c).
2. Any or all subgroups may be combined when using high-speed testers.
3. Subgroup 7 and 8 shall consist of verifying the pattern specified.

4. QUALITY ASSURANCE PROVISIONS

4.1 Sampling and inspection. Sampling and inspection procedures shall be in accordance with MIL-M-38510 and methods 5005 and 5007 of MIL-STD-883, except as modified herein.

4.2 Screening. Screening shall be in accordance with method 5004 of MIL-STD-883, and shall be conducted on all devices prior to qualification, and quality conformance inspection. The following conditional criteria shall apply:

a. Burn-in test (method 1015 of MIL-STD-883). Test condition D using the circuit shown on figure 5, or equivalent.

b. Interim and final electrical test parameters shall be as specified in table II, except interim electrical parameters test prior to burn-in is optional at the discretion of the manufacturer.

c. The percent defective allowable (PDA) shall be as specified in MIL-M-38510.

d. Freeze-out test. This test shall be conducted as a 100 percent screen on all class S devices having nichrome or platinum silicide as the fusing link. Within no more than 24 hours after completion of burn-in and prior to final electrical test, all devices having nichrome or platinum silicide as the fusable link (see 3.7.1 and 3.7.2) shall be subjected to a freeze-out test. If more than 24 hours have elapsed subsequent to the 125°C burn-in exposure, devices shall be conditioned with at least 125°C for a minimum of 5 hours immediately prior to the freeze-out test. When the freeze-out test is performed, the final electrical test parameters shall be completed 96 hours after the freeze-out test. The freeze-out test shall be conducted as follows:

(1) Connect devices in the electrical configuration of figure 7, or in the burn-in configuration of figure 5 with the bias cycled, 3 minutes on and 3 minutes off, throughout the duration of the test.

(2) Reduce device temperature to $T_C = -10° \pm 2°C$ with the bias cycled and maintain at that temperature for a minimum of 5 hours duration.

(3) With the cycled bias maintained, allow T_C to go to room temperature (by removal from the cold chamber or termination of forced cooling but with no forced heating) and retain for a minimum of 19 hours subsequent to the completion of the 5-hour cold soak. T_C shall not exceed 35°C during this period.

(4) Remove bias and subject all devices to subgroups 1, 7 final electrical test to establish continuity of the titanium tungsten resistors and remove all failed devices from the lot. Count them as screening rejects subject to the PDA requirements of 4.2c.

e. All devices processed by the manufacturer to an altered item drawing shall be programmed prior to burn-in.

4.3 Qualification inspection. Qualification inspection shall be in accordance with MIL-M-38510. Inspections to be performed shall be those specified herein for groups A, B, C, and D inspections (see 4.4.1 through 4.4.4). Qualification data for subgroups 7, 8, 9, 10, and 11 shall be by attributes only.

4.3.1 Qualification extension. When authorized by the qualifying activity, for qualification inspection, if a manufacturer qualifies the PAL device with the worst case metal mask which is processed (e.g. same mask sets excluding metal mask) and manufactured on the same certified line to the other PAL device types on this specification, then the other PAL device types may be part I qualified by conducting only Group A electrical tests and any electricals specified as additional group C subgroups and submitting data in accordance with MIL-M-38510, Appendix D (i.e. group B, C and D tests are not required for qualification).

4.4 Quality conformance inspection. Quality conformance inspection shall be in accordance with MIL-M-38510. Inspections to be performed shall be those specified in method 5005 of MIL-STD-883 and herein for groups A, B, C, and D inspections (see 4.4.1 through 4.4.4).

4.4.1 Group A inspection. Group A inspection shall be in accordance with table I of method 5005 of MIL-STD-883 and as follows:

a. Tests shall be as specified in table II.

b. Subgroups 4, 5, and 6 of table I of method 5005 of MIL-STD-883 shall be omitted.

c. For unprogrammed devices, a sample shall be selected to satisfy programmability requirements. Twelve devices shall be submitted to programming (see 3.2.2.1). If more than 2 devices fail to program, the lot shall be rejected. At the manufacturers option, the sample may be increased to 24 total devices with no more than 4 total device failures allowable.

d. For unprogrammed devices, 10 devices from the programmability sample shall be submitted to the requirements of the specified tests of subgroups 1, 2, 3 designated for programmed devices only. If any device fails, the lot shall be rejected.

e. For unprogrammed devices, 10 devices fro the programmability sample shall be submitted to the requirements of group A, subgroups 9, 10, and 11. If more than 2 total devices fail the lot shall be rejected. At the manufacturers option, the sample may be increased to 20 total devices with no more than 4 total device failures allowable.

4.4.2 Group B inspection. Group B inspection shall be in accordance with table II of method 5005 of MIL-STD-883.

a. Class S devices selected for testing in subgroup 5 (table IIa of method 5005 of MIL-STD-883) shall be programmed in accordance with 3.2.2.

b. Electrical parameters shall be as specified in table II herein.

c. Steady state life test for class S devices shall be in accordance with table IIa (subgroup 5) of method 5005 of MIL-STD-883 using the circuit submitted to the qualifying activity for approval. If the alternate burn-in conditions are used, the circuit on figure 5 or equivalent shall be used.

4.4.3 Group C inspection. Group C inspection shall be in accordance with table III of method 5005 of MIL-STD-883 and as follows:

a. End-point electrical parameters shall be as specified in table II.

b. Steady state life test (method 1005 of MIL-STD-883) conditions:

(1) Test condition D, using the circuit shown on figure 5.

(2) T_A = 125°C minimum.

(3) Test duration: 1,000 hours except, as permitted by appendix B of MIL-M-38510 and method 1005 of MIL-STD-883.

c. For qualification, at least 50 percent of the sample selected for testing in subgroup 1 shall be programmed (see 3.2.2). For quality conformance inspection, the programmability sample (see 4.4.1c) shall be included in the subgroup 1 tests.

SYMBOL	INCHES MIN	INCHES MAX	MILLIMETERS MIN	MILLIMETERS MAX	NOTES
A	.006	.090	.15	2.29	
b	.015	.019	3.81	.48	5
c	.003	.006	.08	.15	5
D	.37	.41	9.40	10.41	3
E	.37	.41	9.40	10.41	
					3
E_2	.130		3.30		
E_3	.030		.76		11
e	.050 BSC		1.27 BSC		4, 6
k					10
L		.305		7.75	
Q	.010	.040	.25	1.02	2
					7, 8
S_2	.005		.13		10
α	30	90	30	90	10, 11

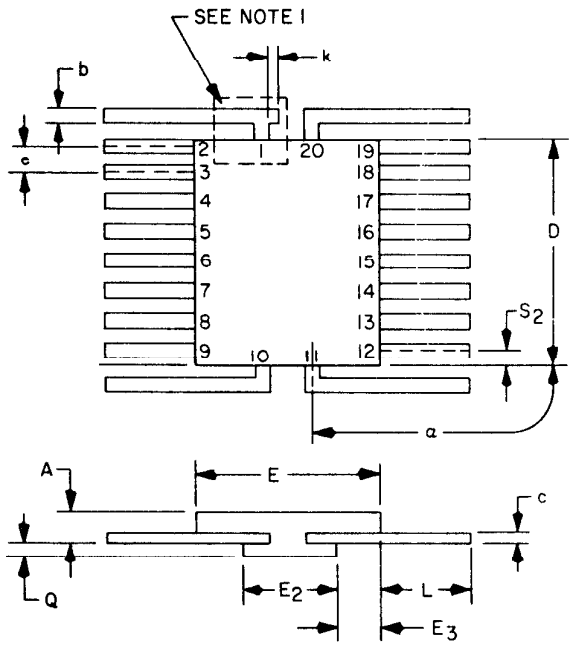

NOTES:

1. Index area; a notch or a pin one identification mark shall be located adjacent to pin one and shall be located within the shaded area shown. The manufacturer's identification shall not be used as a pin one identification mark. Alternatively, a tab (dimension k) may be used to identify pin one.
2. Dimension Q shall be measured at the point of exit of the lead from the body. Dimension Q shall be .0085 (.216 mm) minimum when lead finish A is applied.
3. This dimension allows for off-center lid, meniscus and glass overrun.
4. The basic pin spacing is .050 (1.25 mm) between centerlines. Each pin centerline shall be located within .005 (.13 mm) of its exact logitudinal position relative to pins 1 and 20.
5. All leads - Increase maximum limit by .003 (.08 mm) measured at the center of the flat, when lead finish A is applied.
6. Eighteen spaces.
7. Applies to all four corners (leads number 2, 7, 12 and 17).
8. Dimension S_1 (see 40.3) may be .000 (.00 mm) if leads number 2, 9, 12 and 19 bend toward the cavity of the package within one leads width from the point of entry of the lead into the body. 40.5 shall apply for bottom or side brazed lead configurations.
9. Optional, see note 1. If a pin one identification mark is used in addition to this tab, the minimum limit of dimension k does not apply.
10. Applies to leads number 1, 10, 11 and 20.
11. Lead configuration is optional within dimension E except dimensions b and c apply (see 40.2 of MIL-M-38510, Appendix C).

FIGURE 1. Case outline Y (20 lead, 3/8" X 3/8" flat pack.

Device Type 01 and 07
Cases R and Y

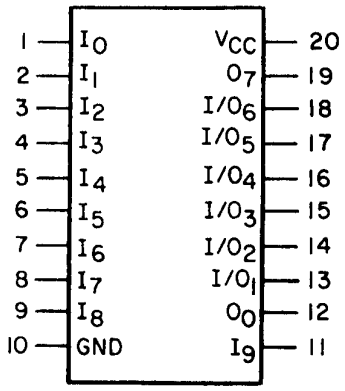

Device Type 02 and 08
Cases R and Y

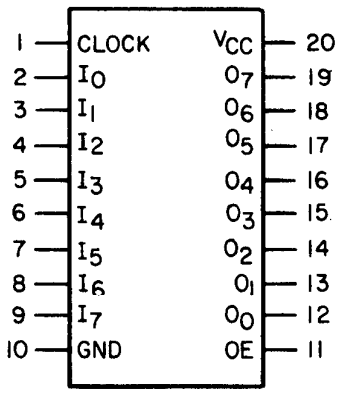

Device Type 01 and 07
Case 2

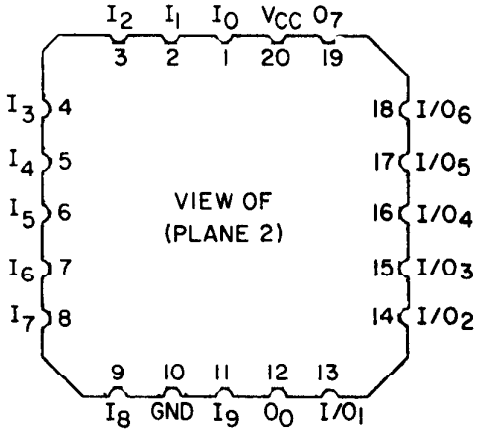

Option A with active terminals on plane 1.

Device Type 02 and 08
Case 2

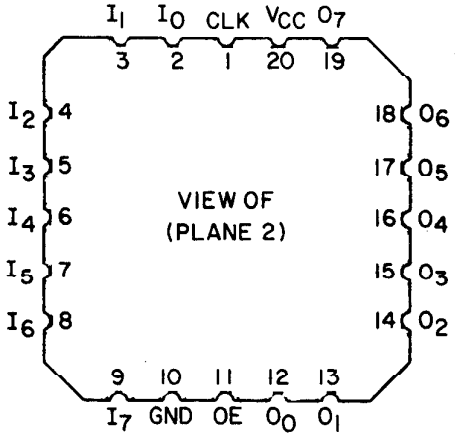

Option A with active terminals on plane 1.

FIGURE 2. Terminal connections.

Device Type 03 and 09
Cases R and Y

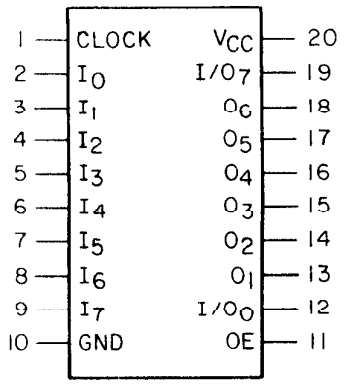

Device Type 04 and 10
Cases R and Y

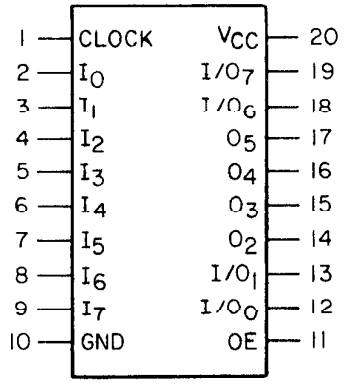

Device type 03 and 09
Case 2

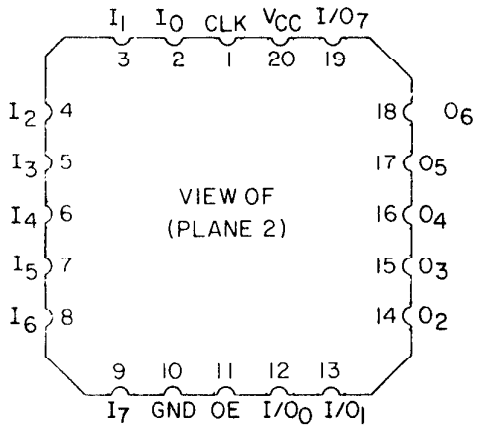

Option A with active terminals on plane 1.

Device type 04 and 10
Case 2

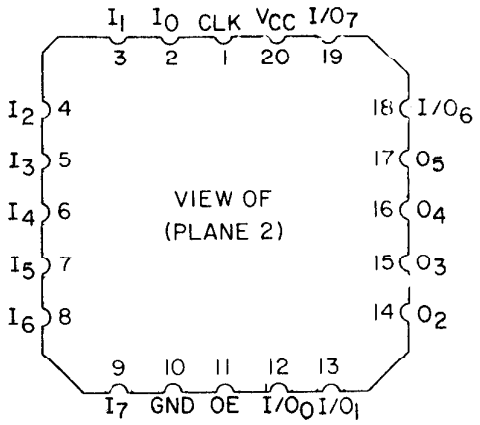

Option A with active terminals on plane 1.

FIGURE 2. Terminal connections - Continued.

Device Type 05

Cases R and Y

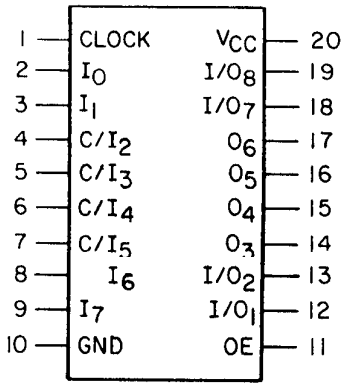

Device Type 06

Cases R and Y

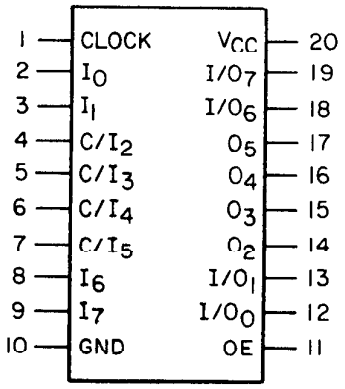

Device Type 05

Case 2

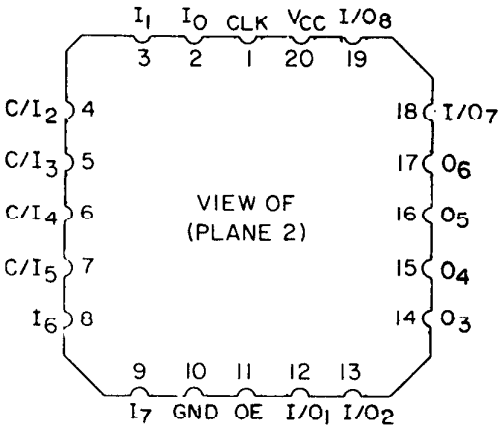

Option A with active terminals on plane 1.

Device Type 06

Case 2

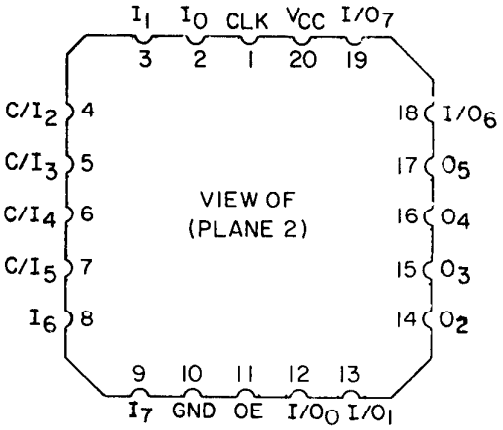

Option A with active terminals on plane 1.

FIGURE 2. Terminal connections - Continued.

Device Type 01 and 07

TRUTH TABLE																	
INPUTS										OUTPUTS							
I_9	I_8	I_7	I_6	I_5	I_4	I_3	I_2	I_1	I_0	O_7	I/O_6	I/O_5	I/O_4	I/O_3	I/O_2	I/O_1	O_0
X	X	X	X	X	X	X	X	X	X	Z	Z	Z	Z	Z	Z	Z	Z

Device Type 02 and 08

TRUTH TABLE																	
INPUTS										OUTPUTS							
OE	I_7	I_6	I_5	I_4	I_3	I_2	I_1	I_0	CLK	O_7	O_6	O_5	O_4	O_3	O_2	O_1	O_0
H	X	X	X	X	X	X	X	X	CLK	Z	Z	Z	Z	Z	Z	Z	Z
L	X	X	X	X	X	X	X	X	CLK	H	H	H	H	H	H	H	H

Device Type 03 and 09

TRUTH TABLE																	
INPUTS										OUTPUTS							
OE	I_7	I_6	I_5	I_4	I_3	I_2	I_1	I_0	CLK	I/O7	O_6	O_5	O_4	O_3	O_2	O_1	I/O_0
H	X	X	X	X	X	X	X	X	CLK	Z	Z	Z	Z	Z	Z	Z	Z
L	X	X	X	X	X	X	X	X	CLK	Z	H	H	H	H	H	H	Z

Device Type 04 and 10

TRUTH TABLE																	
INPUTS										OUTPUTS							
OE	I_7	I_6	I_5	I_4	I_3	I_2	I_1	I_0	CLK	I/O_7	I/O_6	O_5	O_4	O_3	O_2	I/O_1	I/O_0
H	X	X	X	X	X	X	X	X	CLK	Z	Z	Z	Z	Z	Z	Z	Z
L	X	X	X	X	X	X	X	X	CLK	Z	Z	H	H	H	H	Z	Z

FIGURE 3. Truth tabel (unprogrammed).

Device Type 05

TRUTH TABLE																	
INPUTS										OUTPUTS							
OE	I_7	I_6	C/I_5	C/I_4	C/I_3	C/I_2	I_1	I_0	CLK	I/O_8	I/O_7	O_6	O_5	O_4	O_3	I/O_2	I/O_1
L	X	X	X	X	X	X	X	X	CLK	Z	Z	H	H	H	H	Z	Z
H	X	X	X	X	X	X	X	X	CLK	Z	Z	Z	Z	Z	Z	Z	Z

Device Type 05

TRUTH TABLE																	
INPUTS										OUTPUTS							
OE	I_7	I_6	C/I_5	C/I_4	C/I_3	C/I_2	I_1	I_0	CLK	I/O_7	I/O_6	O_5	O_4	O_3	O_2	I/O_1	I/O_0
L	X	X	X	X	X	X	X	X	CLK	Z	Z	H	H	H	H	Z	Z
H	X	X	X	X	X	X	X	X	CLK	Z	Z	Z	Z	Z	Z	Z	Z

NOTES:
1. Z = High Impedance
2. H = High level
3. L = Low level
4. X = Don't care

FIGURE 3. Truth table (unprogrammed) - Continued.

Device Type 01 and 07

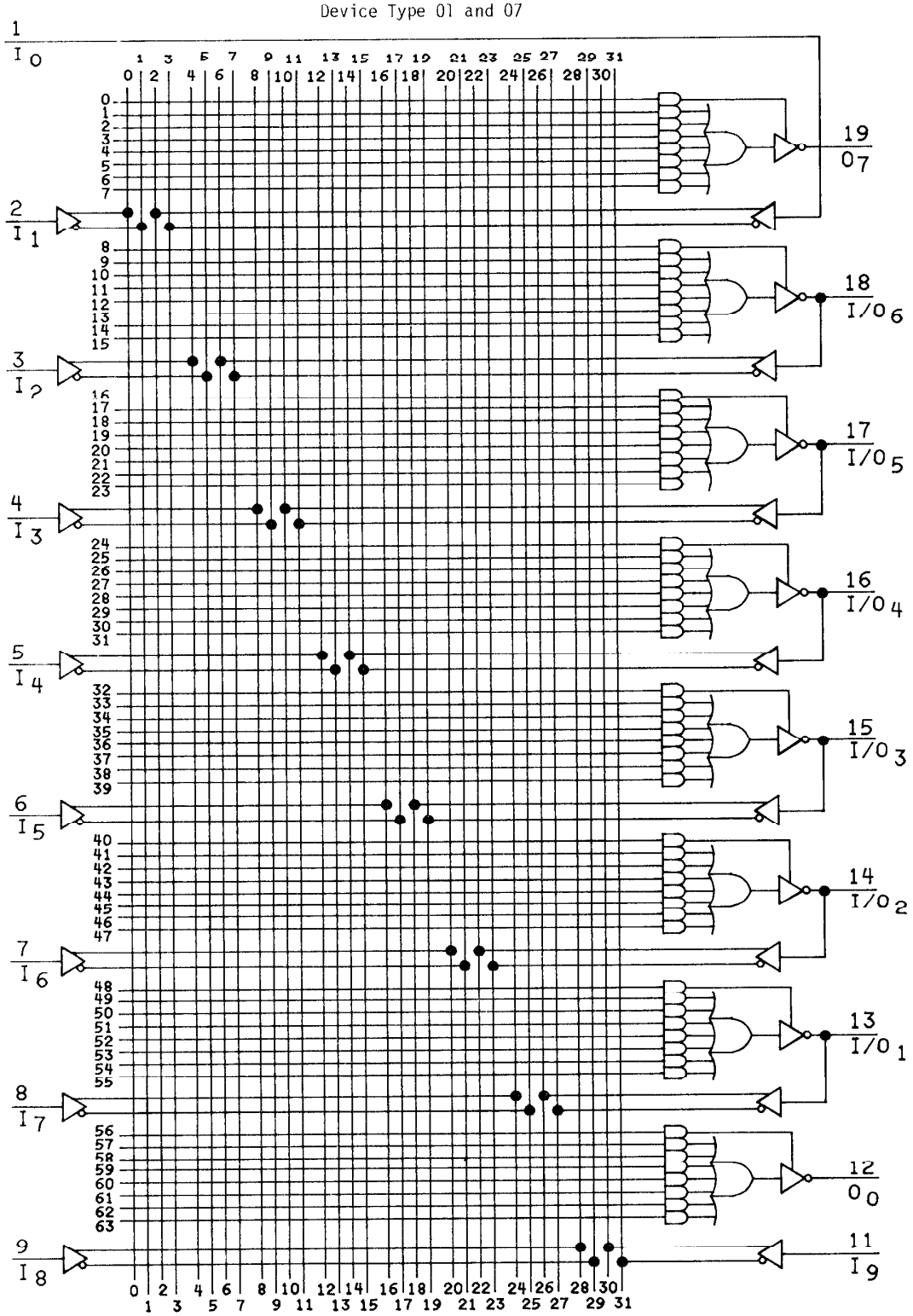

FIGURE 4. Unprogrammed logic diagram.

Device Type 02 and 08

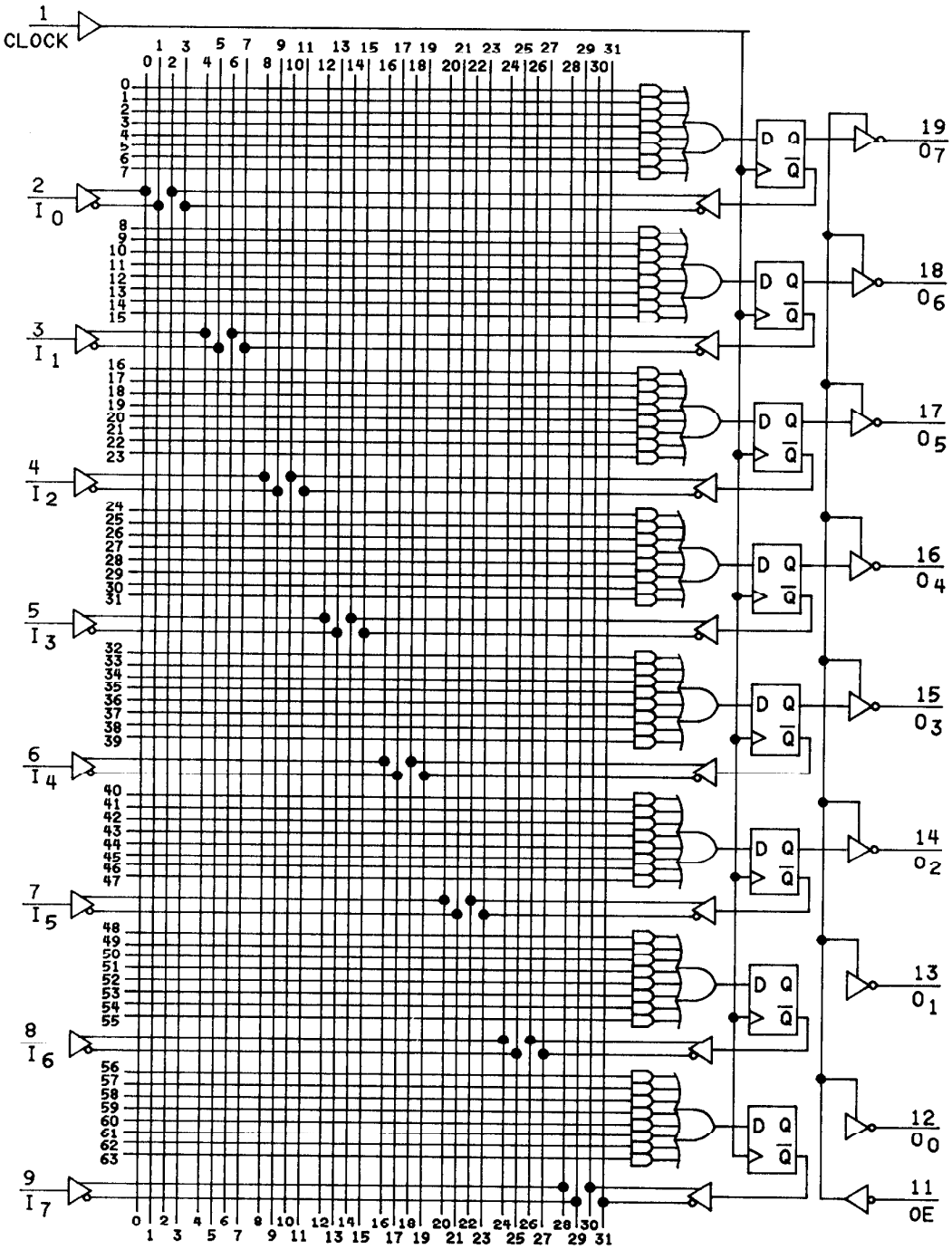

FIGURE 4. Unprogrammed logic diagram - Continued.

Device type 03 and 09

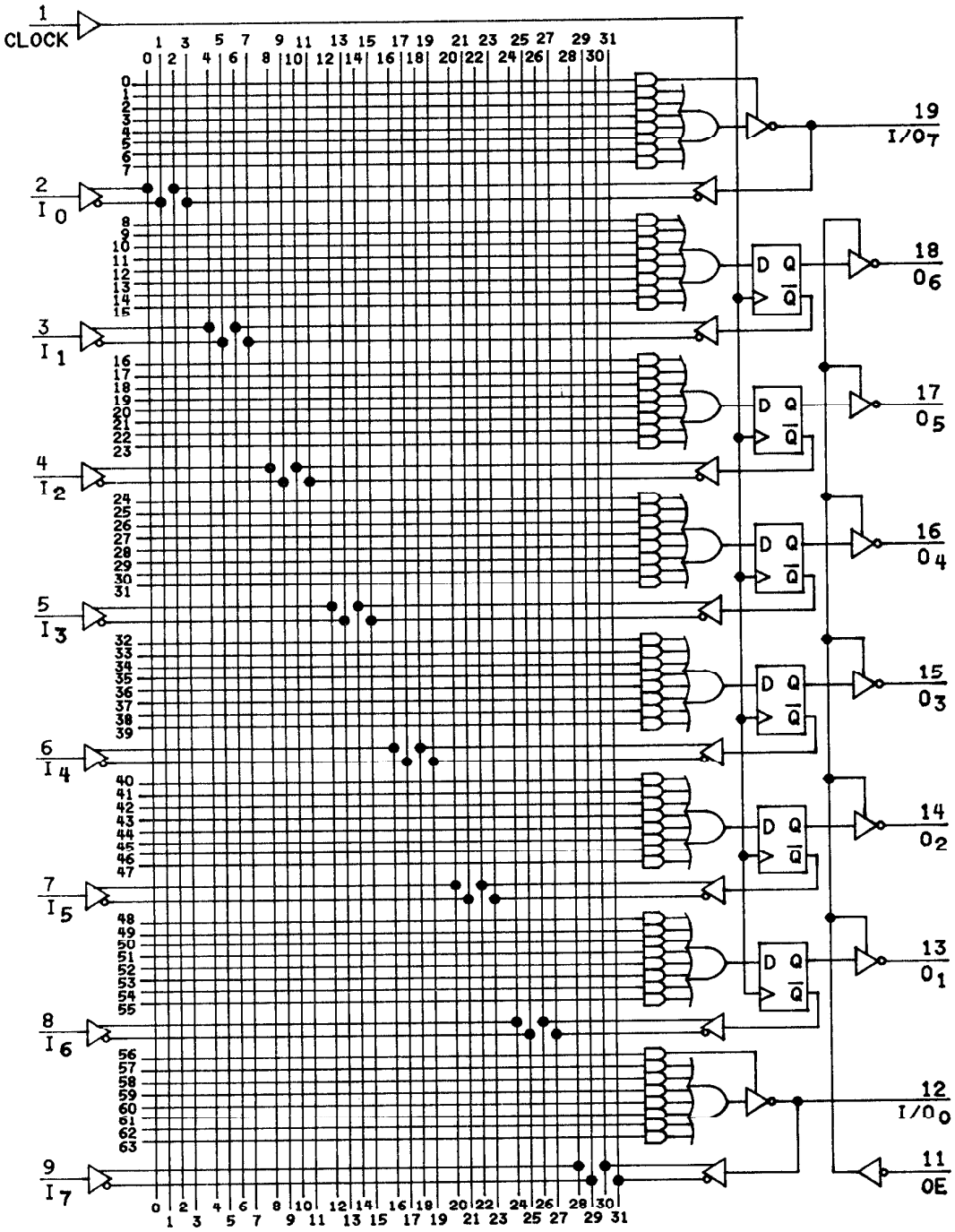

FIGURE 4. Unprogrammed logic diagram - Continued.

Device Type 04 and 10

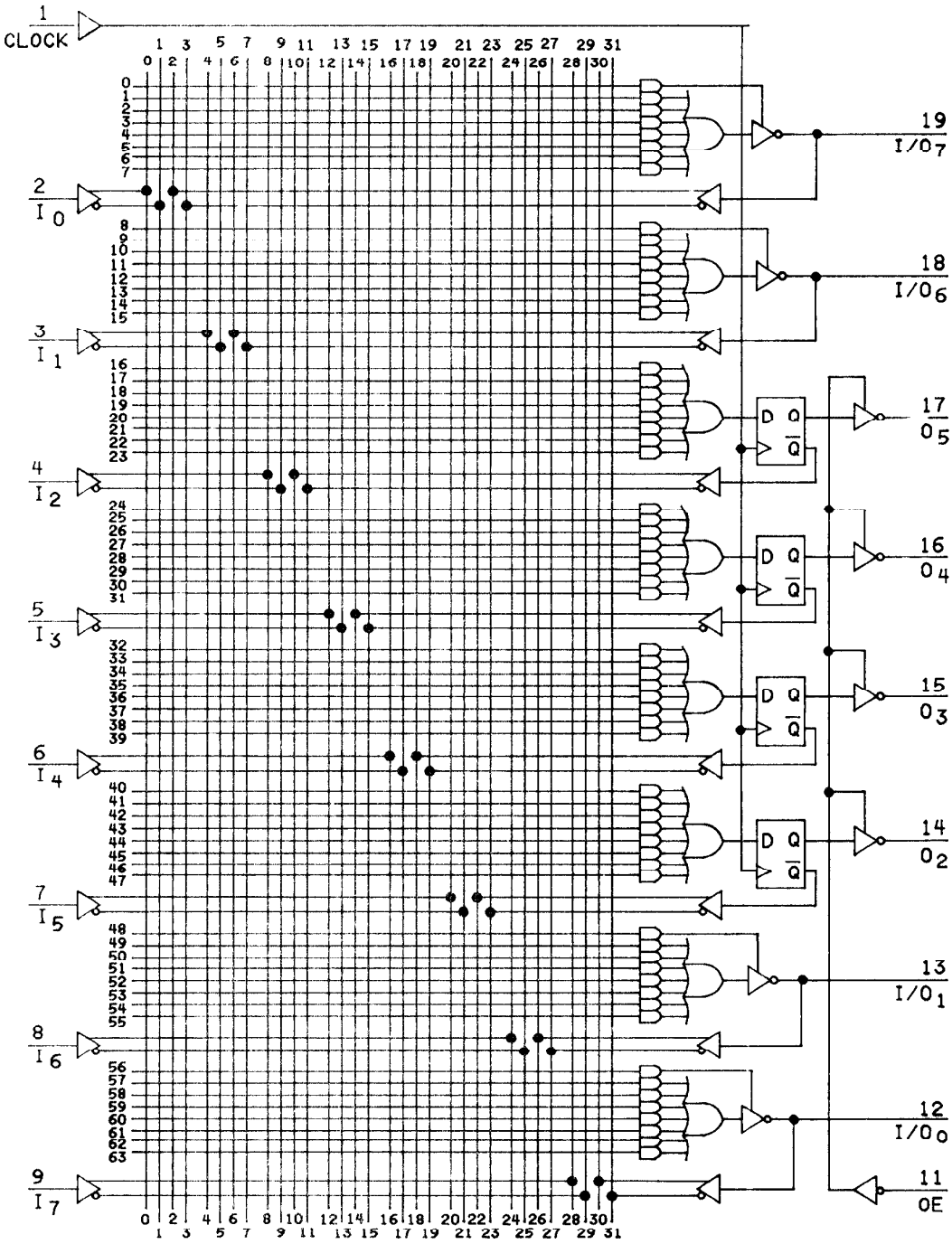

FIGURE 4. Unprogrammed logic diagram - Continued.

Device Type 05

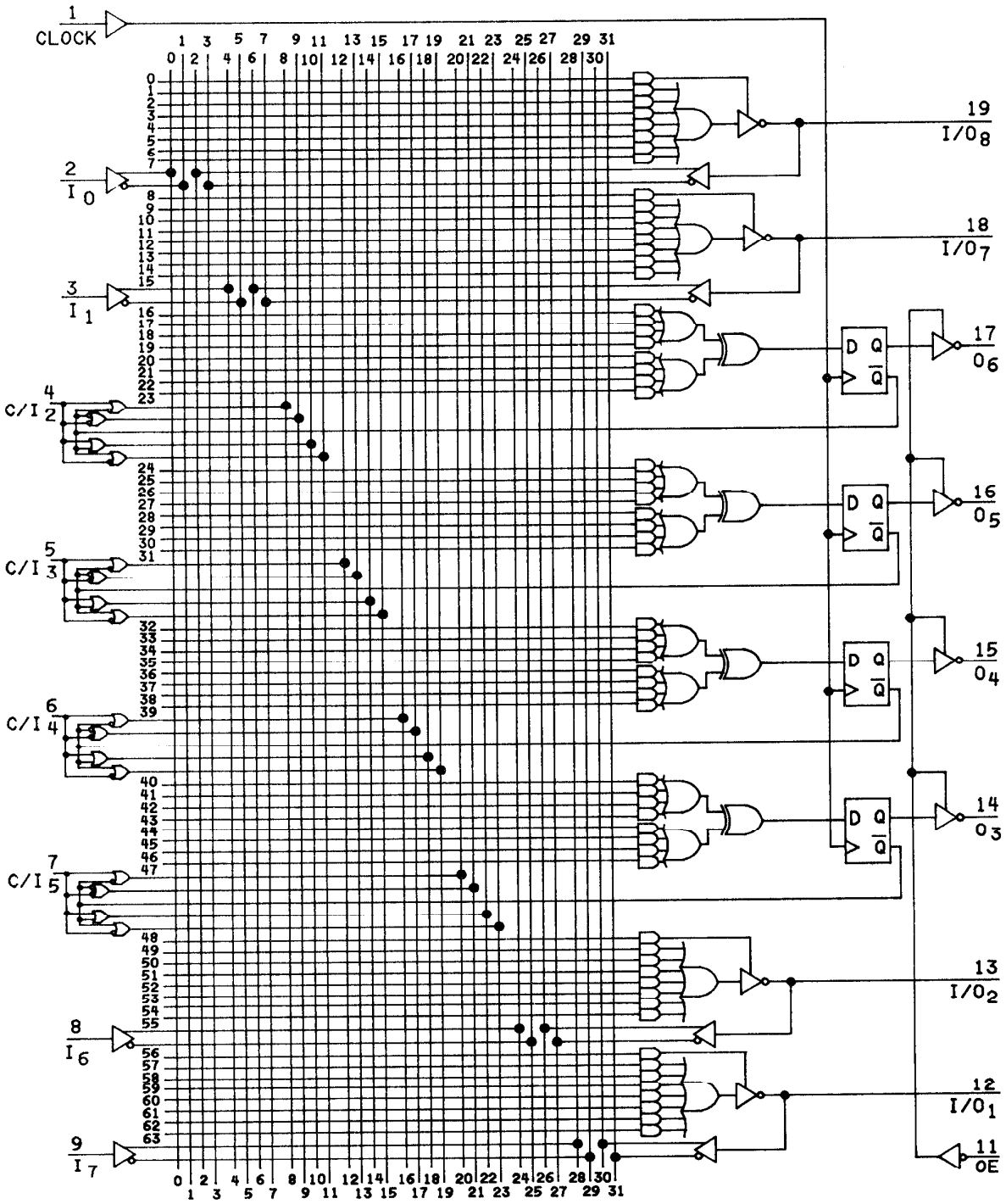

FIGURE 4. Unprogrammed logic diagram - Continued.

Device Type 06

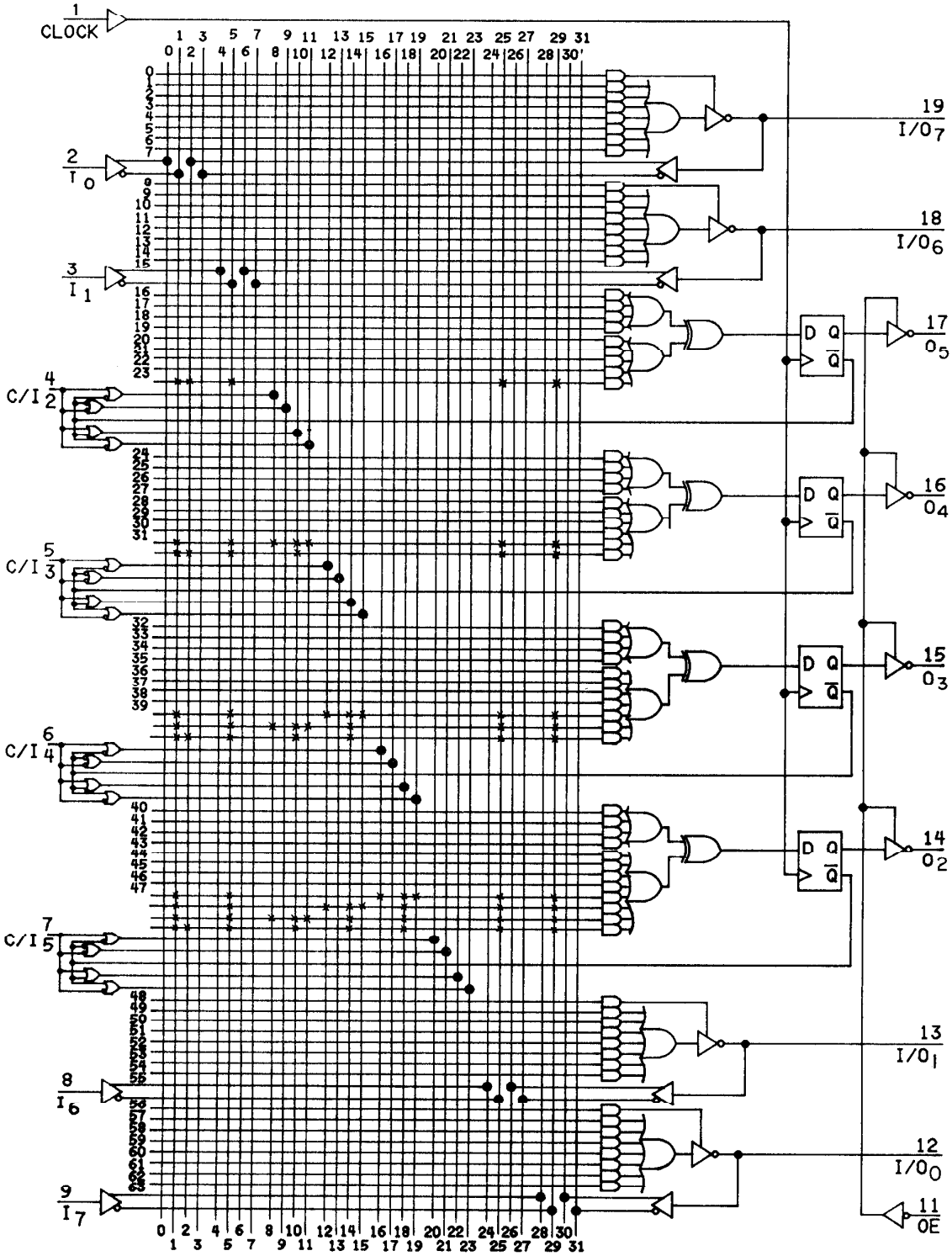

FIGURE 4. Unprogrammed logic diagram - Continued.

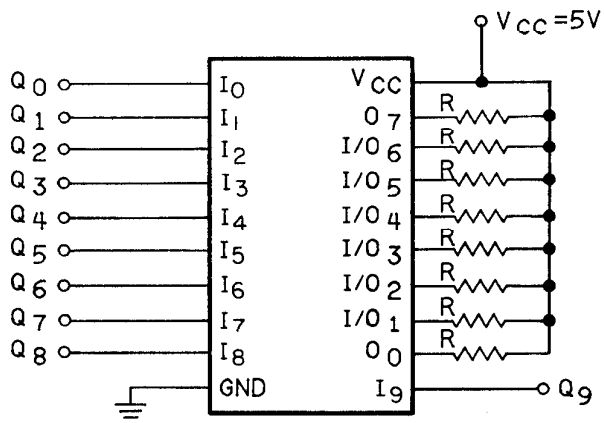

NOTES:
1. R = 560Ω ±5%. All outputs shall have separate identical loads.
2. All pulse generators have the following characteristics:
   V_{IL} = 1.5 V minimum to 0.8 maximum; V_{IH} = 2.0 V minimum to 5.5 V maximum;
   50% ±15% duty cycle and frequencies as specified in note 4.
3. V_{CC} shall be high enough to insure 5.0 V minimum at the device V_{CC} terminal.
4. Input frequencies are as follows:

Input	Frequency (±50%)	Input	Frequency (±50%)
Q_0	f_0 = 100 KHz	Q_5	$f_5 = 1/32\ f_0$
Q_1	$f_1 = 1/2\ f_0$	Q_6	$f_6 = 1/64\ f_0$
Q_2	$f_2 = 1/4\ f_0$	Q_7	$f_7 = 1/128\ f_0$
Q_3	$f_3 = 1/8\ f_0$	Q_8	$f_8 = 1/256\ f_0$
Q_4	$f_4 = 1/16\ f_0$	Q_9	$f_9 = 1/512\ f_0$

FIGURE 5. Burn-in and life test circuit for device type 01 and 07.

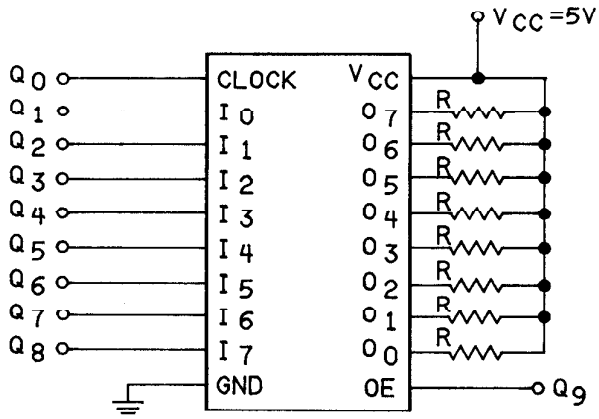

NOTES:
1. R = 560Ω ±5%. All outputs shall have separate identical loads.
2. All pulse generators have the following characteristics:
   V_{IL} = 1.5 V minimum to 0.8 maximum; V_{IH} = 2.0 V minimum to 5.5 V maximum;
   50% ±15% duty cycle and frequencies as specified in note 4.
3. V_{CC} shall be high enough to insure 5.0 V minimum at the device V_{CC} terminal.
4. Input frequencies are as follows:

Input	Frequency (±50%)	Input	Frequency (±50%)
Q_0	f_0 = 100 KHz	Q_5	f_5 = 1/32 f_0
Q_1	f_1 = 1/2 f_0	Q_6	f_6 = 1/64 f_0
Q_2	f_2 = 1/4 f_0	Q_7	f_7 = 1/28 f_0
Q_3	f_3 = 1/8 f_0	Q_8	f_8 = 1/256 f_0
Q_4	f_4 = 1/16 f_0	Q_9	f_9 = 1/512 f_0

FIGURE 5. Burn-in and life test circuit for device type 02 and 08.

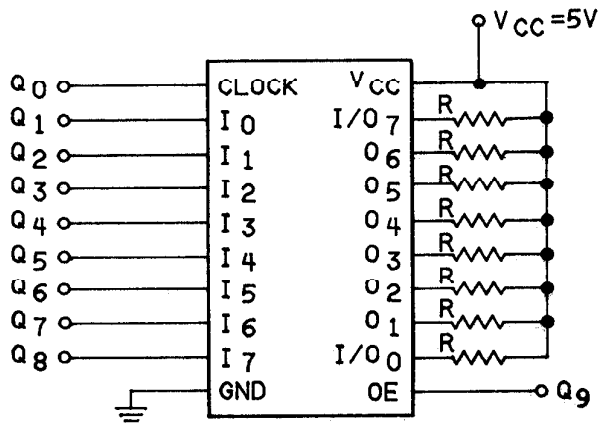

NOTES:
1. R = 560Ω ±5%. •All outputs shall have separate identical loads.
2. All pulse generators have the following characteristics:
   V_{IL} = -1.5 V minimum to 0.8 maximum; V_{IH} = 2.0 V minimum to 5.5 V maximum;
   50% ±15% duty cycle and frequencies as specified in note 4.
3. V_{CC} shall be high enough to insure 5.0 V minimum at the device V_{CC} terminal.
4. Input frequencies are as follows:

Input	Frequency (±50%)	Input	Frequency (±50%)
Q_0	f_0 = 100 KHz	Q_5	f_5 = 1/32 f_0
Q_1	f_1 = 1/2 f_0	Q_6	f_6 = 1/64 f_0
Q_2	f_2 = 1/4 f_0	Q_7	f_7 = 1/128 f_0
Q_3	f_3 = 1/8 f_0	Q_8	f_8 = 1/256 f_0
Q_4	f_4 = 1/16 f_0	Q_9	f_9 = 1/512 f_0

FIGURE 5. Burn-in and life test circuit for device type 03 and 09.

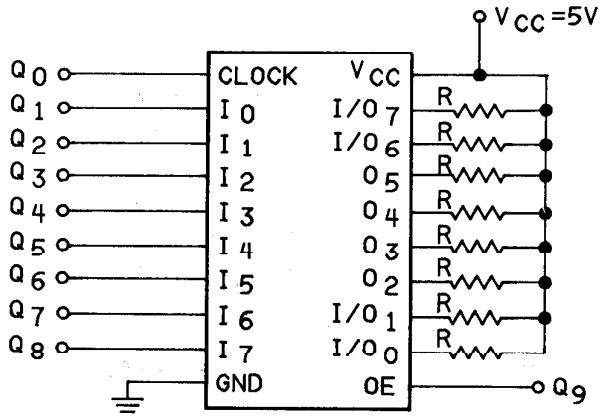

NOTES:
1. R = 560Ω ±5%. All outputs shall have separate identical loads.
2. All pulse generators have the following characteristics:
   V_{IL} = -1.5 V minimum to 0.8 maximum; V_{IH} = 2.0 V minimum to 5.5 V maximum;
   50% ±15% duty cycle and frequencies as psecified in note 4.
3. V_{CC} shall be high enough to insure 5.0 V minimum at the device V_{CC} terminal.
4. Input frequencies are as follows:

Input	Frequency (±50%)	Input	Frequency (±50%)
Q_0	f_0 = 100 KHz	Q_5	f_5 = 1/32 f_0
Q_1	f_1 = 1/2 f_0	Q_6	f_6 = 1/64 f_0
Q_2	f_2 = 1/4 f_0	Q_7	f_7 = 1/128 f_0
Q_3	f_3 = 1/8 f_0	Q_8	f_8 = 1/256 f_0
Q_4	f_4 = 1/16 f_0	Q_9	f_9 = 1/512 f_0

FIGURE 5. Burn-in and life test circuit for device type 04 and 10.

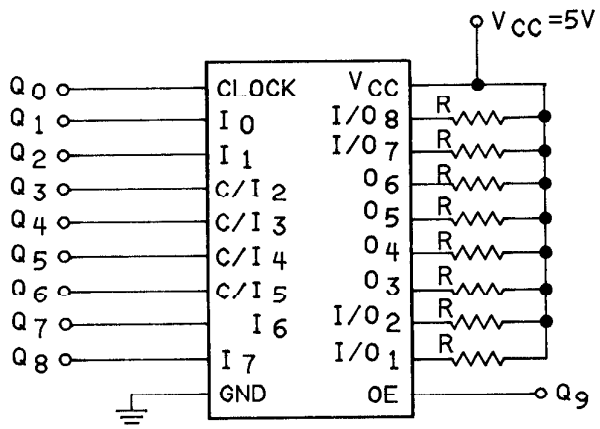

NOTES:
1. R = 560Ω ±5%. All outputs shall have spearate identical loads.
2. All pulse generators have the following characteristics:
   V_{IL} = -1.5 V minimum to 0.8 maximum; V_{IH} = 2.0 V minimum to 5.5 V maximum;
   50% ±15% duty cycle and frequencies as specified in note 4.
3. V_{CC} shall be high enough to insure 5.0 V minimum at the device V_{CC} terminal.
4. Input frequencies are as follows:

Input	Frequency (±50%)	Input	Frequency (±50%)
Q_0	f_0 = 100 KHz	Q_5	$f_5 = 1/32\ f_0$
Q_1	$f_1 = 1/2\ f_0$	Q_6	$f_6 = 1/64\ f_0$
Q_2	$f_2 = 1/4\ f_0$	Q_7	$f_7 = 1/128\ f_0$
Q_3	$f_3 = 1/8\ f_0$	Q_8	$f_8 = 1/256\ f_0$
Q_4	$f_4 = 1/16\ f_0$	Q_9	$f_9 = 1/512\ f_0$

FIGURE 5. Burn-in and life test circuit for device type 05.

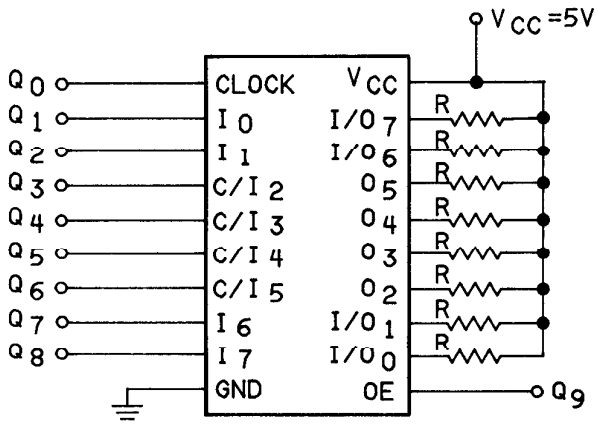

NOTES:
1. R = 560Ω ±5%. All outputs shall have separate identical loads.
2. All pulse generators have the following characteristics:
   V_{IL} = -1.5 V minimum to 0.8 maximum; V_{IH} = 2.0 V minimum to 5.5 V maximum;
   50% ±15% duty cycle and frequencies as specified in note 4.
3. V_{CC} shall be high enough to insure 5.0 V minimum at the device V_{CC} terminal.
4. Input frequencies are as follows:

Input	Frequency (±50%)	Input	Frequency (±50%)
Q_0	f_0 = 100 KHz	Q_5	f_5 = 1/32 f_0
Q_1	f_0 = 1/2 f_0	Q_6	f_6 = 1/64 f_0
Q_2	f_2 = 1/4 f_0	Q_7	f_7 = 1/128 f_0
Q_3	f_3 = 1/8 f_0	Q_8	f_8 = 1/256 f_0
Q_4	f_4 = 1/16 f_0	Q_9	f_9 = 1/512 f_0

FIGURE 5. Burn-in and life test circuit for device type 06.

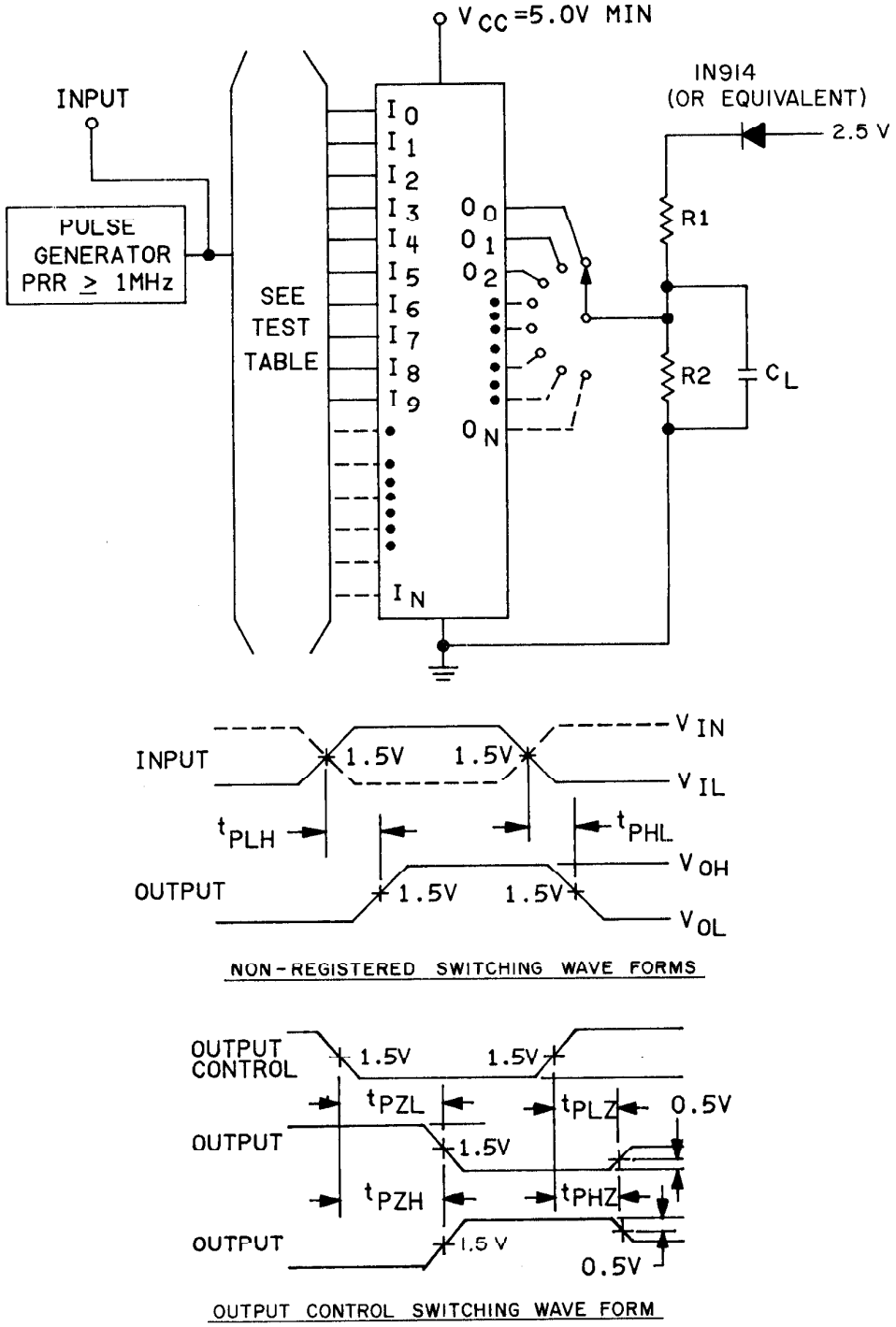

FIGURE 6. Switching time test circuit and waveforms.

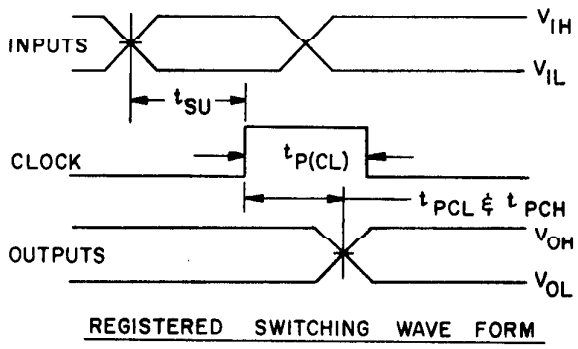

NOTES:

1. Test table for devices programmed in accordance with an altered item drawing may be replaced by the equivalent tests which apply to the specific program configuration for the resulting PAL.
2. C_L = 50pF minimum, including jig and probe capacitance; R_1 = 200Ω ±2%; R_2 = 390Ω ±2%.
3. Outputs may be under load simultaneously.
4. Requirements for t_p (C_L), t_{SU}, and t_H are established by setting the parameters to the limits in table III and observing proper output state change.

FIGURE 6. Switching time test circuit and waveforms - Continued.

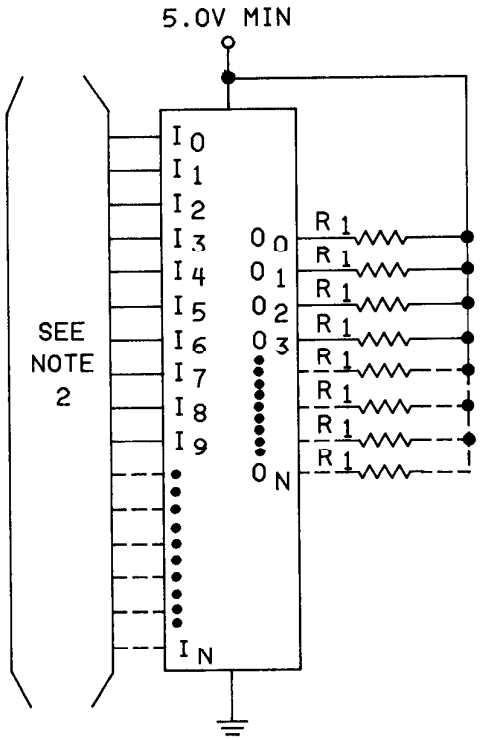

NOTES:
1. R_1 = 4.7Ω ±5%. All outputs shall have separate identical loads.
2. For the freeze-out test, all inputs shall be either high, low, or open.
3. Burn-in circuit may be used to perform this test. (See 4.2d.) All address input shall be either high, low, or open.

FIGURE 7. Freeze-out test bias configuration.

TABLE III. Group A inspection for device type 01.
Terminal conditions (pins not designated may be high ≥2.0 V, low ≤0.8 V, or open).

Symbol	MIL-STD-883 method	Case R,Y,Z	1	2	3	4	5	6	7	8	9	10	11	12	13	14	15	16	17	18	19	20	21	22	23	24	Measured terminal	Test limits: Subgroup 1 T_C = 25°C Min	Subgroup 1 Max	Subgroup 2 T_C = 125°C Min	Subgroup 2 Max	Subgroup 3 T_C = -55°C Min	Subgroup 3 Max	Unit
		Test no.	I_0	I_1	I_2	I_3	I_4	I_5	I_6	I_7	I_8	GND	I_9	O_0	I/O_1	I/O_2	I/O_3	I/O_4	I/O_5	I/O_6	O_7	V_{CC}												
V_{IC}		1	-18 mA									GND										4.5 V					I_0		-1.5		-1.5		-1.5	V
		2		-18 mA								"										"					I_1		"		"		"	"
		3			-18 mA							"										"					I_2		"		"		"	"
		4				-18 mA						"										"					I_3		"		"		"	"
		5					-18 mA					"										"					I_4		"		"		"	"
		6						-18 mA				"										"					I_5		"		"		"	"
		7							-18 mA			"										"					I_6		"		"		"	"
		8								-18 mA		"										"					I_7		"		"		"	"
		9									-18 mA	"										"					I_8		"		"		"	"
		10										"	-18 mA									"					I_9		"		"		"	"
		11										"			-18 mA							"					I/O_1		"		"		"	"
		12										"				-18 mA						"					I/O_2		"		"		"	"
		13										"					-18 mA					"					I/O_3		"		"		"	"
		14										"						-18 mA				"					I/O_4		"		"		"	"
		15										"							-18 mA			"					I/O_5		"		"		"	"
		16										"								-18 mA		"					I/O_6		"		"		"	"
V_{OL}	3007	17	1/	1/	1/	1/	1/	1/	1/	1/	1/	"	1/	12 mA								"					O_0		0.5		0.5		0.5	"
	"	18	"	"	"	"	"	"	"	"	"	"	"		12 nA							"					I/O_1		"		"		"	"
	"	19	"	"	"	"	"	"	"	"	"	"	"			12 mA						"					I/O_2		"		"		"	"
	"	20	"	"	"	"	"	"	"	"	"	"	"				12 mA						"					I/O_3		"		"		"	"
	"	21	"	"	"	"	"	"	"	"	"	"	"					12 mA					"					I/O_4		"		"		"	"
	"	22	"	"	"	"	"	"	"	"	"	"	"						12 mA				"					I/O_5		"		"		"	"
	"	23	"	"	"	"	"	"	"	"	"	"	"							12 mA								I/O_6		"		"		"	"
	"	24	"	"	"	"	"	"	"	"	"	"	"								12 mA	"						O_7		"		"		"	"
V_{OH}	3006	25	"	"	"	"	"	"	"	"	"	"	"	-2 mA								"					O_0	2.4		2.4		2.4		"
	"	26	"	"	"	"	"	"	"	"	"	"	"		-2 nA							"					I/O_1	"		"		"		"
	"	27	"	"	"	"	"	"	"	"	"	"	"			-2 mA							"					I/O_2	"		"		"		"
	"	28	"	"	"	"	"	"	"	"	"	"	"				-2 mA						"					I/O_3	"		"		"		"
	"	29	"	"	"	"	"	"	"	"	"	"	"					-2 mA					"					I/O_4	"		"		"		"
	"	30	"	"	"	"	"	"	"	"	"	"	"						-2 mA				"					I/O_5	"		"		"		"
	"	31	"	"	"	"	"	"	"	"	"	"	"							-2 mA			"					I/O_6	"		"		"		"
	"	32	"	"	"	"	"	"	"	"	"	"	"								-2 mA	"						O_7	"		"		"		"
I_{IL}	3009	33	0.4 V									"										5.5 V					I_0		-0.25		-0.25		-0.25	mA
	"	34		0.4 V								"										"					I_1		"		"		"	"
	"	35			0.4 V							"										"					I_2		"		"		"	"
	"	36				0.4 V						"										"					I_3		"		"		"	"
	"	37					0.4 V					"										"					I_4		"		"		"	"
	"	38						0.4 V				"										"					I_5		"		"		"	"
	"	39							0.4 V			"										"					I_6		"		"		"	"
	"	40								0.4 V		"										"					I_7		"		"		"	"
	"	41									0.4 V	"										"					I_8		"		"		"	"
	"	42										"	0.4 V									"					I_9		"		"		"	"
	"	43										"			0.4 V							"					I/O_1		"		"		"	"
	"	44										"				0.4 V						"					I/O_2		"		"		"	"
	"	45										"					0.4 V					"					I/O_3		"		"		"	"
	"	46										"						0.4 V				"					I/O_4		"		"		"	"
	"	47										"							0.4 V			"					I/O_5		"		"		"	"
	"	48										"								0.4 V		"					I/O_6		"		"		"	"

See footnotes at end of table.

TABLE III. Group A inspection for device type 01 - Continued.
Terminal conditions (pins not designated may be high ≥2.0 V, low ≤0.8 V, or open).

Symbol	MIL-STD-883 method	Case R,Y,2	1	2	3	4	5	6	7	8	9	10	11	12	13	14	15	16	17	18	19	20	21	22	23	24	Measured terminal	Test limits: Subgroup 1 T_C = 25°C Min	Subgroup 1 Max	Subgroup 2 T_C = 125°C Min	Subgroup 2 Max	Subgroup 3 T_C = -55°C Min	Subgroup 3 Max	Unit
		Test no.	I_0	I_1	I_2	I_3	I_4	I_5	I_6	I_7	I_8	GND	I_9	O_0	I/O_1	I/O_2	I/O_3	I/O_4	I/O_5	I/O_6	O_7	V_{CC}												
I_{IH}	3010	49	2.4 V									GND										5.5 V					I_0		25		25		25	μA
	"	50		2.4 V								"										"					I_1		"		"		"	"
	"	51			2.4 V							"										"					I_2		"		"		"	"
	"	52				2.4 V						"										"					I_3		"		"		"	"
	"	53					2.4 V					"										"					I_4		"		"		"	"
	"	54						2.4 V				"										"					I_5		"		"		"	"
	"	55							2.4 V			"										"					I_6		"		"		"	"
	"	56								2.4 V		"										"					I_7		"		"		"	"
	"	57									2.4 V	"										"					I_8		"		"		"	"
	"	58										"	2.4 V									"					I_9		"		"		"	"
I_I		59	5.5 V									"										"					I_0		1.0		1.0		1.0	mA
		60		5.5 V								"										"					I_1		"		"		"	"
		61			5.5 V							"										"					I_2		"		"		"	"
		62				5.5 V						"										"					I_3		"		"		"	"
		63					5.5 V					"										"					I_4		"		"		"	"
		64						5.5 V				"										"					I_5		"		"		"	"
		65							5.5 V			"										"					I_6		"		"		"	"
		66								5.5 V		"										"					I_7		"		"		"	"
		67									5.5 V	"										"					I_8		"		"		"	"
		68										"	5.5 V									"					I_9		"		"		"	"
		69										"			5.5 V							"					I/O_1		"		"		"	"
		70										"				5.5 V						"					I/O_2		"		"		"	"
		71										"					5.5 V					"					I/O_3		"		"		"	"
		72										"						5.5 V				"					I/O_4		"		"		"	"
		73										"							5.5 V			"					I/O_5		"		"		"	"
		74										"								5.5 V		"					I/O_6		"		"		"	"
I_{OS}	3011	75	1/	1/	1/	1/	1/	1/	1/	1/	1/	"	1/	GND	GND	GND	GND	GND	GND	GND	GND	5.0 V					O_0	-30	-250	-30	-250	-30	-250	"
	"	76		"	"	"	"	"	"	"	"	"	"									"					I/O_1	"	"	"	"	"	"	"
	"	77			"	"	"	"	"	"	"	"	"									"					I/O_2	"	"	"	"	"	"	"
	"	78				"	"	"	"	"	"	"	"									"					I/O_3	"	"	"	"	"	"	"
	"	79					"	"	"	"	"	"	"									"					I/O_4	"	"	"	"	"	"	"
	"	80						"	"	"	"	"	"									"					I/O_5	"	"	"	"	"	"	"
	"	81							"	"	"	"	"									"					I/O_6	"	"	"	"	"	"	"
	"	82								"	"	"	"									"					O_7	"	"	"	"	"	"	"
I_{OZH}		83	"	"	"	"	"	"	"	"	"	"	"	2.4 V	2.4 V	2.4 V	2.4 V	2.4 V	2.4 V	2.4 V	2.4 V	5.5 V					O_0		100		100		100	μA
		84	"	"	"	"	"	"	"	"	"	"	"									"					I/O_1		"		"		"	"
		85	"	"	"	"	"	"	"	"	"	"	"									"					I/O_2		"		"		"	"
		86	"	"	"	"	"	"	"	"	"	"	"									"					I/O_3		"		"		"	"
		87	"	"	"	"	"	"	"	"	"	"	"									"					I/O_4		"		"		"	"
		88	"	"	"	"	"	"	"	"	"	"	"									"					I/O_5		"		"		"	"
		89	"	"	"	"	"	"	"	"	"	"	"									"					I/O_6		"		"		"	"
		90	"	"	"	"	"	"	"	"	"	"	"									2.4 V					O_7		"		"		"	"
I_{OZL}		91	"	"	"	"	"	"	"	"	"	"	"	0.4 V								"					O_0		-100		-100		-100	"
		92	"	"	"	"	"	"	"	"	"	"	"									0.4 V					O_7		-100		-100		-100	"
I_{CC}	3005	93										"										"					V_{CC}		180		180		180	mA

See footnotes at end of table.

TABLE III. Group A inspection for device type 01 - Continued.
Terminal conditions (pins not designated may be high ≥2.0 V, low ≤0.8 V, or open).

Symbol	MIL-STD-883 method	Case R,Y,Z	1	2	3	4	5	6	7	8	9	10	11	12	13	14	15	16	17	18	19	20	21	22	23	24	Measured terminal	Test limits						Unit
																												Subgroup 7 T_C = 25°C		Subgroup 8 T_C = 125°C		Subgroup 8 T_C = -55°C		
		Test no.	I_0	I_1	I_2	I_3	I_4	I_5	I_6	I_7	I_8	GND	I_9	O_0	I/O_1	I/O_2	I/O_3	I/O_4	I/O_5	I/O_6	O_7	V_{CC}						Min	Max	Min	Max	Min	Max	
Functional tests	3014	94	2/	2/	2/	2/	2/	2/	2/	2/	2/	GND	2/	2/	2/	2/	2/	2/	2/	2/	2/	4.5 V					All outputs		2/		2/		2/	
																												Subgroup 9 T_C = 25°C		Subgroup 10 T_C = 125°C		Subgroup 11 T_C = -55°C		
																												Min	Max	Min	Max	Min	Max	
t_{PHL}	3003	95	3/	3/	3/	3/	3/	3/	3/	3/	3/	"	3/	4/ 9/	4/ 3/	4/ 3/	4/ 9/	4/ 9/	4/ 9/	4/ 9/	3/	3/					All outputs and I/OS		30		30		30	ns
t_{PLH}	"	96	"	"	"	"	"	"	"	"	"	"	"	"	"	"	"	"	"	"	"	"					"		"		"		"	"
t_{P2H}	"	97	"	"	"	"	"	"	"	"	"	"	"	"	"	"	"	"	"	"	"	"					"		"		"		"	"
t_{P2L}	"	98	"	"	"	"	"	"	"	"	"	"	"	"	"	"	"	"	"	"	"	"					"		"		"		"	"
t_{PHZ}	"	99	"	"	"	"	"	"	"	"	"	"	"	"	"	"	"	"	"	"	"	"					"		"		"		"	"
t_{PLZ}	"	100	"	"	"	"	"	"	"	"	"	"	"	"	"	"	"	"	"	"	"	"					"		"		"		"	"

See footnotes at end of table.

TABLE III. Group A inspection for device type 02.
Terminal conditions (pins not designated may be high ≥2.0 V, low ≤0.8 V, or open).

Symbol	MIL-STD-883 method	Case R,Y,Z	1	2	3	4	5	6	7	8	9	10	11	12	13	14	15	16	17	18	19	20	21	22	23	24	Measured terminal	Test limits Subgroup 1 T_C = 25°C Min	Subgroup 1 Max	Subgroup 2 T_C = 125°C Min	Subgroup 2 Max	Subgroup 3 T_C = -55°C Min	Subgroup 3 Max	Unit
		Test no.	CLK	I_0	I_1	I_2	I_3	I_4	I_5	I_6	I_7	GND	OE	O_0	O_1	O_2	O_3	O_4	O_5	O_6	O_7	V_{CC}												
V_{IC}		1	-18 mA									GND										4.5 V					CLOCK		-1.5		-1.5		-1.5	V
		2		-18 mA								"										"					I0		"		"		"	"
		3			-18 mA							"										"					I1		"		"		"	"
		4				-18 mA						"										"					I2		"		"		"	"
		5					-18 mA					"										"					I3		"		"		"	"
		6						-18 mA				"										"					I4		"		"		"	"
		7							-18 mA			"										"					I5		"		"		"	"
		8								-18 mA		"										"					I6		"		"		"	"
		9									-18 mA	"										"					I7		"		"		"	"
		10										"	-18 mA									"					OE		"		"		"	"
V_{OL}	3007	11	1/	1/	1/	1/	1/	1/	1/	1/	1/	"	5/	12 mA								"					O_0		0.5		0.5		0.5	"
	"	12	"	"	"	"	"	"	"	"	"	"	"									"					O_1		"		"		"	"
	"	13	"	"	"	"	"	"	"	"	"	"	"									"					O_2		"		"		"	"
	"	14	"	"	"	"	"	"	"	"	"	"	"									"					O_3		"		"		"	"
	"	15	"	"	"	"	"	"	"	"	"	"	"				12 mA					"					O_4		"		"		"	"
	"	16	"	"	"	"	"	"	"	"	"	"	"					12 mA				"					O_5		"		"		"	"
	"	17	"	"	"	"	"	"	"	"	"	"	"						12 mA			"					O_6		"		"		"	"
	"	18	"	"	"	"	"	"	"	"	"	"	"							12 mA		"					O_7		"		"		"	"
																					12 mA													
V_{OH}	3006	19	"	"	"	"	"	"	"	"	"	"	"	-2 mA								"					O_0	2.4		2.4		2.4		"
	"	20	"	"	"	"	"	"	"	"	"	"	"		-2 mA							"					O_1	"		"		"		"
	"	21	"	"	"	"	"	"	"	"	"	"	"			-2 mA							"					O_2	"		"		"		"
	"	22	"	"	"	"	"	"	"	"	"	"	"										"					O_3	"		"		"		"
	"	23	"	"	"	"	"	"	"	"	"	"	"				-2 mA						"					O_4	"		"		"		"
	"	24	"	"	"	"	"	"	"	"	"	"	"					-2 mA					"					O_5	"		"		"		"
	"	25	"	"	"	"	"	"	"	"	"	"	"						-2 mA				"					O_6	"		"		"		"
	"	26	"	"	"	"	"	"	"	"	"	"	"							-2 mA			"					O_7	"		"		"		"
																				-2 mA														
I_{IL}	3009	27	0.4 V									"										5.5 V					CLOCK		-0.25		-0.25		-0.25	mA
	"	28		0.4 V								"										"					I0		"		"		"	"
	"	29			0.4 V							"										"					I1		"		"		"	"
	"	30				0.4 V						"										"					I2		"		"		"	"
	"	31					0.4 V					"										"					I3		"		"		"	"
	"	32						0.4 V				"										"					I4		"		"		"	"
	"	33							0.4 V			"										"					I5		"		"		"	"
	"	34								0.4 V		"										"					I6		"		"		"	"
	"	35									0.4 V	"										"					I7		"		"		"	"
	"	36										"	0.4 V									"					OE		"		"		"	"
I_{IH}	3010	37	2.4 V									"										"					CLOCK		25		25		25	μA
	"	38		2.4 V								"										"					I0		"		"		"	"
	"	39			2.4 V							"										"					I1		"		"		"	"
	"	40				2.4 V						"										"					I2		"		"		"	"
	"	41					2.4 V					"										"					I3		"		"		"	"
	"	42						2.4 V				"										"					I4		"		"		"	"
	"	43							2.4 V			"										"					I5		"		"		"	"
	"	44								2.4 V		"										"					I6		"		"		"	"
	"	45									2.4 V	"										"					I7		"		"		"	"
	"	46										"	2.4 V									"					CE		"		"		"	"

See footnotes at end of table.

TABLE III. Group A inspection for device type 02 - Continued.
Terminal conditions (pins not designated may be high ≥2.0 V, low ≤0.8 V, or open).

Symbol	MIL-STD-883 method	Case R,Y,2	1	2	3	4	5	6	7	8	9	10	11	12	13	14	15	16	17	18	19	20	21	22	23	24	Measured terminal	Tes: limits Subgroup 1 T_C = 25°C Min	Subgroup 1 Max	Subgroup 2 T_C = 125°C Min	Subgroup 2 Max	Subgroup 3 T_C = -55°C Min	Subgroup 3 Max	Unit
		Test no.	CLK	I_0	I_1	I_2	I_3	I_4	I_5	I_6	I_7	GND	OE	O_0	O_1	O_2	O_3	O_4	O_5	O_6	O_7	V_{CC}												
I_I		47	5.5 V									GND										5.5 V					CLOCK		1.0		1.0		1.0	mA
		48		5.5 V								"										"					I_0		"		"		"	"
		49			5.5 V							"										"					I_1		"		"		"	"
		50				5.5 V						"										"					I_2		"		"		"	"
		51					5.5 V					"										"					I_3		"		"		"	"
		52						5.5 V				"										"					I_4		"		"		"	"
		53							5.5 V			"										"					I_5		"		"		"	"
		54								5.5 V		"										"					I_6		"		"		"	"
		55									5.5 V	"										"					I_7		"		"		"	"
		56										"	5.5 V									"					OE		"		"		"	"
I_{OS}	3011	57	1/	1/	1/	1/	1/	1/	1/	1/	1/	"	6/	GND								5.0 V					O_0	-30	-250	-30	-250	-30	-250	"
	"	58	"	"	"	"	"	"	"	"	"	"	"		GND	GND						"					O_1	"	"	"	"	"	"	"
	"	59	"	"	"	"	"	"	"	"	"	"	"									"					O_2	"	"	"	"	"	"	"
	"	60	"	"	"	"	"	"	"	"	"	"	"									"					O_3	"	"	"	"	"	"	"
	"	61	"	"	"	"	"	"	"	"	"	"	"									"					O_4	"	"	"	"	"	"	"
	"	62	"	"	"	"	"	"	"	"	"	"	"									"					O_5	"	"	"	"	"	"	"
	"	63	"	"	"	"	"	"	"	"	"	"	"									"					O_6	"	"	"	"	"	"	"
	"	64	"	"	"	"	"	"	"	"	"	"	"									"					O_7	"	"	"	"	"	"	"
I_{OZH}		65	"	"	"	"	"	"	"	"	"	"	7/	2.4 V								5.5 V					O_0		100		100		100	μA
		66	"	"	"	"	"	"	"	"	"	"	"		2.4 V								"					O_1		"		"		"	"
		67	"	"	"	"	"	"	"	"	"	"	"			2.4 V							"					O_2		"		"		"	"
		68	"	"	"	"	"	"	"	"	"	"	"				2.4 V						"					O_3		"		"		"	"
		69	"	"	"	"	"	"	"	"	"	"	"					2.4 V					"					O_4		"		"		"	"
		70	"	"	"	"	"	"	"	"	"	"	"						2.4 V				"					O_5		"		"		"	"
		71	"	"	"	"	"	"	"	"	"	"	"							2.4 V			"					O_6		"		"		"	"
		72	"	"	"	"	"	"	"	"	"	"	"								2.4 V		"					O_7		"		"		"	"
I_{OZL}		73	"	"	"	"	"	"	"	"	"	"	"	0.4 V								"					O_0		-100		-100		-100	"
		74	"	"	"	"	"	"	"	"	"	"	"		0.4 V								"					O_1		"		"		"	"
		75	"	"	"	"	"	"	"	"	"	"	"			0.4 V							"					O_2		"		"		"	"
		76	"	"	"	"	"	"	"	"	"	"	"				0.4 V						"					O_3		"		"		"	"
		77	"	"	"	"	"	"	"	"	"	"	"					0.4 V					"					O_4		"		"		"	"
		78	"	"	"	"	"	"	"	"	"	"	"						0.4 V				"					O_5		"		"		"	"
		79	"	"	"	"	"	"	"	"	"	"	"							0.4 V			"					O_6		"		"		"	"
		80	"	"	"	"	"	"	"	"	"	"	"								0.4 V		"					O_7		"		"		"	"
I_{CC}	3005	81										"										"					V_{CC}		180		180		180	mA
																												Subgroup 7 T_C = 25°C Min	Subgroup 7 Max	Subgroup 8 T_C = 125°C Min	Subgroup 8 Max	Subgroup 8 T_C = -55°C Min	Subgroup 8 Max	
Functional tests	3014	82	2/	2/	2/	2/	2/	2/	2/	2/	2/	GND	2/	2/	2/	2/	2/	2/	2/	2/	2/	4.5 V					All outputs		2/		2/		2/	

See footnotes at end of table.

TABLE III. Group A inspection for device type 02 - Continued.
Terminal conditions (pins not designated may be high ≥2.0 V, low ≤0.8 V, or open).

Symbol	MIL-STD-883 method	Case R,Y,Z	1	2	3	4	5	6	7	8	9	10	11	12	13	14	15	16	17	18	19	20	21	22	23	24	Measured terminal	Test limits						Unit
																												Subgroup 9 $T_C = 25°C$		Subgroup 10 $T_C = 125°C$		Subgroup 11 $T_C = -55°C$		
		Test no.	CLK	I_0	I_1	I_2	I_3	I_4	I_5	I_6	I_7	GND	OE	O_0	O_1	O_2	O_3	O_4	O_5	O_6	O_7	V_{CC}						Min	Max	Min	Max	Min	Max	
t_{SU}	3003 Fig. 6	83	3/	3/	3/	3/	3/	3/	3/	3/	3/	GND	6/	4/ 8/	4/ 8/	4/ 8/	4/ 8/	4/ 8/	4/ 8/	4/ 8/	4/ 8/	3/					All outputs	10/	30	10/	30	10/	30	ns
$t_{P(CL)}$	"	84	"	"	"	"	"	"	"	"	"	"	"	"	"	"	"	"	"	"	"	"					"	10/	20	10/	20	10/	20	"
t_{PCH}	"	85	"	"	"	"	"	"	"	"	"	"	"	"	"	"	"	"	"	"	"	"					"		"		"		"	"
t_{PCL}	"	86	"	"	"	"	"	"	"	"	"	"	"	"	"	"	"	"	"	"	"	"					"		"		"		"	"
t_{PZH}	"	87	"	"	"	"	"	"	"	"	"	"	"	"	"	"	"	"	"	"	"	"					"		25		25		25	"
t_{PZL}	"	88	"	"	"	"	"	"	"	"	"	"	"	"	"	"	"	"	"	"	"	"					"		"		"		"	"
t_{PLZ}	"	89	"	"	"	"	"	"	"	"	"	"	"	"	"	"	"	"	"	"	"	"					"		"		"		"	"
t_{PHZ}	"	90	"	"	"	"	"	"	"	"	"	"	"	"	"	"	"	"	"	"	"	"					"		"		"		"	"
f_{MAX}	"	91	5/	5/	5/	5/	5/	5/	5/	5/	5/	"	5/	5/	5/	5/	5/	5/	5/	5/	5/	4.5 V					"	20		20		20		MHz

See footnotes at end of table.

TABLE III. Group A inspection for device type 03.
Terminal conditions (pins not designated may be high ≥2.0 V, low ≤0.8 V, or open).

Symbol	MIL-STD-883 method	Case R,Y,Z	1	2	3	4	5	6	7	8	9	10	11	12	13	14	15	16	17	18	19	20	21	22	23	24	Measured terminal	Test limits Subgroup 1 T_C = 25°C Min	Subgroup 1 Max	Subgroup 2 T_C = 125°C Min	Subgroup 2 Max	Subgroup 3 T_C = -55°C Min	Subgroup 3 Max	Unit
		Test no.	CLK	I_0	I_1	I_2	I_3	I_4	I_5	I_6	I_7	GND	CE	I/O_0	O_1	O_2	O_3	O_4	O_5	O_6	I/O_7	V_{CC}												
V_{IC}		1	-18 mA									GND										4.5 V					CLOCK		-1.5		-1.5		-1.5	V
		2		-18 mA								"										"					I_0		"		"		"	"
		3			-18 mA							"										"					I_1		"		"		"	"
		4				-18 mA						"										"					I_2		"		"		"	"
		5					-18 mA					"										"					I_3		"		"		"	"
		6						-18 mA				"										"					I_4		"		"		"	"
		7							-18 mA			"										"					I_5		"		"		"	"
		8								-18 mA		"										"					I_6		"		"		"	"
		9									-18 mA	"										"					I_7		"		"		"	"
		10										"	-18 mA									"					OE		"		"		"	"
		11										"		-18 mA								"					I/O_0		"		"		"	"
		12										"									-18 mA	"					I/O_7		"		"		"	"
V_{OL}	3007	13	1/	1/	1/	1/	1/	1/	1/	1/	1/	"	6/	12 mA								"					I/O_0		0.5		0.5		0.5	"
	"	14	"	"	"	"	"	"	"	"	"	"	"		12 mA	12 mA						"					O_1		"		"		"	"
	"	15	"	"	"	"	"	"	"	"	"	"	"				12 mA					"					O_2		"		"		"	"
	"	16	"	"	"	"	"	"	"	"	"	"	"					12 mA				"					O_3		"		"		"	"
	"	17	"	"	"	"	"	"	"	"	"	"	"						12 mA			"					O_4		"		"		"	"
	"	18	"	"	"	"	"	"	"	"	"	"	"							12 mA		"					O_5		"		"		"	"
	"	19	"	"	"	"	"	"	"	"	"	"	"								12 mA	"					O_6		"		"		"	"
	"	20	"	"	"	"	"	"	"	"	"	"	"									"					I/O_7		"		"		"	"
V_{OH}	3006	21	"	"	"	"	"	"	"	"	"	"	"	-2 mA								"					I/O_0	2.4		2.4		2.4		"
	"	22	"	"	"	"	"	"	"	"	"	"	"		-2 mA	-2 mA						"					O_1	"		"		"		"
	"	23	"	"	"	"	"	"	"	"	"	"	"				-2 mA					"					O_2	"		"		"		"
	"	24	"	"	"	"	"	"	"	"	"	"	"					-2 mA				"					O_3	"		"		"		"
	"	25	"	"	"	"	"	"	"	"	"	"	"						-2 mA			"					O_4	"		"		"		"
	"	26	"	"	"	"	"	"	"	"	"	"	"							-2 mA		"					O_5	"		"		"		"
	"	27	"	"	"	"	"	"	"	"	"	"	"								-2 mA	"					O_6	"		"		"		"
	"	28	"	"	"	"	"	"	"	"	"	"	"									"					I/O_7	"		"		"		"
I_{IL}	3009	29	0.4 V									"										5.5 V					CLOCK		-0.25		-0.25		-0.25	mA
	"	30		0.4 V								"										"					I_0		"		"		"	"
	"	31			0.4 V							"										"					I_1		"		"		"	"
	"	32				0.4 V						"										"					I_2		"		"		"	"
	"	33					0.4 V					"										"					I_3		"		"		"	"
	"	34						0.4 V				"										"					I_4		"		"		"	"
	"	35							0.4 V			"										"					I_5		"		"		"	"
	"	36								0.4 V		"										"					I_6		"		"		"	"
	"	37									0.4 V	"										"					I_7		"		"		"	"
	"	38										"	0.4 V									"					OE		"		"		"	"
	"	39										"		0.4 V								"					I/O_0		"		"		"	"
	"	40										"									0.4 V	"					I/O_1		"		"		"	"
I_{IH}	3010	41	2.4 V									"										"					CLOCK		25		25		25	μA
	"	42		2.4 V								"										"					I_0		"		"		"	"
	"	43			2.4 V							"										"					I_1		"		"		"	"
	"	44				2.4 V						"										"					I_2		"		"		"	"
	"	45					2.4 V					"										"					I_3		"		"		"	"
	"	46						2.4 V				"										"					I_4		"		"		"	"
	"	47							2.4 V			"										"					I_5		"		"		"	"
	"	48								2.4 V		"										"					I_6		"		"		"	"
	"	49									2.4 V	"										"					I_7		"		"		"	"
	"	50										"	2.4 V									"					CE		"		"		"	"

See footnotes at end of table.

TABLE III. Group A inspection for device type 03 - Continued.
Terminal conditions (pins not designated may be high ≥2.0 V, low ≤0.8 V, or open).

Symbol	MIL-STD-883 method	Case R,Y,2	1	2	3	4	5	6	7	8	9	10	11	12	13	14	15	16	17	18	19	20	21	22	23	24	Measured terminal	Test limits Subgroup 1 T_C = 25°C Min	Subgroup 1 Max	Subgroup 2 T_C = 125°C Min	Subgroup 2 Max	Subgroup 3 T_C = -55°C Min	Subgroup 3 Max	Unit
		Test no.	CLK	I_0	I_1	I_2	I_3	I_4	I_5	I_6	I_7	GND	OE	I/O_0	O_1	O_2	O_3	O_4	O_5	O_6	I/O_7	V_{CC}												
I_I		51	5.5 V									GND										5.5 V					CLOCK		1.0		1.0		1.0	mA
		52		5.5 V								"										"					I_0		"		"		"	"
		53			5.5 V							"										"					I_1		"		"		"	"
		54				5.5 V						"										"					I_2		"		"		"	"
		55					5.5 V					"										"					I_3		"		"		"	"
		56						5.5 V				"										"					I_4		"		"		"	"
		57							5.5 V			"										"					I_5		"		"		"	"
		58								5.5 V		"										"					I_6		"		"		"	"
		59									5.5 V	"										"					I_7		"		"		"	"
		60										"	5.5 V									"					OE		"		"		"	"
		61										"		5.5 V								"					I/O_0		"		"		"	"
		62										"									5.5 V	"					I/O_7		"		"		"	"
I_{OS}	3011	63	1/	1/	1/	1/	1/	1/	1/	1/	1/	"	6/	GND								5.0 V					I/O_0	-30	-250	-30	-250	-30	-250	"
	"	64	"	"	"	"	"	"	"	"	"	"	"									"					O_1	"	"	"	"	"	"	"
	"	65	"	"	"	"	"	"	"	"	"	"	"									"					O_2	"	"	"	"	"	"	"
	"	66	"	"	"	"	"	"	"	"	"	"	"									"					O_3	"	"	"	"	"	"	"
	"	67	"	"	"	"	"	"	"	"	"	"	"									"					O_4	"	"	"	"	"	"	"
	"	68	"	"	"	"	"	"	"	"	"	"	"									"					O_5	"	"	"	"	"	"	"
	"	69	"	"	"	"	"	"	"	"	"	"	"									"					O_6	"	"	"	"	"	"	"
	"	70	"	"	"	"	"	"	"	"	"	"	"									"					I/O_7	"	"	"	"	"	"	"
I_{OZH}		71	"	"	"	"	"	"	"	"	"	"	7/	2.4 V								5.5 V					I/O_0		100		100		100	uA
		72	"	"	"	"	"	"	"	"	"	"	"									"					O_1		"		"		"	"
		73	"	"	"	"	"	"	"	"	"	"	"									"					O_2		"		"		"	"
		74	"	"	"	"	"	"	"	"	"	"	"									"					O_3		"		"		"	"
		75	"	"	"	"	"	"	"	"	"	"	"									"					O_4		"		"		"	"
		76	"	"	"	"	"	"	"	"	"	"	"									"					O_5		"		"		"	"
		77	"	"	"	"	"	"	"	"	"	"	"									"					O_6		"		"		"	"
		78	"	"	"	"	"	"	"	"	"	"	"									"					I/O_7		"		"		"	"
I_{OZL}		79	"	"	"	"	"	"	"	"	"	"	"		0.4 V							"					O_1		-100		-100		-100	"
		80	"	"	"	"	"	"	"	"	"	"	"									"					O_2		"		"		"	"
		81	"	"	"	"	"	"	"	"	"	"	"									"					O_3		"		"		"	"
		82	"	"	"	"	"	"	"	"	"	"	"									"					O_4		"		"		"	"
		83	"	"	"	"	"	"	"	"	"	"	"									"					O_5		"		"		"	"
		84	"	"	"	"	"	"	"	"	"	"	"									"					O_6		"		"		"	"
I_{CC}	3005	85										"										"					V_{CC}		180		180		180	mA
																												Subgroup 7 T_C = 25°C Min	Max	Subgroup 8 T_C = 125°C Min	Max	Subgroup 8 T_C = -55°C Min	Max	
Functional tests	3014	86	2/	2/	2/	2/	2/	2/	2/	2/	2/	GND	2/	2/	2/	2/	2/	2/	2/	2/	2/	4.5 V					All outputs		2/		2/		2/	

See footnotes at end of table.

TABLE III. Group A inspection for device type 03 - Continued.
Terminal conditions (pins not designated may be high ≥2.0 V, low ≤0.8 V, or open).

Symbol	MIL-STD-883 method	Case R,Y,Z	1	2	3	4	5	6	7	8	9	10	11	12	13	14	15	16	17	18	19	20	21	22	23	24	Measured terminal	Test limits Subgroup 9 T_C = 25°C Min	Subgroup 9 Max	Subgroup 10 T_C = 125°C Min	Subgroup 10 Max	Subgroup 11 T_C = -55°C Min	Subgroup 11 Max	Unit
		Test no.	CLK	I_0	I_1	I_2	I_3	I_4	I_5	I_6	I_7	GND	CE	I/O_0	O_1	O_2	O_3	O_4	O_5	O_6	I/O_7	V_{CC}												
t_{SO}	3003 Fig. 6	87	3/	3/	3/	3/	3/	3/	3/	3/	3/	GND	6/		4/ 8/	4/ 8/	4/ 8/	4/ 8/	4/ 8/	4/ 8/		3/					All outputs	10/	30	10/	30	10/	30	ns
$t_{P(CL)}$	"	88	"	"	"	"	"	"	"	"	"	"	"		"	"	"	"	"	"		"					"	10/	20	10/	20	10/	20	"
t_{PCL}	"	89	"	"	"	"	"	"	"	"	"	"	"		"	"	"	"	"	"		"					"		"		"		"	"
t_{PCH}	"	90	"	"	"	"	"	"	"	"	"	"	"		"	"	"	"	"	"		"					"		"		"		"	"
t_{PHL}	"	91	"	"	"	"	"	"	"	"	"	"		4/ 9/							4/ 9/	"					All I/OS		30		30		30	"
t_{PLH}	"	92	"	"	"	"	"	"	"	"	"	"		4/ 9/							4/ 9/	"					All I/OS		30		30		30	"
t_{PZH}	"	93	"	"	"	"	"	"	"	"	"	"	6/		4/ 8/	4/ 8/	4/ 8/	4/ 8/	4/ 8/	4/ 8/		"					All outputs		25		25		25	"
t_{PZL}	"	94	"	"	"	"	"	"	"	"	"	"	"		"	"	"	"	"	"		"					"		"		"		"	"
t_{PHZ}	"	95	"	"	"	"	"	"	"	"	"	"	"		"	"	"	"	"	"		"					"		"		"		"	"
t_{PLZ}	"	96	"	"	"	"	"	"	"	"	"	"	"		"	"	"	"	"	"		"					"		"		"		"	"
t_{PZH}	"	97	"	"	"	"	"	"	"	"	"	"		4/ 9/							4/ 9/	"					All I/OS		30		30		30	"
t_{PZL}	"	98	"	"	"	"	"	"	"	"	"	"		"							"	"					"		"		"		"	"
t_{PHZ}	"	99	"	"	"	"	"	"	"	"	"	"		"							"	"					"		"		"		"	"
t_{PLZ}	"	100	"	"	"	"	"	"	"	"	"	"		"							"	"					"		"		"		"	"
f_{MAX}	"	101	5/	5/	5/	5/	5/	5/	5/	5/	5/	"	6/		5/	5/	5/	5/	5/	5/		4.5 V					All	20		20		20		MHz

See footnotes at end of table.

TABLE III. Group A inspection for device type 04.
Terminal conditions (pins not designated may be high ≥2.0 V, low ≤0.8 V, or open).

Symbol	MIL-STD-883 method	Case R,Y,Z	1	2	3	4	5	6	7	8	9	10	11	12	13	14	15	16	17	18	19	20	21	22	23	24	Measured terminal	Test limits Subgroup 1 T_C = 25°C Min	Subgroup 1 Max	Subgroup 2 T_C = 125°C Min	Subgroup 2 Max	Subgroup 3 T_C = -55°C Min	Subgroup 3 Max	Unit
		Test no.	CLK	I_0	I_1	I_2	I_3	I_4	I_5	I_6	I_7	GND	OE	I/O_0	I/O_1	O_2	O_3	O_4	O_5	I/O_6	I/O_7	V_{CC}												
V_{IC}		1	-18 mA									"										4.5 V					CLOCK		-1.5		-1.5		-1.5	V
		2		-18 mA								"										"					I_0		"		"		"	"
		3			-18 mA							"										"					I_1		"		"		"	"
		4				-18 mA						"										"					I_2		"		"		"	"
		5					-18 mA					"										"					I_3		"		"		"	"
		6						-18 mA				"										"					I_4		"		"		"	"
		7							-18 mA			"										"					I_5		"		"		"	"
		8								-18 mA		"										"					I_6		"		"		"	"
		9									-18 mA	"										"					I_7		"		"		"	"
		10										"	-18 mA									"					OE		"		"		"	"
		11										"		-18 mA								"					I/O_0		"		"		"	"
		12										"			-18 mA							"					I/O_1		"		"		"	"
		13										"								-18 mA		"					I/O_6		"		"		"	"
		14										"									-18 mA	"					I/O_7		"		"		"	"
V_{OL}	3007	15	1/	1/	1/	1/	1/	1/	1/	1/	1/	"	6/	12 mA								"					I/O_0		0.5		0.5		0.5	"
	"	16	"	"	"	"	"	"	"	"	"	"	"		12 mA							"					I/O_1		"		"		"	"
	"	17	"	"	"	"	"	"	"	"	"	"	"			12 mA						"					I_2		"		"		"	"
	"	18	"	"	"	"	"	"	"	"	"	"	"				12 mA						"					I_3		"		"		"	"
	"	19	"	"	"	"	"	"	"	"	"	"	"					12 mA					"					I_4		"		"		"	"
	"	20	"	"	"	"	"	"	"	"	"	"	"						12 mA				"					I_5		"		"		"	"
	"	21	"	"	"	"	"	"	"	"	"	"	"							12 mA			"					I/O_6		"		"		"	"
	"	22	"	"	"	"	"	"	"	"	"	"	"								12 mA		"					I/O_7		"		"		"	"
V_{OH}	3006	23	"	"	"	"	"	"	"	"	"	"	"	-2 mA								"					I/O_0	2.4		2.4		2.4		"
	"	24	"	"	"	"	"	"	"	"	"	"	"		-2 mA							"					I/O_1	"		"		"		"
	"	25	"	"	"	"	"	"	"	"	"	"	"			-2 mA							"					O_2	"		"		"		"
	"	26	"	"	"	"	"	"	"	"	"	"	"				-2 mA						"					O_3	"		"		"		"
	"	27	"	"	"	"	"	"	"	"	"	"	"					-2 mA					"					O_4	"		"		"		"
	"	28	"	"	"	"	"	"	"	"	"	"	"						-2 mA				"					O_5	"		"		"		"
	"	29	"	"	"	"	"	"	"	"	"	"	"							-2 mA			"					I/O_6	"		"		"		"
	"	30	"	"	"	"	"	"	"	"	"	"	"								-2 mA		"					I/O_7	"		"		"		"
I_{IL}	3009	31	0.4 V									"										5.5 V					CLOCK		-0.25		-0.25		-0.25	mA
	"	32		0.4 V								"										"					I_0		"		"		"	"
	"	33			0.4 V							"										"					I_1		"		"		"	"
	"	34				0.4 V						"										"					I_2		"		"		"	"
	"	35					0.4 V					"										"					I_3		"		"		"	"
	"	36						0.4 V				"										"					I_4		"		"		"	"
	"	37							0.4 V			"										"					I_5		"		"		"	"
	"	38								0.4 V		"										"					I_6		"		"		"	"
	"	39									0.4 V	"										"					I_7		"		"		"	"
	"	40										"	0.4 V									"					OE		"		"		"	"
	"	41										"		0.4 V								"					I/O_0		"		"		"	"
	"	42										"			0.4 V							"					I/O_1		"		"		"	"
	"	43										"								0.4 V		"					I/O_6		"		"		"	"
	"	44										"									0.4 V	"					I/O_7		"		"		"	"

See footnotes at end of table.

TABLE III. Group A inspection for device type 04 - Continued.
Terminal conditions (pins not designated may be high ≥2.0 V, low ≤0.8 V, or open).

Symbol	MIL-STD-883 method	Case R,Y,Z	1	2	3	4	5	6	7	8	9	10	11	12	13	14	15	16	17	18	19	20	21	22	23	24	Measured terminal	Test limits Subgroup 1 T_C = 25°C Min	Subgroup 1 Max	Subgroup 2 T_C = 125°C Min	Subgroup 2 Max	Subgroup 3 T_C = -55°C Min	Subgroup 3 Max	Unit
		Test no.	CLK	I_0	I_1	I_2	I_3	I_4	I_5	I_6	I_7	GND	OE	I/O_0	I/O_1	O_2	O_3	O_4	O_5	I/O_6	I/O_7	V_{CC}												
I_{IH}	3010	45	2.4 V									GND										5.5 V					CLOCK		25		25		25	μA
"	"	46		2.4 V								"										"					I_0		"		"		"	"
"	"	47			2.4 V							"										"					I_1		"		"		"	"
"	"	48				2.4 V						"										"					I_2		"		"		"	"
"	"	49					2.4 V					"										"					I_3		"		"		"	"
"	"	50						2.4 V				"										"					I_4		"		"		"	"
"	"	51							2.4 V			"										"					I_5		"		"		"	"
"	"	52								2.4 V		"										"					I_6		"		"		"	"
"	"	53									2.4 V	"										"					I_7		"		"		"	"
"	"	54										"										"					OE		"		"		"	"
I_I		55	5.5 V									"										"					CLOCK		1.0		1.0		1.0	mA
		56		5.5 V								"										"					I_0		"		"		"	"
		57			5.5 V							"										"					I_1		"		"		"	"
		58				5.5 V						"										"					I_2		"		"		"	"
		59					5.5 V					"										"					I_3		"		"		"	"
		60						5.5 V				"										"					I_4		"		"		"	"
		61							5.5 V			"										"					I_5		"		"		"	"
		62								5.5 V		"										"					I_6		"		"		"	"
		63									5.5 V	"										"					I_7		"		"		"	"
		64										"	5.5 V									"					OE		"		"		"	"
		65										"		5.5 V								"					I/O_0		"		"		"	"
		66										"			5.5 V							"					I/O_1		"		"		"	"
		67										"								5.5 V		"					I/O_2		"		"		"	"
		68										"									5.5 V	"					I/O_3		"		"		"	"
I_{OS}	3011	69	1/	1/	1/	1/	1/	1/	1/	1/	1/	"	6/	GND	GND	GND						"					I/O_0	-30	-250	-30	-250	-30	-250	mA
"	"	70										"										"					I/O_1	"	"	"	"	"	"	"
"	"	71	"	"	"	"	"	"	"	"	"	"	"				GND					"					C_2	"	"	"	"	"	"	"
"	"	72	"	"	"	"	"	"	"	"	"	"	"					GND				"					C_3	"	"	"	"	"	"	"
"	"	73	"	"	"	"	"	"	"	"	"	"	"						GND			"					C_4	"	"	"	"	"	"	"
"	"	74	"	"	"	"	"	"	"	"	"	"	"							GND		"					C_5	"	"	"	"	"	"	"
"	"	75	"	"	"	"	"	"	"	"	"	"	"								GND	"					I/O_6	"	"	"	"	"	"	"
"	"	76	"	"	"	"	"	"	"	"	"	"	"									"					I/O_7	"	"	"	"	"	"	"
I_{OZH}		77	"	"	"	"	"	"	"	"	"	"	7/	2.4 V	2.4 V	2.4 V						"					I/O_0		100		100		100	μA
		78	"	"	"	"	"	"	"	"	"	"	"									"					I/O_1		"		"		"	"
		79	"	"	"	"	"	"	"	"	"	"	"									"					C_2		"		"		"	"
		80	"	"	"	"	"	"	"	"	"	"	"									"					C_3		"		"		"	"
		81	"	"	"	"	"	"	"	"	"	"	"									"					C_4		"		"		"	"
		82	"	"	"	"	"	"	"	"	"	"	"									"					C_5		"		"		"	"
		83	"	"	"	"	"	"	"	"	"	"	"									"					I/O_6		"		"		"	"
		84	"	"	"	"	"	"	"	"	"	"	"									"					I/O_7		"		"		"	"
I_{OZL}		85	"	"	"	"	"	"	"	"	"	"	"			0.4 V						"					C_2		-100		-100		-100	"
		86	"	"	"	"	"	"	"	"	"	"	"									"					C_3		"		"		"	"
		87	"	"	"	"	"	"	"	"	"	"	"									"					C_4		"		"		"	"
		88	"	"	"	"	"	"	"	"	"	"	"									"					C_5		"		"		"	"
I_{CC}	3005	89										"										"					I_{CC}		190		190		190	mA

See footnotes at end of table.

TABLE III. Group A inspection for device type 04 - Continued.
Terminal conditions (pins not designated may be high ≥2.0 V, low ≤0.8 V, or open).

Symbol	MIL-STD-883 method	Case R,Y,Z	1	2	3	4	5	6	7	8	9	10	11	12	13	14	15	16	17	18	19	20	21	22	23	24	Measured terminal	Tests limits Subgroup 7 T_C = 25°C Min	Subgroup 7 Max	Subgroup 8 T_C = 125°C Min	Subgroup 8 Max	Subgroup 8 T_C = -55°C Min	Subgroup 8 Max	Unit
		Test no.	CLK	I_0	I_1	I_2	I_3	I_4	I_5	I_6	I_7	GND	OE	I/O_0	I/O_1	O_2	O_3	O_4	O_5	I/O_6	I/O_7	V_{CC}												
Functional tests	3014	90	2/	2/	2/	2/	2/	2/	2/	2/	2/	GND	2/	2/	2/	2/	2/	2/	2/	2/	2/	4.5 V					All outputs		2/		2/		2/	
																												Subgroup 9 T_C = 25°C Min	Max	Subgroup 10 T_C = 125°C Min	Max	Subgroup 11 T_C = -55°C Min	Max	
t_{SU}	3003 Fig. 6	91	3/	3/	3/	3/	3/	3/	3/	3/	3/	GND	6/			4/ 8/	4/ 8/	4/ 8/	4/ 8/			3/					All outputs	10/	30	10/	30	10/	30	ns
$t_{P(CL)}$	"	92	"	"	"	"	"	"	"	"	"	"	"			"	"	"	"			"					"	10/	20	10/	20	10/	20	"
t_{PCH}	"	93	"	"	"	"	"	"	"	"	"	"	"			"	"	"	"			"					"		"		"		"	"
t_{PCL}	"	94	"	"	"	"	"	"	"	"	"	"	"			"	"	"	"			"					"		"		"		"	"
t_{PHL}	"	95	"	"	"	"	"	"	"	"	"	"		4/ 9/	4/ 9/					4/ 9/	4/ 9/	"					All I/OS		30		30		30	"
t_{PLH}	"	96	"	"	"	"	"	"	"	"	"	"		4/ 9/	4/ 9/					4/ 9/	4/ 9/	"					All I/OS		30		30		30	"
t_{PZH}	"	97	"	"	"	"	"	"	"	"	"	"	6/			4/ 8/	4/ 8/	4/ 8/	4/ 8/			"					All outputs		25		25		25	"
t_{PZL}	"	98	"	"	"	"	"	"	"	"	"	"	"			"	"	"	"			"					"		"		"		"	"
t_{PHZ}	"	99	"	"	"	"	"	"	"	"	"	"	"			"	"	"	"			"					"		"		"		"	"
t_{PLZ}	"	100	"	"	"	"	"	"	"	"	"	"	"			"	"	"	"			"					"		"		"		"	"
t_{PZH}	"	101	"	"	"	"	"	"	"	"	"	"		4/ 9/	4/ 9/					4/ 9/	4/ 9/	"					All I/OS		30		30		30	"
t_{PZL}	"	102	"	"	"	"	"	"	"	"	"	"		4/ 9/	4/ 9/					4/ 9/	4/ 9/	"					"		"		"		"	"
t_{PLZ}	"	103	"	"	"	"	"	"	"	"	"	"										"					"		"		"		"	"
t_{PHZ}	"	104	"	"	"	"	"	"	"	"	"	"										"					"		"		"		"	"
f_{MAX}	"	105	5/	5/	5/	5/	5/	5/	5/	5/	5/	"	6/			3/	5/	5/	5/			4.5 V					All	20		20		20		MHz

See footnotes at end of table.

TABLE III. Group A inspection for device type 05.
Terminal conditions (pins not designated may be high ≥2.0 V, low ≤0.8 V, or open).

Subgroup	Symbol	MIL-STD-883 method	Cases R,2,Y Test no.	1 CLOCK	2 I_0	3 I_1	4 C/I_2	5 C/I_3	6 C/I_4	7 C/I_5	8 C/I_6	9 I_7	10 GND	11 OE	12 I/O_1	13 I/O_2	14 O_3	15 O_4	16 O_5	17 O_6	18 I/O_7	19 I/O_8	20 V_{CC}	Measured terminal	Test limits Min	Test limits Max	Unit
T_C = 25°C [1]	V_{IC}		1	-18 mA									GND										4.5 V	CLOCK		-1.5	V
			2		-18 mA								"										"	I_0		"	"
			3			-18 mA							"										"	I_1		"	"
			4				-18 mA						"										"	I_2		"	"
			5					-18 mA					"										"	C/I_3		"	"
			6						-18 mA				"										"	C/I_4		"	"
			7							-18 mA			"										"	C/I_5		"	"
			8								-18 mA		"										"	C/I_6		"	"
			9									-18 mA	"										"	I_7		"	"
			10										"	-18 mA									"	OE		"	"
			11										"		-18 mA								"	I/O_1		"	"
			12										"			-18 mA							"	I/O_2		"	"
			13										"								-18 mA		"	I/O_7		"	"
			14										"									-18 mA	"	I/O_8		"	"
	V_{OL}	3007	15	1/	1/	1/	1/	1/	1/	1/	1/	1/	"	6/	12 mA								"	I/O_1		0.5	"
		"	16	"	"	"	"	"	"	"	"	"	"	"		12 mA								"	I/O_2		"	"
		"	17	"	"	"	"	"	"	"	"	"	"	"			12 mA							"	O_3		"	"
		"	18	"	"	"	"	"	"	"	"	"	"	"				12 mA						"	O_4		"	"
		"	19	"	"	"	"	"	"	"	"	"	"	"					12 mA					"	O_5		"	"
		"	20	"	"	"	"	"	"	"	"	"	"	"						12 mA				"	O_6		"	"
		"	21	"	"	"	"	"	"	"	"	"	"	"							12 mA			"	I/O_7		"	"
		"	22	"	"	"	"	"	"	"	"	"	"	"								12 mA		"	I/O_8		"	"
	V_{OH}	3006	23	"	"	"	"	"	"	"	"	"	"	"	-2 mA								"	I/O_1	2.4		"
		"	24	"	"	"	"	"	"	"	"	"	"	"		-2 mA								"	I/O_2	"		"
		"	25	"	"	"	"	"	"	"	"	"	"	"			-2 mA							"	O_3	"		"
		"	26	"	"	"	"	"	"	"	"	"	"	"				-2 mA						"	O_4	"		"
		"	27	"	"	"	"	"	"	"	"	"	"	"					-2 mA					"	O_5	"		"
		"	28	"	"	"	"	"	"	"	"	"	"	"						-2 mA				"	O_6	"		"
		"	29	"	"	"	"	"	"	"	"	"	"	"							-2 mA			"	I/O_7	"		"
		"	30	"	"	"	"	"	"	"	"	"	"	"								-2 mA		"	I/O_8	"		"
	I_{IL}	3009	31	0.4 V									"										5.5 V	CLOCK		-0.25	mA
		"	32		0.4 V								"										"	I_0		"	"
		"	33			0.4 V							"										"	I_1		"	"
		"	34				0.4 V						"										"	C/I_2		"	"
		"	35					0.4 V					"										"	C/I_3		"	"
		"	36						0.4 V				"										"	C/I_4		"	"
		"	37							0.4 V			"										"	C/I_5		"	"
		"	38								0.4 V		"										"	C/I_6		"	"
		"	39									0.4 V	"										"	I_7		"	"
		"	40										"	0.4 V									"	OE		"	"
		"	41										"		0.4 V								"	I/O_1		"	"
		"	42										"			0.4 V							"	I/O_2		"	"
		"	43										"								0.4 V		"	I/O_7		"	"
		"	44										"									0.4 V	"	I/O_8		"	"
	I_{IH}	3010	45	2.4 V									"										"	CLOCK		25	uA
		"	46		2.4 V								"										"	I_0		"	"
		"	47			2.4 V							"										"	I_1		"	"
		"	48				2.4 V						"										"	C/I_2		"	"
		"	49					2.4 V					"										"	C/I_3		"	"
		"	50						2.4 V				"										"	C/I_4		"	"
		"	51							2.4 V			"										"	C/I_5		"	"
		"	52								2.4 V		"										"	C/I_6		"	"
		"	53									2.4 V	"										"	I_7		"	"
		"	54										"	2.4 V									"	OE		"	"
	I_I		55	5.5 V									"										"	CLOCK		1.0	mA
			56		5.5 V								"										"	I_0		"	"
			57			5.5 V							"										"	I_1		"	"
			58				5.5 V						"										"	C/I_2		"	"
			59					5.5 V					"										"	C/I_3		"	"
			60						5.5 V				"										"	C/I_4		"	"
			61							5.5 V			"										"	C/I_5		"	"
			62								5.5 V		"										"	C/I_6		"	"
			63									5.5 V	"										"	I_7		"	"
			64										"	5.5 V									"	OE		"	"
			65										"		5.5 V								"	I/O_1		"	"
			66										"			5.5 V							"	I/O_2		"	"
			67										"								5.5 V		"	I/O_7		"	"
			68										"									5.5 V	"	I/O_8		"	"

See footnotes at end of table.

TABLE III. Group A inspection for device type 05 - Continued.
Terminal conditions (pins not designated may be high ≥2.0 V, low ≤0.8 V, or open).

Subgroup	Symbol	MIL-STD-883 method	Cases R,X,Y Test no.	1 CLOCK	2 I_0	3 I_1	4 C/I_2	5 C/I_3	6 C/I_4	7 C/I_5	8 C/I_6	9 I_7	10 GND	11 $\overline{OE}$	12 I/O_1	13 I/O_2	14 O_3	15 O_4	16 O_5	17 O_6	18 I/O_7	19 I/O_8	20 V_{CC}	Measured terminal	Test limits Min	Test limits Max	Unit
1 T_C = 25°C	I_{OS}	3011	69	1/	1/	1/	1/	1/	1/	1/	1/	1/	"	6/	GND								5.0 V	I/O_1	-30	-250	mA
		"	70	"	"	"	"	"	"	"	"	"	"	"		GND								"	I/O_2	"	"	"
		"	71	"	"	"	"	"	"	"	"	"	"	"			GND							"	O_3	"	"	"
		"	72	"	"	"	"	"	"	"	"	"	"	"				GND						"	O_4	"	"	"
		"	73	"	"	"	"	"	"	"	"	"	"	"					GND					"	O_5	"	"	"
		"	74	"	"	"	"	"	"	"	"	"	"	"						GND				"	O_6	"	"	"
		"	75	"	"	"	"	"	"	"	"	"	"	"							GND			"	I/O_7	"	"	"
		"	76	"	"	"	"	"	"	"	"	"	"	"								GND		"	I/O_8	"	"	"
	I_{OZH}		77	"	"	"	"	"	"	"	"	"	"	7/	2.4 V								5.5 V	I/O_1		100	μA
			78	"	"	"	"	"	"	"	"	"	"	"		2.4 V							"	I/O_2		"	"
			79	"	"	"	"	"	"	"	"	"	"	"			2.4 V						"	O_3		"	"
			80	"	"	"	"	"	"	"	"	"	"	"				2.4 V					"	O_4		"	"
			81	"	"	"	"	"	"	"	"	"	"	"					2.4 V				"	O_5		"	"
			82	"	"	"	"	"	"	"	"	"	"	"						2.4 V			"	O_6		"	"
			83	"	"	"	"	"	"	"	"	"	"	"							2.4 V		"	I/O_7		"	"
			84	"	"	"	"	"	"	"	"	"	"	"								2.4 V	"	I/O_8		"	"
	I_{OZL}		85	"	"	"	"	"	"	"	"	"	"	"			0.4 V						"	O_3		-100	"
			86	"	"	"	"	"	"	"	"	"	"	"				0.4 V					"	O_4		"	"
			87	"	"	"	"	"	"	"	"	"	"	"					0.4 V				"	O_5		"	"
			88	"	"	"	"	"	"	"	"	"	"	"						0.4 V			"	O_6		"	"
	I_{CC}	3005	89										"										"	V_{CC}		225	mA
2	Same tests, terminal conditions, and limits as for subgroup 1, except T_C = 125°C.																										
3	Same tests, terminal conditions, and limits as for subgroup 1, except T_C = -55°C.																										
7 T_C = 25°C	Functional tests	3014	90	2/	2/	2/	2/	2/	2/	2/	2/	2/	GND	2/	2/	2/	2/	2/	2/	2/	2/	2/	4.5 V	All outputs		2/	
8	Same tests, terminal conditions and limits as for subgroup 7, except T_C = 125°C and -55°C.																										
9 T_C = 25°C	t_{SU}	3003 Figure 6	91	3/	3/	3/	3/	3/	3/	3/	3/	3/	GND	6/			4/ 8/	4/ 8/	4/ 8/	4/ 8/			3/	All outputs	10/	55	ns
	$t_{P(CL)}$	"	92	"	"	"	"	"	"	"	"	"	"	"									"	"	10/	25	"
	t_{PC}	"	93	"	"	"	"	"	"	"	"	"	"	"									"	"			"
	t_{PCI}	"	94	"	"	"	"	"	"	"	"	"	"	"									"	"			"
	t_{PHL}	"	95	"	"	"	"	"	"	"	"	"	"	"		4/ 9/	4/ 9/					4/ 9/	4/ 9/	"	All I/OS		45	"
	t_{PLH}	"	96	"	"	"	"	"	"	"	"	"	"	"		4/ 9/	4/ 9/					4/ 9/	4/ 9/	"	All I/OS		45	"
	t_{PZH}	"	97	"	"	"	"	"	"	"	"	"	"	"	IN			4/ 8/	4/ 8/	4/ 8/	4/ 8/				All outputs		25	"
	t_{PZL}	"	98	"	"	"	"	"	"	"	"	"	"	"										"			"
	t_{PHZ}	"	99	"	"	"	"	"	"	"	"	"	"	"										"			"
	t_{PLZ}	"	100	"	"	"	"	"	"	"	"	"	"	"										"			"
	t_{PZH}	"	101	"	"	"	"	"	"	"	"	"	"	"		4/ 9/	4/ 9/					4/ 9/	4/ 9/	"	All I/OS		45	"
	t_{PZL}	"	102	"	"	"	"	"	"	"	"	"	"	"										"			"
	t_{PHZ}	"	103	"	"	"	"	"	"	"	"	"	"	"										"			"
	t_{PLZ}	"	104	"	"	"	"	"	"	"	"	"	"	"										"			"
	f_{MAX}	"	105	5/	5/	5/	5/	5/	5/	5/	5/	5/		6/	5/	5/	5/	5/	5/	5/	5/	5/	4.5 V	All	12		MHz
10	Same tests, terminal conditions, and limits as for subgroup 9, except T_C = 125°C.																										
11	Same tests, terminal conditions, and limits as for subgroup 9, except T_C = -55°C.																										

See footnotes at end of table.

TABLE III. Group A inspection for device type 06.
Terminal conditions (pins not designated may be high ≥2.0 V, low ≤0.8 V, or open).

Subgroup	Symbol	MIL-STD-883 method	Cases R,X,Y Test no.	1 CLOCK	2 I_0	3 I_1	4 C/I_2	5 C/I_3	6 C/I_4	7 C/I_5	8 I_6	9 I_7	10 GND	11 OE	12 I/O_0	13 I/O_1	14 O_2	15 O_3	16 O_4	17 O_5	18 I/O_6	19 I/O_7	20 V_{CC}	Measured terminal	Test limits Min	Test limits Max	Unit
T_C = 25°C	V_{IC}		1	-18 mA									GND										4.5 V	CLOCK		-1.5	V
			2		-18 mA								"										"	I_0		"	"
			3			-18 mA							"										"	I_1		"	"
			4				-18 mA						"										"	C/I_2		"	"
			5					-18 mA					"										"	C/I_3		"	"
			6						-18 mA				"										"	C/I_4		"	"
			7							-18 mA			"										"	C/I_5		"	"
			8								-18 mA		"										"	I_6		"	"
			9									-18 mA	"										"	I_7		"	"
			10										"	-18 mA									"	OE		"	"
			11										"		-18 mA								"	I/O_0		"	"
			12										"			-18 mA							"	I/O_1		"	"
			13										"								-18 mA		"	I/O_6		"	"
			14										"									-18 mA	"	I/O_7		"	"
	V_{OL}	3007	15	1/	1/	1/	1/	1/	1/	1/	1/	1/	"	6/	12 mA								"	I/O_0		0.5	"
		"	16	"	"	"	"	"	"	"	"	"	"	"		12 mA								"	I/O_1		"	"
		"	17	"	"	"	"	"	"	"	"	"	"	"			12 mA							"	O_2		"	"
		"	18	"	"	"	"	"	"	"	"	"	"	"				12 mA						"	O_3		"	"
		"	19	"	"	"	"	"	"	"	"	"	"	"					12 mA					"	O_4		"	"
		"	20	"	"	"	"	"	"	"	"	"	"	"						12 mA				"	O_5		"	"
		"	21	"	"	"	"	"	"	"	"	"	"	"							12 mA			"	I/O_6		"	"
		"	22	"	"	"	"	"	"	"	"	"	"	"								12 mA		"	I/O_7		"	"
	V_{OH}	3006	23	"	"	"	"	"	"	"	"	"	"	"	-2 mA									"	I/O_0	2.4		"
		"	24	"	"	"	"	"	"	"	"	"	"	"		-2 mA								"	I/O_1	"		"
		"	25	"	"	"	"	"	"	"	"	"	"	"			-2 mA							"	O_2	"		"
		"	26	"	"	"	"	"	"	"	"	"	"	"				-2 mA						"	O_3	"		"
		"	27	"	"	"	"	"	"	"	"	"	"	"					-2 mA					"	O_4	"		"
		"	28	"	"	"	"	"	"	"	"	"	"	"						-2 mA				"	O_5	"		"
		"	29	"	"	"	"	"	"	"	"	"	"	"							-2 mA			"	I/O_6	"		"
		"	30	"	"	"	"	"	"	"	"	"	"	"								-2 mA		"	I/O_7	"		"
	I_{IL}	3009	31	0.4 V									"										5.5 V	CLOCK		-0.25	mA
		"	32		0.4 V								"										"	I_0		"	"
		"	33			0.4 V							"										"	I_1		"	"
		"	34				0.4 V						"										"	C/I_2		"	"
		"	35					0.4 V					"										"	C/I_3		"	"
		"	36						0.4 V				"										"	C/I_4		"	"
		"	37							0.4 V			"										"	C/I_5		"	"
		"	38								0.4 V		"										"	I_6		"	"
		"	39									0.4 V	"										"	I_7		"	"
		"	40										"	0.4 V									"	OE		"	"
		"	41										"		0.4 V								"	I/O_0		"	"
		"	42										"			0.4 V							"	I/O_1		"	"
		"	43										"								0.4 V		"	I/O_6		"	"
		"	44										"									0.4 V	"	I/O_7		"	"
	I_{IH}	3010	45	2.4 V									"										"	CLOCK		25	μA
		"	46		2.4 V								"										"	I_0		"	"
		"	47			2.4 V							"										"	I_1		"	"
		"	48				2.4 V						"										"	C/I_2		"	"
		"	49					2.4 V					"										"	C/I_3		"	"
		"	50						2.4 V				"										"	C/I_4		"	"
		"	51							2.4 V			"										"	C/I_5		"	"
		"	52								2.4 V		"										"	I_6		"	"
		"	53									2.4 V	"										"	I_7		"	"
		"	54										"	2.4 V									"	OE		"	"
	I_I		55	5.5 V									"										"	CLOCK		1.0	mA
			56		5.5 V								"										"	I_0		"	"
			57			5.5 V							"										"	I_1		"	"
			58				5.5 V						"										"	C/I_2		"	"
			59					5.5 V					"										"	C/I_3		"	"
			60						5.5 V				"										"	C/I_4		"	"
			61							5.5 V			"										"	C/I_5		"	"
			62								5.5 V		"										"	I_6		"	"
			63									5.5 V	"										"	I_7		"	"
			64										"	5.5 V									"	OE		"	"
			65										"		5.5 V								"	I/O_0		"	"
			66										"			5.5 V							"	I/O_1		"	"
			67										"								5.5 V		"	I/O_6		"	"
			68										"									5.5 V	"	I/O_7		"	"

See footnotes at end of table.

TABLE III. Group A inspection for device type 06 - Continued.
Terminal conditions (pins not designated may be high ≥2.0 V, low ≤0.8 V, or open).

Subgroup	Symbol	MIL-STD-883 method	Cases t,X,Y Test no.	1 CLOCK	2 I_0	3 I_1	4 C/I_2	5 C/I_3	6 C/I_4	7 C/I_5	8 I_6	9 I_7	10 GND	11 OE	12 I/O_0	13 I/O_1	14 O_2	15 O_3	16 O_4	17 O_5	18 I/O_6	19 I/O_7	20 V_{CC}	Measured terminal	Test limits Min	Test limits Max	Unit
1 T_C = 25°C	I_{OS}	3011	69	1/	1/	1/	1/	1/	1/	1/	1/	1/	GND	6/	GND	GND	GND	GND	GND	GND	GND	GND	5.0 V	I/O_0	-30	-250	mA
			70																					I/O_1			
			71																					O_2			
			72																					O_3			
			73																					O_4			
			74																					O_5			
			75																					I/O_6			
			76																					I/O_7			
	I_{OZH}		77	1/	1/	1/	1/	1/	1/	1/	1/	1/		7/	2.4 V	2.4 V	2.4 V	2.4 V	2.4 V	2.4 V	2.4 V	2.4 V	5.5 V	I/O_0		100	μA
			78																					I/O_1			
			79																					O_2			
			80																					O_3			
			81																					O_4			
			82																					O_5			
			83																					I/O_6			
			84																					I/O_7			
	I_{OZL}		85														0.4 V	0.4 V	0.4 V	0.4 V				O_2		-100	
			86																					O_3			
			87																					O_4			
			88																					O_5			
	I_{CC}	3005	89																					V_{CC}		240	mA
2	Same tests, terminal conditions, and limits as for subgroup 1, except T_C = 125°C.																										
3	Same tests, terminal conditions, and limits as for subgroup 1, except T_C = -55°C.																										
7 T_C = 25°C	Functional tests	3014	90	2/	2/	2/	2/	2/	2/	2/	2/	2/	GND	2/	2/	2/	2/	2/	2/	2/	2/	2/	4.5 V	All outputs		2/	
8	Same tests, terminal conditions and limits as for subgroup 7, except T_C = 125°C and -55°C.																										
9 T_C = 25°C	t_{SL}	3003 Figure 6	91	3/	3/	3/	3/	3/	3/	3/	3/	3/	GND	6/			4/ 8/	4/ 8/	4/ 8/	4/ 8/			3/	All outputs	10/	55	ns
	$t_{P(CL)}$		92																						10/	25	
	t_{PLL}		93																								
	t_{PLH}		94												4/ 9/	4/ 9/					4/ 9/	4/ 9/		All I/Os		45	
	t_{PHL}		95												4/ 9/	4/ 9/					4/ 9/	4/ 9/		All I/Os		45	
	t_{PHH}		96											IN			4/ 8/	4/ 8/	4/ 8/	4/ 8/				All outputs		25	
	t_{PZH}		97																								
	t_{PHL}		98																								
	t_{PHZ}		99																								
	t_{PLZ}		100												4/ 9/	4/ 9/					4/ 9/	4/ 9/		All I/Os		45	
	t_{PZH}		101																								
	t_{PZL}		102																								
	t_{PHZ}		103																								
	t_{PLZ}		104																								
	f_{MAX}		105	5/	5/	5/	5/	5/	5/	5/	5/	5/		6/	5/	5/	5/	5/	5/	5/	5/	5/	4.5 V	All	12		MHz
10	Same tests, terminal conditions and limits as for subgroup 9, except T_C = 125°C.																										
11	Same tests, terminal conditions and limits as for subgroup 9, except T_C = -55°C.																										

See footnotes at end of table.

TABLE III. Group A inspection for device type 07.
Terminal conditions (pins not designated may be high ≥2.0 V, low ≤0.8 V, or open).

Symbol	MIL-STD-883 method	Case R,Y,2	1	2	3	4	5	6	7	8	9	10	11	12	13	14	15	16	17	18	19	20	21	22	23	24	Measured terminal	Test limits Subgroup 1 T_C = 25°C Min	Subgroup 1 Max	Subgroup 2 T_C = 125°C Min	Subgroup 2 Max	Subgroup 3 T_C = -55°C Min	Subgroup 3 Max	Unit
		Test no.	I_0	I_1	I_2	I_3	I_4	I_5	I_6	I_7	I_8	GND	I_9	O_0	I/O_1	I/O_2	I/O_3	I/O_4	I/O_5	I/O_6	O_7	V_{CC}												
V_{IC}		1	-18 mA									GND										4.5 V					I_0		-1.5		-1.5		-1.5	V
		2		-18 mA								"										"					I_1		"		"		"	"
		3			-18 mA							"										"					I_2		"		"		"	"
		4				-18 mA						"										"					I_3		"		"		"	"
		5					-18 mA					"										"					I_4		"		"		"	"
		6						-18 mA				"										"					I_5		"		"		"	"
		7							-18 mA			"										"					I_6		"		"		"	"
		8								-18 mA		"										"					I_7		"		"		"	"
		9									-18 mA	"										"					I_8		"		"		"	"
		10										"	-18 mA									"					I_9		"		"		"	"
		11										"			-18 mA							"					I/O_1		"		"		"	"
		12										"				-18 mA						"					I/O_2		"		"		"	"
		13										"					-18 mA					"					I/O_3		"		"		"	"
		14										"						-18 mA				"					I/O_4		"		"		"	"
		15										"							-18 mA			"					I/O_5		"		"		"	"
		16										"								-18 mA		"					I/O_6		"		"		"	"
V_{OL}	3007	17	1/	1/	1/	1/	1/	1/	1/	1/	1/	"	1/	12 mA								"					O_0		0.5		0.5		0.5	"
	"	18	"	"	"	"	"	"	"	"	"	"	"		12 mA							"					I/O_1		"		"		"	"
	"	19	"	"	"	"	"	"	"	"	"	"	"			12 mA						"					I/O_2		"		"		"	"
	"	20	"	"	"	"	"	"	"	"	"	"	"				12 mA					"					I/O_3		"		"		"	"
	"	21	"	"	"	"	"	"	"	"	"	"	"					12 mA				"					I/O_4		"		"		"	"
	"	22	"	"	"	"	"	"	"	"	"	"	"						12 mA			"					I/O_5		"		"		"	"
	"	23	"	"	"	"	"	"	"	"	"	"	"							12 mA		"					I/O_6		"		"		"	"
	"	24	"	"	"	"	"	"	"	"	"	"	"								12 mA	"					O_7		"		"		"	"
V_{OH}	3006	25	"	"	"	"	"	"	"	"	"	"	"	-2 mA								"					O_0	2.4		2.4		2.4		"
	"	26	"	"	"	"	"	"	"	"	"	"	"		-2 mA							"					I/O_1	"		"		"		"
	"	27	"	"	"	"	"	"	"	"	"	"	"			-2 mA							"					I/O_2	"		"		"		"
	"	28	"	"	"	"	"	"	"	"	"	"	"				-2 mA						"					I/O_3	"		"		"		"
	"	29	"	"	"	"	"	"	"	"	"	"	"					-2 mA					"					I/O_4	"		"		"		"
	"	30	"	"	"	"	"	"	"	"	"	"	"						-2 mA				"					I/O_5	"		"		"		"
	"	31	"	"	"	"	"	"	"	"	"	"	"							-2 mA			"					I/O_6	"		"		"		"
	"	32	"	"	"	"	"	"	"	"	"	"	"								-2 mA		"					O_7	"		"		"		"
I_{IL}	3009	33	0.4 V									"										5.5 V					I_0		-0.25		-0.25		-0.25	mA
	"	34		0.4 V								"										"					I_1		"		"		"	"
	"	35			0.4 V							"										"					I_2		"		"		"	"
	"	36				0.4 V						"										"					I_3		"		"		"	"
	"	37					0.4 V					"										"					I_4		"		"		"	"
	"	38						0.4 V				"										"					I_5		"		"		"	"
	"	39							0.4 V			"										"					I_6		"		"		"	"
	"	40								0.4 V		"										"					I_7		"		"		"	"
	"	41									0.4 V	"										"					I_8		"		"		"	"
	"	42										"	0.4 V									"					I_9		"		"		"	"
	"	43										"			0.4 V							"					I/O_1		"		"		"	"
	"	44										"				0.4 V						"					I/O_2		"		"		"	"
	"	45										"					0.4 V					"					I/O_3		"		"		"	"
	"	46										"						0.4 V				"					I/O_4		"		"		"	"
	"	47										"							0.4 V			"					I/O_5		"		"		"	"
	"	48										"								0.4 V		"					I/O_6		"		"		"	"

See footnotes at end of table.

TABLE III. Group A inspection for device type 07 - Continued.
Terminal conditions (pins not designated may be high ≥2.0 V, low ≤0.8 V, or open).

Symbol	MIL-STD-883 method	Case R,Y,Z	1	2	3	4	5	6	7	8	9	10	11	12	13	14	15	16	17	18	19	20	21	22	23	24	Measured terminal	Test limits Subgroup 1 T_C = 25°C Min	Subgroup 1 Max	Subgroup 2 T_C = 125°C Min	Subgroup 2 Max	Subgroup 3 T_C = -55°C Min	Subgroup 3 Max	Unit
		Test no.	I_0	I_1	I_2	I_3	I_4	I_5	I_6	I_7	I_8	GND	I_9	O_0	I/O_1	I/O_2	I/O_3	I/O_4	I/O_5	I/O_6	O_7	V_{CC}												
I_{I4}	3010	49	2.4 V									GND										5.5 V					I_0		25		25		25	μA
	"	50		2.4 V								"										"					I_1		"		"		"	"
	"	51			2.4 V							"										"					I_2		"		"		"	"
	"	52				2.4 V						"										"					I_3		"		"		"	"
	"	53					2.4 V					"										"					I_4		"		"		"	"
	"	54						2.4 V				"										"					I_5		"		"		"	"
	"	55							2.4 V			"										"					I_6		"		"		"	"
	"	56								2.4 V		"										"					I_7		"		"		"	"
	"	57									2.4 V	"										"					I_8		"		"		"	"
	"	58										"	2.4 V									"					I_9		"		"		"	"
I_I		59	5.5 V									"										"					I_0		1.0		1.0		1.0	mA
		60		5.5 V								"										"					I_1		"		"		"	"
		61			5.5 V							"										"					I_2		"		"		"	"
		62				5.5 V						"										"					I_3		"		"		"	"
		63					5.5 V					"										"					I_4		"		"		"	"
		64						5.5 V				"										"					I_5		"		"		"	"
		65							5.5 V			"										"					I_6		"		"		"	"
		66								5.5 V		"										"					I_7		"		"		"	"
		67									5.5 V	"										"					I_8		"		"		"	"
		68										"	5.5 V									"					I_9		"		"		"	"
		69										"			5.5 V							"					I/O_1		"		"		"	"
		70										"				5.5 V						"					I/O_2		"		"		"	"
		71										"					5.5 V					"					I/O_3		"		"		"	"
		72										"						5.5 V				"					I/O_4		"		"		"	"
		73										"							5.5 V			"					I/O_5		"		"		"	"
		74										"								5.5 V		"					I/O_6		"		"		"	"
I_{OS}	3011	75	1/	1/	1/	1/	1/	1/	1/	1/	1/	"	1/	GND	GND	GND						5.0 V					O_0	-30	-250	-30	-250	-30	-250	"
	"	76	"	"	"	"	"	"	"	"	"	"	"				GND	GND	GND	GND	GND		"					I/O_1	"	"	"	"	"	"	"
	"	77	"	"	"	"	"	"	"	"	"	"	"										"					I/O_2	"	"	"	"	"	"	"
	"	78	"	"	"	"	"	"	"	"	"	"	"										"					I/O_3	"	"	"	"	"	"	"
	"	79	"	"	"	"	"	"	"	"	"	"	"										"					I/O_4	"	"	"	"	"	"	"
	"	80	"	"	"	"	"	"	"	"	"	"	"										"					I/O_5	"	"	"	"	"	"	"
	"	81	"	"	"	"	"	"	"	"	"	"	"										"					I/O_6	"	"	"	"	"	"	"
	"	82	"	"	"	"	"	"	"	"	"	"	"															O_7	"	"	"	"	"	"	"
I_{OZH}		83	"	"	"	"	"	"	"	"	"	"	"	2.4 V	2.4 V	2.4 V						5.5 V					O_0		100		100		100	μA
		84	"	"	"	"	"	"	"	"	"	"	"									"					I/O_1		"		"		"	"
		85	"	"	"	"	"	"	"	"	"	"	"									"					I/O_2		"		"		"	"
		86	"	"	"	"	"	"	"	"	"	"	"									"					I/O_3		"		"		"	"
		87	"	"	"	"	"	"	"	"	"	"	"									"					I/O_4		"		"		"	"
		88	"	"	"	"	"	"	"	"	"	"	"									"					I/O_5		"		"		"	"
		89	"	"	"	"	"	"	"	"	"	"	"									"					I/O_6		"		"		"	"
		90	"	"	"	"	"	"	"	"	"	"	"															O_7		"		"		"	"
I_{OZL}		91	"	"	"	"	"	"	"	"	"	"	"	0.4 V								"					O_0		-100		-100		-100	"
		92	"	"	"	"	"	"	"	"	"	"	"								0.4 V		"					O_7		-100		-100		-100	
I_{CC}	3005	93										"										"					V_{CC}		90		90		90	mA

See footnotes at end of table.

TABLE III. Group A inspection for device type 07 - Continued.
Terminal conditions (pins not designated may be high ≥2.0 V, low ≤0.8 V, or open).

Symbol	MIL-STD-883 method	Case t,Y,2	1	2	3	4	5	6	7	8	9	10	11	12	13	14	15	16	17	18	19	20	21	22	23	24	Measured terminal	Test limits						Unit
																												Subgroup 7 T_C = 25°C		Subgroup 8 T_C = 125°C		Subgroup 8 T_C = -55°C		
		Test no.	I_0	I_1	I_2	I_3	I_4	I_5	I_6	I_7	I_8	GND	I_9	O_0	I/O_1	I/O_2	I/O_3	I/O_4	I/O_5	I/O_6	O_7	V_{CC}						Min	Max	Min	Max	Min	Max	
Functional tests	3014	94	2/	2/	2/	2/	2/	2/	2/	2/	2/	GND	2/	2/	2/	2/	2/	2/	2/	2/	2/	4.5 V					All outputs		2/		2/		2/	
																												Subgroup 9 T_C = 25°C		Subgroup 10 T_C = 125°C		Subgroup 11 T_C = -55°C		
																												Min	Max	Min	Max	Min	Max	
t_{PHL}	3003	95	3/	3/	3/	3/	3/	3/	3/	3/	3/	GND	3/	4/ 8/	4/ 8/	4/ 8/	4/ 8/	4/ 8/	4/ 8/	4/ 8/	3/	3/					All outputs and I/OS		50		50		50	ns
t_{PLH}	"	96	"	"	"	"	"	"	"	"	"	"	"	"	"	"	"	"	"	"	"	"							50		50		50	"
t_{PZH}	"	97	"	"	"	"	"	"	"	"	"	"	"	"	"	"	"	"	"	"	"	"							45		45		45	"
t_{PZL}	"	98	"	"	"	"	"	"	"	"	"	"	"	"	"	"	"	"	"	"	"	"							"		"		"	"
t_{PHZ}	"	99	"	"	"	"	"	"	"	"	"	"	"	"	"	"	"	"	"	"	"	"							"		"		"	"
t_{PLZ}	"	100	"	"	"	"	"	"	"	"	"	"	"	"	"	"	"	"	"	"	"	"							"		"		"	"

See footnotes at end of table.

TABLE III. Group A inspection for device type 08.
Terminal conditions (pins not designated may be high ≥2.0 V, low ≤0.8 V, or open).

Symbol	MIL-STD-883 method	Case R,Y,Z	1	2	3	4	5	6	7	8	9	10	11	12	13	14	15	16	17	18	19	20	21	22	23	24	Measured terminal	Test limits Subgroup 1 T_C = 25°C Min	Subgroup 1 Max	Subgroup 2 T_C = 125°C Min	Subgroup 2 Max	Subgroup 3 T_C = -55°C Min	Subgroup 3 Max	Unit
		Test no.	CLK	I_0	I_1	I_2	I_3	I_4	I_5	I_6	I_7	GND	OE	O_0	O_1	O_2	O_3	O_4	O_5	O_6	O_7	V_{CC}												
V_{IC}		1	-18 mA									GND										4.5					CLOCK		-1.5		-1.5		-1.5	V
		2		-18 mA								"										"					I_0		"		"		"	"
		3			-18 mA							"										"					I_1		"		"		"	"
		4				-18 mA						"										"					I_2		"		"		"	"
		5					-18 mA					"										"					I_3		"		"		"	"
		6						-18 mA				"										"					I_4		"		"		"	"
		7							-18 mA			"										"					I_5		"		"		"	"
		8								-18 mA		"										"					I_6		"		"		"	"
		9									-18 mA	"										"					I_7		"		"		"	"
		10										"	-18 mA									"					OE		"		"		"	"
V_{OL}	3007	11	1/	1/	1/	1/	1/	1/	1/	1/	1/	"	5/	12 mA								"					O_0		0.5		0.5		0.5	"
	"	12	"	"	"	"	"	"	"	"	"	"	"		12 mA							"					O_1		"		"		"	"
	"	13	"	"	"	"	"	"	"	"	"	"	"			12 mA						"					O_2		"		"		"	"
	"	14	"	"	"	"	"	"	"	"	"	"	"				12 mA						"					O_3		"		"		"	"
	"	15	"	"	"	"	"	"	"	"	"	"	"					12 mA					"					O_4		"		"		"	"
	"	16	"	"	"	"	"	"	"	"	"	"	"						12 mA				"					O_5		"		"		"	"
	"	17	"	"	"	"	"	"	"	"	"	"	"							12 mA			"					O_6		"		"		"	"
	"	18	"	"	"	"	"	"	"	"	"	"	"								12 mA		"					O_7		"		"		"	"
V_{OH}	3006	19	"	"	"	"	"	"	"	"	"	"	"	-2 mA								"					O_0	2.4		2.4		2.4		"
	"	20	"	"	"	"	"	"	"	"	"	"	"		-2 mA							"					O_1	"		"		"		"
	"	21	"	"	"	"	"	"	"	"	"	"	"			-2 mA							"					O_2	"		"		"		"
	"	22	"	"	"	"	"	"	"	"	"	"	"				-2 mA						"					O_3	"		"		"		"
	"	23	"	"	"	"	"	"	"	"	"	"	"					-2 mA					"					O_4	"		"		"		"
	"	24	"	"	"	"	"	"	"	"	"	"	"						-2 mA				"					O_5	"		"		"		"
	"	25	"	"	"	"	"	"	"	"	"	"	"							-2 mA			"					O_6	"		"		"		"
	"	26	"	"	"	"	"	"	"	"	"	"	"								-2 mA		"					O_7	"		"		"		"
I_{IL}	3009	27	0.4 V									"										5.5					CLOCK		-0.25		-0.25		-0.25	mA
	"	28		0.4 V								"										"					I_0		"		"		"	"
	"	29			0.4 V							"										"					I_1		"		"		"	"
	"	30				0.4 V						"										"					I_2		"		"		"	"
	"	31					0.4 V					"										"					I_3		"		"		"	"
	"	32						0.4 V				"										"					I_4		"		"		"	"
	"	33							0.4 V			"										"					I_5		"		"		"	"
	"	34								0.4 V		"										"					I_6		"		"		"	"
	"	35									0.4 V	"										"					I_7		"		"		"	"
	"	36										"	0.4 V									"					OE		"		"		"	"
I_{IH}	3010	37	2.4 V									"										"					CLOCK		25		25		25	μA
	"	38		2.4 V								"										"					I_0		"		"		"	"
	"	39			2.4 V							"										"					I_1		"		"		"	"
	"	40				2.4 V						"										"					I_2		"		"		"	"
	"	41					2.4 V					"										"					I_3		"		"		"	"
	"	42						2.4 V				"										"					I_4		"		"		"	"
	"	43							2.4 V			"										"					I_5		"		"		"	"
	"	44								2.4 V		"										"					I_6		"		"		"	"
	"	45									2.4 V	"										"					I_7		"		"		"	"
	"	46										"	2.4 V									"					OE		"		"		"	"

See footnotes at end of table.

TABLE III. Group A inspection for device type 08 - Continued.
Terminal conditions (pins not designated may be high ≥2.0 V, low ≤0.8 V, or open).

Symbol	MIL-STD-883 method	Case R,Y,Z	1	2	3	4	5	6	7	8	9	10	11	12	13	14	15	16	17	18	19	20	21	22	23	24	Measured terminal	Test limits Subgroup 1 T_C = 25°C Min	Subgroup 1 Max	Subgroup 2 T_C = 125°C Min	Subgroup 2 Max	Subgroup 3 T_C = -55°C Min	Subgroup 3 Max	Unit
		Test no.	CLC	I_0	I_1	I_2	I_3	I_4	I_5	I_6	I_7	GND	OE	O_0	O_1	O_2	O_3	O_4	O_5	O_6	O_7	V_{CC}												
I_I		47	5.5 V									GND										5.5 V					CLOCK		1.0		1.0		1.0	mA
		48		5.5 V								"										"					I_0		"		"		"	"
		49			5.5 V							"										"					I_1		"		"		"	"
		50				5.5 V						"										"					I_2		"		"		"	"
		51					5.5 V					"										"					I_3		"		"		"	"
		52						5.5 V				"										"					I_4		"		"		"	"
		53							5.5 V			"										"					I_5		"		"		"	"
		54								5.5 V		"										"					I_6		"		"		"	"
		55									5.5 V	"										"					I_7		"		"		"	"
		56										"	5.5 V									"					OE		"		"		"	"
I_{OS}	3011	57	1/	1/	1/	1/	1/	1/	1/	1/	1/	"	6/	GND	GND	GND	GND					5.0 V					O_0	-30	-250	-30	-250	-30	-250	"
	"	58	"	"	"	"	"	"	"	"	"	"	"					GND				"					O_1	"	"	"	"	"	"	"
	"	59	"	"	"	"	"	"	"	"	"	"	"						GND			"					O_2	"	"	"	"	"	"	"
	"	60	"	"	"	"	"	"	"	"	"	"	"							GND		"					O_3	"	"	"	"	"	"	"
	"	61	"	"	"	"	"	"	"	"	"	"	"								GND	"					O_4	"	"	"	"	"	"	"
	"	62	"	"	"	"	"	"	"	"	"	"	"									"					O_5	"	"	"	"	"	"	"
	"	63	"	"	"	"	"	"	"	"	"	"	"									"					O_6	"	"	"	"	"	"	"
	"	64	"	"	"	"	"	"	"	"	"	"	"									"					O_7	"	"	"	"	"	"	"
I_{OZH}		65	"	"	"	"	"	"	"	"	"	"	7/	2.4 V	2.4 V	2.4 V	2.4 V					5.5 V					O_0		100		100		100	μA
		66	"	"	"	"	"	"	"	"	"	"	"					2.4 V				"					O_1		"		"		"	"
		67	"	"	"	"	"	"	"	"	"	"	"						2.4 V				"					O_2		"		"		"	"
		68	"	"	"	"	"	"	"	"	"	"	"							2.4 V			"					O_3		"		"		"	"
		69	"	"	"	"	"	"	"	"	"	"	"								2.4 V		"					O_4		"		"		"	"
		70	"	"	"	"	"	"	"	"	"	"	"									2.4 V	"					O_5		"		"		"	"
		71	"	"	"	"	"	"	"	"	"	"	"										"					O_6		"		"		"	"
		72	"	"	"	"	"	"	"	"	"	"	"										"					O_7		"		"		"	"
I_{OZL}		73	"	"	"	"	"	"	"	"	"	"	"	0.4 V	0.4 V	0.4 V	0.4 V						"					O_0		-100		-100		-100	"
		74	"	"	"	"	"	"	"	"	"	"	"					0.4 V					"					O_1		"		"		"	"
		75	"	"	"	"	"	"	"	"	"	"	"						0.4 V				"					O_2		"		"		"	"
		76	"	"	"	"	"	"	"	"	"	"	"							0.4 V			"					O_3		"		"		"	"
		77	"	"	"	"	"	"	"	"	"	"	"								0.4 V		"					O_4		"		"		"	"
		78	"	"	"	"	"	"	"	"	"	"	"									0.4 V	"					O_5		"		"		"	"
		79	"	"	"	"	"	"	"	"	"	"	"										"					O_6		"		"		"	"
		80	"	"	"	"	"	"	"	"	"	"	"									0.4 V	"					O_7		"		"		"	"
I_{CC}	3005	81										"										"					V_{CC}		90		90		90	mA
																												Subgroup 7 T_C = 25°C Min	Subgroup 7 Max	Subgroup 8 T_C = 125°C Min	Subgroup 8 Max	Subgroup 8 T_C = -55°C Min	Subgroup 8 Max	
Functional tests	3014	82	2/	2/	2/	2/	2/	2/	2/	2/	2/	GND	2/	2/	2/	2/	2/	2/	2/	2/	2/	4.5 V					All outputs		2/		2/		2/	

See footnotes at end of table.

TABLE III. Group A inspection for device type 08 - Continued.
Terminal conditions (pins not designated may be high ≥2.0 V, low ≤0.8 V, or open).

Symbol	MIL-STD-883 method	Case R,Y,Z	1	2	3	4	5	6	7	8	9	10	11	12	13	14	15	16	17	18	19	20	21	22	23	24	Measured terminal	Test limits						Unit
																												Subgroup 9 T_C = 25°C		Subgroup 10 T_C = 25°C		Subgroup 11 T_C = -55°C		
		Test no.	CLK	I_0	I_1	I_2	I_3	I_4	I_5	I_6	I_7	GND	OE	O_0	O_1	O_2	O_3	O_4	O_5	O_6	O_7	V_{CC}						Min	Max	Min	Max	Min	Max	
t_{SU}	3003 Fig. 5	83	3/	3/	3/	3/	3/	3/	3/	3/	3/	GND	6/	4/ 8/	4/ 8/	4/ 8/	4/ 8/	4/ 8/	4/ 8/	4/ 8/	4/ 8/	3/					All outputs	10/	50	10/	50	10/	50	ns
$t_P(CL)$	"	84	"	"	"	"	"	"	"	"	"	"	"	"	"	"	"	"	"	"	"	"					"	10/	25	10/	25	10/	25	"
t_{PCH}	"	85	"	"	"	"	"	"	"	"	"	"	"	"	"	"	"	"	"	"	"	"					"		"		"		"	"
t_{PCL}	"	86	"	"	"	"	"	"	"	"	"	"	"	"	"	"	"	"	"	"	"	"					"		"		"		"	"
t_{PZH}	"	87	"	"	"	"	"	"	"	"	"	"	"	"	"	"	"	"	"	"	"	"					"		"		"		"	"
t_{PZL}	"	88	"	"	"	"	"	"	"	"	"	"	"	"	"	"	"	"	"	"	"	"					"		"		"		"	"
t_{PLZ}	"	89	"	"	"	"	"	"	"	"	"	"	"	"	"	"	"	"	"	"	"	"					"		"		"		"	"
t_{PHZ}	"	90	"	"	"	"	"	"	"	"	"	"	"	"	"	"	"	"	"	"	"	"					"		"		"		"	"
f_{MAX}	"	91	5/	5/	5/	5/	5/	5/	5/	5/	5/	"	"	5/	5/	5/	5/	5/	5/	5/	5/	4.5 V					"	14		14		14		MHz

See footnotes at end of table.

TABLE III. Group A inspection for device type 09.
Terminal conditions (pins not designated may be high ≥2.0 V, low ≤0.8 V, or open).

Symbol	MIL-STD-883 method	Case R,Y,Z	1	2	3	4	5	6	7	8	9	10	11	12	13	14	15	16	17	18	19	20	21	22	23	24	Measured terminal	Test limits Subgroup 1 T_C = 25°C Min	Subgroup 1 Max	Subgroup 2 T_C = 125°C Min	Subgroup 2 Max	Subgroup 3 T_C = -55°C Min	Subgroup 3 Max	Unit
		Test no.	CLK	I_0	I_1	I_2	I_3	I_4	I_5	I_6	I_7	GND	OE	I/O_0	O_1	O_2	O_3	O_4	O_5	O_6	I/O_7	V_{CC}												
V_{IC}		1	-18 mA									GND										4.5 V					CLOCK		-1.5		-1.5		-1.5	V
		2		-18 mA								"										"					I_0		"		"		"	"
		3			-18 mA							"										"					I_1		"		"		"	"
		4				-18 mA						"										"					I_2		"		"		"	"
		5					-18 mA					"										"					I_3		"		"		"	"
		6						-18 mA				"										"					I_4		"		"		"	"
		7							-18 mA			"										"					I_5		"		"		"	"
		8								-18 mA		"										"					I_6		"		"		"	"
		9									-18 mA	"										"					I_7		"		"		"	"
		10										"	-18 mA									"					OE		"		"		"	"
		11										"		-18 mA								"					I/O_0		"		"		"	"
		12										"									-18 mA	"					I/O_7		"		"		"	"
V_{OL}	3007	13	1/	1/	1/	1/	1/	1/	1/	1/	1/	"	6/	12 mA								"					I/O_0		0.5		0.5		0.5	"
	"	14	"	"	"	"	"	"	"	"	"	"	"		12 mA							"					I_1		"		"		"	"
	"	15	"	"	"	"	"	"	"	"	"	"	"			12 mA						"					I_2		"		"		"	"
	"	16	"	"	"	"	"	"	"	"	"	"	"				12 mA						"					I_3		"		"		"	"
	"	17	"	"	"	"	"	"	"	"	"	"	"					12 mA					"					I_4		"		"		"	"
	"	18	"	"	"	"	"	"	"	"	"	"	"						12 mA				"					I_5		"		"		"	"
	"	19	"	"	"	"	"	"	"	"	"	"	"							12 mA			"					I_6		"		"		"	"
	"	20	"	"	"	"	"	"	"	"	"	"	"								12 mA		"					I/O_7		"		"		"	"
V_{OH}	3006	21	"	"	"	"	"	"	"	"	"	"	"	-2 mA								"					I/O_0	2.4		2.4		2.4		"
	"	22	"	"	"	"	"	"	"	"	"	"	"		-2 mA							"					I_1	"		"		"		"
	"	23	"	"	"	"	"	"	"	"	"	"	"			-2 mA							"					I_2	"		"		"		"
	"	24	"	"	"	"	"	"	"	"	"	"	"				-2 mA						"					I_3	"		"		"		"
	"	25	"	"	"	"	"	"	"	"	"	"	"					-2 mA					"					I_4	"		"		"		"
	"	26	"	"	"	"	"	"	"	"	"	"	"						-2 mA				"					I_5	"		"		"		"
	"	27	"	"	"	"	"	"	"	"	"	"	"							-2 mA			"					I_6	"		"		"		"
	"	28	"	"	"	"	"	"	"	"	"	"	"								-2 mA		"					I/O_7	"		"		"		"
I_{IL}	3009	29	0.4 V									"										15.5 V					CLOCK		-0.25		-0.25		-0.25	mA
	"	30		0.4 V								"										"					I_0		"		"		"	"
	"	31			0.4 V							"										"					I_1		"		"		"	"
	"	32				0.4 V						"										"					I_2		"		"		"	"
	"	33					0.4 V					"										"					I_3		"		"		"	"
	"	34						0.4 V				"										"					I_4		"		"		"	"
	"	35							0.4 V			"										"					I_5		"		"		"	"
	"	36								0.4 V		"										"					I_6		"		"		"	"
	"	37									0.4 V	"										"					I_7		"		"		"	"
	"	38										"	0.4 V									"					OE		"		"		"	"
	"	39										"		0.4 V								"					I/O_0		"		"		"	"
	"	40										"									0.4 V	"					I/O_1		"		"		"	"
I_{IH}	3010	41	2.4 V									"										"					CLOCK		25		25		25	"
	"	42		2.4 V								"										"					I_0		"		"		"	"
	"	43			2.4 V							"										"					I_1		"		"		"	"
	"	44				2.4 V						"										"					I_2		"		"		"	"
	"	45					2.4 V					"										"					I_3		"		"		"	"
	"	46						2.4 V				"										"					I_4		"		"		"	"
	"	47							2.4 V			"										"					I_5		"		"		"	"
	"	48								2.4 V		"										"					I_6		"		"		"	"
	"	49									2.4 V	"										"					I_7		"		"		"	"
	"	50										"	2.4 V									"					OE		"		"		"	"

See footnotes at end of table.

TABLE III. Group A inspection for device type 09 - Continued.
Terminal conditions (pins not designated may be high ≥2.0 V, low ≤0.8 V, or open).

Symbol	MIL-STD-883 method	Case R,Y,Z	1	2	3	4	5	6	7	8	9	10	11	12	13	14	15	16	17	18	19	20	21	22	23	24	Measured terminal	Test limits Subgroup 1 T_C = 25°C Min	Subgroup 1 Max	Subgroup 2 T_C = 125°C Min	Subgroup 2 Max	Subgroup 3 T_C = -55°C Min	Subgroup 3 Max	Unit
		Test no.	CLK	I_0	I_1	I_2	I_3	I_4	I_5	I_6	I_7	GND	OE	I/O_0	O_1	O_2	O_3	O_4	O_5	O_6	I/O_7	V_{CC}												
I_I		51	5.5 V									GND										5.5 V					CLOCK		1.0		1.0		1.0	mA
		52		5.5 V								"										"					I_0		"		"		"	"
		53			5.5 V							"										"					I_1		"		"		"	"
		54				5.5 V						"										"					I_2		"		"		"	"
		55					5.5 V					"										"					I_3		"		"		"	"
		56						5.5 V				"										"					I_4		"		"		"	"
		57							5.5 V			"										"					I_5		"		"		"	"
		58								5.5 V		"										"					I_6		"		"		"	"
		59									5.5 V	"										"					I_7		"		"		"	"
		60										"	5.5 V									"					OE		"		"		"	"
		61										"		5.5 V								"					I/O_0		"		"		"	"
		62										"									5.5 V	"					I/O_7		"		"		"	"
I_{OS}	3011	63	1/	1/	1/	1/	1/	1/	1/	1/	1/	"	6/	GND								5.0 V					I/O_0	-30	-250	-30	-250	-30	-250	"
"	"	64	"	"	"	"	"	"	"	"	"	"	"	"	GND							"					O_1	"	"	"	"	"	"	"
"	"	65	"	"	"	"	"	"	"	"	"	"	"			GND	GND					"					O_2	"	"	"	"	"	"	"
"	"	66	"	"	"	"	"	"	"	"	"	"	"					GND				"					O_3	"	"	"	"	"	"	"
"	"	67	"	"	"	"	"	"	"	"	"	"	"						GND			"					O_4	"	"	"	"	"	"	"
"	"	68	"	"	"	"	"	"	"	"	"	"	"							GND		"					O_5	"	"	"	"	"	"	"
"	"	69	"	"	"	"	"	"	"	"	"	"	"								GND	"					O_6	"	"	"	"	"	"	"
"	"	70	"	"	"	"	"	"	"	"	"	"	"									"					I/O_7	"	"	"	"	"	"	"
I_{OZH}		71	"	"	"	"	"	"	"	"	"	"	7/	2.4 V								5.5 V					I/O_0		100		100		100	μA
		72	"	"	"	"	"	"	"	"	"	"	"		2.4 V							"					O_1		"		"		"	"
		73	"	"	"	"	"	"	"	"	"	"	"			2.4 V						"					O_2		"		"		"	"
		74	"	"	"	"	"	"	"	"	"	"	"				2.4 V					"					O_3		"		"		"	"
		75	"	"	"	"	"	"	"	"	"	"	"					2.4 V				"					O_4		"		"		"	"
		76	"	"	"	"	"	"	"	"	"	"	"						2.4 V			"					O_5		"		"		"	"
		77	"	"	"	"	"	"	"	"	"	"	"							2.4 V		"					O_6		"		"		"	"
		78	"	"	"	"	"	"	"	"	"	"	"								2.4 V	"					I/O_7		"		"		"	"
I_{OZL}		79	"	"	"	"	"	"	"	"	"	"	"		0.4 V							"					O_1		-100		-100		-100	"
		80	"	"	"	"	"	"	"	"	"	"	"			0.4 V						"					O_2		"		"		"	"
		81	"	"	"	"	"	"	"	"	"	"	"				0.4 V					"					O_3		"		"		"	"
		82	"	"	"	"	"	"	"	"	"	"	"					0.4 V				"					O_4		"		"		"	"
		83	"	"	"	"	"	"	"	"	"	"	"						0.4 V			"					O_5		"		"		"	"
		84	"	"	"	"	"	"	"	"	"	"	"							0.4 V		"					O_6		"		"		"	"
I_{CC}	3005	85										"										"					V_{CC}		90		90		90	mA
																												Subgroup 7 T_C = 25°C Min	Max	Subgroup 8 T_C = 125°C Min	Max	Subgroup 8 T_C = -55°C Min	Max	
Functional tests	3014	86	2/	2/	2/	2/	2/	2/	2/	2/	2/	GND	2/	2/	2/	2/	2/	2/	2/	2/	2/	4.5 V					All outputs		2/		2/		2/	

See footnotes at end of table.

TABLE III. Group A inspection for device type 09 - Continued.
Terminal conditions (pins not designated may be high ≥2.0 V, low ≤0.8 V, or open).

Symbol	MIL-STD-883 method	Case R,Y,Z	1	2	3	4	5	6	7	8	9	10	11	12	13	14	15	16	17	18	19	20	21	22	23	24	Measured terminal	Test limits Subgroup 9 T_C = 25°C Min	Subgroup 9 Max	Subgroup 10 T_C = 125°C Min	Subgroup 10 Max	Subgroup 11 T_C = -55°C Min	Subgroup 11 Max	Unit
		Test no.	CLK	I_0	I_1	I_2	I_3	I_4	I_5	I_6	I_7	GND	OE	I/O_0	O_1	O_2	O_3	O_4	O_5	O_6	I/O_7	V_{CC}												
t_{SU}	3003 Fig. 6	87	3/	3/	3/	3/	3/	3/	3/	3/	3/	GND	5/		4/ 8/	4/ 8/	4/ 8/	4/ 8/	4/ 8/	4/ 8/		3/					All outputs	10/	50	10/	50	10/	50	ns
$t_{P(CL)}$	"	88	"	"	"	"	"	"	"	"	"	"	"		"	"	"	"	"	"		"					"	10/	25	10/	25	10/	25	"
t_{RCL}	"	89	"	"	"	"	"	"	"	"	"	"	"		"	"	"	"	"	"		"					"		"		"		"	"
t_{RCH}	"	90	"	"	"	"	"	"	"	"	"	"	"		"	"	"	"	"	"		"					"		"		"		"	"
t_{PHL}	"	91	"	"	"	"	"	"	"	"	"	"		4/ 9/							4/ 9/	"					All I/OS		50		50		50	"
t_{PLH}	"	92	"	"	"	"	"	"	"	"	"	"		4/ 9/							4/ 9/	"					All I/OS		50		50		50	"
t_{PZH}	"	93	"	"	"	"	"	"	"	"	"	"	6/		4/ 8/	4/ 8/	4/ 8/	4/ 8/	4/ 8/	4/ 8/		"					All outputs		25		25		25	"
t_{PZL}	"	94	"	"	"	"	"	"	"	"	"	"	"		"	"	"	"	"	"		"					"		"		"		"	"
t_{PHZ}	"	95	"	"	"	"	"	"	"	"	"	"	"		"	"	"	"	"	"		"					"		"		"		"	"
t_{PLZ}	"	96	"	"	"	"	"	"	"	"	"	"	"		"	"	"	"	"	"		"					"		"		"		"	"
t_{PZH}	"	97	"	"	"	"	"	"	"	"	"	"		4/ 9/							4/ 9/	"					All I/OS		45		45		45	"
t_{PZL}	"	98	"	"	"	"	"	"	"	"	"	"		"							"						"		"		"		"	"
t_{PHZ}	"	99	"	"	"	"	"	"	"	"	"	"		"							"						"		"		"		"	"
t_{PLZ}	"	100	"	"	"	"	"	"	"	"	"	"		"							"						"		"		"		"	"
f_{MAX}	"	101	5/	5/	5/	5/	5/	5/	5/	5/	5/	"	6/		5/	5/	5/	5/	5/	5/		4.5 V					All	14		14		14		MHz

See footnotes at end of table.

TABLE III. Group A inspection for device type 10.
Terminal conditions (pins not designated may be high ≥2.0 V, low ≤0.8 V, or open).

Symbol	MIL-STD-883 method	Case R,Y,Z	1	2	3	4	5	6	7	8	9	10	11	12	13	14	15	16	17	18	19	20	21	22	23	24	Measured terminal	Test limits Subgroup 1 T_C = 25°C Min	Subgroup 1 Max	Subgroup 2 T_C = 125°C Min	Subgroup 2 Max	Subgroup 3 T_C = -55°C Min	Subgroup 3 Max	Unit
		Test no.	CLK	I_0	I_1	I_2	I_3	I_4	I_5	I_6	I_7	GND	OE	I/O_0	I/O_1	O_2	O_3	O_4	O_5	I/O_6	I/O_7	V_{CC}												
V_{IC}		1	-18 mA									GND										4.5 V					CLOCK		-1.5		-1.5		-1.5	V
		2		-18 mA								"										"					I_0		"		"		"	"
		3			-18 mA							"										"					I_1		"		"		"	"
		4				-18 mA						"										"					I_2		"		"		"	"
		5					-18 mA					"										"					I_3		"		"		"	"
		6						-18 mA				"										"					I_4		"		"		"	"
		7							-18 mA			"										"					I_5		"		"		"	"
		8								-18 mA		"										"					I_6		"		"		"	"
		9									-18 mA	"										"					I_7		"		"		"	"
		10										"	-18 mA									"					OE		"		"		"	"
		11										"		-18 mA								"					I/O_0		"		"		"	"
		12										"			-18 mA							"					I/O_1		"		"		"	"
		13										"								-18 mA		"					I/O_6		"		"		"	"
		14										"									-18 mA	"					I/O_7		"		"		"	"
I_{OL}	3007	15	1/	1/	1/	1/	1/	1/	1/	1/	1/	GND	6/	12 mA								"					I/O_0		0.5		0.5		0.5	"
	"	16	"	"	"	"	"	"	"	"	"	"	"		12 mA							"					I/O_1		"		"		"	"
	"	17	"	"	"	"	"	"	"	"	"	"	"			12 mA						"					I_2		"		"		"	"
	"	18	"	"	"	"	"	"	"	"	"	"	"				12 mA						"					I_3		"		"		"	"
	"	19	"	"	"	"	"	"	"	"	"	"	"					12 mA					"					I_4		"		"		"	"
	"	20	"	"	"	"	"	"	"	"	"	"	"						12 mA				"					I_5		"		"		"	"
	"	21	"	"	"	"	"	"	"	"	"	"	"							12 mA		"						I/O_6		"		"		"	"
	"	22	"	"	"	"	"	"	"	"	"	"	"								12 mA	"						I/O_7		"		"		"	"
I_{OH}	3006	23	"	"	"	"	"	"	"	"	"	"	"	-2 mA								"					I/O_0	2.4		2.4		2.4		"
	"	24	"	"	"	"	"	"	"	"	"	"	"		-2 mA							"					I/O_1	"		"		"		"
	"	25	"	"	"	"	"	"	"	"	"	"	"			-2 mA							"					O_2	"		"		"		"
	"	26	"	"	"	"	"	"	"	"	"	"	"				-2 mA						"					O_3	"		"		"		"
	"	27	"	"	"	"	"	"	"	"	"	"	"					-2 mA					"					O_4	"		"		"		"
	"	28	"	"	"	"	"	"	"	"	"	"	"						-2 mA				"					O_5	"		"		"		"
	"	29	"	"	"	"	"	"	"	"	"	"	"							-2 mA			"					I/O_6	"		"		"		"
	"	30	"	"	"	"	"	"	"	"	"	"	"								-2 mA		"					I/O_7	"		"		"		"
I_{IL}	3009	31	0.4 V									"										5.5 V					CLOCK		-0.25		-0.25		-0.25	mA
	"	32		0.4 V								"										"					I_0		"		"		"	"
	"	33			0.4 V							"										"					I_1		"		"		"	"
	"	34				0.4 V						"										"					I_2		"		"		"	"
	"	35					0.4 V					"										"					I_3		"		"		"	"
	"	36						0.4 V				"										"					I_4		"		"		"	"
	"	37							0.4 V			"										"					I_5		"		"		"	"
	"	38								0.4 V		"										"					I_6		"		"		"	"
	"	39									0.4 V	"										"					I_7		"		"		"	"
	"	40										"	0.4 V									"					OE		"		"		"	"
	"	41										"		0.4 V								"					I/O_0		"		"		"	"
	"	42										"			0.4 V							"					I/O_1		"		"		"	"
	"	43										"								0.4 V		"					I/O_6		"		"		"	"
	"	44										"									0.4 V	"					I/O_7		"		"		"	"

See footnotes at end of table.

TABLE III. Group A inspection for device type 10 - Continued.
Terminal conditions (pins not designated may be high ≥2.0 V, low ≤0.8 V, or open).

Symbol	MIL-STD-883 method	Case R,Y,Z	1	2	3	4	5	6	7	8	9	10	11	12	13	14	15	16	17	18	19	20	21	22	23	24	Measured terminal	Test limits Subgroup 1 T_C = 25°C Min	Subgroup 1 Max	Subgroup 2 T_C = 125°C Min	Subgroup 2 Max	Subgroup 3 T_C = -55°C Min	Subgroup 3 Max	Unit
		Test no.	CLK	I_0	I_1	I_2	I_3	I_4	I_5	I_6	I_7	GND	OE	I/O_0	I/O_1	O_2	O_3	O_4	O_5	I/O_6	I/O_7	V_{CC}												
I_{IH}	3010	45	2.4 V									GND										5.5 V					CLOCK		25		25		25	µA
	"	46		2.4 V								"										"					I_0		"		"		"	"
	"	47			2.4 V							"										"					I_1		"		"		"	"
	"	48				2.4 V						"										"					I_2		"		"		"	"
	"	49					2.4 V					"										"					I_3		"		"		"	"
	"	50						2.4 V				"										"					I_4		"		"		"	"
	"	51							2.4 V			"										"					I_5		"		"		"	"
	"	52								2.4 V		"										"					I_6		"		"		"	"
	"	53									2.4 V	"										"					I_7		"		"		"	"
	"	54										"	2.4 V									"					OE		"		"		"	"
I_I		55	5.5 V									"										"					CLOCK		1.0		1.0		1.0	mA
		56		5.5 V								"										"					I_0		"		"		"	"
		57			5.5 V							"										"					I_1		"		"		"	"
		58				5.5 V						"										"					I_2		"		"		"	"
		59					5.5 V					"										"					I_3		"		"		"	"
		60						5.5 V				"										"					I_4		"		"		"	"
		61							5.5 V			"										"					I_5		"		"		"	"
		62								5.5 V		"										"					I_6		"		"		"	"
		63									5.5 V	"										"					I_7		"		"		"	"
		64										"	5.5 V									"					OE		"		"		"	"
		65										"		5.5 V								"					I/O_0		"		"		"	"
		66										"			5.5 V							"					I/O_1		"		"		"	"
		67										"								5.5 V		"					I/O_2		"		"		"	"
		68										"									5.5 V	"					I/O_3		"		"		"	"
I_{OS}	3011	69	1/	1/	1/	1/	1/	1/	1/	1/	1/	"	6/	GND	GND	GND	GND	GND	GND	GND	GND	"					I/O_0	-30	-250	-30	-250	-30	-250	"
	"	70	"	"	"	"	"	"	"	"	"	"	"									"					I/O_1	"	"	"	"	"	"	"
	"	71	"	"	"	"	"	"	"	"	"	"	"									"					O_2	"	"	"	"	"	"	"
	"	72	"	"	"	"	"	"	"	"	"	"	"									"					O_3	"	"	"	"	"	"	"
	"	73	"	"	"	"	"	"	"	"	"	"	"									"					O_4	"	"	"	"	"	"	"
	"	74	"	"	"	"	"	"	"	"	"	"	"									"					O_5	"	"	"	"	"	"	"
	"	75	"	"	"	"	"	"	"	"	"	"	"									"					I/O_6	"	"	"	"	"	"	"
	"	76	"	"	"	"	"	"	"	"	"	"	"									"					I/O_7	"	"	"	"	"	"	"
I_{OZH}		77	"	"	"	"	"	"	"	"	"	"	7/	2.4 V								"					I/O_0		100		100		100	µA
		78	"	"	"	"	"	"	"	"	"	"	"		2.4 V								"					I/O_1		"		"		"	"
		79	"	"	"	"	"	"	"	"	"	"	"			2.4 V							"					O_2		"		"		"	"
		80	"	"	"	"	"	"	"	"	"	"	"				2.4 V						"					O_3		"		"		"	"
		81	"	"	"	"	"	"	"	"	"	"	"					2.4 V					"					O_4		"		"		"	"
		82	"	"	"	"	"	"	"	"	"	"	"						2.4 V				"					O_5		"		"		"	"
		83	"	"	"	"	"	"	"	"	"	"	"							2.4 V			"					I/O_6		"		"		"	"
		84	"	"	"	"	"	"	"	"	"	"	"								2.4 V		"					I/O_7		"		"		"	"
I_{OZL}		85	"	"	"	"	"	"	"	"	"	"	"			0.4 V						"					O_2		-100		-100		-100	"
		86	"	"	"	"	"	"	"	"	"	"	"				0.4 V						"					O_3		"		"		"	"
		87	"	"	"	"	"	"	"	"	"	"	"					0.4 V					"					O_4		"		"		"	"
		88	"	"	"	"	"	"	"	"	"	"	"						0.4 V				"					O_5		"		"		"	"
I_{CC}	3005	89										"										"					V_{CC}		90		90		90	mA

See footnotes at end of table.

TABLE III. Group A inspection for device type 10 - Continued.
Terminal conditions (pins not designated may be high ≥2.0 V, low ≤0.8 V, or open).

Symbol	MIL-STD-883 method	Case R,Y,Z	1	2	3	4	5	6	7	8	9	10	11	12	13	14	15	16	17	18	19	20	21	22	23	24	Measured terminal	Test limits						Unit
		Test no.	CLK	I_0	I_1	I_2	I_3	I_4	I_5	I_6	I_7	GND	OE	I/O_0	I/O_1	O_2	O_3	O_4	O_5	I/O_6	I/O_7	V_{CC}						Subgroup 7 T_C = 25°C		Subgroup 8 T_C = 125°C		Subgroup 8 T_C = -55°C		
																												Min	Max	Min	Max	Min	Max	
Functional tests	3014	90	2/	2/	2/	2/	2/	2/	2/	2/	2/	GND	2/	2/	2/	2/	2/	2/	2/	2/	2/	4.5 V					All outputs		2/		2/		2/	
																												Subgroup 9 T_C = 25°C		Subgroup 10 T_C = 125°C		Subgroup 11 T_C = -55°C		
																												Min	Max	Min	Max	Min	Max	
t_{SU}	3003 Fig. 6	91	3/	3/	3/	3/	3/	3/	3/	3/	3/	GND	6/			4/ 8/	4/ 8/	4/ 8/	4/ 8/			3/					All outputs	10/	50	10/	50	10/	50	ns
$t_{P(CL)}$	"	92	"	"	"	"	"	"	"	"	"	"	"			"	"	"	"			"					"	10/	25	10/	25	10/	25	"
t_{PCH}	"	93	"	"	"	"	"	"	"	"	"	"	"			"	"	"	"			"					"		"		"		"	"
t_{PCL}	"	94	"	"	"	"	"	"	"	"	"	"	"			"	"	"	"			"					"		"		"		"	"
t_{PHL}	"	95	"	"	"	"	"	"	"	"	"	"		4/ 9/	4/ 9/					4/ 9/	4/ 9/	"					All I/OS		50		50		50	"
t_{PLH}	"	96	"	"	"	"	"	"	"	"	"	"		4/ 9/	4/ 9/					4/ 9/	4/ 9/	"					All I/OS		50		50		50	"
t_{PZH}	"	97	"	"	"	"	"	"	"	"	"	"	6/			4/ 8/	4/ 8/	4/ 8/	4/ 8/			"					All outputs		25		25		25	"
t_{PZL}	"	98	"	"	"	"	"	"	"	"	"	"	"			"	"	"	"			"					"		"		"		"	"
t_{PHZ}	"	99	"	"	"	"	"	"	"	"	"	"	"			"	"	"	"			"					"		"		"		"	"
t_{PLZ}	"	100	"	"	"	"	"	"	"	"	"	"	"			"	"	"	"			"					"		"		"		"	"
t_{PZH}	"	101	"	"	"	"	"	"	"	"	"	"		4/ 9/	4/ 9/					4/ 9/	4/ 9/	"					All I/OS		45		45		45	"
t_{PZL}	"	102	"	"	"	"	"	"	"	"	"	"		4/ 9/	4/ 9/					4/ 9/	4/ 9/	"					"		"		"		"	"
t_{PLZ}	"	103	"	"	"	"	"	"	"	"	"	"										"					"		"		"		"	"
t_{PHZ}	"	104	"	"	"	"	"	"	"	"	"	"										"					"		"		"		"	"
f_{MAX}	"	105	5/	5/	5/	5/	5/	5/	5/	5/	5/	"	6/			5/	5/	5/	5/			5/					All	14		14		14		MHz

See footnotes at end of table.

1/ For programmed devices, select an appropriate set of inputs to acquire the desired output states.

For unprogrammed devices, for V_{OL}, V_{OH}, and I_{OS}, use conditions defined for the programming procedure as follows:

V_{OL}: a) 11.5 V on pins 1 - 9, 5 V on pins 12 - 15, and a clock pulse on pin 11. Outputs are on pins 16 - 19.

b) 11.5 V on pins 2 - 9 and pin 11, 5 V on pins 16 - 19, and a clock pulse on pin 1. Outputs are on pins 12 - 15.

V_{OH}: a) 11.5 V on pins 1 and 3 - 9, 5 V on pin 2 and 12 - 15, and a clock pulse on pin 11. Outputs are on pins 16 - 19.

b) 11.5 V on pins 3 - 9 and pin 11, 5 V on pin 2 and pins 16 - 19, and a clock pulse on pin 1. Ouptuts are on pins 12 - 15.

I_{OS}: Applying the proper output test, generating the output condition as specified for V_{OL} and V_{OH}.

2/ The functional tests shall verify that no fuses are blown for unprogrammed devices, or that the altered item drawing pattern exists for programmed devices, V_{IH} = 3.0 V, V_{IL} = GND.

3/ The test shall check all inputs, gates, and outputs that have programmed. The test shall be performed V_{CC} = 4.5 V and 5.5 V.

4/ The outputs are loaded per figure 6.

5/ The maximum clock frequency (f_{MAX}) is considered met if the proper output state changes occur with the frequency set to the minimum limit given in table III, or $f_{MAX} = 1/(t_{SU} + t_{P(CL)})$.

6/ External output enable set (OE = GND).

7/ External output enable reset (OE = 3.0 V).

8/ Synchronous registered output, with external output enable (pin 11).

9/ Asynchronous output, with internal output enable.

10/ t_{SU} and $t_{P(CL)}$ may be tested concurrently with t_{PCL} and t_{PCH} by using values within the maximum test values of table III.

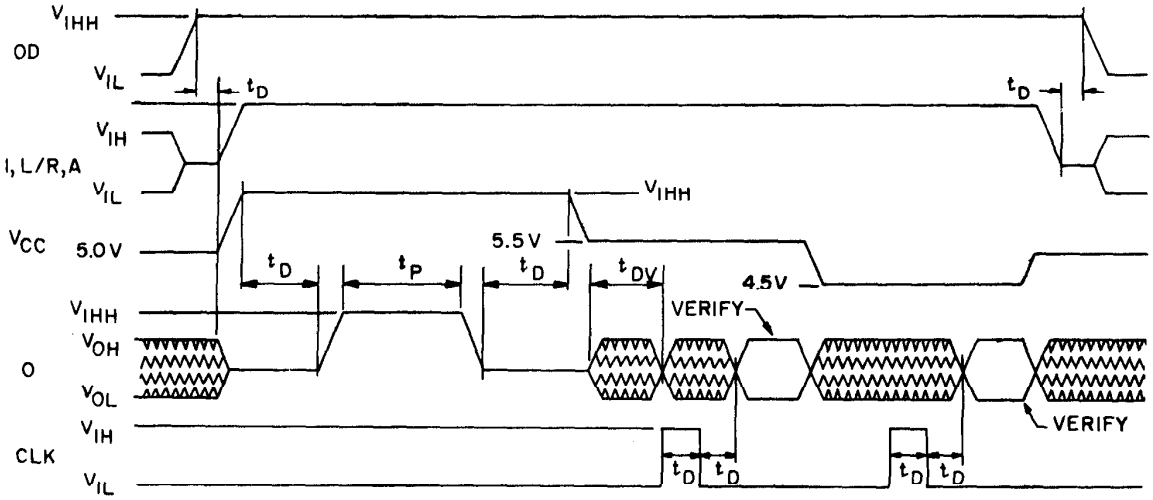

FIGURE 8a. Programming waveforms for circuit A.

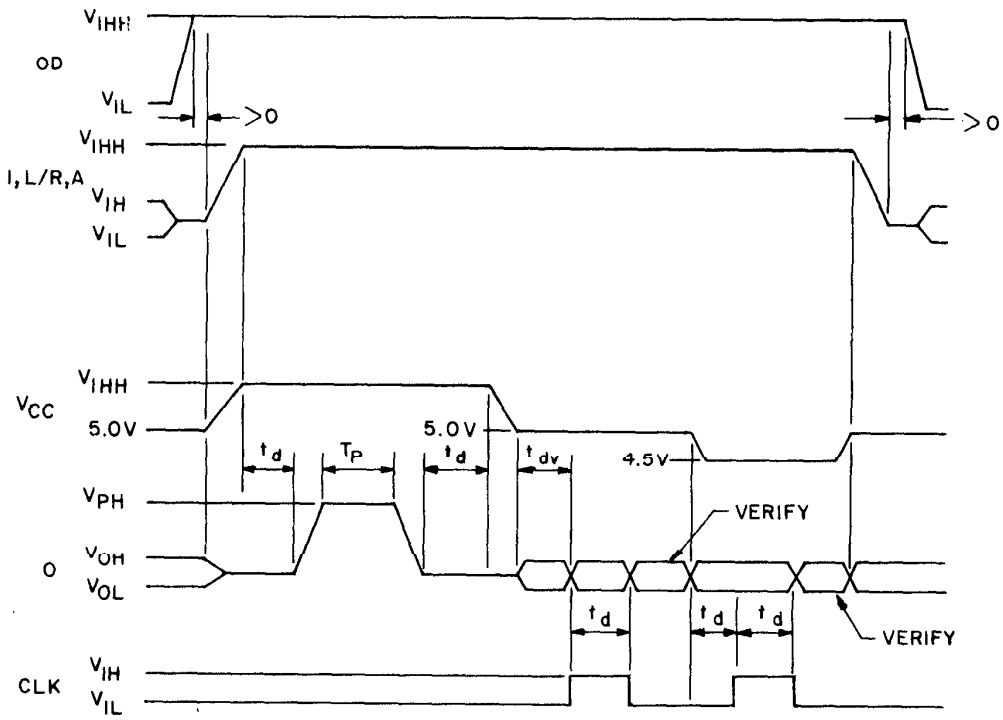

FIGURE 8b. Programming waveforms for circuit B.

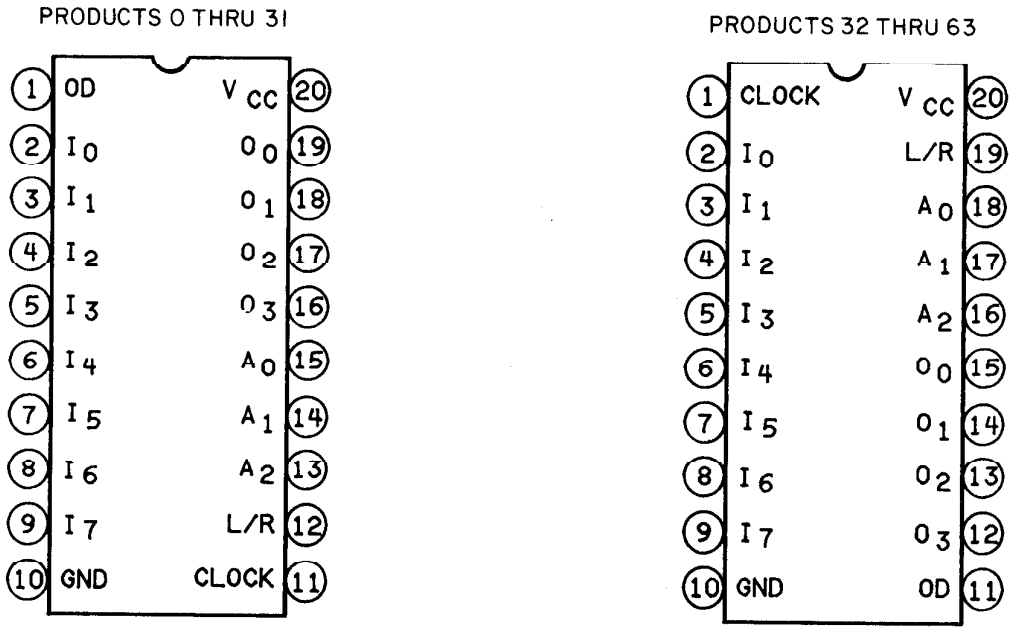

FIGURE 9. Programming pin identification for circuit A and circuit B.

TABLE IV. Programming characteristics for circuit A.

Symbol	Parameters		Limits Min	Limits Typ	Limits Max	Unit
V_{IHH}	Program - level input voltage		11.5	11.75	12.0	V
I_{IHH}	Program-level Input current	Output program pulse	---	---	50	mA
		Output disable, OD	---	---	50	
		All other inputs	---	---	10	
I_{CCH}	Program supply current		---	---	900	mA
T_p	Program pulse width		10	20	50	µs
t_d	Delay time		100	---	---	ns
---	Program pulse duty cycle		---	---	20	%
V_p	Program/verify-protect input voltage		18	18.5	19	V
I_p	Program/verify-protect input current		---	---	400	mA
T_{pp}	Security fuse programming pulse width		10	40	70	µs
	Security fuse programming duty cycle		---	---	50	%
t_{RP}	Rise time of output programming and address pulses		1	1.5	10	V/µs
t_{RP}	Rist time of security fuse programming pulses		1	1.5	10	V/µs
V_{CCPP}	V_{CC} value during security fuse programming		5.75	6.0	6.25	V
	V_{CC} value for first verify		4.75	5.0	5.25	
	V_{CC} value for high V_{CC} verify		5.4	5.5	5.6	
	V_{CC} value for low V_{CC} verify		4.4	4.5	4.6	

TABLE V. Input line select for circuit A.

Input line number	Pin identification								
	I_7	I_6	I_5	I_4	I_3	I_2	I_1	I_0	L/R
0	HH	HH	HH	HH	HH	HH	HH	L	L
1	HH	HH	HH	HH	HH	HH	HH	H	L
2	HH	HH	HH	HH	HH	HH	HH	L	HH
3	HH	HH	HH	HH	HH	HH	HH	H	HH
4	HH	HH	HH	HH	HH	HH	L	HH	L
5	HH	HH	HH	HH	HH	HH	H	HH	L
6	HH	HH	HH	HH	HH	HH	L	HH	HH
7	HH	HH	HH	HH	HH	HH	H	HH	HH
8	HH	HH	HH	HH	HH	L	HH	HH	L
9	HH	HH	HH	HH	HH	H	HH	HH	L
10	HH	HH	HH	HH	HH	L	HH	HH	HH
11	HH	HH	HH	HH	HH	H	HH	HH	HH
12	HH	HH	HH	HH	L	HH	HH	HH	L
13	HH	HH	HH	HH	H	HH	HH	HH	L
14	HH	HH	HH	HH	L	HH	HH	HH	HH
15	HH	HH	HH	HH	H	HH	HH	HH	HH
16	HH	HH	HH	L	HH	HH	HH	HH	L
17	HH	HH	HH	H	HH	HH	HH	HH	L
18	HH	HH	HH	L	HH	HH	HH	HH	HH
19	HH	HH	HH	H	HH	HH	HH	HH	HH
20	HH	HH	L	HH	HH	HH	HH	HH	L
21	HH	HH	H	HH	HH	HH	HH	HH	L
22	HH	HH	L	HH	HH	HH	HH	HH	HH
23	HH	HH	H	HH	HH	HH	HH	HH	HH
24	HH	L	HH	HH	HH	HH	HH	HH	L
25	HH	H	HH	HH	HH	HH	HH	HH	L
26	HH	L	HH	HH	HH	HH	HH	HH	HH
27	HH	H	HH	HH	HH	HH	HH	HH	HH
28	L	HH	HH	HH	HH	HH	HH	HH	L
29	H	HH	HH	HH	HH	HH	HH	HH	L
30	L	HH	HH	HH	HH	HH	HH	HH	HH
31	H	HH	HH	HH	HH	HH	HH	HH	HH

TABLE VI. Product line select for circuit A.

Product line number	Pin identification						
	O_3	O_2	O_1	O_0	A_2	A_1	A_0
0, 32	L	L	L	HH	L	L	L
1, 33	L	L	L	HH	L	L	HH
2, 34	L	L	L	HH	L	HH	L
3, 35	L	L	L	HH	L	HH	HH
4, 36	L	L	L	HH	HH	L	L
5, 37	L	L	L	HH	HH	L	HH
6, 38	L	L	L	HH	HH	HH	L
7, 39	L	L	L	HH	HH	HH	HH
8, 40	L	L	HH	L	L	L	L
9, 41	L	L	HH	L	L	L	HH
10, 42	L	L	HH	L	L	HH	L
11, 43	L	L	HH	L	L	HH	HH
12, 44	L	L	HH	L	HH	L	L
13, 45	L	L	HH	L	HH	L	HH
14, 46	L	L	HH	L	HH	HH	L
15, 47	L	L	HH	L	HH	HH	HH
16, 48	L	HH	L	L	L	L	L
17, 49	L	HH	L	L	L	L	HH
18, 50	L	HH	L	L	L	HH	L
19, 51	L	HH	L	L	L	HH	HH
20, 52	L	HH	L	L	HH	L	L
21, 53	L	HH	L	L	HH	L	HH
22, 54	L	HH	L	L	HH	HH	L
23, 55	L	HH	L	L	HH	HH	HH
24, 56	HH	L	L	L	L	L	L
25, 57	HH	L	L	L	L	L	HH
26, 58	HH	L	L	L	L	HH	L
27, 59	HH	L	L	L	L	HH	HH
28, 60	HH	L	L	L	HH	L	L
29, 61	HH	L	L	L	HH	L	HH
30, 62	HH	L	L	L	HH	HH	L
31, 63	HH	L	L	L	HH	HH	HH

TABLE VII. Programming characteristics for circuit B.

Symbol	Parameter		Limits			Units
			Min	Typ	Max	
V_{IHH}	Program-level input voltage		11.0	11.5	12.0	V
I_{IHH}	Program-level input current	Output program pulse			50	mA
		OD, L/R			25	
		All other inputs			5	
I_{CCH}	Program supply current				400	mA
T_p	Program pulse width		10		50	μs
t_d	Delay time		100			ns
	Program pulse duty cycle				25	%
V_p	Program/verify-protect-input voltage			20		V
I_p	Program/verify-protect-input current				400	mA
t_{dv}	Delay time to verify		100			μs
V_{PH}	Programming pulse		11.0	11.5	12.0	V

TABLE VIII. Input line select for circuit B.

Input line number	Pin identification								
	I_7	I_6	I_5	I_4	I_3	I_2	I_1	I_0	L/R
0	HH	HH	HH	HH	HH	HH	HH	L	Z
1	HH	HH	HH	HH	HH	HH	HH	H	Z
2	HH	HH	HH	HH	HH	HH	HH	L	HH
3	HH	HH	HH	HH	HH	HH	HH	H	HH
4	HH	HH	HH	HH	HH	HH	L	HH	Z
5	HH	HH	HH	HH	HH	HH	H	HH	Z
6	HH	HH	HH	HH	HH	HH	L	HH	HH
7	HH	HH	HH	HH	HH	HH	H	HH	HH
8	HH	HH	HH	HH	HH	L	HH	HH	Z
9	HH	HH	HH	HH	HH	H	HH	HH	Z
10	HH	HH	HH	HH	HH	L	HH	HH	HH
11	HH	HH	HH	HH	HH	H	HH	HH	HH
12	HH	HH	HH	HH	L	HH	HH	HH	Z
13	HH	HH	HH	HH	H	HH	HH	HH	Z
14	HH	HH	HH	HH	L	HH	HH	HH	HH
15	HH	HH	HH	HH	H	HH	HH	HH	HH
16	HH	HH	HH	L	HH	HH	HH	HH	Z
17	HH	HH	HH	H	HH	HH	HH	HH	Z
18	HH	HH	HH	L	HH	HH	HH	HH	HH
19	HH	HH	HH	H	HH	HH	HH	HH	HH
20	HH	HH	L	HH	HH	HH	HH	HH	Z
21	HH	HH	H	HH	HH	HH	HH	HH	Z
22	HH	HH	L	HH	HH	HH	HH	HH	HH
23	HH	HH	H	HH	HH	HH	HH	HH	HH
24	HH	L	HH	HH	HH	HH	HH	HH	Z
25	HH	H	HH	HH	HH	HH	HH	HH	Z
26	HH	L	HH	HH	HH	HH	HH	HH	HH
27	HH	H	HH	HH	HH	HH	HH	HH	HH
28	L	HH	HH	HH	HH	HH	HH	HH	Z
29	H	HH	HH	HH	HH	HH	HH	HH	Z
30	L	HH	HH	HH	HH	HH	HH	HH	HH
31	H	HH	HH	HH	HH	HH	HH	HH	HH

L = Low-level input voltage, V_{IL}.
H = High-level input voltage, V_{IH}.

TABLE IX. Product line select for circuit B.

Product line number	Pin identification						
	O_3	O_2	O_1	O_0	A_2	A_1	A_0
0, 32	Z	Z	Z	HH	Z	Z	Z
1, 33	Z	Z	Z	HH	Z	Z	HH
2, 34	Z	Z	Z	HH	Z	HH	Z
3, 35	Z	Z	Z	HH	Z	HH	HH
4, 36	Z	Z	Z	HH	HH	Z	Z
5, 37	Z	Z	Z	HH	HH	Z	HH
6, 38	Z	Z	Z	HH	HH	HH	Z
7, 39	Z	Z	Z	HH	HH	HH	HH
8, 40	Z	Z	HH	Z	Z	Z	Z
9, 41	Z	Z	HH	Z	Z	Z	HH
10, 42	Z	Z	HH	Z	Z	HH	Z
11, 43	Z	Z	HH	Z	Z	HH	HH
12, 44	Z	Z	HH	Z	HH	Z	Z
13, 45	Z	Z	HH	Z	HH	Z	HH
14, 46	Z	Z	HH	Z	HH	HH	Z
15, 47	Z	Z	HH	Z	HH	HH	HH
16, 48	Z	HH	Z	Z	Z	Z	Z
17, 49	Z	HH	Z	Z	Z	Z	HH
18, 50	Z	HH	Z	Z	Z	HH	Z
19, 51	Z	HH	Z	Z	Z	HH	HH
20, 52	Z	HH	Z	Z	HH	Z	Z
21, 53	Z	HH	Z	Z	HH	Z	HH
22, 54	Z	HH	Z	Z	HH	HH	Z
23, 55	Z	HH	Z	Z	HH	HH	HH
24, 56	HH	Z	Z	Z	Z	Z	Z
25, 57	HH	Z	Z	Z	Z	Z	HH
26, 58	HH	Z	Z	Z	Z	HH	Z
27, 59	HH	Z	Z	Z	Z	HH	HH
28, 60	HH	Z	Z	Z	HH	Z	Z
29, 61	HH	Z	Z	Z	HH	Z	HH
30, 62	HH	Z	Z	Z	HH	HH	Z
31, 63	HH	Z	Z	Z	HH	HH	HH

HH = High-level program voltage, V_{IHH}.
Z = High impedance (e.g., 10 kΩ to 5.0 V).

4.4.4 Group D inspection. Group D inspection shall be in accordance with table IV of method 5005 of MIL-STD-883 and as follows. End-point electrical test parameters shall be as specified in table II.

4.5 Methods of inspection. Methods of inspection shall be as specified in the appropriate tables and as follows:

4.5.1 Voltage and current. All voltages given are referenced to the microcircuit ground terminal. Currents given are conventional current and positive when flowing into the referenced terminal.

4.6 Programming/verifying procedure for circuit A and circuit B. The programming specifications on figure 8a, figure 9, and table IV for circuit A, and figure 8b, figure 9, and table VII for circuit B, and the following procedures shall be used for programming the device.

4.6.1 Pre-verification.

a. Raise V_{CC} to 5.0 V.

b. Raise output disable pin, OD, to V_{IHH}.

c. Select an input line by specifying inputs and L/R as shown in table V for circuit A, and table VIII for circuit B.

d. Select anproduct line by specifying A_0, A_1, and A_2 one-of-eight select as shown in table VI for circuit A, and table IX for circuit B.

e. Pulse the CLOCK pin and verify (with CLOCK at V_{IL}) that the output pins, O0 through O3, are in the state corresponding to an unblown fuse. Use the minimum timing conditions as specified on figure 8a for circuit A, and figure 8b for circuit B.
- For verified unblow condition, continue procedure from C through E.
- For verified blown consition, stop procedure.

4.6.2 Programming Algorithm.

a. Raise output disable pin, OD, to V_{IHH}.

b. Lower CLOCK pin to V_{IL}.

c. Select an input line as specified in 4.6.1C.

d. Select a product line as specified in 4.6.1D.

e. Raise V_{CC} to V_{IHH}.

f. Program the fuse by pulsing the output pins of the selected group -one at a time- to V_{IHH}, see figure 8a for circuit A, and figure 8b for circuit B.

g. Lower V_{CC} to 5.0 V.

h. Repeat this procedure from C until pattern is complete.

4.6.3 First verification pass/for all fuse locations.

a. Raise V_{CC} to 4.5 V.

b. Select input line as specified in 4.6.1C.

c. Select a product line as specified in 4.6.1D.

d. Pulse the CLOCK pin and verify (with CLOCK at V_{IL}) that the output pins, O0 through O3, are in the correct state.
- For verified output state, continue procedure.
- For overblown conditions, stop procedure.
- For underblown condition, reject part.

e. Repeat this procedure from B until the entire array is exercised.

4.6.4 High voltage verify/for all fuse locations.

a. Raise V_{CC} to 5.5 V.

b. Repeat from 4.6.3b to 4.6.3d until the entire array is exercised.

Programming should be attempted at room temperature, 15°C to 30°C.

To prevent further programming, security fuses may be blown. Raise V_{CC} to 6.0 V, and raise pins 1 and 11 to V_P volts for 10 ms to 1s.

5. PACKAGING

5.1 Packaging requirements. The requirements for packaging shall be in accordance with MIL-M-38510.

6. NOTES

6.1 Intended use. Microcircuits conforming to this specification are intended for original equipment design application and logistic support of existing equipment.

6.2 Ordering data. The contract or purchase order should specify the following:

a. Complete part number (see 1.2).

b. Requirements for delivery of one copy of the quality conformance inspection data pertinent to the device inspection lot to be supplied with each shipment by the device manufacturer, if applicable.

c. Requirements for certificate of compliance, if applicable.

d. Requirements for notification of change of product or process to the contracting activity in addition to notification to the qualifying activity, if applicable.

e. Requirements for failure analysis (including required test condition of method 5003 of MIL-STD-883), corrective action, and reporting of results, if applicable.

f. Requirements for product assurance options.

g. Requirements for special carriers, lead lengths or lead forming, if applicable. These requirements shall not affect the part number. Unless otherwise specified, these requirements will not apply to direct purchase by or direct shipment to the Government.

h. Requirement for programming the device, including processing option.

i. Requirement for "JAN" marking.

6.3 Abbreviations, symbols, and definitions. The abbreviations, symbols, and definitions used herein are defined in MIL-M-38510, MIL-STD-1331, and as follows:

GND - - - - - - - - - - - - - - - - Electrical ground (common terminal).

I_{IN} - - - - - - - - - - - - - - - - Current flowing into an input terminal.

L/R - - - - - - - - - - - - - - - - Programming left/right identifier

V_{IC} - - - - - - - - - - - - - - - - Input clamp voltage.

V_{IN} - - - - - - - - - - - - - - - - Voltage level at an input terminal.

6.4 Logistic support. Lead materials and finishes (see 3.3) are interchangeable. Unless otherwise specified, microcircuits acquired for Government logistic support will be acquired to device class B (see 1.2.2), and lead material and finish C (see 3.3). Longer length leads and lead forming shall not affect the part number. It is intended that spare devices for logistic support be acquired in the unprogrammed condition (see 3.7.1) and programmed by the maintenance activity, except where use quantities for devices with a specific program or pattern justify stocking of preprogrammed devices.

6.5 Substitutability. The cross-reference information below is presented for the convenience of users. Microcircuits covered by this specification will functionally replace the listed generic-industry type. Generic-industry microcircuit types may not have equivalent operational performance characteristics across military temperature ranges or reliability factors equivalent to MIL-M-38510 device types and may have slight physical variations in relation to case size. The presence of this information shall not be deemed as permitting substitution of generic-industry types for MIL-M-38510 types or as a waiver of any of the provisions of MIL-M-38510.

Military device type	Generic-industry type/manufacturer	Circuit designator	Fusible link	Symbol FSCM number
01	PAL16L8A/Monolithic Memories	A	TiW	CECD/50364
01	PAL16L8A/National	B	TiW	CCXP/27014
02	PAL16R8A/Monolithic Memories	A	TiW	---
02	PAL16R8A/National	B	TiW	---
03	PAL16R6A/Monolithic Memories	A	TiW	---
03	PAL16R6A/National	B	TiW	---
04	PAL16R4A/Monolithic Memories	A	TiW	---
04	PAL16R4A/National	B	TiW	---
05	PAL16X4/Monolithic Memories	A	TiW	---
05	PAL16X4/National	B	TiW	---
06	PAL16A4/Monolithic Memories	A	TiW	---
06	PAL16A4/National	B	TiW	---
07	PAL16L8A-2/Monolithic Memories	A	TiW	---
08	PAL16R8A-2/Monolithic Memories	A	TiW	---
09	PAL16R6A-2/Monolithic Memories	A	TiW	---
10	PAL16R4A-2/Monolithic Memories	A	TiW	---

Custodians:
Air Force - 17

Review activities:
Air Force - 11, 19, 85, 99
DLA - ES

Agent:
DLA - ES

Preparing activity:
Air Force - 17

(Project 5962-F659-2)