MILITARY SPECIFICATION

MICROCIRCUITS, DIGITAL, BIPOLAR, PROGRAMMABLE LOGIC, MONOLITHIC SILICON

This specification is approved for use by all Departments and Agencies of the Department of Defense.

1. SCOPE

1.1 Scope. This specification covers the detail requirements for monolithic silicon, bipolar, programmable logic microcircuits which employ titanium tungsten (Ti-W) as the fusible link or programming element. A choice of case outlines and lead materials and finishes are provided for each type and are reflected in the complete part number.

1.2 Part number. The part number shall be in accordance with MIL-M-38510.

1.2.1 Device types. The device types shall be as follows:

Device type	Circuit
01	16-input 8-output and/or invert gate array
02	16-input 8-output registered and/or gate array
03	16-input 6-output registered and/or gate array
04	16-input 4-output registered and/or gate array
05	16-input 8-output and/or invert gate array
06	16-input 8-output registered and/or gate array
07	16-input 6-output registered and/or gate array
08	16-input 4-output registered and/or gate array
09	16-input 8-output and/or invert gate array
10	16-input 8-output registered and/or gate array
11	16-input 6-output registered and/or gate array
12	16-input 4-output registered and/or gate array

1.2.2 Device class. The device class shall be the product assurance level as defined in MIL-M-38510.

1.2.3 Case outlines. The case outlines shall be designated as follows:

Letter	Case outline, (see MIL-M-38510, appendix C)
R	D-8 (20-lead, 1/4" x 1 1/16"), dual-in-line package
2	C-2 (20-terminal, .350" x .350"), square chip carrier package

Beneficial comments (recommendations, additions, deletions) and any pertinent data which may be of use in improving this document should be addressed to: Rome Air Development Center (RBE-2), Griffiss AFB, NY 13441, by using the self-addressed Standardization Document Improvement Proposal (DD Form 1426) appearing at the end of this document or by letter.

DISTRIBUTION STATEMENT A. Approved for public release; distribution is unlimited.

1.3 Absolute maximum ratings.

Supply voltage - - - - - - - - - - - - - - - - - - -	-0.5 V to +10.75 V
Input voltage range- - - - - - - - - - - - - - - - -	-1.5 V to +10.75 V
Storage temperature range- - - - - - - - - - - - - -	-65°C to +150°C
Lead temperature (soldering, 10 seconds) - - - -	+260°C
Thermal resistance, junction-to-case (θ_{JC}) 1/2/-	(see MIL-M-38510, appendix C)
Output voltage applied - - - - - - - - - - - - - - -	-1.5 V to +10.75 V
Maximum power dissipation (P_D):	
Device types 01, 02, 03, 04- - - - - - - - - - -	1.1 W
Device types 05, 06, 07, 08- - - - - - - - - - -	0.6 W
Device types 09, 10, 11, 12- - - - - - - - - - -	1.2 W
Maximum junction temperature (T_J)- - - - - - - -	+175°C

1.4 Recommended operating conditions.

Supply voltage - - - - - - - - - - - - - - - - - - -	4.5 V minimum to 5.5 V maximum
Minimum high-level input voltage (V_{IH}) - - - -	2.0 V
Maximum low-level input voltage (V_{IL})- - - - -	0.8 V
Case operating temperature range (T_C)- - - - -	-55°C to +125°C

2. APPLICABLE DOCUMENTS

2.1 Government documents.

2.1.1 Specification and standard. The following specification and standard form a part of this specification to the extent specified herein. Unless otherwise specified, the issues of these documents shall be those listed in the issue of the Department of Defense Index of Specifications and Standards (DODISS) and supplement thereto, cited in the solicitation.

SPECIFICATION

MILITARY

MIL-M-38510 - Microcircuits, General Specification for.

STANDARD

MILITARY

MIL-STD-883 - Test Methods and Procedures for Microelectronics.

(Copies of the specification and standards required by contractors in connection with specific acquisition functions should be obtained from the contracting activity or as directed by the contracting activity.)

2.2 Order of precedence. In the event of a conflict between the text of this specification and the references cited herein (except for associated detail specifications, specification sheets, or MS standards), the text of this specification shall take precedence. Nothing in this specification, however shall supersede applicable laws and regulations unless a specific exemption has been obtained.

1/ Heat sinking is recommended to reduce the junction temperature.
2/ Must withstand the added P_D due to short circuit (e.g., I_O) test.

3. REQUIREMENTS

3.1 Detail specification. The individual item requirements shall be in accordance with MIL-M-38510, and as specified herein. When manufacturer-programmed devices are delivered to the user, an altered item drawing shall be prepared by the acquiring activity to specify the required program configuration.

3.2 Design, construction, and physical dimensions. The design, construction, and physical dimensions shall be as specified in MIL-M-38510 and herein.

3.2.1 Terminal connections. Terminal connections shall be as specified on figure 1.

3.2.2 Truth table.

3.2.2.1 Unprogrammed devices. The truth table for unprogrammed devices for contracts involving no altered item drawing shall be as specified on figure 2. When required in groups A, B, or C (see 4.4), the devices shall be programmed by the manufacturer prior to test. A minimum of 50 percent of the total number of fuses shall be programmed or to any altered item drawing pattern which programs at least 25 percent of the total number of fuses.

3.2.2.2 Programmed devices. The truth table for programmed devices shall be as specified by the altered item drawing.

3.2.3 Logic diagram. The logic diagram for unprogrammed devices shall be as specified on figure 3.

3.2.4 Case outlines. The case outlines shall be as specified in 1.2.3.

3.3 Lead material and finish. The lead material and finish shall be in accordance with MIL-M-38510 and 6.4 herein.

3.4 Electrical performance characteristics. The electrical performance characteristics are as specified in table I, and apply over the full recommended case temperature range, unless otherwise specified.

3.5 Electrical test requirements. Electrical test requirements shall be as specified in table II and (where applicable), the altered item drawing for the applicable device type and device class. The subgroups of table III which constitute the minimum electrical test requirements for screening, qualification, and quality conformance, by device class, are specified in table II.

3.6 Marking. Marking shall be in accordance with MIL-M-38510. For programmed devices, the altered item drawing number shall be added to the marking by the programming activity. At the option of the manufacturer marking of the country of origin may be omitted from the body of the microcircuit but shall be retained on the initial container.

3.7 Processing options. Since the device is capable of being programmed by either the manufacturer or the user to result in a wide variety of configurations, two processing options are provided for selection in the contract, using an altered item drawing.

3.7.1 Unprogrammed device delivered to the user. All testing shall be verified through group A testing as defined in 3.2.2.1, tables II and III. It is recommended that users perform subgroups 7 and 9 after programming to verify the specific program configuration.

3.7.2 Manufacturer-programmed device delivered to the user. All testing requirements and quality assurance provisions herein, including the requirements of the altered item drawing, shall be satisfied by the manufacturer prior to delivery.

3.8 Microcircuit group assignment. The devices covered by this specification shall be in microcircuit group number 14 (see MIL-M-38510, appendix E).

TABLE I. Electrical performance characteristics.

Test	Symbol	Test condition 1/ $-55°C \leq T_C \leq +125°C$		Device type	Limits Min	Limits Max	Unit
Input clamp voltage	V_{IC}	V_{CC} = 4.5 V, I_I = -18 mA		All		-1.5	V
High level output voltage	V_{OH}	V_{CC} = 4.5 V, V_{IL} = 0.0 V V_{IH} = 3.0 V, I_{OH} = -2 mA		All	2.4		V
Low level output voltage	V_{OL}	V_{CC} = 4.5 V, V_{IL} = 0.0 V V_{IH} = 3.0 V, I_{OL} = 12 mA		All		0.5	V
High level input current	I_{IH}	V_{CC} = 5.5 V, V_I = 2.7 V 2/	Pin 1, 11	All		50	μA
			All others	All		20	μA
Low level input current	I_{IL}	V_{CC} = 5.5 V, V_I = 0.4 V 2/		All		-.25	mA
Output short circuit current	I_O	V_{CC} = 5.5 V, V_O = 2.25 V 3/		All	-15	-125	mA
Input current	I_I	V_{CC} = 5.5 V, V_I = 5.5 V	Pin 1, 11	All		0.2	mA
			All others	All		0.1	mA
Off-state output current	I_{OZL}	V_{CC} = 5.5 V, V_{IL} = 0.0 V 2/ V_{IH} = 3.0 V, V_O = 0.4 V	Outputs	All		-20	μA
			I/O ports	All		-250	μA
Off-state output current	I_{OZH}	V_{CC} = 5.5 V, V_{IL} = 0.0 V V_{IH} = 3.0 V, V_O = 2.7 V	Outputs	All		20	μA
			I/O ports	All		100	μA
Supply current	I_{CC}	V_{CC} = 5.5 V, V_I = 0.0 V	Outputs open	01, 02, 03, 04		190	mA
				05, 06, 07, 08		105	mA
				09, 10, 11, 12		220	mA
Propagation delay I, I/O, to O, I/O	t_{PHL}	See figure 5 4/		01, 03, 04		20	ns
				05, 07, 08		30	ns
				09, 11, 12		15	ns
Propagation delay I, I/O, to O, I/O	t_{PLH}			01, 03, 04		20	ns
				05, 07, 08		30	ns
				09, 11, 12		15	ns

See footnotes at end of table.

TABLE I. Electrical performance characteristics - Continued.

Test	Symbol	Test condition 1/ -55°C ≤ T_C ≤ +125°C	Device type	Limits Min	Limits Max	Unit
Enable time I, I/O, to O, I/O	t_{PZH}	See figure 5 4/	01, 03, 04		20	ns
			05, 07, 08		30	ns
			09, 11, 12		15	ns
Enable time I, I/O, to O, I/O	t_{PZL}		01, 03, 04		20	ns
			05, 07, 08		30	ns
			09, 11, 12		15	ns
Disable time I, I/O, to O, I/O	t_{PHZ}		01, 03, 04		20	ns
			05, 07, 08		30	ns
			09, 11, 12		15	ns
Disable time I, I/O, to O, I/O	t_{PLZ}		01, 03, 04		20	ns
			05, 07, 08		30	ns
			09, 11, 12		15	ns
Enable time /OE to Q	t_{PZH}	See figure 5 5/	02, 03, 04		15	ns
			06, 07, 08		25	ns
			10, 11, 12		12	ns
Enable time /OE to Q	t_{PZL}		02, 03, 04		15	ns
			06, 07, 08		25	ns
			10, 11, 12		12	ns
Disable time /OE to Q	t_{PHZ}		02, 03, 04		15	ns
			06, 07, 08		25	ns
			10, 11, 12		12	ns

See footnotes at end of table.

TABLE I. Electrical performance characteristics - Continued.

Test	Symbol	Test condition 1/ -55°C ≤ T_C ≤ +125°C	Device type	Limits Min	Limits Max	Unit
Disable time /OE to Q	t_{PLZ}	See figure 5 5/	02, 03, 04		15	ns
			06, 07, 08		25	ns
			10, 11, 12		12	ns
Propagation delay clock to Q	t_{PCH}		02, 03, 04		15	ns
			06, 07, 08		20	ns
			10, 11, 12		12	ns
Propagation delay clock to Q	t_{PCL}		02, 03, 04		15	ns
			06, 07, 08		20	ns
			10, 11, 12		12	ns
Minimum clock pulse	$t_{P(CL)}$		02, 03, 04	12		ns
			06, 07, 08	20		ns
			10, 11, 12	10		ns
Minimum setup time	t_{SU}		02, 03, 04	20		ns
			06, 07, 08	25		ns
			10, 11, 12	15		ns
Hold time	t_H		All	0		ns
Maximum clock frequency I, I/O to O, I/O	f_{MAX}		02, 03, 04	40		MHz
			06, 07, 08	25		MHz
			10, 11, 12	50		MHz

1/ Complete terminal conditions shall be as specified in table III.
2/ I/O terminal leakage is the worst case I_{IX} or I_{OZH}.
3/ The output conditions have been chosen to produce a current that closely approximates one half of the true short-circuit output current, I_O. Only one output tested at a time.
4/ Applies to non-registered output only, with internal output enables.
5/ Applies to registered outputs only, with external output enable (pin 11).

TABLE II. Electrical test requirements. 1/2/3/

MIL-STD-883 test requirements	Subgroups (per table III)	
	Class B devices	Class S devices
Interim electrical test parameters (method 5004)	1	1
Final electrical test parameters (method 5004) for unprogrammed devices	1*, 2, 3, 7*, 8	1*, 2, 3, 7*, 8
Final electrical test parameters (method 5004) for programmed devices	1*, 2, 3, 7*, 8, 9	1*, 2, 3, 7*, 8, 9, 10, 11
Group A test requirements (method 5005)	1, 2, 3, 7, 8, 9, 10, 11	1, 2, 3, 7, 8, 9, 10, 11
Group B end-point electrical parameters (method 5005)	N/A	1, 2, 3, 7, 8, 9, 10, 11
Group C end-point electrical parameters (method 5005)	1, 2, 3, 7, 8	N/A
Group D end-point electrical parameters (method 5005)	1, 2, 3, 7, 8	1, 2, 3, 7, 8

1/ (*) indicates PDA applies to subgroups 1 and 7 (see 4.2c).
2/ Any or all subgroups may be combined when using high-speed testers.
3/ Subgroup 7 and 8 shall consist of verifying the pattern specified.

4. QUALITY ASSURANCE PROVISIONS

4.1 Sampling and inspection. Sampling and inspection procedures shall be in accordance with MIL-M-38510 and methods 5005 and 5007 of MIL-STD-883, except as modified herein.

4.2 Screening. Screening shall be in accordance with method 5004 of MIL-STD-883, and shall be conducted on all devices prior to qualification, and quality conformance inspection. The following additional criteria shall apply:

a. Burn-in test (method 1015 of MIL-STD-883). Test condition D or E using the circuit shown on figure 4 or equivalent.

b. Interim and final electrical tests shall be as specified in table II, except interim electrical tests prior to burn-in is optional at the discretion of the manufacturer.

c. The percent defective allowable (PDA) shall be as specified in MIL-M-38510.

d. All devices processed by the manufacturer to an altered item drawing shall be programmed prior to burn-in.

4.3 Qualification inspection. Qualification inspection shall be in accordance with MIL-M-38510. Inspections to be performed shall be those specified herein for groups A, B, C, and D inspections (see 4.4.1 through 4.4.4). Qualification data for subgroups 7, 8, 9, 10, and 11 shall be by attributes only.

4.3.1 Qualification extension. When authorized by the qualifying activity, for qualification inspection, if a manufacturer qualifies the PAL device with the worst case metal mask which is processed (e.g., same mask sets excluding metal mask) and manufactured on the same certified line to the other PAL device types on this specification, then the other PAL device types may be part I qualfied by conducting only group A electrical tests and any electricals specified as additional group C subgroups and submitting data in accordance with MIL-M-38510, appendix D (i.e. groups B, C, and D tests are not required for qualification).

4.4 Quality conformance inspection. Quality conformance inspection shall be in accordance with MIL-M-38510. Inspections to be performed shall be those specified in method 5005 of MIL-STD-883 and herein for groups A, B, C, and D inspections (see 4.4.1 through 4.4.4).

4.4.1 Group A inspection. Group A inspection shall be in accordance with table I of method 5005 of MIL-STD-883 and as follows:

a. Tests shall be as specified in table II.

b. Subgroups 4, 5, and 6 of table I of method 5005 of MIL-STD-883 shall be omitted.

c. For unprogrammed devices, a sample shall be selected to satisfy programmability requirements prior to performing subgroups 9, 10, and 11. Twelve devices shall be submitted to programming (see 3.2.2.1). If more than two devices fail to program, the lot shall be rejected. At the manufacturers option, the sample may be increased to 24 total devices with no more than four total device failures allowable.

d. For unprogrammed devices, 10 devices from the programmability sample shall be submitted to the requirements of the specified tests of subgroups 1, 2, and 3 designated for programmed devices only. If any device fails, the lot shall be rejected. At the manufacturers option, the sample may be increased to 20 total devices with no more than two total device failures allowable.

e. For unprogrammed devices, 10 devices from the programmability sample shall be submitted to the requirements of group A, subgroups 9, 10, and 11. If more than two total devices fail the lot shall be rejected. At the manufacturers option, the sample may be increased to 20 total devices with no more than four total device failures allowable.

4.4.2 Group B inspection. Group B inspection shall be in accordance with table II of method 5005 of MIL-STD-883.

a. Class S devices selected for testing in subgroup 5 (table IIa of method 5005 of MIL-STD-883) shall be programmed in accordance with 3.2.2.

b. Electrical parameters shall be as specified in table II herein.

c. Steady-state life test for class S devices shall be in accordance with table IIa (subgroup 5) of method 5005 of MIL-STD-883 using a circuit submitted to the qualifying activity for approval. If the alternate burn-in conditions are used, the circuit on figure 5, or equivalent, shall be used.

4.4.3 Group C inspection. Group C inspection shall be in accordance with table III of method 5005 of MIL-STD-883 and as follows:

a. End-point electrical test shall be as specified in table II.

b. Steady state life test (method 1005 of MIL-STD-883) conditions:

(1) Test condition D or E using the circuit shown on figure 4 or equivalent.

(2) T_A = +125°C minimum.

(3) Test duration: 1,000 hours except as permitted by method 1005 of MIL-STD-883.

Device types 01, 05, and 09

Case R

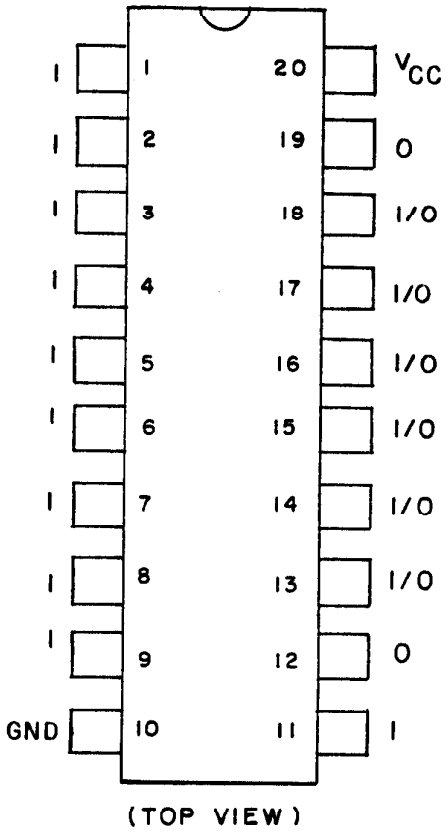

Device types 01, 05, and 09

Case 2

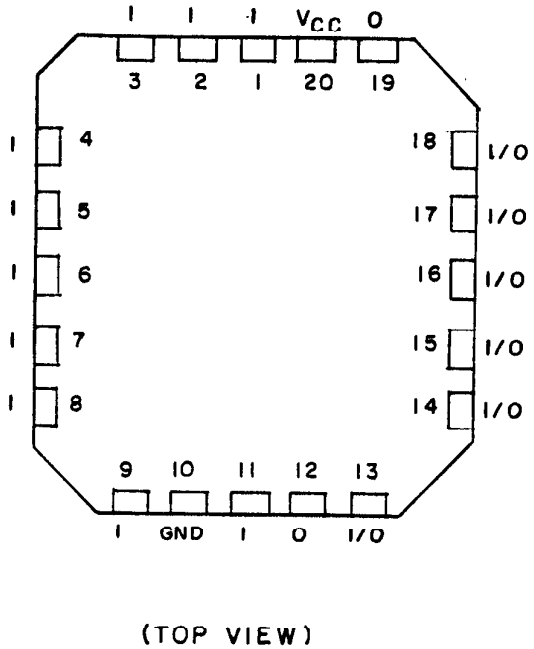

FIGURE 1. Terminal connections.

Device types 02, 06, and 10

Case R

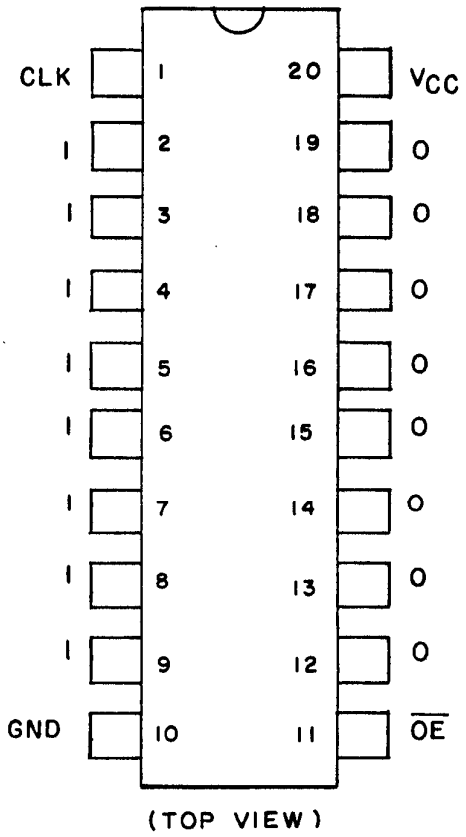

Device types 02, 06, and 10

Case 2

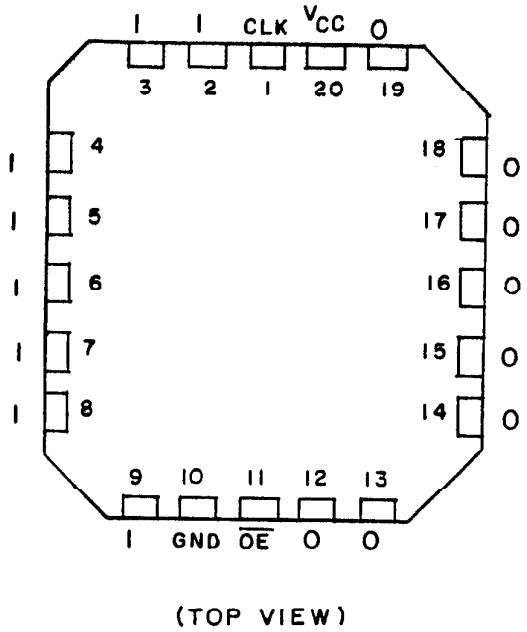

FIGURE 1. Terminal connections. - Continued.

Device types 03, 07, and 11

Case R

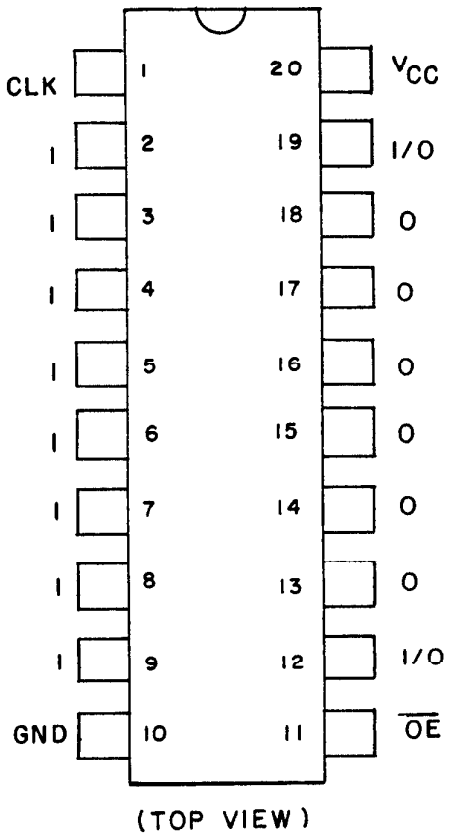

Device types 03, 07, and 11

Case 2

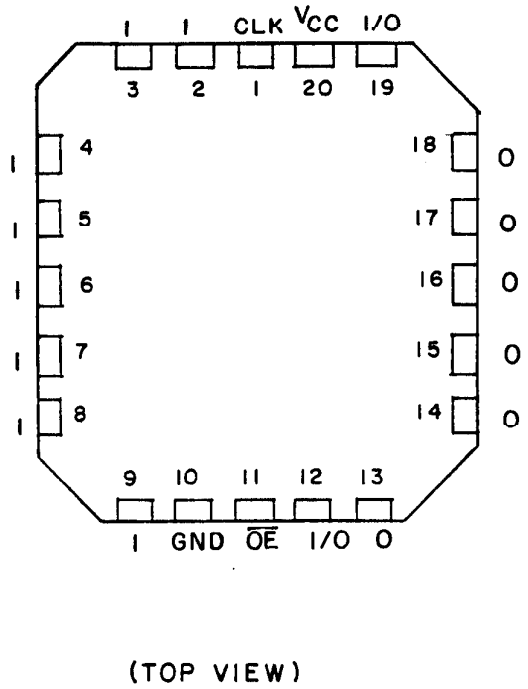

FIGURE 1. Terminal connections - Continued.

Device types 04, 08, and 12

Case R

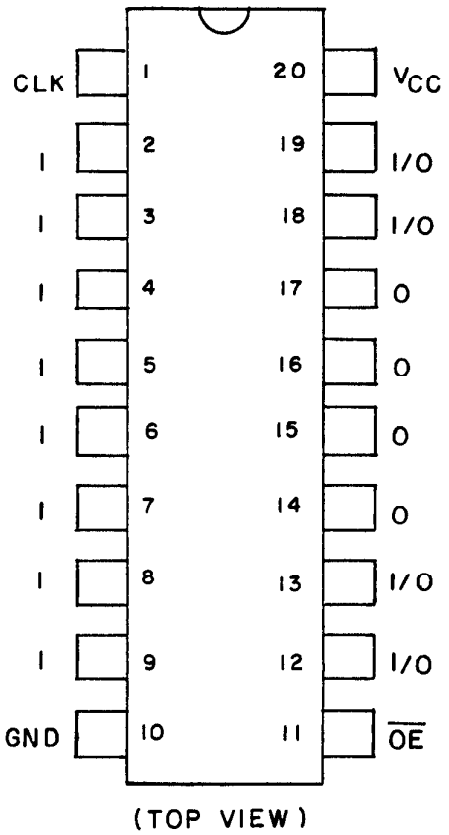

Device types 04, 08, and 12

Case 2

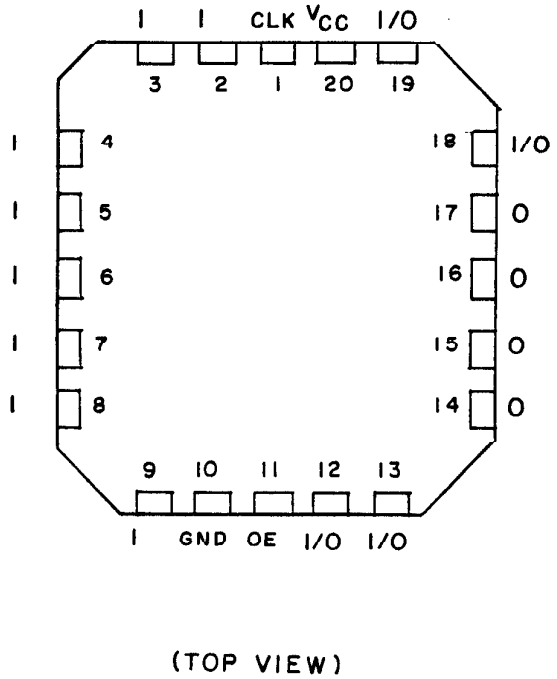

FIGURE 1. Terminal connections - Continued.

Device types 01, 05, and 09

Truth table																	
Inputs										Outputs							
I_9	I_8	I_7	I_6	I_5	I_4	I_3	I_2	I_1	I_0	D_7	I/D_6	I/D_5	I/D_4	I/D_3	I/D_2	I/D_1	D_0
X	X	X	X	X	X	X	X	X	X	Z	Z	Z	Z	Z	Z	Z	Z

Device types 02, 06, and 10

Truth table																	
Inputs										Outputs							
OE	I_7	I_6	I_5	I_4	I_3	I_2	I_1	I_0	CLK	D_7	D_6	D_5	D_4	D_3	D_2	D_1	D_0
H	X	X	X	X	X	X	X	X	CLK	Z	Z	Z	Z	Z	Z	Z	Z
L	X	X	X	X	X	X	X	X	CLK	H	H	H	H	H	H	H	H

Device types 03, 07, and 11

Truth table																	
Inputs										Outputs							
OE	I_7	I_6	I_5	I_4	I_3	I_2	I_1	I_0	CLK	I/D_7	D_6	D_5	D_4	D_3	D_2	D_1	I/D_0
H	X	X	X	X	X	X	X	X	CLK	Z	Z	Z	Z	Z	Z	Z	Z
L	X	X	X	X	X	X	X	X	CLK	Z	H	H	H	H	H	H	Z

Device types 04, 08, and 12

Truth table																	
Inputs										Outputs							
OE	I_7	I_6	I_5	I_4	I_3	I_2	I_1	I_0	CLK	I/D_7	I/D_6	D_5	D_4	D_3	D_2	I/D_1	I/D_0
H	X	X	X	X	X	X	X	X	CLK	Z	Z	Z	Z	Z	Z	Z	Z
L	X	X	X	X	X	X	X	X	CLK	Z	Z	H	H	H	H	Z	Z

FIGURE 2. Truth table (unprogrammed).

Device types 01, 05, and 09

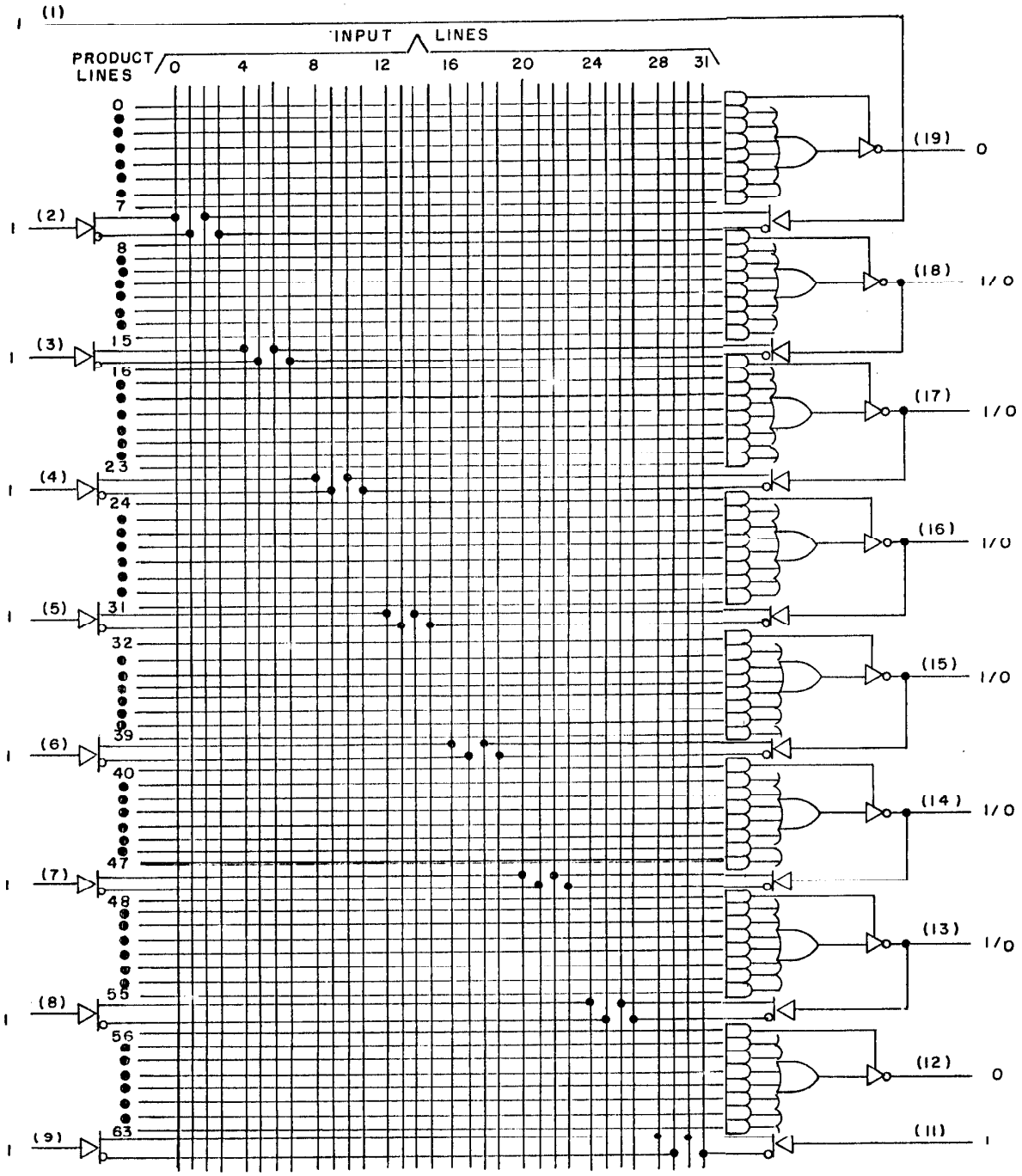

FIGURE 3. Logic diagrams (unprogrammed).

Device types 02, 06, and 10

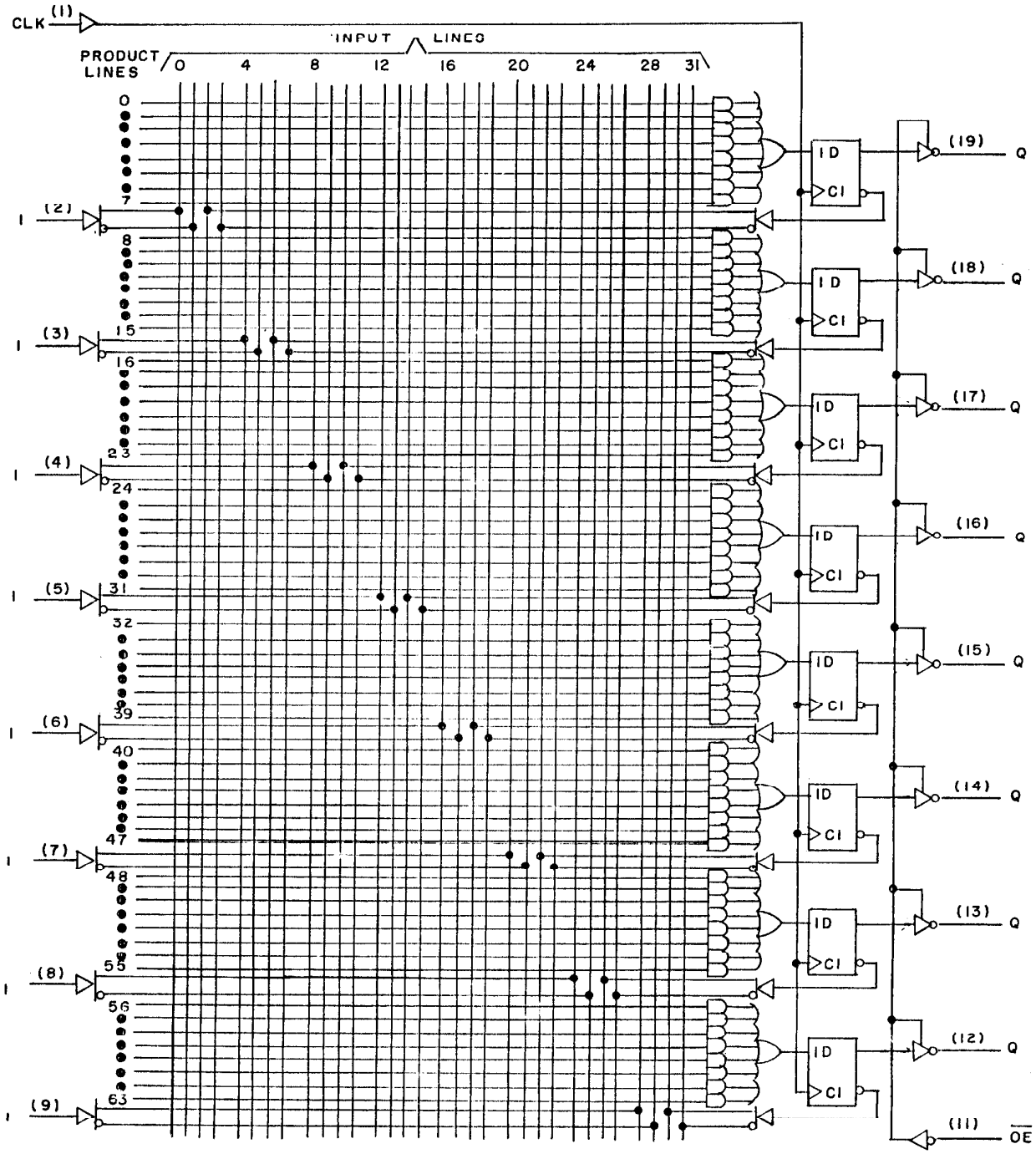

FIGURE 3. Logic diagrams (unprogrammed) - Continued.

Device types 03, 07, and 11

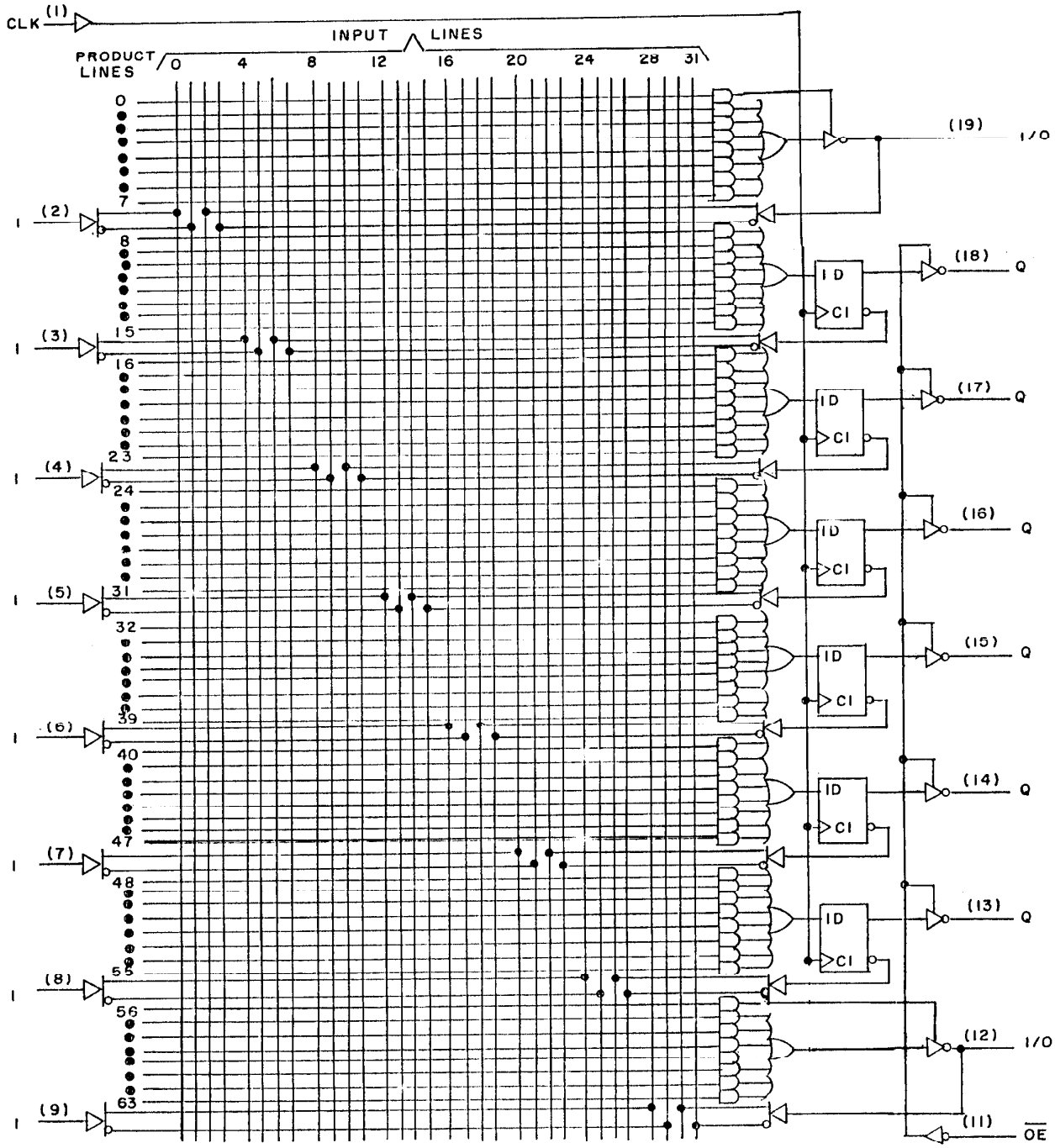

FIGURE 3. Logic diagrams (unprogrammed) - Continued.

Device types 04, 08, and 12

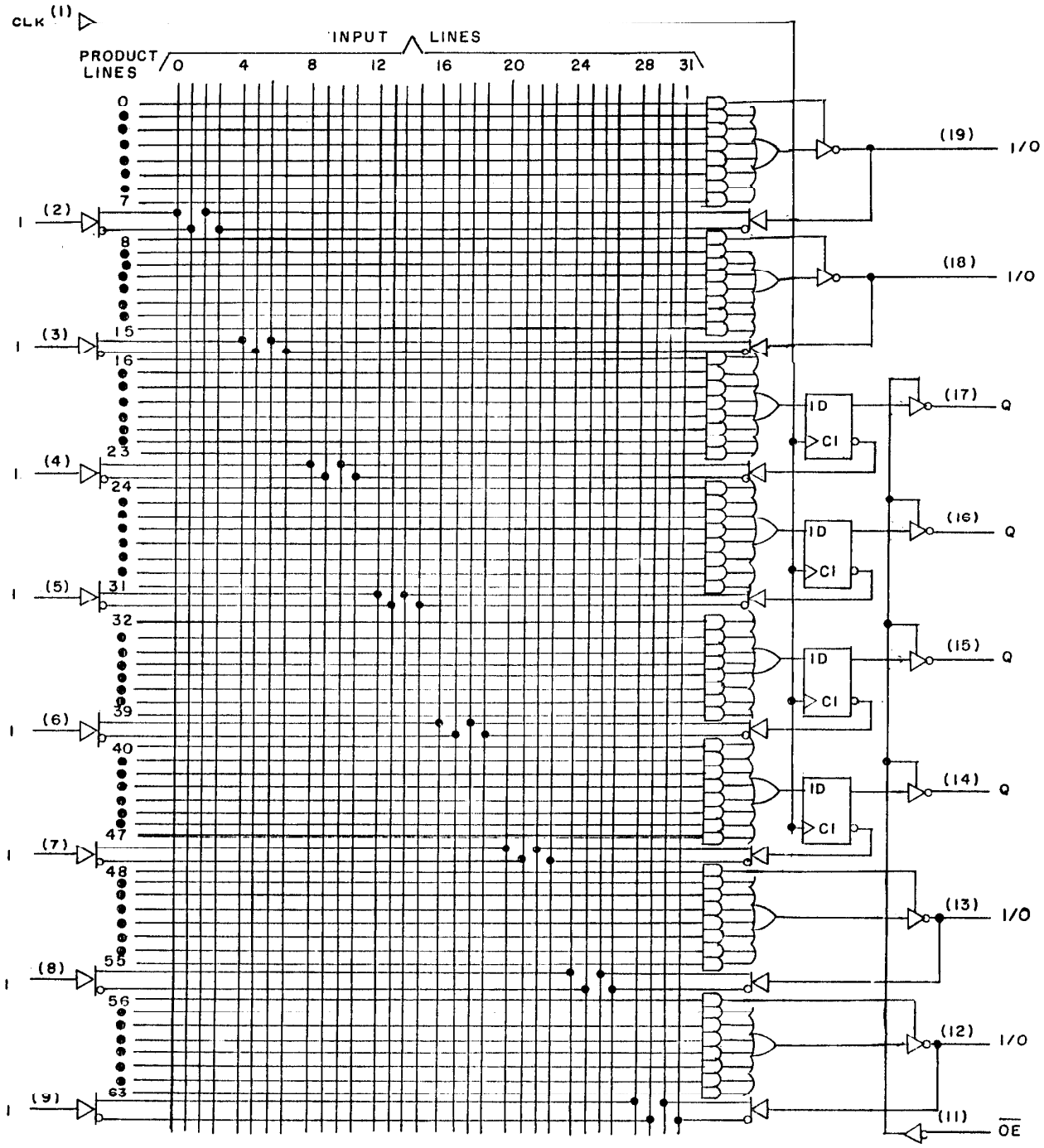

FIGURE 3. Logic diagrams (unprogrammed) - Continued.

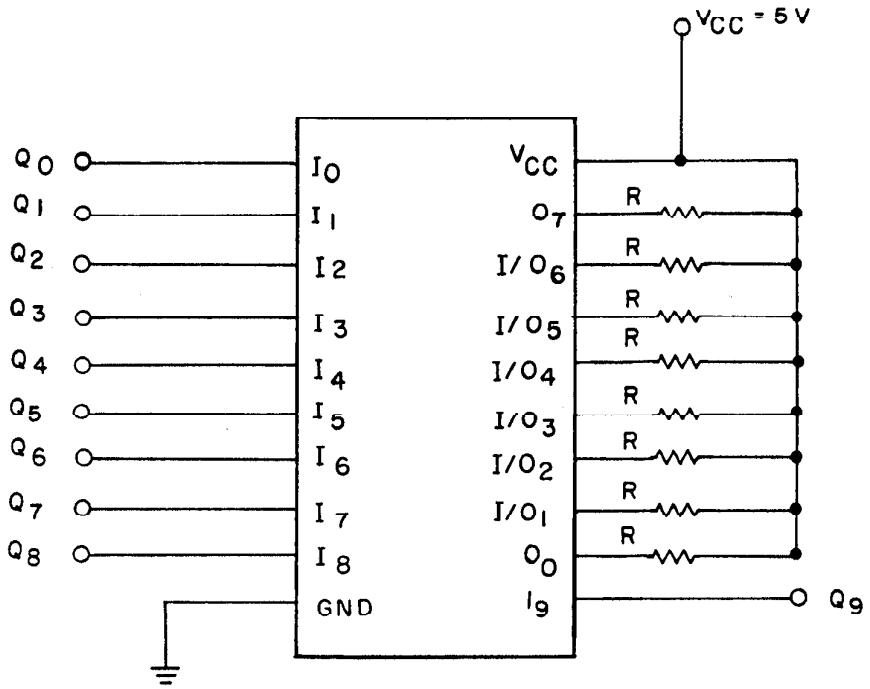

NOTES:

1. R = 470 ohms +/-5 percent. All outputs shall have seperate identical loads.
2. All pulse generators have the following characteristics: V_{IL} = -0.5 V minimum to +0.8 V maximum; V_{IH} = 2.0 V minimum to 5.5 V maximum; 50 percent +/-15 percent duty cycle and frequencies as specified in note 4.
3. V_{CC} shall be high enough to insure 5.0 V minimum at the device V_{CC} terminal.
4. Input frequencies are as follows:

Input	Frequency (+/-50%)	Input	Frequency (+/-50%)
Q_0	f_0 = 100 kHz	Q_5	f_5 = 1/32 f_0
Q_1	f_1 = 1/2 f_0	Q_6	f_6 = 1/84 f_0
Q_2	f_2 = 1/4 f_0	Q_7	f_7 = 1/128 f_0
Q_3	f_3 = 1/8 f_0	Q_8	f_8 = 1/256 f_0
Q_4	f_4 = 1/16 f_0	Q_9	f_9 = 1/512 f_0

FIGURE 4. Burn-in and life test circuit for device types 01, 05, and 09.

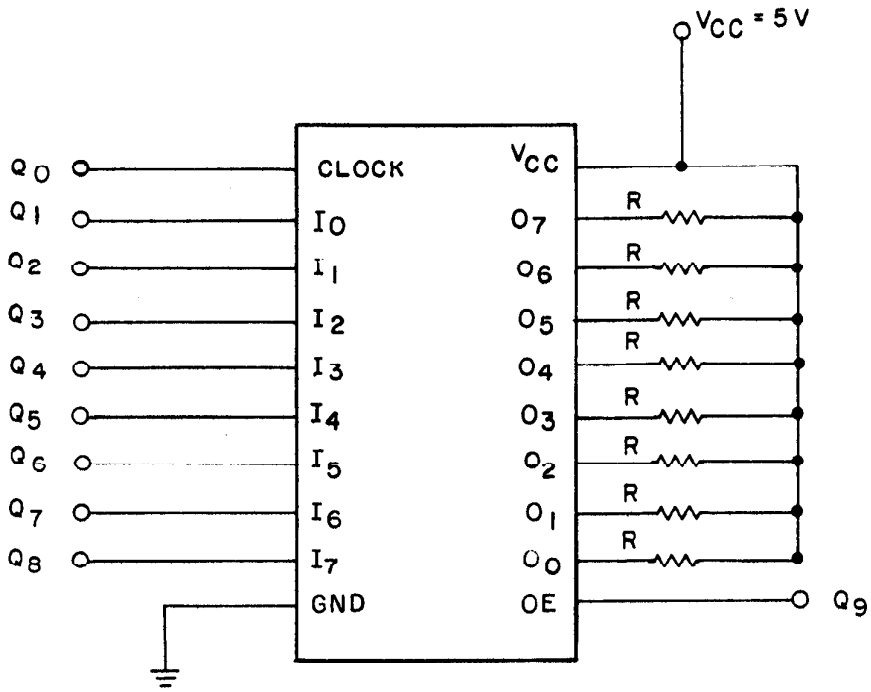

NOTES:

1. R = 470 ohms +/-5 percent. All outputs shall have seperate identical loads.
2. All pulse generators have the following characteristics: V_{IL} = -0.5 V minimum to +0.8 V maximum; V_{IH} = 2.0 V minimum to 5.5 V maximum; 50 percent +/-15 percent duty cycle and frequencies as specified in note 4.
3. V_{CC} shall be high enough to insure 5.0 V minimum at the device V_{CC} terminal.
4. Input frequencies are as follows:

Input	Frequency (+/-50%)	Input	Frequency (+/-50%)
Q_0	f_0 = 100 kHz	Q_5	f_5 = 1/32 f_0
Q_1	f_1 = 1/2 f_0	Q_6	f_6 = 1/84 f_0
Q_2	f_2 = 1/4 f_0	Q_7	f_7 = 1/128 f_0
Q_3	f_3 = 1/8 f_0	Q_8	f_8 = 1/256 f_0
Q_4	f_4 = 1/16 f_0	Q_9	f_9 = 1/512 f_0

FIGURE 4. Burn-in and life test circuit for device types 02, 06, and 10 - Continued.

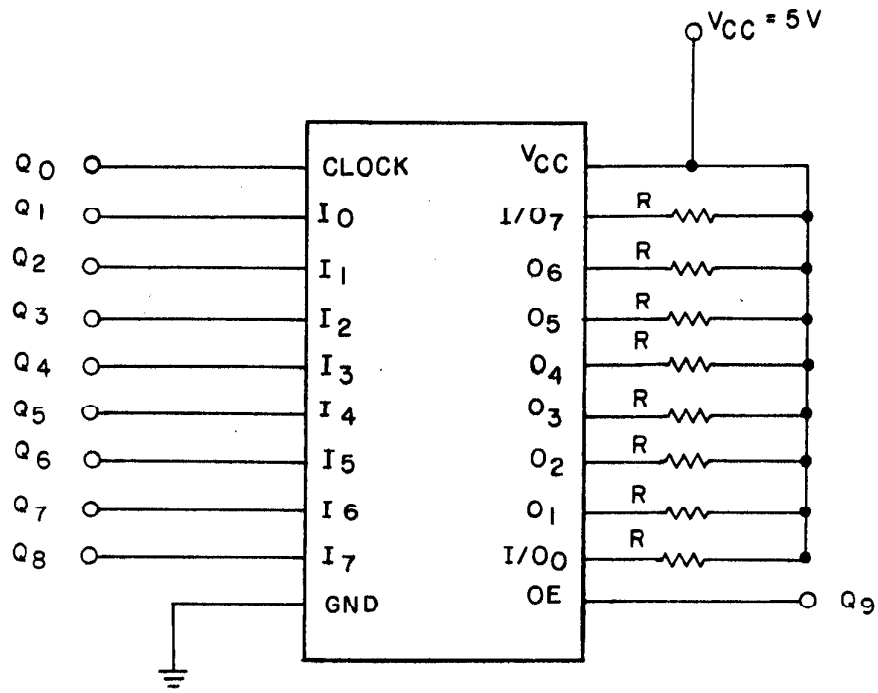

NOTES:

1. R = 470 ohms +/-5 percent. All outputs shall have seperate identical loads.
2. All pulse generators have the following characteristics: V_{IL} = -0.5 V minimum to +0.8 V maximum; V_{IH} = 2.0 V minimum to 5.5 V maximum; 50 percent +/-15 percent duty cycle and frequencies as specified in note 4.
3. V_{CC} shall be high enough to insure 5.0 V minimum at the device V_{CC} terminal.
4. Input frequencies are as follows:

Input	Frequency (+/-50%)	Input	Frequency (+/-50%)
Q_0	f_0 = 100 kHz	Q_5	f_5 = 1/32 f_0
Q_1	f_1 = 1/2 f_0	Q_6	f_6 = 1/84 f_0
Q_2	f_2 = 1/4 f_0	Q_7	f_7 = 1/128 f_0
Q_3	f_3 = 1/8 f_0	Q_8	f_8 = 1/256 f_0
Q_4	f_4 = 1/16 f_0	Q_9	f_9 = 1/512 f_0

FIGURE 4. Burn-in and life test circuit for device types 03, 07, and 11 - Continued.

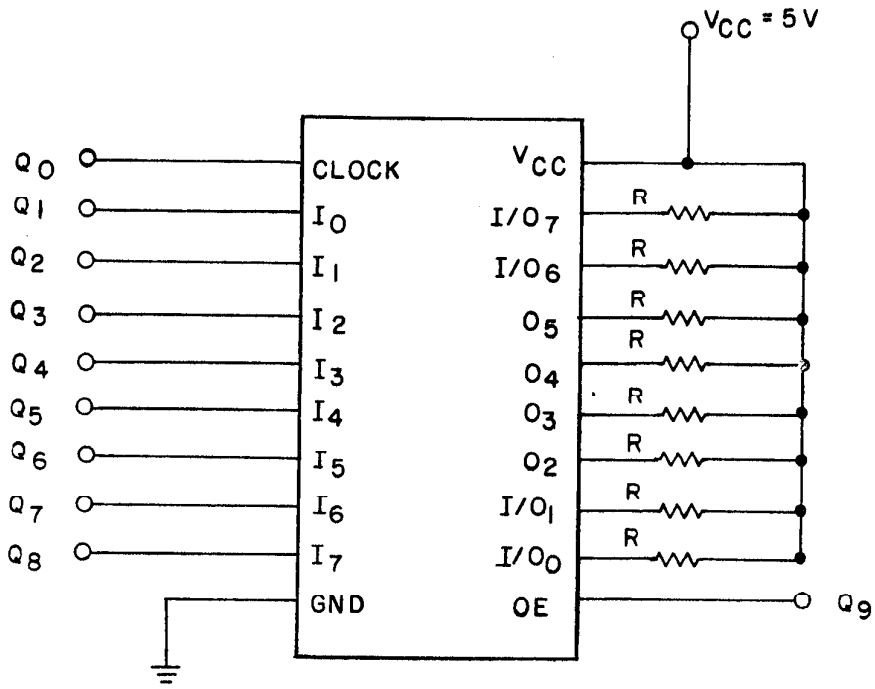

NOTES:

1. R = 470 ohms +/-5 percent. All outputs shall have seperate identical loads.
2. All pulse generators have the following characteristics: V_{IL} = -0.5 V minimum to +0.8 V maximum; V_{IH} = 2.0 V minimum to 5.5 V maximum; 50 percent +/-15 percent duty cycle and frequencies as specified in note 4.
3. V_{CC} shall be high enough to insure 5.0 V minimum at the device V_{CC} terminal.
4. Input frequencies are as follows:

Input	Frequency (+/-50%)	Input	Frequency (+/-50%)
Q_0	f_0 = 100 kHz	Q_5	f_5 = 1/32 f_0
Q_1	f_1 = 1/2 f_0	Q_6	f_6 = 1/84 f_0
Q_2	f_2 = 1/4 f_0	Q_7	f_7 = 1/128 f_0
Q_3	f_3 = 1/8 f_0	Q_8	f_8 = 1/256 f_0
Q_4	f_4 = 1/16 f_0	Q_9	f_9 = 1/512 f_0

FIGURE 4. Burn-in and life test circuit for device types 04, 08, and 12 - Continued

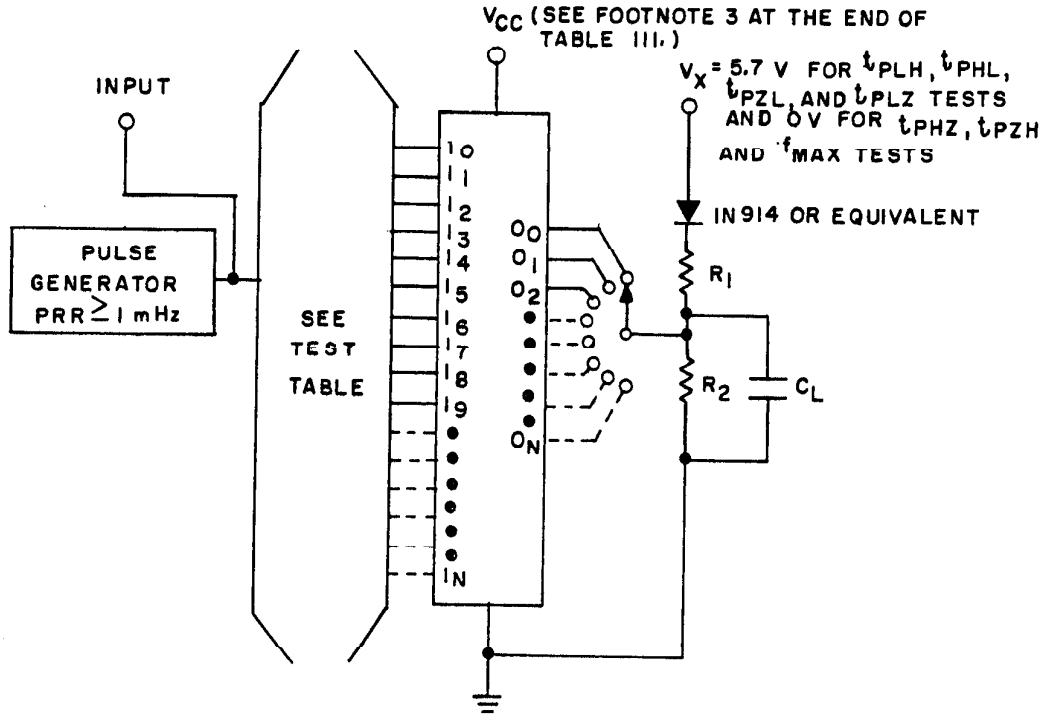

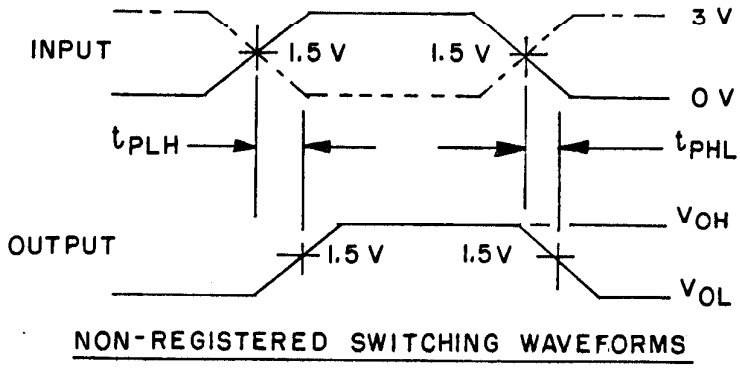

FIGURE 5. Switching waveforms.

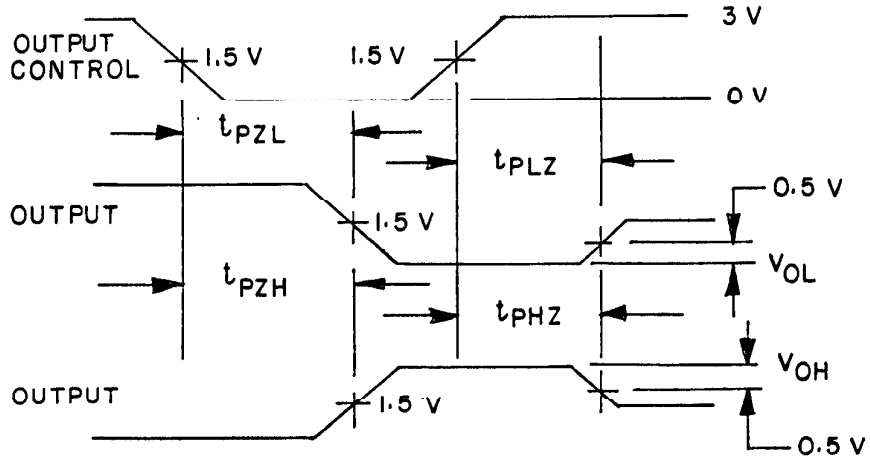

OUTPUT CONTROL SWITCHING WAVEFORM

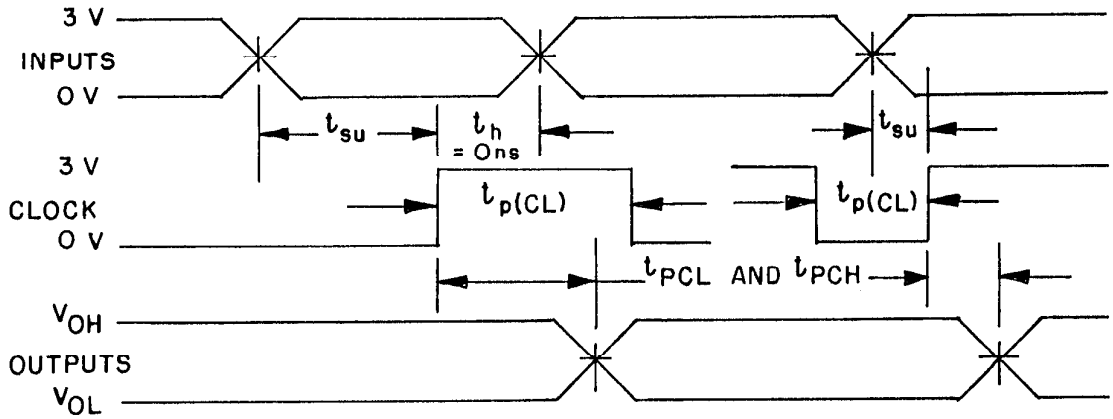

REGISTERED SWITCHING WAVEFORM

NOTES:

1. Test table for devices programmed in accordance with an altered item drawing may be replaced by the equivalent tests which apply to the specific program configuration for the resulting PAL.

2. C_L = 50 pF minimum, including jig and probe capacitance; R1 = 365Ω ±2%; R2 = 715Ω ±2%.

3. Outputs may be under load simultaneously.

4. Verification of limit conditions $t_p(CL)$. t_{su}, and t_h = 0 ns may be conducted by simultaneously setting the conditions to the specified limit values of table III and observing for proper output state change.

FIGURE 5. Switching waveforms - Continued.

TABLE III. Group A inspection for device type 01.
Terminal conditions (pins not designated may be high ≥ 2.0 V, low ≤ 0.8 V, or open).

Symbol	MIL-STD-883 method	Cases R, 2 Test no.	1 I_0	2 I_1	3 I_2	4 I_3	5 I_4	6 I_5	7 I_6	8 I_7	9 I_8	10 GND	11 I_9	12 O_0	13 I/O_1	14 I/O_2
V_{IC}		1	-18 mA									GND				
		2		-18 mA								"				
		3			-18 mA							"				
		4				-18 mA						"				
		5					-18 mA					"				
		6						-18 mA				"				
		7							-18 mA			"				
		8								-18 mA		"				
		9									-18 mA	"				
		10										"	-18 mA			
		11										"			-18 mA	
		12										"				-18 mA
		13										"				
		14										"				
		15										"				
		16										"				
V_{OL}	3007	17	1/	1/	1/	1/	1/	1/	1/	1/	1/	"	1/	12 mA		
		18	"	"	"	"	"	"	"	"	"	"	"		12 mA	
		19	"	"	"	"	"	"	"	"	"	"	"			12 mA
		20	"	"	"	"	"	"	"	"	"	"	"			
		21	"	"	"	"	"	"	"	"	"	"	"			
		22	"	"	"	"	"	"	"	"	"	"	"			
		23	"	"	"	"	"	"	"	"	"	"	"			
		24	"	"	"	"	"	"	"	"	"	"	"			
V_{OH}	3006	25	"	"	"	"	"	"	"	"	"	"	"	-2 mA		
		26	"	"	"	"	"	"	"	"	"	"	"		-2 mA	
		27	"	"	"	"	"	"	"	"	"	"	"			-2 mA
		28	"	"	"	"	"	"	"	"	"	"	"			
		29	"	"	"	"	"	"	"	"	"	"	"			
		30	"	"	"	"	"	"	"	"	"	"	"			
		31	"	"	"	"	"	"	"	"	"	"	"			
		32	"	"	"	"	"	"	"	"	"	"	"			
I_{IL}	3009	33	0.4 V									"				
		34		0.4 V								"				
		35			0.4 V							"				
		36				0.4 V						"				
		37					0.4 V					"				
		38						0.4 V				"				
		39							0.4 V			"				
		40								0.4 V		"				
		41									0.4 V	"				
		42										"	0.4 V			
		43										"			0.4 V	
		44										"				0.4 V
		45										"				
		46										"				
		47										"				
		48										"				

See footnotes at end of table.

TABLE III. Group A inspection for device type 01 - Continued.
Terminal conditions (pins not designated may be high ≥ 2.0 V, low ≤ 0.8 V, or open).

Symbol	MIL-STD-883 method	Cases R, 2 Test no.	15 I/O_3	16 I/O_4	17 I/O_5	18 I/O_6	19 O_7	20 V_{CC}	Measured terminals	Test limits: Subgroup 1 T_C = +25°C Min	Subgroup 1 Max	Subgroup 2 T_C = +125°C Min	Subgroup 2 Max	Subgroup 3 T_C = -55°C Min	Subgroup 3 Max	Unit
V_{IC}		1						4.5 V	I_0		-1.5		-1.5		-1.5	V
		2						"	I_1		"		"		"	"
		3						"	I_2		"		"		"	"
		4						"	I_3		"		"		"	"
		5						"	I_4		"		"		"	"
		6						"	I_5		"		"		"	"
		7						"	I_6		"		"		"	"
		8						"	I_7		"		"		"	"
		9						"	I_8		"		"		"	"
		10						"	I_9		"		"		"	"
		11						"	I/O_1		"		"		"	"
		12						"	I/O_2		"		"		"	"
		13	-18 mA					"	I/O_3		"		"		"	"
		14		-18 mA				"	I/O_4		"		"		"	"
		15			-18 mA			"	I/O_5		"		"		"	"
		16				-18 mA		"	I/O_6		"		"		"	"
V_{OL}	3007	17						"	O_0		0.5		0.5		0.5	"
		18						"	I/O_1		"		"		"	"
		19						"	I/O_2		"		"		"	"
		20	12 mA					"	I/O_3		"		"		"	"
		21		12 mA				"	I/O_4		"		"		"	"
		22			12 mA			"	I/O_5		"		"		"	"
		23				12 mA		"	I/O_6		"		"		"	"
		24					12 mA	"	O_7		"		"		"	"
V_{OH}	3006	25						"	O_0	2.4		2.4		2.4		"
		26						"	I/O_1	"		"		"		"
		27						"	I/O_2	"		"		"		"
		28	-2 mA					"	I/O_3	"		"		"		"
		29		-2 mA				"	I/O_4	"		"		"		"
		30			-2 mA			"	I/O_5	"		"		"		"
		31				-2 mA		"	I/O_6	"		"		"		"
		32					-2 mA	"	O_7	"		"		"		"
I_{IL}	3009	33						5.5 V	I_0		-0.25		-0.25		-0.25	mA
		34						"	I_1		"		"		"	"
		35						"	I_2		"		"		"	"
		36						"	I_3		"		"		"	"
		37						"	I_4		"		"		"	"
		38						"	I_5		"		"		"	"
		39						"	I_6		"		"		"	"
		40						"	I_7		"		"		"	"
		41						"	I_8		"		"		"	"
		42						"	I_9		"		"		"	"
		43						"	I/O_1		"		"		"	"
		44						"	I/O_2		"		"		"	"
		45	0.4 V					"	I/O_3		"		"		"	"
		46		0.4 V				"	I/O_4		"		"		"	"
		47			0.4 V			"	I/O_5		"		"		"	"
		48				0.4 V		"	I/O_6		"		"		"	"

TABLE III. Group A inspection for device type 01 - Continued.
Terminal conditions (pins not designated may be high ≥ 2.0 V, low ≤ 0.8 V, or open).

Symbol	MIL-STD-883 method	Cases R, 2 Test no.	1	2	3	4	5	6	7	8	9	10	11	12	13	14
			I_0	I_1	I_2	I_3	I_4	I_5	I_6	I_7	I_8	GND	I_9	O_0	I/O_1	I/O_2
I_{IH}	3010	49	2.7 V									GND				
		50		2.7 V								"				
		51			2.7 V							"				
		52				2.7 V						"				
		53					2.7 V					"				
		54						2.7 V				"				
		55							2.7 V			"				
		56								2.7 V		"				
		57									2.7 V	"				
		58										"	2.7 V			
I_I		59	5.5 V									"				
		60		5.5 V								"				
		61			5.5 V							"				
		62				5.5 V						"				
		63					5.5 V					"				
		64						5.5 V				"				
		65							5.5 V			"				
		66								5.5 V		"				
		67									5.5 V	"				
		68										"	5.5 V			
		69										"			5.5 V	
		70										"				5.5 V
		71										"				
		72										"				
		73										"				
		74										"				
I_0		75	1/	1/	1/	1/	1/	1/	1/	1/	1/	"	1/	2.25 V		
		76	"	"	"	"	"	"	"	"	"	"	"		2.25 V	
		77	"	"	"	"	"	"	"	"	"	"	"			2.25 V
		78	"	"	"	"	"	"	"	"	"	"	"			
		79	"	"	"	"	"	"	"	"	"	"	"			
		80	"	"	"	"	"	"	"	"	"	"	"			
		81	"	"	"	"	"	"	"	"	"	"	"			
		82	"	"	"	"	"	"	"	"	"	"	"			
I_{OZH}		83	"	"	"	"	"	"	"	"	"	"	"	2.7 V		
		84	"	"	"	"	"	"	"	"	"	"	"		2.7 V	
		85	"	"	"	"	"	"	"	"	"	"	"			2.7 V
		86	"	"	"	"	"	"	"	"	"	"	"			
		87	"	"	"	"	"	"	"	"	"	"	"			
		88	"	"	"	"	"	"	"	"	"	"	"			
		89	"	"	"	"	"	"	"	"	"	"	"			
		90	"	"	"	"	"	"	"	"	"	"	"			
I_{OZL}		91	"	"	"	"	"	"	"	"	"	"	"	0.4 V		
		92	"	"	"	"	"	"	"	"	"	"	"			
I_{CC}	3005	93										"				

See footnotes at end of table.

TABLE III. Group A inspection for device type 01 - Continued.
Terminal conditions (pins not designated may be high ≥ 2.0 V, low ≤ 0.8 V, or open).

Symbol	MIL-STD-883 method	Cases R, 2 Test no.	15 I/O_3	16 I/O_4	17 I/O_5	18 I/O_6	19 O_7	20 V_{CC}	Measured terminals	Test limits: Subgroup 1 T_C = +25°C Min	Subgroup 1 Max	Subgroup 2 T_C = +125°C Min	Subgroup 2 Max	Subgroup 3 T_C = -55°C Min	Subgroup 3 Max	Unit
I_{IH}	3010	49						5.5 V	I_0		50		50		50	μA
		50						"	I_1		20		20		20	"
		51						"	I_2		"		"		"	"
		52						"	I_3		"		"		"	"
		53						"	I_4		"		"		"	"
		54						"	I_5		"		"		"	"
		55						"	I_6		"		"		"	"
		56						"	I_7		"		"		"	"
		57						"	I_8		"		"		"	"
		58						"	I_9		50		50		50	"
I_I		59						"	I_0		0.2		0.2		0.2	mA
		60						"	I_1		0.1		0.1		0.1	"
		61						"	I_2		"		"		"	"
		62						"	I_3		"		"		"	"
		63						"	I_4		"		"		"	"
		64						"	I_5		"		"		"	"
		65						"	I_6		"		"		"	"
		66						"	I_7		"		"		"	"
		67						"	I_8		"		"		"	"
		68						"	I_9		0.2		0.2		0.2	"
		69						"	I/O_1		0.1		0.1		0.1	"
		70						"	I/O_2		"		"		"	"
		71	5.5 V					"	I/O_3		"		"		"	"
		72		5.5 V				"	I/O_4		"		"		"	"
		73			5.5 V			"	I/O_5		"		"		"	"
		74				5.5 V		"	I/O_6		"		"		"	"
I_O		75						"	O_0	-15	-125	-15	-125	-15	-125	"
		76						"	I/O_1	"	"	"	"	"	"	"
		77						"	I/O_2	"	"	"	"	"	"	"
		78	2.25 V					"	I/O_3	"	"	"	"	"	"	"
		79		2.25 V				"	I/O_4	"	"	"	"	"	"	"
		80			2.25 V			"	I/O_5	"	"	"	"	"	"	"
		81				2.25 V		"	I/O_6	"	"	"	"	"	"	"
		82					2.25 V	"	O_7	"	"	"	"	"	"	"
I_{OZH}		83						"	O_0		20		20		20	μA
		84						"	I/O_1		100		100		100	"
		85						"	I/O_2		"		"		"	"
		86	2.7 V					"	I/O_3		"		"		"	"
		87		2.7 V				"	I/O_4		"		"		"	"
		88			2.7 V			"	I/O_5		"		"		"	"
		89				2.7 V		"	I/O_6		"		"		"	"
		90					2.7 V	"	O_7		20		20		20	"
I_{OZL}		91						"	O_0		-20		-20		-20	"
		92					0.4 V	"	O_7		-20		-20		-20	"
I_{CC}	3005	93						"	V_{CC}		190		190		190	mA

TABLE III. Group A inspection for device type 01 - Continued.
Terminal conditions (pins not designated may be high ≥ 2.0 V, low ≤ 0.8 V, or open).

Symbol	MIL-STD-883 method	Cases R, 2	1	2	3	4	5	6	7	8	9	10	11	12	13	14
		Test no.	I_0	I_1	I_2	I_3	I_4	I_5	I_6	I_7	I_8	GND	I_9	O_0	I/O_1	I/O_2
Functional tests	3014	94	2/	2/	2/	2/	2/	2/	2/	2/	2/	GND	2/	2/	2/	2/
t_{PHL}	3003	95	3/	3/	3/	3/	3/	3/	3/	3/	3/	GND	3/	4/ 5/	4/ 5/	4/ 5/
t_{PLH}		96	"	"	"	"	"	"	"	"	"	"	"	"	"	"
t_{PZH}		97	"	"	"	"	"	"	"	"	"	"	"	"	"	"
t_{PZL}		98	"	"	"	"	"	"	"	"	"	"	"	"	"	"
t_{PHZ}		99	"	"	"	"	"	"	"	"	"	"	"	"	"	"
t_{PLZ}		100	"	"	"	"	"	"	"	"	"	"	"	"	"	"

See footnotes at end of table.

TABLE III. Group A inspection for device type 01 - Continued.
Terminal conditions (pins not designated may be high ≥ 2.0 V, low ≤ 0.3 V, or open).

Symbol	MIL-STD-883 method	Cases R, 2	15	16	17	18	19	20	Measured terminals	Test limits: Subgroup 7 T_C = +25°C		Subgroup 8 T_C = +125°C		Subgroup 8 T_C = -55°C		Unit
		Test no.	I/O_3	I/O_4	I/O_5	I/O_6	O_7	V_{CC}		Min	Max	Min	Max	Min	Max	
Functional tests	3014	94	2/	2/	2/	2/	2/	5.5 V	All outputs		2/		2/		2/	
										Subgroup 9 T_C = +25°C		Subgroup 10 T_C = +125°C		Subgroup 11 T_C = -55°C		
										Min	Max	Min	Max	Min	Max	
t_{PHL}	3003	95	4/ 5/	4/ 5/	4/ 5/	4/ 5/	4/ 5/	3/	All outputs		20		20		20	ns
t_{PLH}		96	"	"	"	"	"	"	"		"		"		"	"
t_{PZH}		97	"	"	"	"	"	"	"		"		"		"	"
t_{PZL}		98	"	"	"	"	"	"	"		"		"		"	"
t_{PHZ}		99	"	"	"	"	"	"	"		"		"		"	"
t_{PLZ}		100	"	"	"	"	"	"	"		"		"		"	"

TABLE III. Group A inspection for device type 02.
Terminal conditions (pins not designated may be high ≥ 2.0 V, low ≤ 0.8 V, or open).

Symbol	MIL-STD-883 method	Cases R, 2 Test no.	1 CLK	2 I_0	3 I_1	4 I_2	5 I_3	6 I_4	7 I_5	8 I_6	9 I_7	10 GND	11 $\overline{OE}$	12 O_0	13 O_1	14 O_2
V_{IC}		1	-18 mA									GND				
		2		-18 mA								"				
		3			-18 mA							"				
		4				-18 mA						"				
		5					-18 mA					"				
		6						-18 mA				"				
		7							-18 mA			"				
		8								-18 mA		"				
		9									-18 mA	"				
		10										"	-18 mA			
V_{OL}	3007	11	1/	1/	1/	1/	1/	1/	1/	1/	1/	"	1/ 6/	12 mA		
		12	"	"	"	"	"	"	"	"	"	"	"		12 mA	
		13	"	"	"	"	"	"	"	"	"	"	"			12 mA
		14	"	"	"	"	"	"	"	"	"	"	"			
		15	"	"	"	"	"	"	"	"	"	"	"			
		16	"	"	"	"	"	"	"	"	"	"	"			
		17	"	"	"	"	"	"	"	"	"	"	"			
		18	"	"	"	"	"	"	"	"	"	"	"			
V_{OH}	3006	19	"	"	"	"	"	"	"	"	"	"	"	-2 mA		
		20	"	"	"	"	"	"	"	"	"	"	"		-2 mA	
		21	"	"	"	"	"	"	"	"	"	"	"			-2 mA
		22	"	"	"	"	"	"	"	"	"	"	"			
		23	"	"	"	"	"	"	"	"	"	"	"			
		24	"	"	"	"	"	"	"	"	"	"	"			
		25	"	"	"	"	"	"	"	"	"	"	"			
		26	"	"	"	"	"	"	"	"	"	"	"			
I_{IL}	3009	27	0.4 V									"				
		28		0.4 V								"				
		29			0.4 V							"				
		30				0.4 V						"				
		31					0.4 V					"				
		32						0.4 V				"				
		33							0.4 V			"				
		34								0.4 V		"				
		35									0.4 V	"				
		36										"	0.4 V			

See footnotes at end of table.

TABLE III. Group A inspection for device type 02 - Continued.
Terminal conditions (pins not designated may be high ≥ 2.0 V, low ≤ 0.8 V, or open).

Symbol	MIL-STD-883 method	Cases R, 2 Test no.	15 O_3	16 O_4	17 O_5	18 O_6	19 O_7	20 V_{CC}	Measured terminals	Test limits: Subgroup 1 T_C = +25°C Min	Subgroup 1 Max	Subgroup 2 T_C = +125°C Min	Subgroup 2 Max	Subgroup 3 T_C = -55°C Min	Subgroup 3 Max	Unit
V_{IC}		1						4.5 V	CLOCK		-1.5		-1.5		-1.5	V
		2						"	I_0		"		"		"	"
		3						"	I_1		"		"		"	"
		4						"	I_2		"		"		"	"
		5						"	I_3		"		"		"	"
		6						"	I_4		"		"		"	"
		7						"	I_5		"		"		"	"
		8						"	I_6		"		"		"	"
		9						"	I_7		"		"		"	"
		10						"	$\overline{OE}$		"		"		"	"
V_{OL}	3007	11						"	O_0		0.5		0.5		0.5	"
		12						"	O_1		"		"		"	"
		13						"	O_2		"		"		"	"
		14	12 mA					"	O_3		"		"		"	"
		15		12 mA				"	O_4		"		"		"	"
		16			12 mA			"	O_5		"		"		"	"
		17				12 mA		"	O_6		"		"		"	"
		18					12 mA	"	O_7		"		"		"	"
V_{OH}	3006	19						"	O_0	2.4		2.4		2.4		"
		20						"	O_1	"		"		"		"
		21						"	O_2	"		"		"		"
		22	-2 mA					"	O_3	"		"		"		"
		23		-2 mA				"	O_4	"		"		"		"
		24			-2 mA			"	O_5	"		"		"		"
		25				-2 mA		"	O_6	"		"		"		"
		26					-2 mA	"	O_7	"		"		"		"
I_{IL}	3009	27						5.5 V	CLOCK		-0.25		-0.25		-0.25	mA
		28						"	I_0		"		"		"	"
		29						"	I_1		"		"		"	"
		30						"	I_2		"		"		"	"
		31						"	I_3		"		"		"	"
		32						"	I_4		"		"		"	"
		33						"	I_5		"		"		"	"
		34						"	I_6		"		"		"	"
		35						"	I_7		"		"		"	"
		36						"	$\overline{OE}$		"		"		"	"

TABLE III. Group A inspection for device type 02 - Continued.
Terminal conditions (pins not designated may be high ≥ 2.0 V, low ≤ 0.8 V, or open).

Symbol	MIL-STD-883 method	Cases R, 2 Test no.	1 CLK	2 I_0	3 I_1	4 I_2	5 I_3	6 I_4	7 I_5	8 I_6	9 I_7	10 GND	11 $\overline{OE}$	12 O_0	13 O_1	14 O_2
I_{IH}	3010	37	2.7 V									GND				
		38		2.7 V								"				
		39			2.7 V							"				
		40				2.7 V						"				
		41					2.7 V					"				
		42						2.7 V				"				
		43							2.7 V			"				
		44								2.7 V		"				
		45									2.7 V	"				
		46										"	2.7 V			
I_I		47	5.5 V									"				
		48		5.5 V								"				
		49			5.5 V							"				
		50				5.5 V						"				
		51					5.5 V					"				
		52						5.5 V				"				
		53							5.5 V			"				
		54								5.5 V		"				
		55									5.5 V	"				
		56										"	5.5 V			
I_O		57	1/	1/	1/	1/	1/	1/	1/	1/	1/	"	1/ 6/	2.25 V		
		58	"	"	"	"	"	"	"	"	"	"	"		2.25 V	
		59	"	"	"	"	"	"	"	"	"	"	"			2.25 V
		60	"	"	"	"	"	"	"	"	"	"	"			
		61	"	"	"	"	"	"	"	"	"	"	"			
		62	"	"	"	"	"	"	"	"	"	"	"			
		63	"	"	"	"	"	"	"	"	"	"	"			
		64	"	"	"	"	"	"	"	"	"	"	"			
I_{OZH}		65	"	"	"	"	"	"	"	"	"	"	1/ 7/	2.7 V		
		66	"	"	"	"	"	"	"	"	"	"	"		2.7 V	
		67	"	"	"	"	"	"	"	"	"	"	"			2.7 V
		68	"	"	"	"	"	"	"	"	"	"	"			
		69	"	"	"	"	"	"	"	"	"	"	"			
		70	"	"	"	"	"	"	"	"	"	"	"			
		71	"	"	"	"	"	"	"	"	"	"	"			
		72	"	"	"	"	"	"	"	"	"	"	"			
I_{OZL}		73	"	"	"	"	"	"	"	"	"	"	"	0.4 V		
		74	"	"	"	"	"	"	"	"	"	"	"		0.4 V	
		75	"	"	"	"	"	"	"	"	"	"	"			0.4 V
		76	"	"	"	"	"	"	"	"	"	"	"			
		77	"	"	"	"	"	"	"	"	"	"	"			
		78	"	"	"	"	"	"	"	"	"	"	"			
		79	"	"	"	"	"	"	"	"	"	"	"			
		80	"	"	"	"	"	"	"	"	"	"	"			
I_{CC}	3005	81										"				

See footnotes at end of table.

TABLE III. Group A inspection for device type 02 - Continued.
Terminal conditions (pins not designated may be high ≥ 2.0 V, low ≤ 0.8 V, or open).

Symbol	MIL-STD-883 method	Cases R, 2 Test no.	15 O_3	16 O_4	17 O_5	18 O_6	19 O_7	20 V_{CC}	Measured terminals	Test limits: Subgroup 1 T_C = +25°C Min	Subgroup 1 Max	Subgroup 2 T_C = +125°C Min	Subgroup 2 Max	Subgroup 3 T_C = -55°C Min	Subgroup 3 Max	Unit
I_{IH}	3010	37						5.5 V	CLOCK		50		50		50	μA
		38						"	I_0		20		20		20	"
		39						"	I_1		"		"		"	"
		40						"	I_2		"		"		"	"
		41						"	I_3		"		"		"	"
		42						"	I_4		"		"		"	"
		43						"	I_5		"		"		"	"
		44						"	I_6		"		"		"	"
		45						"	I_7		"		"		"	"
		46						"	$\overline{OE}$		50		50		50	"
I_I		47						"	CLOCK		0.2		0.2		0.2	mA
		48						"	I_0		0.1		0.1		0.1	"
		49						"	I_1		"		"		"	"
		50						"	I_2		"		"		"	"
		51						"	I_3		"		"		"	"
		52						"	I_4		"		"		"	"
		53						"	I_5		"		"		"	"
		54						"	I_6		"		"		"	"
		55						"	I_7		"		"		"	"
		56						"	$\overline{OE}$		0.2		0.2		0.2	"
I_O		57						"	O_0	-15	-125	-15	-125	-15	-125	"
		58						"	O_1	"	"	"	"	"	"	"
		59						"	O_2	"	"	"	"	"	"	"
		60	2.25 V					"	O_3	"	"	"	"	"	"	"
		61		2.25 V				"	O_4	"	"	"	"	"	"	"
		62			2.25 V			"	O_5	"	"	"	"	"	"	"
		63				2.25 V		"	O_6	"	"	"	"	"	"	"
		64					2.25 V	"	O_7	"	"	"	"	"	"	"
I_{OZH}		65						"	O_0		20		20		20	μA
		66						"	O_1		"		"		"	"
		67						"	O_2		"		"		"	"
		68	2.7 V					"	O_3		"		"		"	"
		69		2.7 V				"	O_4		"		"		"	"
		70			2.7 V			"	O_5		"		"		"	"
		71				2.7 V		"	O_6		"		"		"	"
		72					2.7 V	"	O_7		"		"		"	"
I_{OZL}		73						"	O_0		-20		-20		-20	"
		74						"	O_1		"		"		"	"
		75						"	O_2		"		"		"	"
		76	0.4 V					"	O_3		"		"		"	"
		77		0.4 V				"	O_4		"		"		"	"
		78			0.4 V			"	O_5		"		"		"	"
		79				0.4 V		"	O_6		"		"		"	"
		80					0.4 V	"	O_7		"		"		"	"
I_{CC}	3005	81						"	V_{CC}		190		190		190	mA

TABLE III. Group A inspection for device type 02 - Continued.
Terminal conditions (pins not designated may be high ≥ 2.0 V, low ≤ 0.8 V, or open).

Symbol	MIL-STD-383 method	Cases R, 2 Test no.	1 CLK	2 I_0	3 I_1	4 I_2	5 I_3	6 I_4	7 I_5	8 I_6	9 I_7	10 GND	11 $\overline{OE}$	12 O_0	13 O_1	14 O_2
Functional tests	3014	82	2/	2/	2/	2/	2/	2/	2/	2/	2/	GND	2/	2/	2/	2/
t_{SJ} 10/	3003	83	3/	3/	3/	3/	3/	3/	3/	3/	3/	GND	6/	4/ 8/	4/ 8/	4/ 8/
$t_{P(CL)}$ 10/		84	"	"	"	"	"	"	"	"	"	"	"	"	"	"
t_{PCH}		85	"	"	"	"	"	"	"	"	"	"	"	"	"	"
t_{PCL}		86	"	"	"	"	"	"	"	"	"	"	"	"	"	"
t_{PZH}		87	"	"	"	"	"	"	"	"	"	"	3/	"	"	"
t_{PZL}		88	"	"	"	"	"	"	"	"	"	"	"	"	"	"
t_{PHZ}		89	"	"	"	"	"	"	"	"	"	"	"	"	"	"
t_{PLZ}		90	"	"	"	"	"	"	"	"	"	"	"	"	"	"
f_{MAX}		91	9/	9/	9/	9/	9/	9/	9/	9/	9/	"	6/	9/	9/	9/

See footnotes at end of table.

TABLE III. Group A inspection for device type 02 - Continued.
Terminal conditions (pins not designated may be high ≥ 2.0 V, low ≤ 0.8 V, or open).

Symbol	MIL-STD-883 method	Cases R, 2 Test no.	15 O_3	16 O_4	17 O_5	18 O_6	19 O_7	20 V_{CC}	Measured terminals	Test limits: Subgroup 7 T_C = +25°C Min	Subgroup 7 Max	Subgroup 8 T_C = +125°C Min	Subgroup 8 Max	Subgroup 8 T_C = -55°C Min	Subgroup 8 Max	Unit
Functional tests	3014	82	2/	2/	2/	2/	2/	5.5 V	All outputs		2/		2/		2/	
										Subgroup 9 T_C = +25°C Min	Subgroup 9 Max	Subgroup 10 T_C = +125°C Min	Subgroup 10 Max	Subgroup 11 T_C = -55°C Min	Subgroup 11 Max	
t_{SL} 10/	3003	83		4/ 8/	4/ 8/	4/ 8/	4/ 8/	4/ 8/	3/ register outputs	All	20		20		20	
$t_{P(CL)}$ 10/		84	"	"	"	"	"	"	"	12		12		12		"
t_{PCH}		85	"	"	"	"	"	"	"		15		15		15	"
t_{PCL}		86	"	"	"	"	"	"	"		"		"		"	"
t_{PZH}		87	"	"	"	"	"	"	"		"		"		"	"
t_{PZL}		88	"	"	"	"	"	"	"		"		"		"	"
t_{PHZ}		89	"	"	"	"	"	"	"		"		"		"	"
t_{PLZ}		90	"	"	"	"	"	"	"		"		"		"	"
f_{MAX}		91	9/	9/	9/	9/	9/	4.5 V	"	40		40		40		MHz

TABLE III. Group A inspection for device type 03.
Terminal conditions (pins not designated may be high ≥ 2.0 V, low ≤ 0.8 V, or open).

Symbol	MIL-STD-883 method	Cases R, 2	1	2	3	4	5	6	7	8	9	10	11	12	13	14
		Test no.	CLK	I_0	I_1	I_2	I_3	I_4	I_5	I_6	I_7	GND	$\overline{OE}$	I/O_0	O_1	O_2
V_{IC}		1	-18 mA									GND				
		2		-18 mA								"				
		3			-18 mA							"				
		4				-18 mA						"				
		5					-18 mA					"				
		6						-18 mA				"				
		7							-18 mA			"				
		8								-18 mA		"				
		9									-18 mA	"				
		10										"	-18 mA			
		11										"		-18 nA		
		12										"				
V_{OL}	3007	13	1/	1/	1/	1/	1/	1/	1/	1/	1/	"	1/ 6/	12 nA		
		14	"	"	"	"	"	"	"	"	"	"	"		12 mA	
		15	"	"	"	"	"	"	"	"	"	"	"			12 mA
		16	"	"	"	"	"	"	"	"	"	"	"			
		17	"	"	"	"	"	"	"	"	"	"	"			
		18	"	"	"	"	"	"	"	"	"	"	"			
		19	"	"	"	"	"	"	"	"	"	"	"			
		20	"	"	"	"	"	"	"	"	"	"	"			
V_{OH}	3006	21	"	"	"	"	"	"	"	"	"	"	"	-2 nA		
		22	"	"	"	"	"	"	"	"	"	"	"		-2 mA	
		23	"	"	"	"	"	"	"	"	"	"	"			-2 mA
		24	"	"	"	"	"	"	"	"	"	"	"			
		25	"	"	"	"	"	"	"	"	"	"	"			
		26	"	"	"	"	"	"	"	"	"	"	"			
		27	"	"	"	"	"	"	"	"	"	"	"			
		28	"	"	"	"	"	"	"	"	"	"	"			
I_{IL}	3009	29	0.4 V									"				
		30		0.4 V								"				
		31			0.4 V							"				
		32				0.4 V						"				
		33					0.4 V					"				
		34						0.4 V				"				
		35							0.4 V			"				
		36								0.4 V		"				
		37									0.4 V	"				
		38										"	0.4 V			
		39										"		0.4 V		
		40										"				

See footnotes at end of table.

TABLE III. Group A inspection for device type 03 - Continued.
Terminal conditions (pins not designated may be high ≥ 2.0 V, low ≤ 0.8 V, or open).

Symbol	MIL-STD-883 method	Cases R, 2 Test no.	15 O_3	16 O_4	17 O_5	18 O_6	19 I/O_7	20 V_{CC}	Measured terminals	Test limits: Subgroup 1 T_C = +25°C Min	Subgroup 1 Max	Subgroup 2 T_C = +125°C Min	Subgroup 2 Max	Subgroup 3 T_C = -55°C Min	Subgroup 3 Max	Unit
V_{IC}		1						4.5 V	CLOCK		-1.5		-1.5		-1.5	V
		2						"	I_0		"		"		"	"
		3						"	I_1		"		"		"	"
		4						"	I_2		"		"		"	"
		5						"	I_3		"		"		"	"
		6						"	I_4		"		"		"	"
		7						"	I_5		"		"		"	"
		8						"	I_6		"		"		"	"
		9						"	I_7		"		"		"	"
		10						"	$\overline{OE}$		"		"		"	"
		11						"	I/O_0		"		"		"	"
		12					-18 mA	"	I/O_7		"		"		"	"
V_{OL}	3007	13						"	I/O_0		0.5		0.5		0.5	"
		14						"	O_1		"		"		"	"
		15						"	O_2		"		"		"	"
		16	12 mA					"	O_3		"		"		"	"
		17		12 mA				"	O_4		"		"		"	"
		18			12 mA			"	O_5		"		"		"	"
		19				12 mA		"	O_6		"		"		"	"
		20					12 mA	"	I/O_7		"		"		"	"
V_{OH}	3006	21						"	I/O_0	2.4		2.4		2.4		"
		22						"	O_1	"		"		"		"
		23						"	O_2	"		"		"		"
		24	-2 mA					"	O_3	"		"		"		"
		25		-2 mA				"	O_4	"		"		"		"
		26			-2 mA			"	O_5	"		"		"		"
		27				-2 mA		"	O_6	"		"		"		"
		28					-2 mA	"	I/O_7	"		"		"		"
I_{IL}	3009	29						5.5 V	CLOCK		-0.25		-0.25		-0.25	mA
		30						"	I_0		"		"		"	"
		31						"	I_1		"		"		"	"
		32						"	I_2		"		"		"	"
		33						"	I_3		"		"		"	"
		34						"	I_4		"		"		"	"
		35						"	I_5		"		"		"	"
		36						"	I_6		"		"		"	"
		37						"	I_7		"		"		"	"
		38						"	$\overline{OE}$		"		"		"	"
		39						"	I/O_0		"		"		"	"
		40					0.4 V	"	I/O_7		"		"		"	"

TABLE III. Group A inspection for device type 03 - Continued.
Terminal conditions (pins not designated may be high ≥ 2.0 V, low ≤ 0.8 V, or open).

Symbol	MIL-STD-883 method	Cases R, 2 Test no.	1 CLK	2 I_0	3 I_1	4 I_2	5 I_3	6 I_4	7 I_5	8 I_6	9 I_7	10 GND	11 $\overline{OE}$	12 I/O_0	13 O_1	14 O_2
I_{IH}	3010	41	2.7 V									GND				
		42		2.7 V								"				
		43			2.7 V							"				
		44				2.7 V						"				
		45					2.7 V					"				
		46						2.7 V				"				
		47							2.7 V			"				
		48								2.7 V		"				
		49									2.7 V	"				
		50										"	2.7 V			
I_I		51	5.5 V									"				
		52		5.5 V								"				
		53			5.5 V							"				
		54				5.5 V						"				
		55					5.5 V					"				
		56						5.5 V				"				
		57							5.5 V			"				
		58								5.5 V		"				
		59									5.5 V	"				
		60										"	5.5 V			
		61										"		5.5 V		
		62										"				
I_O		63	1/	1/	1/	1/	1/	1/	1/	1/	1/	"	1/ 6/	2.25 V		
		64	"	"	"	"	"	"	"	"	"	"	"		2.25 V	
		65	"	"	"	"	"	"	"	"	"	"	"			2.25 V
		66	"	"	"	"	"	"	"	"	"	"	"			
		67	"	"	"	"	"	"	"	"	"	"	"			
		68	"	"	"	"	"	"	"	"	"	"	"			
		69	"	"	"	"	"	"	"	"	"	"	"			
		70	"	"	"	"	"	"	"	"	"	"	"			
I_{OZH}		71	"	"	"	"	"	"	"	"	"	"	1/ 7/	2.7 V		
		72	"	"	"	"	"	"	"	"	"	"	"		2.7 V	
		73	"	"	"	"	"	"	"	"	"	"	"			2.7 V
		74	"	"	"	"	"	"	"	"	"	"	"			
		75	"	"	"	"	"	"	"	"	"	"	"			
		76	"	"	"	"	"	"	"	"	"	"	"			
		77	"	"	"	"	"	"	"	"	"	"	"			
		78	"	"	"	"	"	"	"	"	"	"	"			
I_{OZL}		79	"	"	"	"	"	"	"	"	"	"	"			
		80	"	"	"	"	"	"	"	"	"	"	"		0.4 V	
		81	"	"	"	"	"	"	"	"	"	"	"			0.4 V
		82	"	"	"	"	"	"	"	"	"	"	"			
		83	"	"	"	"	"	"	"	"	"	"	"			
		84	"	"	"	"	"	"	"	"	"	"	"			
I_{CC}	3005	85										"				

See footnotes at end of table.

TABLE III. Group A inspection for device type 03 - Continued.
Terminal conditions (pins not designated may be high ≥ 2.0 V, low ≤ 0.8 V, or open).

Symbol	MIL-STD-883 method	Cases R, 2 Test no.	15 O_3	16 O_4	17 O_5	18 O_6	19 I/O_7	20 V_{CC}	Measured terminals	Test limits: Subgroup 1 T_C = +25°C Min	Subgroup 1 Max	Subgroup 2 T_C = +125°C Min	Subgroup 2 Max	Subgroup 3 T_C = -55°C Min	Subgroup 3 Max	Unit
I_{IH}	3010	41						5.5 V	CLOCK		50		50		50	μA
		42						"	I_0		20		20		20	"
		43						"	I_1		"		"		"	"
		44						"	I_2		"		"		"	"
		45						"	I_3		"		"		"	"
		46						"	I_4		"		"		"	"
		47						"	I_5		"		"		"	"
		48						"	I_6		"		"		"	"
		49						"	I_7		"		"		"	"
		50						"	$\overline{OE}$		50		50		50	"
I_I		51						"	CLOCK		0.2		0.2		0.2	mA
		52						"	I_0		0.1		0.1		0.1	"
		53						"	I_1		"		"		"	"
		54						"	I_2		"		"		"	"
		55						"	I_3		"		"		"	"
		56						"	I_4		"		"		"	"
		57						"	I_5		"		"		"	"
		58						"	I_6		"		"		"	"
		59						"	I_7		"		"		"	"
		60						"	$\overline{OE}$		0.2		0.2		0.2	"
		61						"	I/O_0		0.1		0.1		0.1	"
		62					5.5 V	"	I/O_7		0.1		0.1		0.1	"
I_O		63						"	I/O_0	-15	-125	-15	-125	-15	-125	"
		64						"	O_1	"	"	"	"	"	"	"
		65						"	O_2	"	"	"	"	"	"	"
		66	2.25 V					"	O_3	"	"	"	"	"	"	"
		67		2.25 V				"	O_4	"	"	"	"	"	"	"
		68			2.25 V			"	O_5	"	"	"	"	"	"	"
		69				2.25 V		"	O_6	"	"	"	"	"	"	"
		70					2.25 V	"	I/O_7	"	"	"	"	"	"	"
I_{OZH}		71						"	I/O_0		100		100		100	μA
		72						"	O_1		20		20		20	"
		73						"	O_2		"		"		"	"
		74	2.7 V					"	O_3		"		"		"	"
		75		2.7 V				"	O_4		"		"		"	"
		76			2.7 V			"	O_5		"		"		"	"
		77				2.7 V		"	O_6		"		"		"	"
		78					2.7 V	"	I/O_7		100		100		100	"
I_{OZL}		79						"	O_1		-20		-20		-20	"
		80						"	O_2		"		"		"	"
		81	0.4 V					"	O_3		"		"		"	"
		82		0.4 V				"	O_4		"		"		"	"
		83			0.4 V			"	O_5		"		"		"	"
		84				0.4 V		"	O_6		"		"		"	"
I_{CC}	3005	85						"	V_{CC}		190		190		190	mA

TABLE III. Group A inspection for device type 03 - Continued.
Terminal conditions (pins not designated may be high $\geq$ 2.0 V, low $\leq$ 0.8 V, or open).

Symbol	MIL-STD-883 method	Cases R, 2 Test no.	1 CLK	2 I_0	3 I_1	4 I_2	5 I_3	6 I_4	7 I_5	8 I_6	9 I_7	10 GND	11 $\overline{OE}$	12 I/O_0	13 O_1	14 O_2
Functional tests	3014	86	2/	2/	2/	2/	2/	2/	2/	2/	2/	GND	2/	2/	2/	2/
t_{SU} 10/	3003	87	3/	3/	3/	3/	3/	3/	3/	3/	3/	GND	6/		4/ 8/	4/ 8/
$t_{P(CL)}$ 10/		88	"	"	"	"	"	"	"	"	"	"	"		"	"
t_{PCL}		89	"	"	"	"	"	"	"	"	"	"	"		"	"
t_{PCH}		90	"	"	"	"	"	"	"	"	"	"	"		"	"
t_{PHL}		91	"	"	"	"	"	"	"	"	"	"		4/ 5/		
t_{PLH}		92	"	"	"	"	"	"	"	"	"	"		4/ 5/		
t_{PZH}		93	"	"	"	"	"	"	"	"	"	"	3/		4/ 8/	4/ 8/
t_{PZL}		94	"	"	"	"	"	"	"	"	"	"	"		"	"
t_{PHZ}		95	"	"	"	"	"	"	"	"	"	"	"		"	"
t_{PLZ}		96	"	"	"	"	"	"	"	"	"	"	"		"	"
t_{PZH}		97	"	"	"	"	"	"	"	"	"	"		4/ 5/		
t_{PZL}		98	"	"	"	"	"	"	"	"	"	"		"		
t_{PHZ}		99	"	"	"	"	"	"	"	"	"	"		"		
t_{PLZ}		100	"	"	"	"	"	"	"	"	"	"		"		
f_{MAX}		101	9/	9/	9/	9/	9/	9/	9/	9/	9/	"	6/		9/	9/

See footnotes at end of table.

TABLE III. Group A inspection for device type 03 - Continued.
Terminal conditions (pins not designated may be high ≥ 2.0 V, low ≤ 0.8 V, or open).

Symbol	MIL-STD-883 method	Cases R, 2 Test no.	15 O_3	16 O_4	17 O_5	18 O_6	19 I/O_7	20 V_{CC}	Measured terminals	Test limits: Subgroup 7 T_C = +25°C Min	Subgroup 7 T_C = +25°C Max	Subgroup 8 T_C = +125°C Min	Subgroup 8 T_C = +125°C Max	Subgroup 8 T_C = -55°C Min	Subgroup 8 T_C = -55°C Max	Unit
Func-tional tests	3014	86	2/	2/	2/	2/	2/	5.5 V	All outputs		2/		2/		2/	
										Subgroup 9 T_C = +25°C Min	Subgroup 9 T_C = +25°C Max	Subgroup 10 T_C = +125°C Min	Subgroup 10 T_C = +125°C Max	Subgroup 11 T_C = -55°C Min	Subgroup 11 T_C = -55°C Max	
t_{SU} 10/	3003	87	4/ 8/	4/ 8/	4/ 8/	4/ 8/		3/	All register outputs	20		20		20		ns
$t_{P(CL)}$ 10/		88	"	"	"	"		"	"	12		12		12		"
t_{PCL}		89	"	"	"	"		"	"		15		15		15	"
t_{PCH}		90	"	"	"	"		"	"		15		15		15	"
t_{PHL}		91					4/ 5/	"	All I/O's		20		20		20	"
t_{PLH}		92					4/ 5/	"	All I/O's		20		20		20	"
t_{PZH}		93	4/ 8/	4/ 8/	4/ 8/	4/ 8/		"	All register outputs		15		15		15	"
t_{PZL}		94	"	"	"	"		"	"		"		"		"	"
t_{PHZ}		95	"	"	"	"		"	"		"		"		"	"
t_{PLZ}		96	"	"	"	"		"	"		"		"		"	"
t_{PZH}		97					4/ 5/	"	All I/O's		20		20		20	"
t_{PZL}		98					"	"	"		"		"		"	"
t_{PHZ}		99					"	"	"		"		"		"	"
t_{PLZ}		100					"	"	"		"		"		"	"
f_{MAX}		101	9/	9/	9/	9/		4.5 V	All register outputs	40		40		40		MHz

TABLE III. Group A inspection for device type 04.
Terminal conditions (pins not designated may be high ≥ 2.0 V, low ≤ 0.8 V, or open).

Symbol	MIL-STD-883 method	Cases R, 2 Test no.	1 CLK	2 I_0	3 I_1	4 I_2	5 I_3	6 I_4	7 I_5	8 I_6	9 I_7	10 GND	11 $\overline{OE}$	12 I/O_0	13 I/O_1	14 O_2
V_{IC}		1	-18 mA									GND				
		2		-18 mA								"				
		3			-18 mA							"				
		4				-18 mA						"				
		5					-18 mA					"				
		6						-18 mA				"				
		7							-18 mA			"				
		8								-18 mA		"				
		9									-18 mA	"				
		10										"	-18 mA			
		11										"		-18 mA		
		12										"			-18 mA	
		13										"				
		14										"				
V_{OL}	3007	15	1/	1/	1/	1/	1/	1/	1/	1/	1/	"	1/ 6/	12 mA		
		16	"	"	"	"	"	"	"	"	"	"	"		12 mA	
		17	"	"	"	"	"	"	"	"	"	"	"			12 mA
		18	"	"	"	"	"	"	"	"	"	"	"			
		19	"	"	"	"	"	"	"	"	"	"	"			
		20	"	"	"	"	"	"	"	"	"	"	"			
		21	"	"	"	"	"	"	"	"	"	"	"			
		22	"	"	"	"	"	"	"	"	"	"	"			
V_{OH}	3006	23	"	"	"	"	"	"	"	"	"	"	"	-2 mA		
		24	"	"	"	"	"	"	"	"	"	"	"		-2 mA	
		25	"	"	"	"	"	"	"	"	"	"	"			-2 mA
		26	"	"	"	"	"	"	"	"	"	"	"			
		27	"	"	"	"	"	"	"	"	"	"	"			
		28	"	"	"	"	"	"	"	"	"	"	"			
		29	"	"	"	"	"	"	"	"	"	"	"			
		30	"	"	"	"	"	"	"	"	"	"	"			
I_{IL}	3009	31	0.4 V									"				
		32		0.4 V								"				
		33			0.4 V							"				
		34				0.4 V						"				
		35					0.4 V					"				
		36						0.4 V				"				
		37							0.4 V			"				
		38								0.4 V		"				
		39									0.4 V	"				
		40										"	0.4 V			
		41										"		0.4 V		
		42										"			0.4 V	
		43										"				0.4 V
		44										"				

See footnotes at end of table.

TABLE III. Group A inspection for device type 04 - Continued.
Terminal conditions (pins not designated may be high ≥ 2.0 V, low ≤ 0.8 V, or open).

Symbol	MIL-STD-883 method	Cases R, 2 Test no.	15 O_3	16 O_4	17 O_5	18 I/O_6	19 I/O_7	20 V_{CC}	Measured terminals	Test limits: Subgroup 1 T_C = +25°C Min	Subgroup 1 Max	Subgroup 2 T_C = +125°C Min	Subgroup 2 Max	Subgroup 3 T_C = -55°C Min	Subgroup 3 Max	Unit
V_{IC}		1						4.5 V	CLOCK		-1.5		-1.5		-1.5	V
		2						"	I_0		"		"		"	"
		3						"	I_1		"		"		"	"
		4						"	I_2		"		"		"	"
		5						"	I_3		"		"		"	"
		6						"	I_4		"		"		"	"
		7						"	I_5		"		"		"	"
		8						"	I_6		"		"		"	"
		9						"	I_7		"		"		"	"
		10						"	$\overline{OE}$		"		"		"	"
		11						"	I/O_0		"		"		"	"
		12						"	I/O_1		"		"		"	"
		13				-18 mA		"	I/O_6		"		"		"	"
		14					-18 mA	"	I/O_7		"		"		"	"
V_{OL}	3007	15						"	I/O_0		0.5		0.5		0.5	"
		16						"	I/O_1		"		"		"	"
		17						"	O_2		"		"		"	"
		18	12 mA					"	O_3		"		"		"	"
		19		12 mA				"	O_4		"		"		"	"
		20			12 mA			"	O_5		"		"		"	"
		21				12 mA		"	I/O_6		"		"		"	"
		22					12 mA	"	I/O_7		"		"		"	"
V_{OH}	3006	23						"	I/O_0	2.4		2.4		2.4		"
		24						"	I/O_1	"		"		"		"
		25						"	O_2	"		"		"		"
		26	-2 mA					"	O_3	"		"		"		"
		27		-2 mA				"	O_4	"		"		"		"
		28			-2 mA			"	O_5	"		"		"		"
		29				-2 mA		"	I/O_6	"		"		"		"
		30					-2 mA	"	I/O_7	"		"		"		"
I_{IL}	3009	31						5.5 V	CLOCK		-0.25		-0.25		-0.25	mA
		32						"	I_0		"		"		"	"
		33						"	I_1		"		"		"	"
		34						"	I_2		"		"		"	"
		35						"	I_3		"		"		"	"
		36						"	I_4		"		"		"	"
		37						"	I_5		"		"		"	"
		38						"	I_6		"		"		"	"
		39						"	I_7		"		"		"	"
		40						"	$\overline{OE}$		"		"		"	"
		41						"	I/O_0		"		"		"	"
		42						"	I/O_1		"		"		"	"
		43				0.4 V		"	I/O_6		"		"		"	"
		44					0.4 V	"	I/O_7		"		"		"	"

TABLE III. Group A inspection for device type 04 - Continued.
Terminal conditions (pins not designated may be high ≥ 2.0 V, low ≤ 0.8 V, or open).

Symbol	MIL-STD-883 method	Cases R, 2	1	2	3	4	5	6	7	8	9	10	11	12	13	14
		Test no.	CLK	I_0	I_1	I_2	I_3	I_4	I_5	I_6	I_7	GND	$\overline{OE}$	I/O_0	I/O_1	O_2
I_{IH}	3010	45	2.7 V									GND				
		46		2.7 V								"				
		47			2.7 V							"				
		48				2.7 V						"				
		49					2.7 V					"				
		50						2.7 V				"				
		51							2.7 V			"				
		52								2.7 V		"				
		53									2.7 V	"				
		54										"	2.7 V			
I_I		55	5.5 V									"				
		56		5.5 V								"				
		57			5.5 V							"				
		58				5.5 V						"				
		59					5.5 V					"				
		60						5.5 V				"				
		61							5.5 V			"				
		62								5.5 V		"				
		63									5.5 V	"				
		64										"	5.5 V			
		65										"		5.5 V		
		66										"				
		67										"				
		68										"				
I_O		69	1/ "	1/ "	1/ "	1/ "	1/ "	1/ "	1/ "	1/ "	1/ "	"	1/ 6/ "	2.25 V	2.25 V	2.25 V
		70	"	"	"	"	"	"	"	"	"	"	"			
		71	"	"	"	"	"	"	"	"	"	"	"			
		72	"	"	"	"	"	"	"	"	"	"	"			
		73	"	"	"	"	"	"	"	"	"	"	"			
		74	"	"	"	"	"	"	"	"	"	"	"			
		75	"	"	"	"	"	"	"	"	"	"	"			
		76	"	"	"	"	"	"	"	"	"	"	"			
I_{OZH}		77	"	"	"	"	"	"	"	"	"	"	1/ 7/ "	2.7 V	2.7 V	2.7 V
		78	"	"	"	"	"	"	"	"	"	"	"			
		79	"	"	"	"	"	"	"	"	"	"	"			
		80	"	"	"	"	"	"	"	"	"	"	"			
		81	"	"	"	"	"	"	"	"	"	"	"			
		82	"	"	"	"	"	"	"	"	"	"	"			
		83	"	"	"	"	"	"	"	"	"	"	"			
		84	"	"	"	"	"	"	"	"	"	"	"			
I_{OZL}		85	"	"	"	"	"	"	"	"	"	"	"			0.4 V
		86	"	"	"	"	"	"	"	"	"	"	"			
		87	"	"	"	"	"	"	"	"	"	"	"			
		88	"	"	"	"	"	"	"	"	"	"	"			
I_{CC}	3005	89										"				

See footnotes at end of table.

TABLE III. Group A inspection for device type 04 - Continued.
Terminal conditions (pins not designated may be high ≥ 2.0 V, low ≤ 0.3 V, or open).

Symbol	MIL-STD-883 method	Cases R, 2 Test no.	15 O_3	16 O_4	17 O_5	18 I/O_6	19 I/O_7	20 V_{CC}	Measured terminals	Test limits: Subgroup 1 T_C = +25°C Min	Subgroup 1 Max	Subgroup 2 T_C = +125°C Min	Subgroup 2 Max	Subgroup 3 T_C = -55°C Min	Subgroup 3 Max	Unit
I_{IH}	3010	45						5.5 V	CLOCK		50		50		50	μA
		46						"	I_0		20		20		20	"
		47						"	I_1		"		"		"	"
		48						"	I_2		"		"		"	"
		49						"	I_3		"		"		"	"
		50						"	I_4		"		"		"	"
		51						"	I_5		"		"		"	"
		52						"	I_6		"		"		"	"
		53						"	I_7		"		"		"	"
		54						"	$\overline{OE}$		50		50		50	"
I_I		55						"	CLOCK		0.2		0.2		0.2	mA
		56						"	I_0		0.1		0.1		0.1	"
		57						"	I_1		"		"		"	"
		58						"	I_2		"		"		"	"
		59						"	I_3		"		"		"	"
		60						"	I_4		"		"		"	"
		61						"	I_5		"		"		"	"
		62						"	I_6		"		"		"	"
		63						"	I_7		"		"		"	"
		64						"	$\overline{OE}$		0.2		0.2		0.2	"
		65						"	I/O_0		0.1		0.1		0.1	"
		66						"	I/O_1		"		"		"	"
		67				5.5 V		"	I/O_6		"		"		"	"
		68					5.5 V	"	I/O_7		"		"		"	"
I_O		69						"	I/O_0	-15	-125	-15	-125	-15	-125	"
		70						"	I/O_1	"	"	"	"	"	"	"
		71						"	O_2	"	"	"	"	"	"	"
		72	2.25 V					"	O_3	"	"	"	"	"	"	"
		73		2.25 V				"	O_4	"	"	"	"	"	"	"
		74			2.25 V			"	O_5	"	"	"	"	"	"	"
		75				2.25 V		"	I/O_6	"	"	"	"	"	"	"
		76					2.25 V	"	I/O_7	"	"	"	"	"	"	"
I_{OZH}		77						"	I/O_0		100		100		100	μA
		78						"	I/O_1		100		100		100	"
		79						"	O_2		20		20		20	"
		80	2.7 V					"	O_3		"		"		"	"
		81		2.7 V				"	O_4		"		"		"	"
		82			2.7 V			"	O_5		"		"		"	"
		83				2.7 V		"	I/O_6		100		100		100	"
		84					2.7 V	"	I/O_7		100		100		100	"
I_{OZL}		85						"	O_2		-20		-20		-20	"
		86	0.4 V					"	O_3		"		"		"	"
		87		0.4 V				"	O_4		"		"		"	"
		88			0.4 V			"	O_5		"		"		"	"
I_{CC}	3005	89						"	V_{CC}		190		190		190	mA

TABLE III. Group A inspection for device type 04 - Continued.
Terminal conditions (pins not designated may be high ≥ 2.0 V, low ≤ 0.8 V, or open).

Symbol	MIL-STD-883 method	Cases R, 2 Test no.	1 CLK	2 I_0	3 I_1	4 I_2	5 I_3	6 I_4	7 I_5	8 I_6	9 I_7	10 GND	11 $\overline{CE}$	12 I/O_0	13 I/O_1	14 O_2
Functional tests	3014	90	2/	2/	2/	2/	2/	2/	2/	2/	2/	GND	2/	2/	2/	2/
t_{SU} 10/	3003	91	3/	3/	3/	3/	3/	3/	3/	3/	3/	GND	6/			4/ 8/
$t_{P(CL)}$ 10/		92	"	"	"	"	"	"	"	"	"	"	"			"
t_{PCL}		93	"	"	"	"	"	"	"	"	"	"	"			"
t_{PCH}		94	"	"	"	"	"	"	"	"	"	"	"			"
t_{PHL}		95	"	"	"	"	"	"	"	"	"	"		4/ 5/	4/ 5/	
t_{PLH}		96	"	"	"	"	"	"	"	"	"	"		4/ 5/	4/ 5/	
t_{PZH}		97	"	"	"	"	"	"	"	"	"	"	3/			4/ 8/
t_{PZL}		98	"	"	"	"	"	"	"	"	"	"	"			"
t_{PHZ}		99	"	"	"	"	"	"	"	"	"	"	"			"
t_{PLZ}		100	"	"	"	"	"	"	"	"	"	"	"			"
t_{PZH}		101	"	"	"	"	"	"	"	"	"	"		4/ 5/	4/ 5/	
t_{PZL}		102	"	"	"	"	"	"	"	"	"	"		"	"	
t_{PHZ}		103	"	"	"	"	"	"	"	"	"	"		"	"	
t_{PLZ}		104	"	"	"	"	"	"	"	"	"	"		"	"	
f_{MAX}		105	9/	9/	9/	9/	9/	9/	9/	9/	9/	"	6/			9/

See footnotes at end of table.

TABLE III. Group A inspection for device type 04 - Continued.
Terminal conditions (pins not designated may be high ≥ 2.0 V, low ≤ 0.8 V, or open).

Symbol	MIL-STD-883 method	Cases R, 2 Test no.	15 O_3	16 O_4	17 O_5	18 I/O_6	19 I/O_7	20 V_{CC}	Measured terminals	Test limits: Subgroup 7 T_C = +25°C Min	Subgroup 7 Max	Subgroup 8 T_C = +125°C Min	Subgroup 8 Max	Subgroup 8 T_C = -55°C Min	Subgroup 8 Max	Unit
Functional tests	3014	90	2/	2/	2/	2/	2/	5.5 V	All outputs		2/		2/		2/	
										Subgroup 9 T_C = +25°C Min	Max	Subgroup 10 T_C = +125°C Min	Max	Subgroup 11 T_C = -55°C Min	Max	
t_{SU} 10/	3003	91	4/ 8/	4/ 8/	4/ 8/			3/	All register outputs	20		20		20		ns
$t_{P(CL)}$ 10/		92	"	"	"			"	"	12		12		12		"
t_{PCL}		93	"	"	"			"	"		15		15		15	"
t_{PCH}		94	"	"	"			"	"		15		15		15	"
t_{PHL}		95				4/ 5/	4/ 5/	"	All I/O's		20		20		20	"
t_{PLH}		96				4/ 5/	4/ 5/	"	All I/O's		20		20		20	"
t_{PZH}		97	4/ 8/	4/ 8/	4/ 8/			"	All register outputs		15		15		15	"
t_{PZL}		98	"	"	"			"	"		"		"		"	"
t_{PHZ}		99	"	"	"			"	"		"		"		"	"
t_{PLZ}		100	"	"	"			"	"		"		"		"	"
t_{PZH}		101				4/ 5/	4/ 5/	"	All I/O's		20		20		20	"
t_{PZL}		102				"	"	"	"		"		"		"	"
t_{PHZ}		103				"	"	"	"		"		"		"	"
t_{PLZ}		104				"	"	"	"		"		"		"	"
f_{MAX}		105	9/	9/	9/			4.5 V	All register outputs	40		40		40		MHz

TABLE III. Group A inspection for device type 05.
Terminal conditions (pins not designated may be high ≥ 2.0 V, low ≤ 0.8 V, or open).

Symbol	MIL-STD-883 method	Cases R, 2 Test no.	1 I_0	2 I_1	3 I_2	4 I_3	5 I_4	6 I_5	7 I_6	8 I_7	9 I_8	10 GND	11 I_9	12 O_0	13 I/O_1	14 I/O_2
V_{IC}		1	-18 mA									GND				
		2		-18 mA								"				
		3			-18 mA							"				
		4				-18 mA						"				
		5					-18 mA					"				
		6						-18 mA				"				
		7							-18 mA			"				
		8								-18 mA		"				
		9									-18 mA	"				
		10										"	-18 mA			
		11										"			-18 mA	
		12										"				-18 mA
		13										"				
		14										"				
		15										"				
		16										"				
V_{OL}	3007	17	1/	1/	1/	1/	1/	1/	1/	1/	1/	"	1/	12 mA		
		18	"	"	"	"	"	"	"	"	"	"	"		12 mA	
		19	"	"	"	"	"	"	"	"	"	"	"			12 mA
		20	"	"	"	"	"	"	"	"	"	"	"			
		21	"	"	"	"	"	"	"	"	"	"	"			
		22	"	"	"	"	"	"	"	"	"	"	"			
		23	"	"	"	"	"	"	"	"	"	"	"			
		24	"	"	"	"	"	"	"	"	"	"	"			
V_{OH}	3006	25	"	"	"	"	"	"	"	"	"	"	"	-2 mA		
		26	"	"	"	"	"	"	"	"	"	"	"		-2 mA	
		27	"	"	"	"	"	"	"	"	"	"	"			-2 mA
		28	"	"	"	"	"	"	"	"	"	"	"			
		29	"	"	"	"	"	"	"	"	"	"	"			
		30	"	"	"	"	"	"	"	"	"	"	"			
		31	"	"	"	"	"	"	"	"	"	"	"			
		32	"	"	"	"	"	"	"	"	"	"	"			
I_{IL}	3009	33	0.4 V									"				
		34		0.4 V								"				
		35			0.4 V							"				
		36				0.4 V						"				
		37					0.4 V					"				
		38						0.4 V				"				
		39							0.4 V			"				
		40								0.4 V		"				
		41									0.4 V	"				
		42										"	0.4 V			
		43										"			0.4 V	
		44										"				0.4 V
		45										"				
		46										"				
		47										"				
		48										"				

See footnotes at end of table.

TABLE III. Group A inspection for device type 05 - Continued.
Terminal conditions (pins not designated may be high ≥ 2.0 V, low ≤ 0.8 V, or open).

Symbol	MIL-STD-883 method	Cases R, 2 Test no.	15 I/O_3	16 I/O_4	17 I/O_5	18 I/O_6	19 O_7	20 V_{CC}	Measured terminals	Test limits: Subgroup 1 T_C = +25°C Min	Subgroup 1 T_C = +25°C Max	Subgroup 2 T_C = +125°C Min	Subgroup 2 T_C = +125°C Max	Subgroup 3 T_C = -55°C Min	Subgroup 3 T_C = -55°C Max	Unit
V_{IC}		1						4.5 V	I_0		-1.5		-1.5		-1.5	V
		2						"	I_1		"		"		"	"
		3						"	I_2		"		"		"	"
		4						"	I_3		"		"		"	"
		5						"	I_4		"		"		"	"
		6						"	I_5		"		"		"	"
		7						"	I_6		"		"		"	"
		8						"	I_7		"		"		"	"
		9						"	I_8		"		"		"	"
		10						"	I_9		"		"		"	"
		11						"	I/O_1		"		"		"	"
		12						"	I/O_2		"		"		"	"
		13	-18 mA					"	I/O_3		"		"		"	"
		14		-18 mA				"	I/O_4		"		"		"	"
		15			-18 mA			"	I/O_5		"		"		"	"
		16				-18 mA		"	I/O_6		"		"		"	"
V_{CL}	3007	17						"	O_0		0.5		0.5		0.5	"
		18						"	I/O_1		"		"		"	"
		19						"	I/O_2		"		"		"	"
		20	12 mA					"	I/O_3		"		"		"	"
		21		12 mA				"	I/O_4		"		"		"	"
		22			12 mA			"	I/O_5		"		"		"	"
		23				12 mA		"	I/O_6		"		"		"	"
		24					12 mA	"	O_7		"		"		"	"
V_{CH}	3006	25						"	O_0	2.4		2.4		2.4		"
		26						"	I/O_1	"		"		"		"
		27						"	I/O_2	"		"		"		"
		28	-2 mA					"	I/O_3	"		"		"		"
		29		-2 mA				"	I/O_4	"		"		"		"
		30			-2 mA			"	I/O_5	"		"		"		"
		31				-2 mA		"	I/O_6	"		"		"		"
		32					-2 mA	"	O_7	"		"		"		"
I_{IL}	3009	33						5.5 V	I_0		-0.25		-0.25		-0.25	mA
		34						"	I_1		"		"		"	"
		35						"	I_2		"		"		"	"
		36						"	I_3		"		"		"	"
		37						"	I_4		"		"		"	"
		38						"	I_5		"		"		"	"
		39						"	I_6		"		"		"	"
		40						"	I_7		"		"		"	"
		41						"	I_8		"		"		"	"
		42						"	I_9		"		"		"	"
		43						"	I/O_1		"		"		"	"
		44						"	I/O_2		"		"		"	"
		45	0.4 V					"	I/O_3		"		"		"	"
		46		0.4 V				"	I/O_4		"		"		"	"
		47			0.4 V			"	I/O_5		"		"		"	"
		48				0.4 V		"	I/O_6		"		"		"	"

TABLE III. Group A inspection for device type 05 - Continued.
Terminal conditions (pins not designated may be high ≥ 2.0 V, low ≤ 0.8 V, or open).

Symbol	MIL-STD-883 method	Cases R, 2 Test no.	1 I_0	2 I_1	3 I_2	4 I_3	5 I_4	6 I_5	7 I_6	8 I_7	9 I_8	10 GND	11 I_9	12 O_0	13 I/O_1	14 I/O_2
I_{IH}	3010	49	2.7 V									GND				
		50		2.7 V								"				
		51			2.7 V							"				
		52				2.7 V						"				
		53					2.7 V					"				
		54						2.7 V				"				
		55							2.7 V			"				
		56								2.7 V		"				
		57									2.7 V	"				
		58										"	2.7 V			
I_I		59	5.5 V									"				
		60		5.5 V								"				
		61			5.5 V							"				
		62				5.5 V						"				
		63					5.5 V					"				
		64						5.5 V				"				
		65							5.5 V			"				
		66								5.5 V		"				
		67									5.5 V	"				
		68										"	5.5 V			
		69										"			5.5 V	
		70										"				5.5 V
		71										"				
		72										"				
		73										"				
		74										"				
I_O		75	1/	1/	1/	1/	1/	1/	1/	1/	1/	"	1/	2.25 V		
		76	"	"	"	"	"	"	"	"	"	"	"		2.25 V	
		77	"	"	"	"	"	"	"	"	"	"	"			2.25 V
		78	"	"	"	"	"	"	"	"	"	"	"			
		79	"	"	"	"	"	"	"	"	"	"	"			
		80	"	"	"	"	"	"	"	"	"	"	"			
		81	"	"	"	"	"	"	"	"	"	"	"			
		82	"	"	"	"	"	"	"	"	"	"	"			
I_{OZH}		83	"	"	"	"	"	"	"	"	"	"	"	2.7 V		
		84	"	"	"	"	"	"	"	"	"	"	"		2.7 V	
		85	"	"	"	"	"	"	"	"	"	"	"			2.7 V
		86	"	"	"	"	"	"	"	"	"	"	"			
		87	"	"	"	"	"	"	"	"	"	"	"			
		88	"	"	"	"	"	"	"	"	"	"	"			
		89	"	"	"	"	"	"	"	"	"	"	"			
		90	"	"	"	"	"	"	"	"	"	"	"			
I_{OZL}		91	"	"	"	"	"	"	"	"	"	"	"	0.4 V		
		92	"	"	"	"	"	"	"	"	"	"	"			
I_{CC}	3005	93										"				

See footnotes at end of table.

TABLE III. Group A inspection for device type 05 - Continued.
Terminal conditions (pins not designated may be high ≥ 2.0 V, low ≤ 0.8 V, or open).

Symbol	MIL-STD-883 method	Cases R, 2 Test no.	15 I/O_3	16 I/O_4	17 I/O_5	18 I/O_6	19 O_7	20 V_{CC}	Measured terminals	Test limits Subgroup 1 T_C = +25°C Min	Subgroup 1 Max	Subgroup 2 T_C = +125°C Min	Subgroup 2 Max	Subgroup 3 T_C = -55°C Min	Subgroup 3 Max	Unit
I_{IH}	3010	49						5.5 V	I_0		50		50		50	µA
		50						"	I_1		20		20		20	"
		51						"	I_2		"		"		"	"
		52						"	I_3		"		"		"	"
		53						"	I_4		"		"		"	"
		54						"	I_5		"		"		"	"
		55						"	I_6		"		"		"	"
		56						"	I_7		"		"		"	"
		57						"	I_8		"		"		"	"
		58						"	I_9		50		50		50	"
I_I		59						"	I_0		0.2		0.2		0.2	mA
		60						"	I_1		0.1		0.1		0.1	"
		61						"	I_2		"		"		"	"
		62						"	I_3		"		"		"	"
		63						"	I_4		"		"		"	"
		64						"	I_5		"		"		"	"
		65						"	I_6		"		"		"	"
		66						"	I_7		"		"		"	"
		67						"	I_8		"		"		"	"
		68						"	I_9		0.2		0.2		0.2	"
		69						"	I/O_1		0.1		0.1		0.1	"
		70						"	I/O_2		"		"		"	"
		71	5.5 V					"	I/O_3		"		"		"	"
		72		5.5 V				"	I/O_4		"		"		"	"
		73			5.5 V			"	I/O_5		"		"		"	"
		74				5.5 V		"	I/O_6		"		"		"	"
I_O		75						"	O_0	-15	-125	-15	-125	-15	-125	"
		76						"	I/O_1	"	"	"	"	"	"	"
		77						"	I/O_2	"	"	"	"	"	"	"
		78	2.25 V					"	I/O_3	"	"	"	"	"	"	"
		79		2.25 V				"	I/O_4	"	"	"	"	"	"	"
		80			2.25 V			"	I/O_5	"	"	"	"	"	"	"
		81				2.25 V		"	I/O_6	"	"	"	"	"	"	"
		82					2.25 V	"	O_7	"	"	"	"	"	"	"
I_{OZH}		83						"	O_0		20		20		20	µA
		84						"	I/O_1		100		100		100	"
		85						"	I/O_2		"		"		"	"
		86	2.7 V					"	I/O_3		"		"		"	"
		87		2.7 V				"	I/O_4		"		"		"	"
		88			2.7 V			"	I/O_5		"		"		"	"
		89				2.7 V		"	I/O_6		"		"		"	"
		90					2.7 V	"	O_7		20		20		20	"
I_{OZL}		91						"	O_0		-20		-20		-20	"
		92					0.4 V	"	O_7		-20		-20		-20	"
I_{CC}		93						"	V_{CC}		105		105		105	mA

TABLE III. Group A inspection for device type 05 - Continued.
Terminal conditions (pins not designated may be high ≥ 2.0 V, low ≤ 0.8 V, or open).

Symbol	MIL-STD-883 method	Cases R, 2 Test no.	1	2	3	4	5	6	7	8	9	10	11	12	13	14
			I_0	I_1	I_2	I_3	I_4	I_5	I_6	I_7	I_8	GND	I_9	O_0	I/O_1	I/O_2
Functional tests	3014	94	2/	2/	2/	2/	2/	2/	2/	2/	2/	GND	2/	2/	2/	2/
t_{PHL}	3003	95	3/	3/	3/	3/	3/	3/	3/	3/	3/	GND	3/	4/ 5/	4/ 5/	4/ 5/
t_{PLH}		96	"	"	"	"	"	"	"	"	"	"	"	"	"	"
t_{PZH}		97	"	"	"	"	"	"	"	"	"	"	"	"	"	"
t_{PZL}		98	"	"	"	"	"	"	"	"	"	"	"	"	"	"
t_{PHZ}		99	"	"	"	"	"	"	"	"	"	"	"	"	"	"
t_{PLZ}		100	"	"	"	"	"	"	"	"	"	"	"	"	"	"

See footnotes at end of table.

TABLE III. Group A inspection for device type 05 - Continued.
Terminal conditions (pins not designated may be high ≥ 2.0 V, low ≤ 0.8 V, or open).

Symbol	MIL-STD-883 method	Cases R, 2 Test no.	15 I/O_3	16 I/O_4	17 I/O_5	18 I/O_6	19 O_7	20 V_{CC}	Measured terminals	Test limits: Subgroup 7 T_C = +25°C Min	Subgroup 7 Max	Subgroup 8 T_C = +125°C Min	Subgroup 8 Max	Subgroup 8 T_C = -55°C Min	Subgroup 8 Max	Unit
Functional tests	3014	94	2/	2/	2/	2/	2/	5.5 V	All outputs		2/		2/		2/	
										Subgroup 9 T_C = +25°C Min	Subgroup 9 Max	Subgroup 10 T_C = +125°C Min	Subgroup 10 Max	Subgroup 11 T_C = -55°C Min	Subgroup 11 Max	
t_{PHL}	3003	95	4/ 5/	4/ 5/	4/ 5/	4/ 5/	4/ 5/	3/	All outputs		30		30		30	ns
t_{PLH}		96	"	"	"	"	"	"	"		"		"		"	"
t_{PZH}		97	"	"	"	"	"	"	"		"		"		"	"
t_{PZL}		98	"	"	"	"	"	"	"		"		"		"	"
t_{PHZ}		99	"	"	"	"	"	"	"		"		"		"	"
t_{PLZ}		100	"	"	"	"	"	"	"		"		"		"	"

TABLE III. Group A inspection for device type 06.
Terminal conditions (pins not designated may be high $\geq$ 2.0 V, low $\leq$ 0.8 V, or open).

Symbol	MIL-STD-883 method	Cases R, 2	1	2	3	4	5	6	7	8	9	10	11	12	13	14
		Test no.	CLK	I_0	I_1	I_2	I_3	I_4	I_5	I_6	I_7	GND	$\overline{OE}$	O_0	O_1	O_2
V_{IC}		1	-18 mA									GND				
		2		-18 mA								"				
		3			-18 mA							"				
		4				-18 mA						"				
		5					-18 mA					"				
		6						-18 mA				"				
		7							-18 mA			"				
		8								-18 mA		"				
		9									-18 mA	"				
		10										"	-18 mA			
V_{OL}	3007	11	1/	1/	1/	1/	1/	1/	1/	1/	1/	"	1/ 6/	12 mA		
		12	"	"	"	"	"	"	"	"	"	"	"		12 mA	
		13	"	"	"	"	"	"	"	"	"	"	"			12 mA
		14	"	"	"	"	"	"	"	"	"	"	"			
		15	"	"	"	"	"	"	"	"	"	"	"			
		16	"	"	"	"	"	"	"	"	"	"	"			
		17	"	"	"	"	"	"	"	"	"	"	"			
		18	"	"	"	"	"	"	"	"	"	"	"			
V_{OH}	3006	19	"	"	"	"	"	"	"	"	"	"	"	-2 mA		
		20	"	"	"	"	"	"	"	"	"	"	"		-2 mA	
		21	"	"	"	"	"	"	"	"	"	"	"			-2 mA
		22	"	"	"	"	"	"	"	"	"	"	"			
		23	"	"	"	"	"	"	"	"	"	"	"			
		24	"	"	"	"	"	"	"	"	"	"	"			
		25	"	"	"	"	"	"	"	"	"	"	"			
		26	"	"	"	"	"	"	"	"	"	"	"			
I_{IL}	3009	27	0.4 V									"				
		28		0.4 V								"				
		29			0.4 V							"				
		30				0.4 V						"				
		31					0.4 V					"				
		32						0.4 V				"				
		33							0.4 V			"				
		34								0.4 V		"				
		35									0.4 V	"				
		36										"	0.4 V			

See footnotes at end of table.

TABLE III. Group A inspection for device type 06 - Continued.
Terminal conditions (pins not designated may be high ≥ 2.0 V, low ≤ 0.8 V, or open).

Symbol	MIL-STD-883 method	Cases R, 2 Test no.	15 O_3	16 O_4	17 O_5	18 O_6	19 O_7	20 V_{CC}	Measured terminals	Test limits: Subgroup 1 T_C = +25°C Min	Subgroup 1 Max	Subgroup 2 T_C = +125°C Min	Subgroup 2 Max	Subgroup 3 T_C = -55°C Min	Subgroup 3 Max	Unit
V_{IC}		1						4.5 V	CLOCK		-1.5		-1.5		-1.5	V
		2						"	I_0		"		"		"	"
		3						"	I_1		"		"		"	"
		4						"	I_2		"		"		"	"
		5						"	I_3		"		"		"	"
		6						"	I_4		"		"		"	"
		7						"	I_5		"		"		"	"
		8						"	I_6		"		"		"	"
		9						"	I_7		"		"		"	"
		10						"	$\overline{OE}$		"		"		"	"
V_{OL}	3007	11						"	O_0		0.5		0.5		0.5	"
		12						"	O_1		"		"		"	"
		13						"	O_2		"		"		"	"
		14	12 mA					"	O_3		"		"		"	"
		15		12 mA				"	O_4		"		"		"	"
		16			12 mA			"	O_5		"		"		"	"
		17				12 mA		"	O_6		"		"		"	"
		18					12 mA	"	O_7		"		"		"	"
V_{OH}	3006	19						"	O_0	2.4		2.4		2.4		"
		20						"	O_1	"		"		"		"
		21						"	O_2	"		"		"		"
		22	-2 mA					"	O_3	"		"		"		"
		23		-2 mA				"	O_4	"		"		"		"
		24			-2 mA			"	O_5	"		"		"		"
		25				-2 mA		"	O_6	"		"		"		"
		26					-2 mA	"	O_7	"		"		"		"
I_{IL}		27						5.5 V	CLOCK		-0.25		-0.25		-0.25	mA
		28						"	I_0		"		"		"	"
		29						"	I_1		"		"		"	"
		30						"	I_2		"		"		"	"
		31						"	I_3		"		"		"	"
		32						"	I_4		"		"		"	"
		33						"	I_5		"		"		"	"
		34						"	I_6		"		"		"	"
		35						"	I_7		"		"		"	"
		36						"	$\overline{OE}$		"		"		"	"

TABLE III. Group A inspection for device type 06 - Continued.
Terminal conditions (pins not designated may be high ≥ 2.0 V, low ≤ 0.8 V, or open).

Symbol	MIL-STD-883 method	Cases R, 2 Test no.	1 CLK	2 I_0	3 I_1	4 I_2	5 I_3	6 I_4	7 I_5	8 I_6	9 I_7	10 GND	11 $\overline{OE}$	12 O_C	13 O_1	14 O_2
I_{IH}	3010	37	2.7 V									GND				
		38		2.7 V								"				
		39			2.7 V							"				
		40				2.7 V						"				
		41					2.7 V					"				
		42						2.7 V				"				
		43							2.7 V			"				
		44								2.7 V		"				
		45									2.7 V	"				
		46										"	2.7 V			
I_{IL}		47	5.5 V									"				
		48		5.5 V								"				
		49			5.5 V							"				
		50				5.5 V						"				
		51					5.5 V					"				
		52						5.5 V				"				
		53							5.5 V			"				
		54								5.5 V		"				
		55									5.5 V	"				
		56										"	5.5 V			
I_D		57	1/	1/	1/	1/	1/	1/	1/	1/	1/	"	1/ 6/	2.25 V		
		58	"	"	"	"	"	"	"	"	"	"	"		2.25 V	
		59	"	"	"	"	"	"	"	"	"	"	"			2.25 V
		60	"	"	"	"	"	"	"	"	"	"	"			
		61	"	"	"	"	"	"	"	"	"	"	"			
		62	"	"	"	"	"	"	"	"	"	"	"			
		63	"	"	"	"	"	"	"	"	"	"	"			
		64	"	"	"	"	"	"	"	"	"	"	"			
I_{DZH}		65	"	"	"	"	"	"	"	"	"	"	1/ 7/	2.7 V		
		66	"	"	"	"	"	"	"	"	"	"	"		2.7 V	
		67	"	"	"	"	"	"	"	"	"	"	"			2.7 V
		68	"	"	"	"	"	"	"	"	"	"	"			
		69	"	"	"	"	"	"	"	"	"	"	"			
		70	"	"	"	"	"	"	"	"	"	"	"			
		71	"	"	"	"	"	"	"	"	"	"	"			
		72	"	"	"	"	"	"	"	"	"	"	"			
I_{DZL}		73	"	"	"	"	"	"	"	"	"	"	"	0.4 V		
		74	"	"	"	"	"	"	"	"	"	"	"		0.4 V	
		75	"	"	"	"	"	"	"	"	"	"	"			0.4 V
		76	"	"	"	"	"	"	"	"	"	"	"			
		77	"	"	"	"	"	"	"	"	"	"	"			
		78	"	"	"	"	"	"	"	"	"	"	"			
		79	"	"	"	"	"	"	"	"	"	"	"			
		80	"	"	"	"	"	"	"	"	"	"	"			
I_{CC}	3005	81										"				

See footnotes at end of table.

TABLE III. Group A inspection for device type 06 - Continued.
Terminal conditions (pins not designated may be high ≥ 2.0 V, low ≤ 0.8 V, or open).

Symbol	MIL-STD-883 method	Cases R, 2 Test no.	15 O_3	16 O_4	17 O_5	18 O_6	19 O_7	20 V_{CC}	Measured terminals	Test limits: Subgroup 1 T_C = +25°C Min	Subgroup 1 Max	Subgroup 2 T_C = +125°C Min	Subgroup 2 Max	Subgroup 3 T_C = -55°C Min	Subgroup 3 Max	Unit
I_{IH}	3010	37						5.5 V	CLOCK		50		50		50	µA
		38						"	I_0		20		20		20	"
		39						"	I_1		"		"		"	"
		40						"	I_2		"		"		"	"
		41						"	I_3		"		"		"	"
		42						"	I_4		"		"		"	"
		43						"	I_5		"		"		"	"
		44						"	I_6		"		"		"	"
		45						"	I_7		"		"		"	"
		46						"	$\overline{OE}$		50		50		50	"
I_I		47						"	CLOCK		0.2		0.2		0.2	mA
		48						"	I_0		0.1		0.1		0.1	"
		49						"	I_1		"		"		"	"
		50						"	I_2		"		"		"	"
		51						"	I_3		"		"		"	"
		52						"	I_4		"		"		"	"
		53						"	I_5		"		"		"	"
		54						"	I_6		"		"		"	"
		55						"	I_7		"		"		"	"
		56						"	$\overline{OE}$		0.2		0.2		0.2	"
I_C		57						"	O_0	-15	-125	-15	-125	-15	-125	"
		58						"	O_1	"	"	"	"	"	"	"
		59						"	O_2	"	"	"	"	"	"	"
		60	2.25 V					"	O_3	"	"	"	"	"	"	"
		61		2.25 V				"	O_4	"	"	"	"	"	"	"
		62			2.25 V			"	O_5	"	"	"	"	"	"	"
		63				2.25 V		"	O_6	"	"	"	"	"	"	"
		64					2.25 V	"	O_7	"	"	"	"	"	"	"
I_{CZH}		65						"	O_0		20		20		20	µA
		66						"	O_1		"		"		"	"
		67						"	O_2		"		"		"	"
		68	2.7 V					"	O_3		"		"		"	"
		69		2.7 V				"	O_4		"		"		"	"
		70			2.7 V			"	O_5		"		"		"	"
		71				2.7 V		"	O_6		"		"		"	"
		72					2.7 V	"	O_7		"		"		"	"
I_{CZL}		73						"	O_0		-20		-20		-20	"
		74						"	O_1		"		"		"	"
		75						"	O_2		"		"		"	"
		76	0.4 V					"	O_3		"		"		"	"
		77		0.4 V				"	O_4		"		"		"	"
		78			0.4 V			"	O_5		"		"		"	"
		79				0.4 V		"	O_6		"		"		"	"
		80					0.4 V	"	O_7		"		"		"	"
I_{CC}	3005	81						"	V_{CC}		105		105		105	mA

TABLE III. Group A inspection for device type 06 - Continued.
Terminal conditions (pins not designated may be high ≥ 2.0 V, low ≤ 0.8 V, or open).

Symbol	MIL-STD-883 method	Cases R, 2 Test no.	1 CLK	2 I_0	3 I_1	4 I_2	5 I_3	6 I_4	7 I_5	8 I_6	9 I_7	10 GND	11 $\overline{OE}$	12 O_0	13 O_1	14 O_2
Functional tests	3014	82	2/	2/	2/	2/	2/	2/	2/	2/	2/	GND	2/	2/	2/	2/
t_{SU} 10/	3003	83	3/	3/	3/	3/	3/	3/	3/	3/	3/	GND	6/	4/ 8/	4/ 8/	4/ 8/
$t_{P(CL)}$ 10/		84	"	"	"	"	"	"	"	"	"	"	"	"	"	"
t_{PCH}		85	"	"	"	"	"	"	"	"	"	"	"	"	"	"
t_{PCL}		86	"	"	"	"	"	"	"	"	"	"	"	"	"	"
t_{PZH}		87	"	"	"	"	"	"	"	"	"	"	3/	"	"	"
t_{PZL}		88	"	"	"	"	"	"	"	"	"	"	"	"	"	"
t_{PHZ}		89	"	"	"	"	"	"	"	"	"	"	"	"	"	"
t_{PLZ}		90	"	"	"	"	"	"	"	"	"	"	"	"	"	"
f_{MAX}		91	9/	9/	9/	9/	9/	9/	9/	9/	9/	"	6/	9/	9/	9/

See footnotes at end of table.

TABLE III. Group A inspection for device type 06 - Continued.
Terminal conditions (pins not designated may be high $\geq$ 2.0 V, low $\leq$ 0.8 V, or open).

Symbol	MIL-STD-883 method	Cases R, Z Test no.	15 O_3	16 O_4	17 O_5	18 O_6	19 O_7	20 V_{CC}	Measured terminals	Test limits: Subgroup 7 T_C = +25°C Min	Subgroup 7 Max	Subgroup 8 T_C = +125°C Min	Subgroup 8 Max	Subgroup 8 T_C = -55°C Min	Subgroup 8 Max	Unit
Functional tests	3014	82	2/	2/	2/	2/	2/	5.5 V	All outputs		2/		2/		2/	
										Subgroup 9 T_C = +25°C Min	Subgroup 9 Max	Subgroup 10 T_C = +125°C Min	Subgroup 10 Max	Subgroup 11 T_C = -55°C Min	Subgroup 11 Max	
t_{SU} 10/	3003	83	4/ 8/	4/ 8/	4/ 8/	4/ 8/	4/ 8/	3/	All register outputs	25		25		25		ns
$t_{P(CL)}$ 10/		84	"	"	"	"	"	"	"	20		20		20		"
t_{PCH}		85	"	"	"	"	"	"	"		20		20		20	"
t_{PCL}		86	"	"	"	"	"	"	"		20		20		20	"
t_{PZH}		87	"	"	"	"	"	"	"		25		25		25	"
t_{PZL}		88	"	"	"	"	"	"	"		"		"		"	"
t_{PHZ}		89	"	"	"	"	"	"	"		"		"		"	"
t_{PLZ}		90	"	"	"	"	"	"	"		"		"		"	"
f_{MAX}		91	9/	9/	9/	9/	9/	4.5 V	"	25		25		25		MHz

TABLE III. Group A inspection for device type 07.
Terminal conditions (pins not designated may be high ≥ 2.0 V, low ≤ 0.8 V, or open).

Symbol	MIL-STD-883 method	Cases R, 2	1	2	3	4	5	6	7	8	9	10	11	12	13	14
		Test no.	CLK	I_0	I_1	I_2	I_3	I_4	I_5	I_6	I_7	GND	$\overline{OE}$	I/O_0	O_1	O_2
V_{IC}		1	-18 mA									GND				
		2		-18 mA								"				
		3			-18 mA							"				
		4				-18 mA						"				
		5					-18 mA					"				
		6						-18 mA				"				
		7							-18 mA			"				
		8								-18 mA		"				
		9									-18 mA	"				
		10										"	-18 mA			
		11										"		-18 mA		
		12										"				
V_{OL}	3007	13	1/	1/	1/	1/	1/	1/	1/	1/	1/	"	1/ 6/	12 mA		
		14	"	"	"	"	"	"	"	"	"	"	"		12 mA	
		15	"	"	"	"	"	"	"	"	"	"	"			12 mA
		16	"	"	"	"	"	"	"	"	"	"	"			
		17	"	"	"	"	"	"	"	"	"	"	"			
		18	"	"	"	"	"	"	"	"	"	"	"			
		19	"	"	"	"	"	"	"	"	"	"	"			
		20	"	"	"	"	"	"	"	"	"	"	"			
V_{OH}	3006	21	"	"	"	"	"	"	"	"	"	"	"	-2 mA		
		22	"	"	"	"	"	"	"	"	"	"	"		-2 mA	
		23	"	"	"	"	"	"	"	"	"	"	"			-2 mA
		24	"	"	"	"	"	"	"	"	"	"	"			
		25	"	"	"	"	"	"	"	"	"	"	"			
		26	"	"	"	"	"	"	"	"	"	"	"			
		27	"	"	"	"	"	"	"	"	"	"	"			
		28	"	"	"	"	"	"	"	"	"	"	"			
I_{IL}	3009	29	0.4 V									"				
		30		0.4 V								"				
		31			0.4 V							"				
		32				0.4 V						"				
		33					0.4 V					"				
		34						0.4 V				"				
		35							0.4 V			"				
		36								0.4 V		"				
		37									0.4 V	"				
		38										"	0.4 V			
		39										"		0.4 V		
		40										"				

See footnotes at end of table.

TABLE III. Group A inspection for device type 07 - Continued.
Terminal conditions (pins not designated may be high ≥ 2.0 V, low ≤ 0.8 V, or open).

Symbol	MIL-STD-883 method	Cases R, 2 Test no.	15 O_3	16 O_4	17 O_5	18 O_6	19 I/O_7	20 V_{CC}	Measured terminals	Test limits: Subgroup 1 T_C = +25°C Min	Subgroup 1 Max	Subgroup 2 T_C = +125°C Min	Subgroup 2 Max	Subgroup 3 T_C = -55°C Min	Subgroup 3 Max	Unit
V_{IC}		1						4.5 V	CLOCK		-1.5		-1.5		-1.5	V
		2						"	I_0		"		"		"	"
		3						"	I_1		"		"		"	"
		4						"	I_2		"		"		"	"
		5						"	I_3		"		"		"	"
		6						"	I_4		"		"		"	"
		7						"	I_5		"		"		"	"
		8						"	I_6		"		"		"	"
		9						"	I_7		"		"		"	"
		10						"	$\overline{OE}$		"		"		"	"
		11						"	I/O_0		"		"		"	"
		12					-18 mA	"	I/O_7		"		"		"	"
V_{OL}	3007	13						"	I/O_0		0.5		0.5		0.5	"
		14						"	O_1		"		"		"	"
		15						"	O_2		"		"		"	"
		16	12 mA					"	O_3		"		"		"	"
		17		12 mA				"	O_4		"		"		"	"
		18			12 mA			"	O_5		"		"		"	"
		19				12 mA		"	O_6		"		"		"	"
		20					12 mA	"	I/O_7		"		"		"	"
V_{OH}	3006	21						"	I/O_0	2.4		2.4		2.4		"
		22						"	O_1	"		"		"		"
		23						"	O_2	"		"		"		"
		24	-2 mA					"	O_3	"		"		"		"
		25		-2 mA				"	O_4	"		"		"		"
		26			-2 mA			"	O_5	"		"		"		"
		27				-2 mA		"	O_6	"		"		"		"
		28					-2 mA	"	I/O_7	"		"		"		"
I_{IL}	3009	29						5.5 V	CLOCK		-0.25		-0.25		-0.25	mA
		30						"	I_0		"		"		"	"
		31						"	I_1		"		"		"	"
		32						"	I_2		"		"		"	"
		33						"	I_3		"		"		"	"
		34						"	I_4		"		"		"	"
		35						"	I_5		"		"		"	"
		36						"	I_6		"		"		"	"
		37						"	I_7		"		"		"	"
		38						"	$\overline{OE}$		"		"		"	"
		39						"	I/O_0		"		"		"	"
		40					0.4 V	"	I/O_7		"		"		"	"

TABLE III. Group A inspection for device type 07 - Continued.
Terminal conditions (pins not designated may be high ≥ 2.0 V, low ≤ 0.8 V, or open).

Symbol	MIL-STD-883 method	Cases R, Z Test no.	1 CLK	2 I_0	3 I_1	4 I_2	5 I_3	6 I_4	7 I_5	8 I_6	9 I_7	10 GND	11 $\overline{OE}$	12 I/O_D	13 O_1	14 O_2
I_{IH}	3010	41	2.7 V									GND				
		42		2.7 V								"				
		43			2.7 V							"				
		44				2.7 V						"				
		45					2.7 V					"				
		46						2.7 V				"				
		47							2.7 V			"				
		48								2.7 V		"				
		49									2.7 V	"				
		50										"	2.7 V			
I_I		51	5.5 V									"				
		52		5.5 V								"				
		53			5.5 V							"				
		54				5.5 V						"				
		55					5.5 V					"				
		56						5.5 V				"				
		57							5.5 V			"				
		58								5.5 V		"				
		59									5.5 V	"				
		60										"	5.5 V			
		61										"		5.5 V		
		62										"				
I_D		63	1/	1/	1/	1/	1/	1/	1/	1/	1/	"	1/ 6/	2.25 V		
		64	"	"	"	"	"	"	"	"	"	"	"		2.25 V	
		65	"	"	"	"	"	"	"	"	"	"	"			2.25 V
		66	"	"	"	"	"	"	"	"	"	"	"			
		67	"	"	"	"	"	"	"	"	"	"	"			
		68	"	"	"	"	"	"	"	"	"	"	"			
		69	"	"	"	"	"	"	"	"	"	"	"			
		70	"	"	"	"	"	"	"	"	"	"	"			
I_{DZH}		71	"	"	"	"	"	"	"	"	"	"	1/ 7/	2.7 V		
		72	"	"	"	"	"	"	"	"	"	"	"		2.7 V	
		73	"	"	"	"	"	"	"	"	"	"	"			2.7 V
		74	"	"	"	"	"	"	"	"	"	"	"			
		75	"	"	"	"	"	"	"	"	"	"	"			
		76	"	"	"	"	"	"	"	"	"	"	"			
		77	"	"	"	"	"	"	"	"	"	"	"			
		78	"	"	"	"	"	"	"	"	"	"	"			
I_{DZL}		79	"	"	"	"	"	"	"	"	"	"	"			
		80	"	"	"	"	"	"	"	"	"	"	"		0.4 V	
		81	"	"	"	"	"	"	"	"	"	"	"			0.4 V
		82	"	"	"	"	"	"	"	"	"	"	"			
		83	"	"	"	"	"	"	"	"	"	"	"			
		84	"	"	"	"	"	"	"	"	"	"	"			
I_{CC}	3005	85										"				

See footnotes at end of table.

TABLE III. Group A inspection for device type 07 - Continued.
Terminal conditions (pins not designated may be high ≥ 2.0 V, low ≤ 0.8 V, or open).

Symbol	MIL-STD-883 method	Cases R, 2 Test no.	15 O_3	16 O_4	17 O_5	18 O_6	19 I/O_7	20 V_{CC}	Measured terminals	Test limits: Subgroup 1 T_C = +25°C Min	Subgroup 1 Max	Subgroup 2 T_C = +125°C Min	Subgroup 2 Max	Subgroup 3 T_C = -55°C Min	Subgroup 3 Max	Unit
I_{IH}	3010	41						5.5 V	CLOCK		50		50		50	μA
		42						"	I_0		20		20		20	"
		43						"	I_1		"		"		"	"
		44						"	I_2		"		"		"	"
		45						"	I_3		"		"		"	"
		46						"	I_4		"		"		"	"
		47						"	I_5		"		"		"	"
		48						"	I_6		"		"		"	"
		49						"	I_7		"		"		"	"
		50						"	$\overline{OE}$		50		50		50	"
I_I		51						"	CLOCK		0.2		0.2		0.2	mA
		52						"	I_0		0.1		0.1		0.1	"
		53						"	I_1		"		"		"	"
		54						"	I_2		"		"		"	"
		55						"	I_3		"		"		"	"
		56						"	I_4		"		"		"	"
		57						"	I_5		"		"		"	"
		58						"	I_6		"		"		"	"
		59						"	I_7		"		"		"	"
		60						"	$\overline{OE}$		0.2		0.2		0.2	"
		61						"	I/O_0		0.1		0.1		0.1	"
		62					5.5 V	"	I/O_7		0.1		0.1		0.1	"
I_O		63						"	I/O_0	-15	-125	-15	-125	-15	-125	"
		64						"	O_1	"	"	"	"	"	"	"
		65						"	O_2	"	"	"	"	"	"	"
		66	2.25 V					"	O_3	"	"	"	"	"	"	"
		67		2.25 V				"	O_4	"	"	"	"	"	"	"
		68			2.25 V			"	O_5	"	"	"	"	"	"	"
		69				2.25 V		"	O_6	"	"	"	"	"	"	"
		70					2.25 V	"	I/O_7	"	"	"	"	"	"	"
I_{OZH}		71						"	I/O_0		100		100		100	μA
		72						"	O_1		20		20		20	"
		73						"	O_2		"		"		"	"
		74	2.7 V					"	O_3		"		"		"	"
		75		2.7 V				"	O_4		"		"		"	"
		76			2.7 V			"	O_5		"		"		"	"
		77				2.7 V		"	O_6		"		"		"	"
		78					2.7 V	"	I/O_7		100		100		100	"
I_{OZL}		79						"	O_1		-20		-20		-20	"
		80						"	O_2		"		"		"	"
		81	0.4 V					"	O_3		"		"		"	"
		82		0.4 V				"	O_4		"		"		"	"
		83			0.4 V			"	O_5		"		"		"	"
		84				0.4 V		"	O_6		"		"		"	"
I_{CC}	3005	85						"	V_{CC}		105		105		105	mA

TABLE III. Group A inspection for device type 07 - Continued.
Terminal conditions (pins not designated may be high ≥ 2.0 V, low ≤ 0.8 V, or open).

Symbol	MIL-STD-883 method	Cases R, 2 Test no.	1	2	3	4	5	6	7	8	9	10	11	12	13	14
			CLK	I_0	I_1	I_2	I_3	I_4	I_5	I_6	I_7	GND	$\overline{OE}$	I/O_0	O_1	O_2
Functional tests	3014	86	2/	2/	2/	2/	2/	2/	2/	2/	2/	GND	2/	2/	2/	2/
t_{SU} 10/	3003	87	3/	3/	3/	3/	3/	3/	3/	3/	3/	GND	6/		4/ 8/	4/ 8/
$t_{P(CL)}$ 10/		88	"	"	"	"	"	"	"	"	"	"	"		"	"
t_{PCL}		89	"	"	"	"	"	"	"	"	"	"	"		"	"
t_{PCH}		90	"	"	"	"	"	"	"	"	"	"	"		"	"
t_{PHL}		91	"	"	"	"	"	"	"	"	"	"		4/ 5/		
t_{PLH}		92	"	"	"	"	"	"	"	"	"	"		4/ 5/		
t_{PZH}		93	"	"	"	"	"	"	"	"	"	"	3/		4/ 8/	4/ 8/
t_{PZL}		94	"	"	"	"	"	"	"	"	"	"	"		"	"
t_{PHZ}		95	"	"	"	"	"	"	"	"	"	"	"		"	"
t_{PLZ}		96	"	"	"	"	"	"	"	"	"	"	"		"	"
t_{PZH}		97	"	"	"	"	"	"	"	"	"	"		4/ 5/		
t_{PZL}		98	"	"	"	"	"	"	"	"	"	"		"		
t_{PHZ}		99	"	"	"	"	"	"	"	"	"	"		"		
t_{PLZ}		100	"	"	"	"	"	"	"	"	"	"		"		
f_{MAX}		101	9/	9/	9/	9/	9/	9/	9/	9/	9/	"	6/		9/	9/

See footnotes at end of table.

TABLE III. Group A inspection for device type 07 - Continued.
Terminal conditions (pins not designated may be high ≥ 2.0 V, low ≤ 0.8 V, or open).

Symbol	MIL-STD-883 method	Cases R, 2 Test no.	15 O_3	16 O_4	17 O_5	18 O_6	19 I/O_7	20 V_{CC}	Measured terminals	Test limits: Subgroup 7 T_C = +25°C Min	Subgroup 7 Max	Subgroup 8 T_C = +125°C Min	Subgroup 8 Max	Subgroup 8 T_C = -55°C Min	Subgroup 8 Max	Unit
Functional tests	3014	86	2/	2/	2/	2/	2/	5.5 V	All outputs		2/		2/		2/	
										Subgroup 9 T_C = +25°C Min	Subgroup 9 Max	Subgroup 10 T_C = +125°C Min	Subgroup 10 Max	Subgroup 11 T_C = -55°C Min	Subgroup 11 Max	
t_{SU} 10/	3003	87	4/ 8/	4/ 8/	4/ 8/	4/ 8/		3/	All register outputs	25		25		25		ns
$t_{P(CL)}$ 10/		88	"	"	"	"		"	"	20		20		20		"
t_{PCL}		89	"	"	"	"		"	"		20		20		20	"
t_{PCH}		90	"	"	"	"		"	"		20		20		20	"
t_{PHL}		91					4/ 5/	"	All I/O's		30		30		30	"
t_{PLH}		92					4/ 5/	"	All I/O's		30		30		30	"
t_{PZH}		93	4/ 8/	4/ 8/	4/ 8/	4/ 8/		"	All register outputs		25		25		25	"
t_{PZL}		94	"	"	"	"		"	"		"		"		"	"
t_{PHZ}		95	"	"	"	"		"	"		"		"		"	"
t_{PLZ}		96	"	"	"	"		"	"		"		"		"	"
t_{PZH}		97					4/ 5/	"	All I/O's		30		30		30	"
t_{PZL}		98					"	"	"		"		"		"	"
t_{PHZ}		99					"	"	"		"		"		"	"
t_{PLZ}		100					"	"	"		"		"		"	"
f_{MAX}		101	9/	9/	9/	9/		4.5 V	All register outputs	25		25		25		MHz

TABLE III. Group A inspection for device type 08.
Terminal conditions (pins not designated may be high ≥ 2.0 V, low ≤ 0.8 V, or open).

Symbol	MIL-STD-883 method	Cases R, 2 Test no.	1 CLK	2 I_0	3 I_1	4 I_2	5 I_3	6 I_4	7 I_5	8 I_6	9 I_7	10 GND	11 $\overline{OE}$	12 I/O_3	13 I/O_1	14 O_2
V_{IC}		1	-18 mA									GND				
		2		-18 mA								"				
		3			-18 mA							"				
		4				-18 mA						"				
		5					-18 mA					"				
		6						-18 mA				"				
		7							-18 mA			"				
		8								-18 mA		"				
		9									-18 mA	"				
		10										"	-18 mA			
		11										"		-18 mA		
		12										"			-18 mA	
		13										"				
		14										"				
V_{OL}	3007	15	1/	1/	1/	1/	1/	1/	1/	1/	1/	"	1/ 6/	12 mA		
		16	"	"	"	"	"	"	"	"	"	"	"		12 mA	
		17	"	"	"	"	"	"	"	"	"	"	"			12 mA
		18	"	"	"	"	"	"	"	"	"	"	"			
		19	"	"	"	"	"	"	"	"	"	"	"			
		20	"	"	"	"	"	"	"	"	"	"	"			
		21	"	"	"	"	"	"	"	"	"	"	"			
		22	"	"	"	"	"	"	"	"	"	"	"			
V_{OH}	3006	23	"	"	"	"	"	"	"	"	"	"	"	-2 mA		
		24	"	"	"	"	"	"	"	"	"	"	"		-2 mA	
		25	"	"	"	"	"	"	"	"	"	"	"			-2 mA
		26	"	"	"	"	"	"	"	"	"	"	"			
		27	"	"	"	"	"	"	"	"	"	"	"			
		28	"	"	"	"	"	"	"	"	"	"	"			
		29	"	"	"	"	"	"	"	"	"	"	"			
		30	"	"	"	"	"	"	"	"	"	"	"			
I_{IL}	3009	31	0.4 V									"				
		32		0.4 V								"				
		33			0.4 V							"				
		34				0.4 V						"				
		35					0.4 V					"				
		36						0.4 V				"				
		37							0.4 V			"				
		38								0.4 V		"				
		39									0.4 V	"				
		40										"	0.4 V			
		41										"		0.4 V		
		42										"			0.4 V	
		43										"				
		44										"				

See footnotes at end of table.

TABLE III. Group A inspection for device type 08 - Continued.
Terminal conditions (pins not designated may be high ≥ 2.0 V, low ≤ 0.8 V, or open).

Symbol	MIL-STD-883 method	Cases R, 2 Test no.	15 O_3	16 O_4	17 O_5	18 I/O_6	19 I/O_7	20 V_{CC}	Measured terminals	Test limits: Subgroup 1 T_C = +25°C Min	Subgroup 1 Max	Subgroup 2 T_C = +125°C Min	Subgroup 2 Max	Subgroup 3 T_C = -55°C Min	Subgroup 3 Max	Unit
V_{IC}		1						4.5 V	CLOCK		-1.5		-1.5		-1.5	V
		2						"	I_0		"		"		"	"
		3						"	I_1		"		"		"	"
		4						"	I_2		"		"		"	"
		5						"	I_3		"		"		"	"
		6						"	I_4		"		"		"	"
		7						"	I_5		"		"		"	"
		8						"	I_6		"		"		"	"
		9						"	I_7		"		"		"	"
		10						"	$\overline{OE}$		"		"		"	"
		11						"	I/O_0		"		"		"	"
		12						"	I/O_1		"		"		"	"
		13				-18 mA		"	I/O_6		"		"		"	"
		14					-18 mA	"	I/O_7		"		"		"	"
V_{OL}	3007	15						"	I/O_0		0.5		0.5		0.5	"
		16						"	I/O_1		"		"		"	"
		17						"	O_2		"		"		"	"
		18	12 mA					"	O_3		"		"		"	"
		19		12 mA				"	O_4		"		"		"	"
		20			12 mA			"	O_5		"		"		"	"
		21				12 mA		"	I/O_6		"		"		"	"
		22					12 mA	"	I/O_7		"		"		"	"
V_{OH}	3006	23						"	I/O_0	2.4		2.4		2.4		"
		24						"	I/O_1	"		"		"		"
		25						"	O_2	"		"		"		"
		26	-2 mA					"	O_3	"		"		"		"
		27		-2 mA				"	O_4	"		"		"		"
		28			-2 mA			"	O_5	"		"		"		"
		29				-2 mA		"	I/O_6	"		"		"		"
		30					-2 mA	"	I/O_7	"		"		"		"
I_{IL}	3009	31						5.5 V	CLOCK		-0.25		-0.25		-0.25	mA
		32						"	I_0		"		"		"	"
		33						"	I_1		"		"		"	"
		34						"	I_2		"		"		"	"
		35						"	I_3		"		"		"	"
		36						"	I_4		"		"		"	"
		37						"	I_5		"		"		"	"
		38						"	I_6		"		"		"	"
		39						"	I_7		"		"		"	"
		40						"	$\overline{OE}$		"		"		"	"
		41						"	I/O_0		"		"		"	"
		42						"	I/O_1		"		"		"	"
		43				0.4 V		"	I/O_6		"		"		"	"
		44					0.4 V	"	I/O_7		"		"		"	"

TABLE III. Group A inspection for device type 08 - Continued.
Terminal conditions (pins not designated may be high ≥ 2.0 V, low ≤ 0.8 V, or open).

Symbol	MIL-STD-883 method	Cases R, 2 Test no.	1	2	3	4	5	6	7	8	9	10	11	12	13	14
			CLK	I_0	I_1	I_2	I_3	I_4	I_5	I_6	I_7	GND	$\overline{OE}$	I/O_0	I/O_1	O_2
I_{IH}	3010	45	2.7 V									GND				
		46		2.7 V								"				
		47			2.7 V							"				
		48				2.7 V						"				
		49					2.7 V					"				
		50						2.7 V				"				
		51							2.7 V			"				
		52								2.7 V		"				
		53									2.7 V	"				
		54										"	2.7 V			
I_I		55	5.5 V									"				
		56		5.5 V								"				
		57			5.5 V							"				
		58				5.5 V						"				
		59					5.5 V					"				
		60						5.5 V				"				
		61							5.5 V			"				
		62								5.5 V		"				
		63									5.5 V	"				
		64										"	5.5 V			
		65										"		5.5 V		
		66										"			5.5 V	
		67										"				
		68										"				
I_O		69	1/	1/	1/	1/	1/	1/	1/	1/	1/	"	1/ 6/	2.25 V		
		70	"	"	"	"	"	"	"	"	"	"	"		2.25 V	
		71	"	"	"	"	"	"	"	"	"	"	"			2.25 V
		72	"	"	"	"	"	"	"	"	"	"	"			
		73	"	"	"	"	"	"	"	"	"	"	"			
		74	"	"	"	"	"	"	"	"	"	"	"			
		75	"	"	"	"	"	"	"	"	"	"	"			
		76	"	"	"	"	"	"	"	"	"	"	"			
I_{OZH}		77	"	"	"	"	"	"	"	"	"	"	1/ 7/	2.7 V		
		78	"	"	"	"	"	"	"	"	"	"	"		2.7 V	
		79	"	"	"	"	"	"	"	"	"	"	"			2.7 V
		80	"	"	"	"	"	"	"	"	"	"	"			
		81	"	"	"	"	"	"	"	"	"	"	"			
		82	"	"	"	"	"	"	"	"	"	"	"			
		83	"	"	"	"	"	"	"	"	"	"	"			
		84	"	"	"	"	"	"	"	"	"	"	"			
I_{OZL}		85	"	"	"	"	"	"	"	"	"	"	"			
		86	"	"	"	"	"	"	"	"	"	"	"			0.4 V
		87	"	"	"	"	"	"	"	"	"	"	"			
		88	"	"	"	"	"	"	"	"	"	"	"			
I_{CC}	3005	89										"				

See footnotes at end of table.

TABLE III. Group A inspection for device type 08 - Continued.
Terminal conditions (pins not designated may be high ≥ 2.0 V, low ≤ 0.8 V, or open).

Symbol	MIL-STD-883 method	Cases R, 2 Test no.	15 O_3	16 O_4	17 O_5	18 I/O_6	19 I/O_7	20 V_{CC}	Measured terminals	Test limits: Subgroup 1 T_C = +25°C Min	Subgroup 1 Max	Subgroup 2 T_C = +125°C Min	Subgroup 2 Max	Subgroup 3 T_C = -55°C Min	Subgroup 3 Max	Unit
I_{IH}	3010	45						5.5 V	CLOCK		50		50		50	μA
		46						"	I_0		20		20		20	"
		47						"	I_1		"		"		"	"
		48						"	I_2		"		"		"	"
		49						"	I_3		"		"		"	"
		50						"	I_4		"		"		"	"
		51						"	I_5		"		"		"	"
		52						"	I_6		"		"		"	"
		53						"	I_7		"		"		"	"
		54						"	$\overline{OE}$		50		50		50	"
I_I		55						"	CLOCK		0.2		0.2		0.2	mA
		56						"	I_0		0.1		0.1		0.1	"
		57						"	I_1		"		"		"	"
		58						"	I_2		"		"		"	"
		59						"	I_3		"		"		"	"
		60						"	I_4		"		"		"	"
		61						"	I_5		"		"		"	"
		62						"	I_6		"		"		"	"
		63						"	I_7		"		"		"	"
		64						"	$\overline{OE}$		0.2		0.2		0.2	"
		65						"	I/O_0		0.1		0.1		0.1	"
		66						"	I/O_1		"		"		"	"
		67				5.5 V		"	I/O_6		"		"		"	"
		68					5.5 V	"	I/O_7		"		"		"	"
I_O		69						"	I/O_0	-15	-125	-15	-125	-15	-125	"
		70						"	I/O_1	"	"	"	"	"	"	"
		71						"	O_2	"	"	"	"	"	"	"
		72	2.25 V					"	O_3	"	"	"	"	"	"	"
		73		2.25 V				"	O_4	"	"	"	"	"	"	"
		74			2.25 V			"	O_5	"	"	"	"	"	"	"
		75				2.25 V		"	I/O_6	"	"	"	"	"	"	"
		76					2.25 V	"	I/O_7	"	"	"	"	"	"	"
I_{OZH}		77						"	I/O_0		100		100		100	μA
		78						"	I/O_1		100		100		100	"
		79						"	O_2		20		20		20	"
		80	2.7 V					"	O_3		"		"		"	"
		81		2.7 V				"	O_4		"		"		"	"
		82			2.7 V			"	O_5		"		"		"	"
		83				2.7 V		"	I/O_6		100		100		100	"
		84					2.7 V	"	I/O_7		100		100		100	"
I_{OZL}		85						"	O_2		-20		-20		-20	"
		86	0.4 V					"	O_3		"		"		"	"
		87		0.4 V				"	O_4		"		"		"	"
		88			0.4 V			"	O_5		"		"		"	"
I_{CC}		89						"	V_{CC}		105		105		105	mA

TABLE III. Group A inspection for device type 03 - Continued.
Terminal conditions (pins not designated may be high ≥ 2.0 V, low ≤ 0.8 V, or open).

Symbol	MIL-STD-883 method	Cases R, 2 Test no.	1 CLK	2 I_0	3 I_1	4 I_2	5 I_3	6 I_4	7 I_5	8 I_6	9 I_7	10 GND	11 $\overline{OE}$	12 I/O_0	13 I/O_1	14 O_2
Functional tests	3014	90	2/	2/	2/	2/	2/	2/	2/	2/	2/	GND	2/	2/	2/	2/
t_{SU} 10/	3003	91	3/	3/	3/	3/	3/	3/	3/	3/	3/	GND	6/			4/ 8/
$t_{P(CL)}$ 10/		92	"	"	"	"	"	"	"	"	"	"	"			"
t_{PCL}		93	"	"	"	"	"	"	"	"	"	"	"			"
t_{PCH}		94	"	"	"	"	"	"	"	"	"	"	"			"
t_{PHL}		95	"	"	"	"	"	"	"	"	"	"		4/ 5/	4/ 5/	
t_{PLH}		96	"	"	"	"	"	"	"	"	"	"		4/ 5/	4/ 5/	
t_{PZH}		97	"	"	"	"	"	"	"	"	"	"	3/			4/ 8/
t_{PZL}		98	"	"	"	"	"	"	"	"	"	"	"			"
t_{PHZ}		99	"	"	"	"	"	"	"	"	"	"	"			"
t_{PLZ}		100	"	"	"	"	"	"	"	"	"	"	"			"
t_{PZH}		101	"	"	"	"	"	"	"	"	"	"		4/ 5/	4/ 5/	
t_{PZL}		102	"	"	"	"	"	"	"	"	"	"		"	"	
t_{PHZ}		103	"	"	"	"	"	"	"	"	"	"		"	"	
t_{PLZ}		104	"	"	"	"	"	"	"	"	"	"		"	"	
f_{MAX}		105	9/	9/	9/	9/	9/	9/	9/	9/	9/	"	6/			9/

See footnotes at end of table.

TABLE III. Group A inspection for device type 08 - Continued.
Terminal conditions (pins not designated may be high ≥ 2.0 V, low ≤ 0.8 V, or open).

Symbol	MIL-STD-883 method	Cases R, 2 Test no.	15 O_3	16 O_4	17 O_5	18 I/O_6	19 I/O_7	20 V_{CC}	Measured terminals	Test limits: Subgroup 7 T_C = +25°C Min	Subgroup 7 T_C = +25°C Max	Subgroup 8 T_C = +125°C Min	Subgroup 8 T_C = +125°C Max	Subgroup 8 T_C = -55°C Min	Subgroup 8 T_C = -55°C Max	Unit
Functional tests	3014	90	2/	2/	2/	2/	2/	5.5 V	All outputs		2/		2/		2/	
										Subgroup 9 T_C = +25°C Min	Subgroup 9 T_C = +25°C Max	Subgroup 10 T_C = +125°C Min	Subgroup 10 T_C = +125°C Max	Subgroup 11 T_C = -55°C Min	Subgroup 11 T_C = -55°C Max	
t_{SU} 10/	3003	91	4/ 8/	4/ 8/	4/ 8/			3/	All register outputs	25		25		25		ns
$t_{P(CL)}$ 10/		92	"	"	"			"	"	20		20		20		"
t_{PCL}		93	"	"	"			"	"		20		20		20	"
t_{PCH}		94	"	"	"			"	"		20		20		20	"
t_{PHL}		95				4/ 5/	4/ 5/	"	All I/O's		30		30		30	"
t_{PLH}		96				4/ 5/	4/ 5/	"	All I/O's		30		30		30	"
t_{PZH}		97	4/ 8/	4/ 8/	4/ 8/			"	All register outputs		25		25		25	"
t_{PZL}		98	"	"	"			"	"		"		"		"	"
t_{PHZ}		99	"	"	"			"	"		"		"		"	"
t_{PLZ}		100	"	"	"			"	"		"		"		"	"
t_{PZH}		101				4/ 5/	4/ 5/	"	All I/O's		30		30		30	"
t_{PZL}		102				"	"	"	"		"		"		"	"
t_{PHZ}		103				"	"	"	"		"		"		"	"
t_{PLZ}		104				"	"	"	"		"		"		"	"
f_{MAX}		105	9/	9/	9/			4.5 V	All register outputs	25		25		25		MHz

TABLE III. Group A inspection for device type 09.
Terminal conditions (pins not designated may be high ≥ 2.0 V, low ≤ 0.8 V, or open).

Symbol	MIL-STD-883 method	Cases R, 2 Test no.	1 I_0	2 I_1	3 I_2	4 I_3	5 I_4	6 I_5	7 I_6	8 I_7	9 I_8	10 GND	11 I_9	12 O_0	13 I/O_1	14 I/O_2
V_{IC}		1	-18 mA									GND				
		2		-18 mA								"				
		3			-18 mA							"				
		4				-18 mA						"				
		5					-18 mA					"				
		6						-18 mA				"				
		7							-18 mA			"				
		8								-18 mA		"				
		9									-18 mA	"				
		10										"	-18 mA			
		11										"			-18 mA	
		12										"				-18 mA
		13										"				
		14										"				
		15										"				
		16										"				
V_{OL}	3007	17	1/	1/	1/	1/	1/	1/	1/	1/	1/	"	1/	12 mA		
		18	"	"	"	"	"	"	"	"	"	"	"		12 mA	
		19	"	"	"	"	"	"	"	"	"	"	"			12 mA
		20	"	"	"	"	"	"	"	"	"	"	"			
		21	"	"	"	"	"	"	"	"	"	"	"			
		22	"	"	"	"	"	"	"	"	"	"	"			
		23	"	"	"	"	"	"	"	"	"	"	"			
		24	"	"	"	"	"	"	"	"	"	"	"			
V_{OH}	3006	25	"	"	"	"	"	"	"	"	"	"	"	-2 mA		
		26	"	"	"	"	"	"	"	"	"	"	"		-2 mA	
		27	"	"	"	"	"	"	"	"	"	"	"			-2 mA
		28	"	"	"	"	"	"	"	"	"	"	"			
		29	"	"	"	"	"	"	"	"	"	"	"			
		30	"	"	"	"	"	"	"	"	"	"	"			
		31	"	"	"	"	"	"	"	"	"	"	"			
		32	"	"	"	"	"	"	"	"	"	"	"			
I_{IL}	3009	33	0.4 V									"				
		34		0.4 V								"				
		35			0.4 V							"				
		36				0.4 V						"				
		37					0.4 V					"				
		38						0.4 V				"				
		39							0.4 V			"				
		40								0.4 V		"				
		41									0.4 V	"				
		42										"	0.4 V			
		43										"			0.4 V	
		44										"				0.4 V
		45										"				
		46										"				
		47										"				
		48										"				

See footnotes at end of table.

TABLE III. Group A inspection for device type 09 - Continued.
Terminal conditions (pins not designated may be high ≥ 2.0 V, low ≤ 0.8 V, or open).

Symbol	MIL-STD-883 method	Cases R, 2 Test no.	15 I/O_3	16 I/O_4	17 I/O_5	18 I/O_6	19 O_7	20 V_{CC}	Measured terminals	Test limits Subgroup 1 T_C = +25°C Min	Subgroup 1 Max	Subgroup 2 T_C = +125°C Min	Subgroup 2 Max	Subgroup 3 T_C = -55°C Min	Subgroup 3 Max	Unit
V_{IC}		1						4.5 V	I_0		-1.5		-1.5		-1.5	V
		2						"	I_1		"		"		"	"
		3						"	I_2		"		"		"	"
		4						"	I_3		"		"		"	"
		5						"	I_4		"		"		"	"
		6						"	I_5		"		"		"	"
		7						"	I_6		"		"		"	"
		8						"	I_7		"		"		"	"
		9						"	I_8		"		"		"	"
		10						"	I_9		"		"		"	"
		11						"	I/O_1		"		"		"	"
		12						"	I/O_2		"		"		"	"
		13	-18 mA					"	I/O_3		"		"		"	"
		14		-18 mA				"	I/O_4		"		"		"	"
		15			-18 mA			"	I/O_5		"		"		"	"
		16				-18 mA		"	I/O_6		"		"		"	"
V_{OL}	3007	17						"	O_0		0.5		0.5		0.5	"
		18						"	I/O_1		"		"		"	"
		19						"	I/O_2		"		"		"	"
		20	12 mA					"	I/O_3		"		"		"	"
		21		12 mA				"	I/O_4		"		"		"	"
		22			12 mA			"	I/O_5		"		"		"	"
		23				12 mA		"	I/O_6		"		"		"	"
		24					12 mA	"	O_7		"		"		"	"
V_{OH}	3006	25						"	O_0	2.4		2.4		2.4		"
		26						"	I/O_1	"		"		"		"
		27						"	I/O_2	"		"		"		"
		28	-2 mA					"	I/O_3	"		"		"		"
		29		-2 mA				"	I/O_4	"		"		"		"
		30			-2 mA			"	I/O_5	"		"		"		"
		31				-2 mA		"	I/O_6	"		"		"		"
		32					-2 mA	"	O_7	"		"		"		"
I_{IL}	3009	33						5.5 V	I_0		-0.25		-0.25		-0.25	mA
		34						"	I_1		"		"		"	"
		35						"	I_2		"		"		"	"
		36						"	I_3		"		"		"	"
		37						"	I_4		"		"		"	"
		38						"	I_5		"		"		"	"
		39						"	I_6		"		"		"	"
		40						"	I_7		"		"		"	"
		41						"	I_8		"		"		"	"
		42						"	I_9		"		"		"	"
		43						"	I/O_1		"		"		"	"
		44						"	I/O_2		"		"		"	"
		45	0.4 V					"	I/O_3		"		"		"	"
		46		0.4 V				"	I/O_4		"		"		"	"
		47			0.4 V			"	I/O_5		"		"		"	"
		48				0.4 V		"	I/O_6		"		"		"	"

TABLE III. Group A inspection for device type 09 - Continued.
Terminal conditions (pins not designated may be high ≥ 2.0 V, low ≤ 0.8 V, or open).

Symbol	MIL-STD-883 method	Cases R, 2 Test no.	1 I_0	2 I_1	3 I_2	4 I_3	5 I_4	6 I_5	7 I_6	8 I_7	9 I_8	10 GND	11 I_9	12 O_0	13 I/O_1	14 I/O_2
I_{IH}	3010	49	2.7 V									GND				
		50		2.7 V								"				
		51			2.7 V							"				
		52				2.7 V						"				
		53					2.7 V					"				
		54						2.7 V				"				
		55							2.7 V			"				
		56								2.7 V		"				
		57									2.7 V	"				
		58										"	2.7 V			
I_I		59	5.5 V									"				
		60		5.5 V								"				
		61			5.5 V							"				
		62				5.5 V						"				
		63					5.5 V					"				
		64						5.5 V				"				
		65							5.5 V			"				
		66								5.5 V		"				
		67									5.5 V	"				
		68										"	5.5 V			
		69										"			5.5 V	
		70										"				5.5 V
		71										"				
		72										"				
		73										"				
		74										"				
I_O		75	1/	1/	1/	1/	1/	1/	1/	1/	1/	"	1/	2.25 V		
		76	"	"	"	"	"	"	"	"	"	"	"		2.25 V	
		77	"	"	"	"	"	"	"	"	"	"	"			2.25 V
		78	"	"	"	"	"	"	"	"	"	"	"			
		79	"	"	"	"	"	"	"	"	"	"	"			
		80	"	"	"	"	"	"	"	"	"	"	"			
		81	"	"	"	"	"	"	"	"	"	"	"			
		82	"	"	"	"	"	"	"	"	"	"	"			
I_{OZH}		83	"	"	"	"	"	"	"	"	"	"	"	2.7 V		
		84	"	"	"	"	"	"	"	"	"	"	"		2.7 V	
		85	"	"	"	"	"	"	"	"	"	"	"			2.7 V
		86	"	"	"	"	"	"	"	"	"	"	"			
		87	"	"	"	"	"	"	"	"	"	"	"			
		88	"	"	"	"	"	"	"	"	"	"	"			
		89	"	"	"	"	"	"	"	"	"	"	"			
		90	"	"	"	"	"	"	"	"	"	"	"			
I_{OZL}		91	"	"	"	"	"	"	"	"	"	"	"	0.4 V		
		92	"	"	"	"	"	"	"	"	"	"	"			
I_{CC}	3005	93										"				

See footnotes at end of table.

TABLE III. Group A inspection for device type 09 - Continued.
Terminal conditions (pins not designated may be high ≥ 2.0 V, low ≤ 0.8 V, or open).

Symbol	MIL-STD-883 method	Cases R, Z Test no.	15 I/O_3	16 I/O_4	17 I/O_5	18 I/O_6	19 O_7	20 V_{CC}	Measured terminals	Test limits: Subgroup 1 T_C = +25°C Min	Subgroup 1 Max	Subgroup 2 T_C = +125°C Min	Subgroup 2 Max	Subgroup 3 T_C = -55°C Min	Subgroup 3 Max	Unit
I_{IH}	3010	49						5.5 V	I_0		50		50		50	μA
		50						"	I_1		20		20		20	"
		51						"	I_2		"		"		"	"
		52						"	I_3		"		"		"	"
		53						"	I_4		"		"		"	"
		54						"	I_5		"		"		"	"
		55						"	I_6		"		"		"	"
		56						"	I_7		"		"		"	"
		57						"	I_8		"		"		"	"
		58						"	I_9		50		50		50	"
I_I		59						"	I_0		0.2		0.2		0.2	mA
		60						"	I_1		0.1		0.1		0.1	"
		61						"	I_2		"		"		"	"
		62						"	I_3		"		"		"	"
		63						"	I_4		"		"		"	"
		64						"	I_5		"		"		"	"
		65						"	I_6		"		"		"	"
		66						"	I_7		"		"		"	"
		67						"	I_8		"		"		"	"
		68						"	I_9		0.2		0.2		0.2	"
		69						"	I/O_1		0.1		0.1		0.1	"
		70						"	I/O_2		"		"		"	"
		71	5.5 V					"	I/O_3		"		"		"	"
		72		5.5 V				"	I/O_4		"		"		"	"
		73			5.5 V			"	I/O_5		"		"		"	"
		74				5.5 V		"	I/O_6		"		"		"	"
I_O		75						"	O_0	-15	-125	-15	-125	-15	-125	"
		76						"	I/O_1	"	"	"	"	"	"	"
		77						"	I/O_2	"	"	"	"	"	"	"
		78	2.25 V					"	I/O_3	"	"	"	"	"	"	"
		79		2.25 V				"	I/O_4	"	"	"	"	"	"	"
		80			2.25 V			"	I/O_5	"	"	"	"	"	"	"
		81				2.25 V		"	I/O_6	"	"	"	"	"	"	"
		82					2.25 V	"	O_7	"	"	"	"	"	"	"
I_{OZH}		83						"	O_0		20		20		20	μA
		84						"	I/O_1		100		100		100	"
		85						"	I/O_2		"		"		"	"
		86	2.7 V					"	I/O_3		"		"		"	"
		87		2.7 V				"	I/O_4		"		"		"	"
		88			2.7 V			"	I/O_5		"		"		"	"
		89				2.7 V		"	I/O_6		"		"		"	"
		90					2.7 V	"	O_7		20		20		20	"
I_{OZL}		91						"	O_0		-20		-20		-20	"
		92					0.4 V	"	O_7		-20		-20		-20	"
I_{CC}	3005	93						"	V_{CC}		220		220		220	mA

TABLE III. Group A inspection for device type 09 - Continued.
Terminal conditions (pins not designated may be high ≥ 2.0 V, low ≤ 0.8 V, or open).

Symbol	MIL-STD-883 method	Cases R, 2 Test no.	1 I_0	2 I_1	3 I_2	4 I_3	5 I_4	6 I_5	7 I_6	8 I_7	9 I_8	10 GND	11 I_9	12 O_0	13 I/O_1	14 I/O_2
Functional tests	3014	94	2/	2/	2/	2/	2/	2/	2/	2/	2/	GND	2/	2/	2/	2/
t_{PHL}	3003	95	3/	3/	3/	3/	3/	3/	3/	3/	3/	GND	3/	4/ 5/	4/ 5/	4/ 5/
t_{PLH}		96	"	"	"	"	"	"	"	"	"	"	"	"	"	"
t_{PZH}		97	"	"	"	"	"	"	"	"	"	"	"	"	"	"
t_{PZL}		98	"	"	"	"	"	"	"	"	"	"	"	"	"	"
t_{PHZ}		99	"	"	"	"	"	"	"	"	"	"	"	"	"	"
t_{PLZ}		100	"	"	"	"	"	"	"	"	"	"	"	"	"	"

See footnotes at end of table.

TABLE III. Group A inspection for device type 09 - Continued.
Terminal conditions (pins not designated may be high ≥ 2.0 V, low ≤ 0.8 V, or open).

Symbol	MIL-STD-883 method	Cases R, 2 Test no.	15 I/O_3	16 I/O_4	17 I/O_5	18 I/O_6	19 O_7	20 V_{CC}	Measured terminals	Test limits: Subgroup 7 T_C = +25°C Min	Subgroup 7 Max	Subgroup 8 T_C = +125°C Min	Subgroup 8 Max	Subgroup 8 T_C = -55°C Min	Subgroup 8 Max	Unit
Functional tests	3014	94	2/	2/	2/	2/	2/	5.5 V	All outputs		2/		2/		2/	
										Subgroup 9 T_C = +25°C Min	Subgroup 9 Max	Subgroup 10 T_C = +125°C Min	Subgroup 10 Max	Subgroup 11 T_C = -55°C Min	Subgroup 11 Max	
t_{PHL}	3003	95	4/ 5/	4/ 5/	4/ 5/	4/ 5/	4/ 5/	3/	All outputs		15		15		15	ns
t_{PLH}		96	"	"	"	"	"	"	"		"		"		"	"
t_{PZH}		97	"	"	"	"	"	"	"		"		"		"	"
t_{PZL}		98	"	"	"	"	"	"	"		"		"		"	"
t_{PHZ}		99	"	"	"	"	"	"	"		"		"		"	"
t_{PLZ}		100	"	"	"	"	"	"	"		"		"		"	"

TABLE III. Group A inspection for device type 10.
Terminal conditions (pins not designated may be high ≥ 2.0 V, low ≤ 0.8 V, or open).

Symbol	MIL-STD-883 method	Cases R, 2	1	2	3	4	5	6	7	8	9	10	11	12	13	14
		Test no.	CLK	I_0	I_1	I_2	I_3	I_4	I_5	I_6	I_7	GND	$\overline{OE}$	O_0	O_1	O_2
V_{IC}		1	-18 mA									GND				
		2		-18 mA								"				
		3			-18 mA							"				
		4				-18 mA						"				
		5					-18 mA					"				
		6						-18 mA				"				
		7							-18 mA			"				
		8								-18 mA		"				
		9									-18 mA	"				
		10										"	-18 mA			
V_{OL}	3007	11	1/	1/	1/	1/	1/	1/	1/	1/	1/	"	1/ 6/	12 mA	12 mA	12 mA
		12	"	"	"	"	"	"	"	"	"	"	"			
		13	"	"	"	"	"	"	"	"	"	"	"			
		14	"	"	"	"	"	"	"	"	"	"	"			
		15	"	"	"	"	"	"	"	"	"	"	"			
		16	"	"	"	"	"	"	"	"	"	"	"			
		17	"	"	"	"	"	"	"	"	"	"	"			
		18	"	"	"	"	"	"	"	"	"	"	"			
V_{OH}	3006	19	"	"	"	"	"	"	"	"	"	"	"	-2 mA	-2 mA	-2 mA
		20	"	"	"	"	"	"	"	"	"	"	"			
		21	"	"	"	"	"	"	"	"	"	"	"			
		22	"	"	"	"	"	"	"	"	"	"	"			
		23	"	"	"	"	"	"	"	"	"	"	"			
		24	"	"	"	"	"	"	"	"	"	"	"			
		25	"	"	"	"	"	"	"	"	"	"	"			
		26	"	"	"	"	"	"	"	"	"	"	"			
I_{IL}	3009	27	0.4 V									"				
		28		0.4 V								"				
		29			0.4 V							"				
		30				0.4 V						"				
		31					0.4 V					"				
		32						0.4 V				"				
		33							0.4 V			"				
		34								0.4 V		"				
		35									0.4 V	"				
		36										"	0.4 V			

See footnotes at end of table.

TABLE III. Group A inspection for device type 10 - Continued.
Terminal conditions (pins not designated may be high ≥ 2.0 V, low ≤ 0.8 V, or open).

Symbol	MIL-STD-883 method	Cases R, 2 Test no.	15 O_3	16 O_4	17 O_5	18 O_6	19 O_7	20 V_{CC}	Measured terminals	Test limits: Subgroup 1 T_C = +25°C Min	Subgroup 1 Max	Subgroup 2 T_C = +125°C Min	Subgroup 2 Max	Subgroup 3 T_C = -55°C Min	Subgroup 3 Max	Unit
V_{IC}		1						4.5 V	CLOCK		-1.5		-1.5		-1.5	V
		2						"	I_0		"		"		"	"
		3						"	I_1		"		"		"	"
		4						"	I_2		"		"		"	"
		5						"	I_3		"		"		"	"
		6						"	I_4		"		"		"	"
		7						"	I_5		"		"		"	"
		8						"	I_6		"		"		"	"
		9						"	I_7		"		"		"	"
		10						"	$\overline{OE}$		"		"		"	"
V_{OL}	3007	11						"	O_0		0.5		0.5		0.5	"
		12						"	O_1		"		"		"	"
		13						"	O_2		"		"		"	"
		14	12 mA					"	O_3		"		"		"	"
		15		12 mA				"	O_4		"		"		"	"
		16			12 mA			"	O_5		"		"		"	"
		17				12 mA		"	O_6		"		"		"	"
		18					12 mA	"	O_7		"		"		"	"
V_{OH}	3006	19						"	O_0	2.4		2.4		2.4		"
		20						"	O_1	"		"		"		"
		21						"	O_2	"		"		"		"
		22	-2 mA					"	O_3	"		"		"		"
		23		-2 mA				"	O_4	"		"		"		"
		24			-2 mA			"	O_5	"		"		"		"
		25				-2 mA		"	O_6	"		"		"		"
		26					-2 mA	"	O_7	"		"		"		"
I_{IL}	3009	27						5.5 V	CLOCK		-0.25		-0.25		-0.25	mA
		28						"	I_0		"		"		"	"
		29						"	I_1		"		"		"	"
		30						"	I_2		"		"		"	"
		31						"	I_3		"		"		"	"
		32						"	I_4		"		"		"	"
		33						"	I_5		"		"		"	"
		34						"	I_6		"		"		"	"
		35						"	I_7		"		"		"	"
		36						"	$\overline{OE}$		"		"		"	"

TABLE III. Group A inspection for device type 10 - Continued.
Terminal conditions (pins not designated may be high ≥ 2.0 V, low ≤ 0.8 V, or open).

Symbol	MIL-STD-883 method	Cases R, 2 Test no.	1 CLK	2 I_0	3 I_1	4 I_2	5 I_3	6 I_4	7 I_5	8 I_6	9 I_7	10 GND	11 $\overline{OE}$	12 O_0	13 O_1	14 O_2
I_{IH}	3010	37	2.7 V									GND				
		38		2.7 V								"				
		39			2.7 V							"				
		40				2.7 V						"				
		41					2.7 V					"				
		42						2.7 V				"				
		43							2.7 V			"				
		44								2.7 V		"				
		45									2.7 V	"				
		46										"	2.7 V			
I_I		47	5.5 V									"				
		48		5.5 V								"				
		49			5.5 V							"				
		50				5.5 V						"				
		51					5.5 V					"				
		52						5.5 V				"				
		53							5.5 V			"				
		54								5.5 V		"				
		55									5.5 V	"				
		56										"	5.5 V			
I_O		57	1/	1/	1/	1/	1/	1/	1/	1/	1/	"	1/ 6/	2.25 V		
		58	"	"	"	"	"	"	"	"	"	"	"		2.25 V	
		59	"	"	"	"	"	"	"	"	"	"	"			2.25 V
		60	"	"	"	"	"	"	"	"	"	"	"			
		61	"	"	"	"	"	"	"	"	"	"	"			
		62	"	"	"	"	"	"	"	"	"	"	"			
		63	"	"	"	"	"	"	"	"	"	"	"			
		64	"	"	"	"	"	"	"	"	"	"	"			
I_{OZH}		65	"	"	"	"	"	"	"	"	"	"	1/ 7/	2.7 V		
		66	"	"	"	"	"	"	"	"	"	"	"		2.7 V	
		67	"	"	"	"	"	"	"	"	"	"	"			2.7 V
		68	"	"	"	"	"	"	"	"	"	"	"			
		69	"	"	"	"	"	"	"	"	"	"	"			
		70	"	"	"	"	"	"	"	"	"	"	"			
		71	"	"	"	"	"	"	"	"	"	"	"			
		72	"	"	"	"	"	"	"	"	"	"	"			
I_{OZL}		73	"	"	"	"	"	"	"	"	"	"	"	0.4 V		
		74	"	"	"	"	"	"	"	"	"	"	"		0.4 V	
		75	"	"	"	"	"	"	"	"	"	"	"			0.4 V
		76	"	"	"	"	"	"	"	"	"	"	"			
		77	"	"	"	"	"	"	"	"	"	"	"			
		78	"	"	"	"	"	"	"	"	"	"	"			
		79	"	"	"	"	"	"	"	"	"	"	"			
		80	"	"	"	"	"	"	"	"	"	"	"			
I_{CC}	3005	81										"				

See footnotes at end of table.

TABLE III. Group A inspection for device type 10 - Continued.
Terminal conditions (pins not designated may be high ≥ 2.0 V, low ≤ 0.8 V, or open).

Symbol	MIL-STD-883 method	Cases R, S Test no.	15 O_3	16 O_4	17 O_5	18 O_6	19 O_7	20 V_{CC}	Measured terminals	Test limits: Subgroup 1 T_C = +25°C Min	Subgroup 1 Max	Subgroup 2 T_C = +125°C Min	Subgroup 2 Max	Subgroup 3 T_C = -55°C Min	Subgroup 3 Max	Unit
I_{IH}	3010	37						5.5 V	CLOCK		50		50		50	μA
		38						"	I_0		20		20		20	"
		39						"	I_1		"		"		"	"
		40						"	I_2		"		"		"	"
		41						"	I_3		"		"		"	"
		42						"	I_4		"		"		"	"
		43						"	I_5		"		"		"	"
		44						"	I_6		"		"		"	"
		45						"	I_7		"		"		"	"
		46						"	$\overline{OE}$		50		50		50	"
I_I		47						"	CLOCK		0.2		0.2		0.2	mA
		48						"	I_0		0.1		0.1		0.1	"
		49						"	I_1		"		"		"	"
		50						"	I_2		"		"		"	"
		51						"	I_3		"		"		"	"
		52						"	I_4		"		"		"	"
		53						"	I_5		"		"		"	"
		54						"	I_6		"		"		"	"
		55						"	I_7		"		"		"	"
		56						"	$\overline{OE}$		0.2		0.2		0.2	"
I_O		57						"	O_0	-15	-125	-15	-125	-15	-125	"
		58						"	O_1	"	"	"	"	"	"	"
		59						"	O_2	"	"	"	"	"	"	"
		60	2.25 V					"	O_3	"	"	"	"	"	"	"
		61		2.25 V				"	O_4	"	"	"	"	"	"	"
		62			2.25 V			"	O_5	"	"	"	"	"	"	"
		63				2.25 V		"	O_6	"	"	"	"	"	"	"
		64					2.25 V	"	O_7	"	"	"	"	"	"	"
I_{OZH}		65						"	O_0		20		20		20	μA
		66						"	O_1		"		"		"	"
		67						"	O_2		"		"		"	"
		68	2.7 V					"	O_3		"		"		"	"
		69		2.7 V				"	O_4		"		"		"	"
		70			2.7 V			"	O_5		"		"		"	"
		71				2.7 V		"	O_6		"		"		"	"
		72					2.7 V	"	O_7		"		"		"	"
I_{OZL}		73						"	O_0		-20		-20		-20	"
		74						"	O_1		"		"		"	"
		75						"	O_2		"		"		"	"
		76	0.4 V					"	O_3		"		"		"	"
		77		0.4 V				"	O_4		"		"		"	"
		78			0.4 V			"	O_5		"		"		"	"
		79				0.4 V		"	O_6		"		"		"	"
		80					0.4 V	"	O_7		"		"		"	"
I_{CC}	3005	81						"	V_{CC}		220		220		220	mA

TABLE III. Group A inspection for device type 10 - Continued.
Terminal conditions (pins not designated may be high ≥ 2.0 V, low ≤ 0.8 V, or open).

Symbol	MIL-STD-883 method	Cases R, 2 Test no.	1	2	3	4	5	6	7	8	9	10	11	12	13	14
			CLK	I_0	I_1	I_2	I_3	I_4	I_5	I_6	I_7	GND	$\overline{OE}$	O_0	O_1	O_2
Functional tests	3014	82	2/	2/	2/	2/	2/	2/	2/	2/	2/	GND	2/	2/	2/	2/
t_{SU} 10/	3003	83	3/	3/	3/	3/	3/	3/	3/	3/	3/	GND	6/	4/ 8/	4/ 8/	4/ 8/
$t_{P(CL)}$ 10/		84	"	"	"	"	"	"	"	"	"	"	"	"	"	"
t_{PCH}		85	"	"	"	"	"	"	"	"	"	"	"	"	"	"
t_{PCL}		86	"	"	"	"	"	"	"	"	"	"	"	"	"	"
t_{PZH}		87	"	"	"	"	"	"	"	"	"	"	3/	"	"	"
t_{PZL}		88	"	"	"	"	"	"	"	"	"	"	"	"	"	"
t_{PHZ}		89	"	"	"	"	"	"	"	"	"	"	"	"	"	"
t_{PLZ}		90	"	"	"	"	"	"	"	"	"	"	"	"	"	"
f_{MAX}		91	9/	9/	9/	9/	9/	9/	9/	9/	9/	"	6/	9/	9/	9/

See footnotes at end of table.

TABLE III. Group A inspection for device type 10 - Continued.
Terminal conditions (pins not designated may be high ≥ 2.0 V, low ≤ 0.8 V, or open).

Symbol	MIL-STD-883 method	Cases R, 2	15	16	17	18	19	20	Measured terminals	Test limits						Unit
										Subgroup 7 T_C = +25°C		Subgroup 8 T_C = +125°C		Subgroup 8 T_C = -55°C		
		Test no.	O_3	O_4	O_5	O_6	O_7	V_{CC}		Min	Max	Min	Max	Min	Max	
Functional tests	3014	82	2/	2/	2/	2/	2/	5.5 V	All outputs		2/		2/		2/	
										Subgroup 9 T_C = +25°C		Subgroup 10 T_C = +125°C		Subgroup 11 T_C = -55°C		
										Min	Max	Min	Max	Min	Max	
t_{SU} 10/	3003	83	4/ 8/	4/ 8/	4/ 8/	4/ 8/	4/ 8/	3/	All register outputs	15		15		15		ns
$t_{P(CL)}$ 10/		84	"	"	"	"	"	"	"	10		10		10		"
t_{PCH}		85	"	"	"	"	"	"	"		12		12		12	"
t_{PCL}		86	"	"	"	"	"	"	"		"		"		"	"
t_{PZH}		87	"	"	"	"	"	"	"		"		"		"	"
t_{PZL}		88	"	"	"	"	"	"	"		"		"		"	"
t_{PHZ}		89	"	"	"	"	"	"	"		"		"		"	"
t_{PLZ}		90	"	"	"	"	"	"	"		"		"		"	"
f_{MAX}		91	9/	9/	9/	9/	9/	4.5 V	"	50		50		50		MHz

TABLE III. Group A inspection for device type 11.
Terminal conditions (pins not designated may be high ≥2.0 V, low ≤0.8 V, or open).

Symbol	MIL-STD-883 method	Cases R, 2	1	2	3	4	5	6	7	8	9	10	11	12	13	14
		Test no.	CLK	I_0	I_1	I_2	I_3	I_4	I_5	I_6	I_7	GND	$\overline{OE}$	I/O_0	O_1	O_2
V_{IC}		1	-18 mA									GND				
		2		-18 mA								"				
		3			-18 mA							"				
		4				-18 mA						"				
		5					-18 mA					"				
		6						-18 mA				"				
		7							-18 mA			"				
		8								-18 mA		"				
		9									-18 mA	"				
		10										"	-18 mA			
		11										"		-18 mA		
		12										"				
V_{OL}	3007	13	1/	1/	1/	1/	1/	1/	1/	1/	1/	"	1/ 6/	12 mA		
		14	"	"	"	"	"	"	"	"	"	"	"		12 mA	
		15	"	"	"	"	"	"	"	"	"	"	"			12 mA
		16	"	"	"	"	"	"	"	"	"	"	"			
		17	"	"	"	"	"	"	"	"	"	"	"			
		18	"	"	"	"	"	"	"	"	"	"	"			
		19	"	"	"	"	"	"	"	"	"	"	"			
		20	"	"	"	"	"	"	"	"	"	"	"			
V_{OH}	3006	21	"	"	"	"	"	"	"	"	"	"	"	-2 mA		
		22	"	"	"	"	"	"	"	"	"	"	"		-2 mA	
		23	"	"	"	"	"	"	"	"	"	"	"			-2 mA
		24	"	"	"	"	"	"	"	"	"	"	"			
		25	"	"	"	"	"	"	"	"	"	"	"			
		26	"	"	"	"	"	"	"	"	"	"	"			
		27	"	"	"	"	"	"	"	"	"	"	"			
		28	"	"	"	"	"	"	"	"	"	"	"			
I_{IL}	3009	29	0.4 V									"				
		30		0.4 V								"				
		31			0.4 V							"				
		32				0.4 V						"				
		33					0.4 V					"				
		34						0.4 V				"				
		35							0.4 V			"				
		36								0.4 V		"				
		37									0.4 V	"				
		38										"	0.4 V			
		39										"		0.4 V		
		40										"				

See footnotes at end of table.

TABLE III. Group A inspection for device type 11 - Continued.
Terminal conditions (pins not designated may be high ≥2.0 V, low ≤0.8 V, or open).

Symbol	MIL-STD-883 method	Cases R, 2 Test no.	15 O_3	16 O_4	17 O_5	18 O_6	19 I/O_7	20 V_{CC}	Measured terminals	Test limits: Subgroup 1 T_C = +25°C Min	Subgroup 1 Max	Subgroup 2 T_C = +125°C Min	Subgroup 2 Max	Subgroup 3 T_C = -55°C Min	Subgroup 3 Max	Unit
V_{IC}		1						4.5 V	CLOCK		-1.5		-1.5		-1.5	V
		2						"	I_0		"		"		"	"
		3						"	I_1		"		"		"	"
		4						"	I_2		"		"		"	"
		5						"	I_3		"		"		"	"
		6						"	I_4		"		"		"	"
		7						"	I_5		"		"		"	"
		8						"	I_6		"		"		"	"
		9						"	I_7		"		"		"	"
		10						"	$\overline{OE}$		"		"		"	"
		11						"	I/O_0		"		"		"	"
		12					-18 mA	"	I/O_7		"		"		"	"
V_{OL}	3007	13						"	I/O_0		0.5		0.5		0.5	"
		14						"	O_1		"		"		"	"
		15						"	O_2		"		"		"	"
		16	12 mA					"	O_3		"		"		"	"
		17		12 mA				"	O_4		"		"		"	"
		18			12 mA			"	O_5		"		"		"	"
		19				12 mA		"	O_6		"		"		"	"
		20					12 mA	"	I/O_7		"		"		"	"
V_{OH}	3006	21						"	I/O_0	2.4		2.4		2.4		"
		22						"	O_1	"		"		"		"
		23						"	O_2	"		"		"		"
		24	-2 mA					"	O_3	"		"		"		"
		25		-2 mA				"	O_4	"		"		"		"
		26			-2 mA			"	O_5	"		"		"		"
		27				-2 mA		"	O_6	"		"		"		"
		28					-2 mA	"	I/O_7	"		"		"		"
I_{IL}	3009	29						5.5 V	CLOCK		-0.25		-0.25		-0.25	mA
		30						"	I_0		"		"		"	"
		31						"	I_1		"		"		"	"
		32						"	I_2		"		"		"	"
		33						"	I_3		"		"		"	"
		34						"	I_4		"		"		"	"
		35						"	I_5		"		"		"	"
		36						"	I_6		"		"		"	"
		37						"	I_7		"		"		"	"
		38						"	$\overline{OE}$		"		"		"	"
		39						"	I/O_0		"		"		"	"
		40					0.4 V	"	I/O_7		"		"		"	"

TABLE III. Group A inspection for device type 11 - Continued.
Terminal conditions (pins not designated may be high ≥2.0 V, low ≤0.8 V, or open).

Symbol	MIL-STD-883 method	Cases R, 2 Test no.	1 CLK	2 I_0	3 I_1	4 I_2	5 I_3	6 I_4	7 I_5	8 I_6	9 I_7	10 GND	11 $\overline{OE}$	12 I/O_0	13 O_1	14 O_2
I_{IH}	3010	41	2.7 V									GND				
		42		2.7 V								"				
		43			2.7 V							"				
		44				2.7 V						"				
		45					2.7 V					"				
		46						2.7 V				"				
		47							2.7 V			"				
		48								2.7 V		"				
		49									2.7 V	"				
		50										"	2.7 V			
I_I		51	5.5 V									"				
		52		5.5 V								"				
		53			5.5 V							"				
		54				5.5 V						"				
		55					5.5 V					"				
		56						5.5 V				"				
		57							5.5 V			"				
		58								5.5 V		"				
		59									5.5 V	"				
		60										"	5.5 V			
		61										"		5.5 V		
		62										"				
I_O		63	1/	1/	1/	1/	1/	1/	1/	1/	1/	"	1/ 6/	2.25 V		
		64	"	"	"	"	"	"	"	"	"	"	"		2.25 V	
		65	"	"	"	"	"	"	"	"	"	"	"			2.25 V
		66	"	"	"	"	"	"	"	"	"	"	"			
		67	"	"	"	"	"	"	"	"	"	"	"			
		68	"	"	"	"	"	"	"	"	"	"	"			
		69	"	"	"	"	"	"	"	"	"	"	"			
		70	"	"	"	"	"	"	"	"	"	"	"			
I_{OZH}		71	"	"	"	"	"	"	"	"	"	"	1/ 7/	2.7 V		
		72	"	"	"	"	"	"	"	"	"	"	"		2.7 V	
		73	"	"	"	"	"	"	"	"	"	"	"			2.7 V
		74	"	"	"	"	"	"	"	"	"	"	"			
		75	"	"	"	"	"	"	"	"	"	"	"			
		76	"	"	"	"	"	"	"	"	"	"	"			
		77	"	"	"	"	"	"	"	"	"	"	"			
		78	"	"	"	"	"	"	"	"	"	"	"			
I_{OZL}		79	"	"	"	"	"	"	"	"	"	"	"		0.4 V	
		80	"	"	"	"	"	"	"	"	"	"	"			0.4 V
		81	"	"	"	"	"	"	"	"	"	"	"			
		82	"	"	"	"	"	"	"	"	"	"	"			
		83	"	"	"	"	"	"	"	"	"	"	"			
		84	"	"	"	"	"	"	"	"	"	"	"			
I_{CC}	3005	85										"				

See footnotes at end of table.

TABLE III. Group A inspection for device type 11 - Continued.
Terminal conditions (pins not designated may be high ≥2.0 V, low ≤0.8 V, or open).

Symbol	MIL-STD-883 method	Cases R, 2 Test no.	15 O_3	16 O_4	17 O_5	18 O_6	19 I/O_7	20 V_{CC}	Measured terminals	Test limits: Subgroup 1 T_C = +25°C Min	Subgroup 1 Max	Subgroup 2 T_C = +125°C Min	Subgroup 2 Max	Subgroup 3 T_C = -55°C Min	Subgroup 3 Max	Unit
I_{IH}	3010	41						5.5 V	CLOCK		50		50		50	μA
		42						"	I_0		20		20		20	"
		43						"	I_1		"		"		"	"
		44						"	I_2		"		"		"	"
		45						"	I_3		"		"		"	"
		46						"	I_4		"		"		"	"
		47						"	I_5		"		"		"	"
		48						"	I_6		"		"		"	"
		49						"	I_7		"		"		"	"
		50						"	$\overline{OE}$		50		50		50	"
I_I		51						"	CLOCK		0.2		0.2		0.2	mA
		52						"	I_0		0.1		0.1		0.1	"
		53						"	I_1		"		"		"	"
		54						"	I_2		"		"		"	"
		55						"	I_3		"		"		"	"
		56						"	I_4		"		"		"	"
		57						"	I_5		"		"		"	"
		58						"	I_6		"		"		"	"
		59						"	I_7		"		"		"	"
		60						"	$\overline{OE}$		0.2		0.2		0.2	"
		61						"	I/O_0		0.1		0.1		0.1	"
		62					5.5 V	"	I/O_7		0.1		0.1		0.1	"
I_O		63						"	I/O_0	-15	-125	-15	-125	-15	-125	"
		64						"	O_1	"	"	"	"	"	"	"
		65						"	O_2	"	"	"	"	"	"	"
		66	2.25 V					"	O_3	"	"	"	"	"	"	"
		67		2.25 V				"	O_4	"	"	"	"	"	"	"
		68			2.25 V			"	O_5	"	"	"	"	"	"	"
		69				2.25 V		"	O_6	"	"	"	"	"	"	"
		70					2.25 V	"	I/O_7	"	"	"	"	"	"	"
I_{OZH}		71						"	I/O_0		100		100		100	μA
		72						"	O_1		20		20		20	"
		73						"	O_2		"		"		"	"
		74	2.7 V					"	O_3		"		"		"	"
		75		2.7 V				"	O_4		"		"		"	"
		76			2.7 V			"	O_5		"		"		"	"
		77				2.7 V		"	O_6		"		"		"	"
		78					2.7 V	"	I/O_7		100		100		100	"
I_{OZL}		79						"	O_1		-20		-20		-20	"
		80						"	O_2		"		"		"	"
		81	0.4 V					"	O_3		"		"		"	"
		82		0.4 V				"	O_4		"		"		"	"
		83			0.4 V			"	O_5		"		"		"	"
		84				0.4 V		"	O_6		"		"		"	"
I_{CC}		85						"	V_{CC}		220		220		220	mA

TABLE III. Group A inspection for device type 11 - Continued.
Terminal conditions (pins not designated may be high ≥2.0 V, low ≤0.8 V, or open).

Symbol	MIL-STD-883 method	Cases R, 2 Test no.	1 CLK	2 I_0	3 I_1	4 I_2	5 I_3	6 I_4	7 I_5	8 I_6	9 I_7	10 GND	11 $\overline{OE}$	12 I/O_0	13 O_1	14 O_2
Functional tests	3014	86	2/	2/	2/	2/	2/	2/	2/	2/	2/	GND	2/	2/	2/	2/
t_{SU} 10/	3003	87	3/	3/	3/	3/	3/	3/	3/	3/	3/	GND	6/		4/ 8/	4/ 8/
$t_{P(CL)}$ 10/		88	"	"	"	"	"	"	"	"	"	"	"		"	"
t_{PCL}		89	"	"	"	"	"	"	"	"	"	"	"		"	"
t_{PCH}		90	"	"	"	"	"	"	"	"	"	"	"		"	"
t_{PHL}		91	"	"	"	"	"	"	"	"	"	"		4/ 5/		
t_{PLH}		92	"	"	"	"	"	"	"	"	"	"		4/ 5/		
t_{PZH}		93	"	"	"	"	"	"	"	"	"	"	3/		4/ 8/	4/ 8/
t_{PZL}		94	"	"	"	"	"	"	"	"	"	"	"		"	"
t_{PHZ}		95	"	"	"	"	"	"	"	"	"	"	"		"	"
t_{PLZ}		96	"	"	"	"	"	"	"	"	"	"	"		"	"
t_{PZH}		97	"	"	"	"	"	"	"	"	"	"		4/ 5/		
t_{PZL}		98	"	"	"	"	"	"	"	"	"	"		"		
t_{PHZ}		99	"	"	"	"	"	"	"	"	"	"		"		
t_{PLZ}		100	"	"	"	"	"	"	"	"	"	"		"		
f_{MAX}		101	9/	9/	9/	9/	9/	9/	9/	9/	9/	"	6/		9/	9/

See footnotes at end of table.

TABLE III. Group A inspection for device type 11 - Continued.
Terminal conditions (pins not designated may be high ≥2.0 V, low ≤0.8 V, or open).

Symbol	MIL-STD-883 method	Cases R, 2 Test no.	15 O_3	16 O_4	17 O_5	18 O_6	19 I/O_7	20 V_{CC}	Measured terminals	Test limits: Subgroup 7 T_C = +25°C Min	Subgroup 7 Max	Subgroup 8 T_C = +125°C Min	Subgroup 8 Max	Subgroup 8 T_C = -55°C Min	Subgroup 8 Max	Unit
Functional tests	3014	86	2/	2/	2/	2/	2/	5.5 V	All outputs		2/		2/		2/	
										Subgroup 9 T_C = +25°C Min	Subgroup 9 Max	Subgroup 10 T_C = +125°C Min	Subgroup 10 Max	Subgroup 11 T_C = -55°C Min	Subgroup 11 Max	
t_{SU} 10/	3003	87	4/ 8/	4/ 8/	4/ 8/	4/ 8/		3/	All register outputs	15		15		15		ns
$t_{P(CL)}$ 10/		88	"	"	"	"		"	"	10		10		10		"
t_{PCL}		89	"	"	"	"		"	"		12		12		12	"
t_{PCH}		90	"	"	"	"		"	"		12		12		12	"
t_{PHL}		91					4/ 5/	"	All I/O's		15		15		15	"
t_{PLH}		92					4/ 5/	"	All I/O's		15		15		15	"
t_{PZH}		93	4/ 8/	4/ 8/	4/ 8/	4/ 8/		"	All register outputs		12		12		12	"
t_{PZL}		94	"	"	"	"		"	"		"		"		"	"
t_{PHZ}		95	"	"	"	"		"	"		"		"		"	"
t_{PLZ}		96	"	"	"	"		"	"		"		"		"	"
t_{PZH}		97					4/ 5/	"	All I/O's		15		15		15	"
t_{PZL}		98					"	"	"		"		"		"	"
t_{PHZ}		99					"	"	"		"		"		"	"
t_{PLZ}		100					"	"	"		"		"		"	"
f_{MAX}		101	9/	9/	9/	9/		4.5 V	All register outputs	50		50		50		MHz

TABLE III. Group A inspection for device type 12.
Terminal conditions (pins not designated may be high ≥ 2.0 V, low ≤ 0.8 V, or open).

Symbol	MIL-STD-883 method	Cases R, 2 Test no.	1 CLK	2 I_0	3 I_1	4 I_2	5 I_3	6 I_4	7 I_5	8 I_6	9 I_7	10 GND	11 $\overline{OE}$	12 I/O_0	13 I/O_1	14 O_2
V_{IC}		1	-18 mA									GND				
		2		-18 mA								"				
		3			-18 mA							"				
		4				-18 mA						"				
		5					-18 mA					"				
		6						-18 mA				"				
		7							-18 mA			"				
		8								-18 mA		"				
		9									-18 mA	"				
		10										"	-18 mA			
		11										"		-18 mA		
		12										"			-18 mA	
		13										"				
		14										"				
V_{OL}	3007	15	1/	1/	1/	1/	1/	1/	1/	1/	1/	"	1/ 6/	12 mA		
		16	"	"	"	"	"	"	"	"	"	"	"		12 mA	
		17	"	"	"	"	"	"	"	"	"	"	"			12 mA
		18	"	"	"	"	"	"	"	"	"	"	"			
		19	"	"	"	"	"	"	"	"	"	"	"			
		20	"	"	"	"	"	"	"	"	"	"	"			
		21	"	"	"	"	"	"	"	"	"	"	"			
		22	"	"	"	"	"	"	"	"	"	"	"			
V_{OH}	3006	23	"	"	"	"	"	"	"	"	"	"	"	-2 mA		
		24	"	"	"	"	"	"	"	"	"	"	"		-2 mA	
		25	"	"	"	"	"	"	"	"	"	"	"			-2 mA
		26	"	"	"	"	"	"	"	"	"	"	"			
		27	"	"	"	"	"	"	"	"	"	"	"			
		28	"	"	"	"	"	"	"	"	"	"	"			
		29	"	"	"	"	"	"	"	"	"	"	"			
		30	"	"	"	"	"	"	"	"	"	"	"			
I_{IL}	3009	31	0.4 V									"				
		32		0.4 V								"				
		33			0.4 V							"				
		34				0.4 V						"				
		35					0.4 V					"				
		36						0.4 V				"				
		37							0.4 V			"				
		38								0.4 V		"				
		39									0.4 V	"				
		40										"	0.4 V			
		41										"		0.4 V		
		42										"			0.4 V	
		43										"				
		44										"				

See footnotes at end of table.

TABLE III. Group A inspection for device type 12 - Continued.
Terminal conditions (pins not designated may be high ≥ 2.0 V, low ≤ 0.8 V, or open).

Symbol	MIL-STD-883 method	Cases R, 2 Test no.	15 O_3	16 O_4	17 O_5	18 I/O_6	19 I/O_7	20 V_{CC}	Measured terminals	Test limits: Subgroup 1 T_C = +25°C Min	Subgroup 1 Max	Subgroup 2 T_C = +125°C Min	Subgroup 2 Max	Subgroup 3 T_C = -55°C Min	Subgroup 3 Max	Unit
V_{IC}		1						4.5 V	CLOCK		-1.5		-1.5		-1.5	V
		2						"	I_0		"		"		"	"
		3						"	I_1		"		"		"	"
		4						"	I_2		"		"		"	"
		5						"	I_3		"		"		"	"
		6						"	I_4		"		"		"	"
		7						"	I_5		"		"		"	"
		8						"	I_6		"		"		"	"
		9						"	I_7		"		"		"	"
		10						"	$\overline{OE}$		"		"		"	"
		11						"	I/O_0		"		"		"	"
		12						"	I/O_1		"		"		"	"
		13				-18 mA		"	I/O_6		"		"		"	"
		14					-18 mA	"	I/O_7		"		"		"	"
V_{OL}	3007	15						"	I/O_0		0.5		0.5		0.5	"
		16						"	I/O_1		"		"		"	"
		17						"	O_2		"		"		"	"
		18	12 mA					"	O_3		"		"		"	"
		19		12 mA				"	O_4		"		"		"	"
		20			12 mA			"	O_5		"		"		"	"
		21				12 mA		"	I/O_6		"		"		"	"
		22					12 mA	"	I/O_7		"		"		"	"
V_{OH}	3006	23						"	I/O_0	2.4		2.4		2.4		"
		24						"	I/O_1	"		"		"		"
		25						"	O_2	"		"		"		"
		26	-2 mA					"	O_3	"		"		"		"
		27		-2 mA				"	O_4	"		"		"		"
		28			-2 mA			"	O_5	"		"		"		"
		29				-2 mA		"	I/O_6	"		"		"		"
		30					-2 mA	"	I/O_7	"		"		"		"
I_{IL}	3009	31						5.5 V	CLOCK		-0.25		-0.25		-0.25	mA
		32						"	I_0		"		"		"	"
		33						"	I_1		"		"		"	"
		34						"	I_2		"		"		"	"
		35						"	I_3		"		"		"	"
		36						"	I_4		"		"		"	"
		37						"	I_5		"		"		"	"
		38						"	I_6		"		"		"	"
		39						"	I_7		"		"		"	"
		40						"	$\overline{OE}$		"		"		"	"
		41						"	I/O_0		"		"		"	"
		42						"	I/O_1		"		"		"	"
		43				0.4 V		"	I/O_6		"		"		"	"
		44					0.4 V	"	I/O_7		"		"		"	"

TABLE III. Group A inspection for device type 12 - Continued.
Terminal conditions (pins not designated may be high ≥ 2.0 V, low ≤ 0.8 V, or open).

Symbol	MIL-STD-883 method	Cases R, 2 Test no.	1	2	3	4	5	6	7	8	9	10	11	12	13	14
			CLK	I_0	I_1	I_2	I_3	I_4	I_5	I_6	I_7	GND	$\overline{OE}$	I/O_0	I/O_1	O_2
I_{IH}	3010	45	2.7 V									GND				
		46		2.7 V								"				
		47			2.7 V							"				
		48				2.7 V						"				
		49					2.7 V					"				
		50						2.7 V				"				
		51							2.7 V			"				
		52								2.7 V		"				
		53									2.7 V	"				
		54										"	2.7 V			
I_I		55	5.5 V									"				
		56		5.5 V								"				
		57			5.5 V							"				
		58				5.5 V						"				
		59					5.5 V					"				
		60						5.5 V				"				
		61							5.5 V			"				
		62								5.5 V		"				
		63									5.5 V	"				
		64										"	5.5 V			
		65										"		5.5 V		
		66										"			5.5 V	
		67										"				
		68										"				
I_O		69	1/	1/	1/	1/	1/	1/	1/	1/	1/	"	1/ 6/	2.25 V		
		70	"	"	"	"	"	"	"	"	"	"	"		2.25 V	
		71	"	"	"	"	"	"	"	"	"	"	"			2.25 V
		72	"	"	"	"	"	"	"	"	"	"	"			
		73	"	"	"	"	"	"	"	"	"	"	"			
		74	"	"	"	"	"	"	"	"	"	"	"			
		75	"	"	"	"	"	"	"	"	"	"	"			
		76	"	"	"	"	"	"	"	"	"	"	"			
I_{OZH}		77	"	"	"	"	"	"	"	"	"	"	1/ 7/	2.7 V		
		78	"	"	"	"	"	"	"	"	"	"	"		2.7 V	
		79	"	"	"	"	"	"	"	"	"	"	"			2.7 V
		80	"	"	"	"	"	"	"	"	"	"	"			
		81	"	"	"	"	"	"	"	"	"	"	"			
		82	"	"	"	"	"	"	"	"	"	"	"			
		83	"	"	"	"	"	"	"	"	"	"	"			
		84	"	"	"	"	"	"	"	"	"	"	"			
I_{OZL}		85	"	"	"	"	"	"	"	"	"	"	"			
		86	"	"	"	"	"	"	"	"	"	"	"			0.4 V
		87	"	"	"	"	"	"	"	"	"	"	"			
		88	"	"	"	"	"	"	"	"	"	"	"			
I_{CC}	3005	89										"				

See footnotes at end of table.

TABLE III. Group A inspection for device type 12 - Continued.
Terminal conditions (pins not designated may be high ≥ 2.0 V, low ≤ 0.8 V, or open).

	MIL-STD-883 method	Cases R, 2 Test no.	15 O_3	16 O_4	17 O_5	18 I/O_6	19 I/O_7	20 V_{CC}	Measured terminals	Test limits: Subgroup 1 T_C = +25°C Min	Subgroup 1 Max	Subgroup 2 T_C = +125°C Min	Subgroup 2 Max	Subgroup 3 T_C = -55°C Min	Subgroup 3 Max	Unit
I_{IH}	3010	45						5.5 V	CLOCK		50		50		50	μA
		46						"	I_0		20		20		20	"
		47						"	I_1		"		"		"	"
		48						"	I_2		"		"		"	"
		49						"	I_3		"		"		"	"
		50						"	I_4		"		"		"	"
		51						"	I_5		"		"		"	"
		52						"	I_6		"		"		"	"
		53						"	I_7		"		"		"	"
		54						"	$\overline{OE}$		50		50		50	"
I_I		55						"	CLOCK		0.2		0.2		0.2	mA
		56						"	I_0		0.1		0.1		0.1	"
		57						"	I_1		"		"		"	"
		58						"	I_2		"		"		"	"
		59						"	I_3		"		"		"	"
		60						"	I_4		"		"		"	"
		61						"	I_5		"		"		"	"
		62						"	I_6		"		"		"	"
		63						"	I_7		"		"		"	"
		64						"	$\overline{OE}$		0.2		0.2		0.2	"
		65						"	I/O_0		0.1		0.1		0.1	"
		66						"	I/O_1		"		"		"	"
		67				5.5 V		"	I/O_6		"		"		"	"
		68					5.5 V	"	I/O_7		"		"		"	"
I_O		69						"	I/O_0	-15	-125	-15	-125	-15	-125	"
		70						"	I/O_1	"	"	"	"	"	"	"
		71						"	O_2	"	"	"	"	"	"	"
		72	2.25 V					"	O_3	"	"	"	"	"	"	"
		73		2.25 V				"	O_4	"	"	"	"	"	"	"
		74			2.25 V			"	O_5	"	"	"	"	"	"	"
		75				2.25 V		"	I/O_6	"	"	"	"	"	"	"
		76					2.25 V	"	I/O_7	"	"	"	"	"	"	"
I_{OZH}		77						"	I/O_0		100		100		100	μA
		78						"	I/O_1		100		100		100	"
		79						"	O_2		20		20		20	"
		80	2.7 V					"	O_3		"		"		"	"
		81		2.7 V				"	O_4		"		"		"	"
		82			2.7 V			"	O_5		"		"		"	"
		83				2.7 V		"	I/O_6		100		100		100	"
		84					2.7 V	"	I/O_7		100		100		100	"
I_{OZL}		85						"	O_2		-20		-20		-20	"
		86	0.4 V					"	O_3		"		"		"	"
		87		0.4 V				"	O_4		"		"		"	"
		88			0.4 V			"	O_5		"		"		"	"
I_{CC}		89						"	V_{CC}		220		220		220	mA

TABLE III. Group A inspection for device type 12 - Continued.
Terminal conditions (pins not designated may be high ≥ 2.0 V, low ≤ 0.8 V, or open).

Symbol	MIL-STD-883 method	Cases R, 2 Test no.	1	2	3	4	5	6	7	8	9	10	11	12	13	14
			C.K	I_0	I_1	I_2	I_3	I_4	I_5	I_6	I_7	GND	$\overline{OE}$	I/O_0	I/O_1	O_2
Functional tests	3014	90	2/	2/	2/	2/	2/	2/	2/	2/	2/	GND	2/	2/	2/	2/
t_{SU} 10/	3003	91	3/	3/	3/	3/	3/	3/	3/	3/	3/	GND	6/			4/ 8/
$t_{P(CL)}$ 10/		92	"	"	"	"	"	"	"	"	"	"	"			"
t_{PCL}		93	"	"	"	"	"	"	"	"	"	"	"			"
t_{PCH}		94	"	"	"	"	"	"	"	"	"	"	"			"
t_{PHL}		95	"	"	"	"	"	"	"	"	"	"		4/ 5/	4/ 5/	
t_{PLH}		96	"	"	"	"	"	"	"	"	"	"		4/ 5/	4/ 5/	
t_{PZH}		97	"	"	"	"	"	"	"	"	"	"	3/			4/ 8/
t_{PZL}		98	"	"	"	"	"	"	"	"	"	"	"			"
t_{PHZ}		99	"	"	"	"	"	"	"	"	"	"	"			"
t_{PLZ}		100	"	"	"	"	"	"	"	"	"	"	"			"
t_{PZH}		101	"	"	"	"	"	"	"	"	"	"		4/ 5/	4/ 5/	
t_{PZL}		102	"	"	"	"	"	"	"	"	"	"		"	"	
t_{PHZ}		103	"	"	"	"	"	"	"	"	"	"		"	"	
t_{PLZ}		104	"	"	"	"	"	"	"	"	"	"		"	"	
f_{MAX}		105	9/	9/	9/	9/	9/	9/	9/	9/	9/	"	6/			9/

See footnotes at end of table.

TABLE III. Group A inspection for device type 12 - Continued.
Terminal conditions (pins not designated may be high ≥ 2.0 V, low ≤ 0.8 V, or open).

	MIL-STD-883 method	Cases R, 2 Test no.	15 O_3	16 O_4	17 O_5	18 I/O_6	19 I/O_7	20 V_{CC}	Measured terminals	Test limits: Subgroup 7 T_C = +25°C Min	Subgroup 7 Max	Subgroup 8 T_C = +125°C Min	Subgroup 8 Max	Subgroup 8 T_C = -55°C Min	Subgroup 8 Max	Unit
Functional tests	3014	90	2/	2/	2/	2/	2/	5.5 V	All outputs		2/		2/		2/	
										Subgroup 9 T_C = +25°C Min	Subgroup 9 Max	Subgroup 10 T_C = +125°C Min	Subgroup 10 Max	Subgroup 11 T_C = -55°C Min	Subgroup 11 Max	
t_{SU} 10/	3003	91	4/ 8/	4/ 8/	4/ 8/			3/	All register outputs	15		15		15		ns
$t_{P(CL)}$ 10/		92	"	"	"	"	"	"	"	10		10		10		"
t_{PCL}		93	"	"	"	"	"	"	"		12		12		12	"
t_{PCH}		94	"	"	"	"	"	"	"		12		12		12	"
t_{PHL}		95				4/ 5/	4/ 5/	"	All I/O's		15		15		15	"
t_{PLH}		96				4/ 5/	4/ 5/	"	All I/O's		15		15		15	"
t_{PZH}		97	4/ 8/	4/ 8/	4/ 8/			"	All register outputs		12		12		12	"
t_{PZL}		98	"	"	"			"	"		"		"		"	"
t_{PHZ}		99	"	"	"			"	"		"		"		"	"
t_{PLZ}		100	"	"	"			"	"		"		"		"	"
t_{PZH}		101				4/ 5/	4/ 5/	"	All I/O's		15		15		15	"
t_{PZL}		102				"	"	"	"		"		"		"	"
t_{PHZ}		103				"	"	"	"		"		"		"	"
t_{PLZ}		104				"	"	"	"		"		"		"	"
f_{MAX}		105	9/	9/	9/			4.5 V	All register outputs	50		50		50		MHz

1/ For unprogrammed devices circuit C, for V_{OL}, V_{OH}, I_{OZH}, I_{OZL}, and I_O, use conditions defined for the programming procedure as follows:

V_{OL}: a. 10.5 V on pins 2-9, GND on pins 10 and 11, and a clock pulse on pin 1. Outputs are pins 13, 15, 17, 19.

b. 10.5 V on pins 3-9, GND on pins 2, 10, and 11, and a clock pulse on pin 1. Outputs are on pins 12 and 14.

c. 10.5 V on pins 3-9, GND on pins 1, 2, 10, and 11. Outputs are on pins 16 and 18.

V_{OH}: a. 10.5 V on pin 11, GND on pins 2-10, and a clock pulse on pin 1. Outputs are on pins 12-15.

b. 10.5 V on pin 1, GND on pin 2-10, and clock pulse on pin 11. Outputs are on pins 16-19.

I_{OZH}: a. GND on pins 1-11, outputs are on pins 12-19 for device types 01, 05, and 09. Outputs are on pins 12, 19 for device types 03, 07, and 11. Outputs are on pins 12, 13, 18, 19 for device types 04, 08, and 12.

b. GND on pins 1-10, 2.0 V on pin 11, outputs are on pins 12-19 for device types 02, 06, and 10. Outputs are on pins 13-18 for device types 03, 07, and 11. Outputs are on pins 14-17 for device types 04, 08, and 12.

I_{OZL}: a. GND on pins 2-11, and a clock pulse on pin 1. Outputs are on pins 12 and 19 for device types 01, 05, and 09.

b. GND on pins 2-10, 2.0 V on pin 11, and a clock pulse on pin 1. Outputs are on pins 12-19 for device types 02, 06, and 10. Outputs are on pins 13-18 for device types, 03, 07, and 11. Outputs are on pins 14-17 for device types 04, 08, and 12.

I_O: Applying the proper output test, generate the output condition as specified for V_{OH}. Short only one output at a time. Duration of the short should not exceed 1 second.

2/ The functional test shall verify that no fuses are blown for unprogrammed devices or that the altered item drawing pattern exists for programmed devices. V_{IH} = 3.0 V, V_{IL} = GND.

3/ The test shall check all inputs, gates, and outputs that have programmed. The test shall be performed V_{CC} = 4.5 V and 5.5 V.

4/ The outputs are loaded per figure 5.

5/ Asynchronous output with internal output enable.

6/ External output enable set (OE = GND).

7/ External output enable set (OE = 3.0 V).

8/ Synchronous registered output with external output enable (pin 11).

9/ Maximum clock frequency (f_{MAX}) is considered met if the proper output state changes occur with the frequency set to the minimum limit given to table III, or $f_{MAX} = 1/(t_{SU} + t_{P(CL)})$.

10/ t_{SU} and $t_{P(CL)}$ may be tested concurrently with t_{PCL} and t_{PCH} by using values within the maximum test values of table III.

c. For qualification, at least 50 percent of the sample selected for testing in subgroup 1 shall be programmed (see 3.2.2). For quality conformance inspection, the programmability sample (see 4.4.1c) shall be included in the subgroup 1 tests of table III of method 5005 of MIL-STD-883.

4.4.4 Group D inspection. Group D inspection shall be in accordance with table IV of method 5005 of MIL-STD-883 and as follows. End-point electrical tests shall be as specified in table II herein.

4.5 Methods of inspection. Methods of inspection shall be as specified in the appropriate tables and as follows:

4.5.1 Voltage and current. All voltages given are referenced to the microcircuit ground terminal. Currents given are conventional current and positive when flowing into the referenced terminal.

4.6 Programming/verifying procedure for circuit C. The programming specifications on figures 6 and 7, and table IV for circuit C, and the following procedures shall be used for programming the device.

4.6.1 Preverification.

a. Raise V_{CC} to 5.0 V.

b. Raise output disable pin, OD, to V_{IHH}.

c. Select an input line by specifying inputs and L/R as shown in table V for circuit C.

d. Select a product line by specifying A_0, A_1, and A_2 one-of-eight select as shown in table VI for circuit C.

e. Pulse the clock pin and verify (with clock at V_{IL}) that the output pins, O_0 through O_3, are in the state corresponding to an unblown fuse. Use the minimum timing conditions as specified on figure 7 for circuit C.

(1) For verified unblown condition, continue procedure from c through e.

(2) For verified blown condition, stop procedure.

4.6.2 Programming algorithm.

a. Raise output disable pin, OD, to V_{IHH}.

b. Lower clock pin to V_{IL}.

c. Select an input line as specified in 4.6.1c.

d. Select a product line as specified in 4.6.1d.

e. Raise V_{CC} to V_{IHH}.

f. Program the fuse by pulsing the output pins of the selected group - one at a time - to V_{IHH}, see figure 7 for circuit C.

g. Lower V_{CC} to 5.0 V.

i. Repeat this procedure from c until pattern is complete.

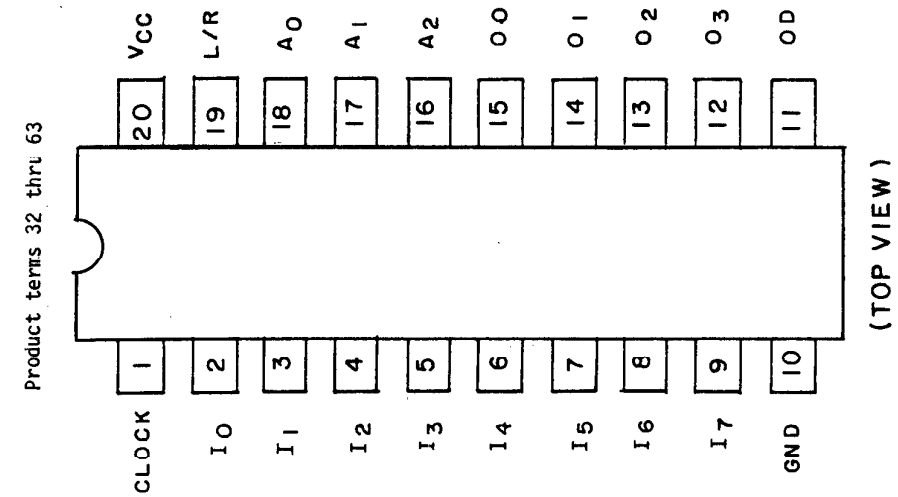

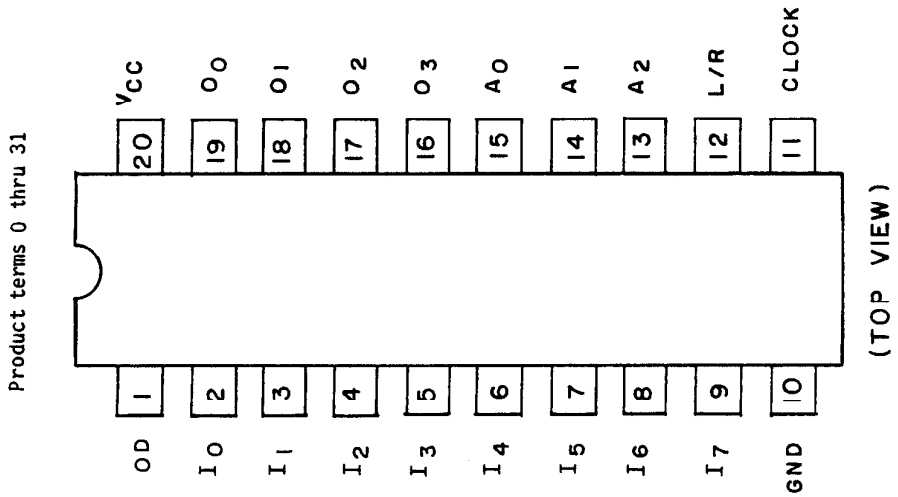

FIGURE 6. Programming pinouts.

PROGRAMMING WAVEFORMS

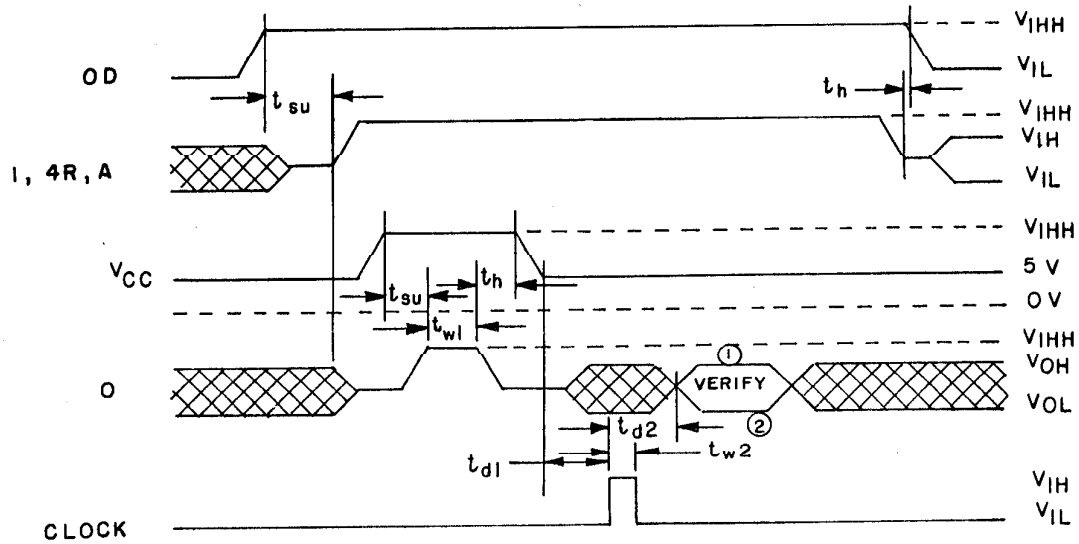

(1) A high level during verify interval indicates that programming has not been successful.

(2) A low level during verify interval indicates that programming has been successful.

SECURITY FUSE PROGRAMMING

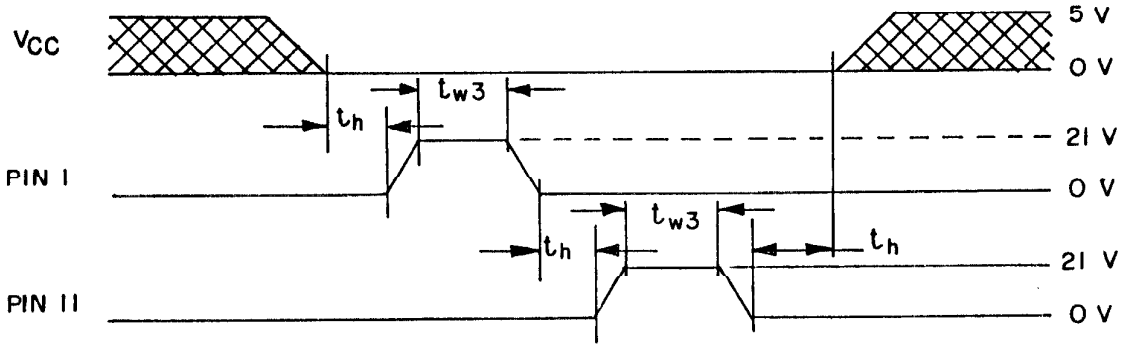

FIGURE 7. Programming waveforms.

TABLE IV. Programming characteristics.

Symbol	Parameters		Limits			Unit
			Min	Typ	Max	
V_{CC}	Verify-level supply voltage		4.5	5.0	5.5	V
V_{IH}	High-level input voltage		2.0		5.5	V
V_{IL}	Low-level input voltage				0.8	V
V_{IHH}	Program-pulse input voltage		10.25	10.5	10.75	V
I_{IHH}	Program-pulse input current	O_0 to O_3		20	50	mA
		OD, L/R		10	25	mA
		All other inputs		1.5	5	mA
		V_{CC}		250	500	mA
t_{w1}	Program-pulse duration at O_0 to O_3 pins		10		50	µs
t_{w2}	Pulse duration at clock		100			ns
	Program-pulse duty cycle at O_0 to O_3 pins				25	%
t_{SU}	Setup time		100			ns
t_h	Hold time		100			ns
t_{d1}	Delay time from V_{CC} to 5 V to clock ↑		100			µs
t_{d2}	Delay time from clock ↑ to valid output		200			ns
	Input voltage at pins 1 and 11 to open verify-protect (security) fuse		20	21	22	V
	Input current to open verify-protect (security) fuse				400	mA
t_{w3}	Pulse duration to open verify-protect (security) fuse		20		50	µs
	V_{CC} value during security fuse programming			0	0.4	V

TABLE V. Input line select.

Input line number	Pin name								
	I_7	I_6	I_5	I_4	I_3	I_2	I_1	I_0	L/R
0	HH	HH	HH	HH	HH	HH	HH	L	Z
1	HH	HH	HH	HH	HH	HH	HH	H	Z
2	HH	HH	HH	HH	HH	HH	HH	L	HH
3	HH	HH	HH	HH	HH	HH	HH	H	HH
4	HH	HH	HH	HH	HH	HH	L	HH	Z
5	HH	HH	HH	HH	HH	HH	H	HH	Z
6	HH	HH	HH	HH	HH	HH	L	HH	HH
7	HH	HH	HH	HH	HH	HH	H	HH	HH
8	HH	HH	HH	HH	HH	L	HH	HH	Z
9	HH	HH	HH	HH	HH	H	HH	HH	Z
10	HH	HH	HH	HH	HH	L	HH	HH	HH
11	HH	HH	HH	HH	HH	H	HH	HH	HH
12	HH	HH	HH	HH	L	HH	HH	HH	Z
13	HH	HH	HH	HH	H	HH	HH	HH	Z
14	HH	HH	HH	HH	L	HH	HH	HH	HH
15	HH	HH	HH	HH	H	HH	HH	HH	HH
16	HH	HH	HH	L	HH	HH	HH	HH	Z
17	HH	HH	HH	H	HH	HH	HH	HH	Z
18	HH	HH	HH	L	HH	HH	HH	HH	HH
19	HH	HH	HH	H	HH	HH	HH	HH	HH
20	HH	HH	L	HH	HH	HH	HH	HH	Z
21	HH	HH	H	HH	HH	HH	HH	HH	Z
22	HH	HH	L	HH	HH	HH	HH	HH	HH
23	HH	HH	H	HH	HH	HH	HH	HH	HH
24	HH	L	HH	HH	HH	HH	HH	HH	Z
25	HH	H	HH	HH	HH	HH	HH	HH	Z
26	HH	L	HH	HH	HH	HH	HH	HH	HH
27	HH	H	HH	HH	HH	HH	HH	HH	HH
28	L	HH	HH	HH	HH	HH	HH	HH	Z
29	H	HH	HH	HH	HH	HH	HH	HH	Z
30	L	HH	HH	HH	HH	HH	HH	HH	HH
31	H	HH	HH	HH	HH	HH	HH	HH	HH

L = V_{IL}, H = V_{IH}, HH = V_{IHH}, Z = high impedance (e.g. 10 kΩ to 5 V).

TABLE VI. Product line select.

Product line number	Pin identification						
	O_3	O_2	O_1	O_0	A_2	A_1	A_0
0, 32	Z	Z	Z	HH	Z	Z	Z
1, 33	Z	Z	Z	HH	Z	Z	HH
2, 34	Z	Z	Z	HH	Z	HH	Z
3, 35	Z	Z	Z	HH	Z	HH	HH
4, 36	Z	Z	Z	HH	HH	Z	Z
5, 37	Z	Z	Z	HH	HH	Z	HH
6, 38	Z	Z	Z	HH	HH	HH	Z
7, 39	Z	Z	Z	HH	HH	HH	HH
8, 40	Z	Z	HH	Z	Z	Z	Z
9, 41	Z	Z	HH	Z	Z	Z	HH
10, 42	Z	Z	HH	Z	Z	HH	Z
11, 43	Z	Z	HH	Z	Z	HH	HH
12, 44	Z	Z	HH	Z	HH	Z	Z
13, 45	Z	Z	HH	Z	HH	Z	HH
14, 46	Z	Z	HH	Z	HH	HH	Z
15, 47	Z	Z	HH	Z	HH	HH	HH
16, 48	Z	HH	Z	Z	Z	Z	Z
17, 49	Z	HH	Z	Z	Z	Z	HH
18, 50	Z	HH	Z	Z	Z	HH	Z
19, 51	Z	HH	Z	Z	Z	HH	HH
20, 52	Z	HH	Z	Z	HH	Z	Z
21, 53	Z	HH	Z	Z	HH	Z	HH
22, 54	Z	HH	Z	Z	HH	HH	Z
23, 55	Z	HH	Z	Z	HH	HH	HH
24, 56	HH	Z	Z	Z	Z	Z	Z
25, 57	HH	Z	Z	Z	Z	Z	HH
26, 58	HH	Z	Z	Z	Z	HH	Z
27, 59	HH	Z	Z	Z	Z	HH	HH
28, 60	HH	Z	Z	Z	HH	Z	Z
29, 61	HH	Z	Z	Z	HH	Z	HH
30, 62	HH	Z	Z	Z	HH	HH	Z
31, 63	HH	Z	Z	Z	HH	HH	HH

4.6.3 First verification pass/for all fuse locations.

a. Raise V_{CC} to 4.5 V.

b. Select input line as specified in 4.6.1c.

c. Select a product line as specified in 4.6.1d.

d. Pulse the clock pin and verify (with clock at V_{IL}) that the output pins, O_0 through O_3 are in the correct state.

(1) For verified output state, continue procedure.

(2) For overblown conditions, stop procedure.

(3) For underblown condition, reject part.

e. Repeat this procedure from b until the entire array is exercised.

4.6.4 High voltage verify/for all fuse locations.

a. Raise V_{CC} to 5.5 V.

b. Repeat from 4.6.3b to 4.6.3d until the entire array is exercised.

Programming should be attempted at room temperature, 15°C to 30°C. To prevent further programming, security fuses may be blown. Raise V_{CC} to 6.0 V, and raise pins 1 and 11 to V_P for 10 ms to 1 s.

5. PACKAGING

5.1 Packaging requirements. The requirements for packaging shall be in accordance with MIL-M-38510.

6. NOTES

6.1 Intended use. Microcircuits conforming to this specification are intended for original equipment design application and logistic support of existing equipment.

6.2 Ordering data. The acquisition document should specify the following:

a. Complete part number (see 1.2).

b. Requirements for delivery of one copy of the quality conformance inspection data pertinent to the device inspection lot to be supplied with each shipment by the device manufacturer, if applicable.

c. Requirements for certificate of compliance, if applicable.

d. Requirements for notification of change of product or process to the contracting activity in addition to notification to the qualifying activity, if applicable.

e. Requirements for failure analysis (including required test condition of method 5003 of MIL-STD-883), corrective action, and reporting of results, if applicable.

f. Requirements for product assurance options.

g. Requirements for special lead lengths or lead forming, if applicable. These requirements shall not affect the part number. Unless otherwise specified, these requirements will not apply to direct purchase by, or direct shipment to, the Government.

h. Requirement for programming the device, including processing option.

i. Requirement for "JAN" marking.

6.3 Abbreviations, symbols, and definitions. The abbreviations, symbols, and definitions used herein are defined in MIL-M-38510, MIL-STD-1331, and as follows:

GND - - - - - - - - - - - - - Electrical ground (common terminal).

I_{IN} - - - - - - - - - - - - - Current flowing into an input terminal.

L/R - - - - - - - - - - - - - Programming left/right identifier.

V_{IC} - - - - - - - - - - - - - Input clamp voltage.

V_{IN} - - - - - - - - - - - - - Voltage level at an input terminal.

6.4 Logistic support. Lead materials and finishes (see 3.3) are interchangeable. Unless otherwise specified, microcircuits acquired for Government logistic support will be acquired to device class B (see 1.2.2), and lead material and finish C (see 3.3). Longer length leads and lead forming shall not affect the part number. It is intended that spare devices for logistic support be acquired in the unprogrammed condition (see 3.7.1) and programmed by the maintenance activity, except where use of quantities for devices with a specific program or pattern justify stocking of preprogrammed devices.

6.5 Substitutability. The cross-reference information below is presented for the convenience of users. Microcircuits covered by this specification will functionally replace the listed generic-industry type. Generic-industry microcircuit types may not have equivalent factors equivalent to MIL-M-38510 device types and may have slight physical variations in relation to case size. The presence of this information shall not be deemed as permitting substitution of generic-industry types for MIL-M-38510 types or as a waiver of any of the provisions of MIL-M-38510.

Military device type	Generic-industry type/manufacturer	Circuit designator	Fusible link	Symbol CAGE number
01	PAL16L8-20/Texas Instruments	C	TiW	CGO/01295
02	PAL16R8-20/Texas Instruments	C	Tiw	---
03	PAL16R6-20/Texas Instruments	C	TiW	---
04	PAL16R4-20/Texas Instruments	C	Tiw	---
05	PAL16L8-30/Texas Instruments	C	TiW	---
06	PAL16R8-30/Texas Instruments	C	Tiw	---
07	PAL16R6-30/Texas Instruments	C	TiW	---
08	PAL16R4-30/Texas Instruments	C	Tiw	---
09	PAL16L8-15/Texas Instruments	C	TiW	---
10	PAL16R8-15/Texas Instruments	C	Tiw	---
11	PAL16R6-15/Texas Instruments	C	TiW	---
12	PAL16R4-15/Texas Instruments	C	Tiw	---

Custodian:
Air Force - 17
Army - FR
Navy - EC

Review activities:
Air Force - 11, 19, 85, 99
Army - AR, MI
Navy - OS, SH, TD
DLA - ES

User activities:
Army - SM
Navy - AS, CG, MC

Preparing activity:
Air Force - 17

Agent:
DLA - ES

(Project 5962-0983)

☆ U.S. GOVERNMENT PRINTING OFFICE: 1987 — 748-073/60031