MIL-M-38510/53E
7 August 1987
SUPERSEDING
MIL-M-38510/53D
30 April 1984

MILITARY SPECIFICATION

MICROCIRCUITS, DIGITAL, CMOS, COMPLEMENTARY PAIR PLUS INVERTER, AND-OR-SELECT EXCLUSIVE OR GATES, EXPANDABLE 8-INPUT GATE, MONOLITHIC SILICON

This specification is approved for use by all Departments and Agencies of the Department of Defense.

1. SCOPE

1.1 Scope. This specification covers the detail requirements for monolithic silicon, CMOS logic microcircuits. Two product assurance classes and a choice of case outlines and lead finishes are provided for each type and are reflected in the complete part number.

1.2 Part number. The part number shall be in accordance with MIL-M-38510, and as specified herein.

1.2.1 Device types. The device types shall be as follows:

Device type	Circuit
01	Dual complementary pair plus inverter
02	Quad AND-OR-select gate
03	Quad 2-input exclusive OR gate
04	Multi-function expandable 8-input gate
51	Dual complementary pair plus inverter
52	Quad AND-OR-select gate
53	Quad 2-input exclusive OR gate
54	Multi-function expandable 8-input gate

1.2.2 Device class. The device class shall be the product assurance level as defined in MIL-M-38510.

1.2.3 Case outlines. The case outlines shall be designated as follows:

Outline letter	Case outline, (see MIL-M-38510, appendix C)
A	F-1 (14-lead, 1/4" x 1/4"), flat package
C	D-1 (14-lead, 1/4" x 3/4"), dual-in-line package
D	F-2 (14-lead, 1/4" x 3/8"), flat package
E	D-2 (16-lead, 1/4" x 7/8"), dual-in-line package
F	F-5 (16-lead, 1/4" x 3/8"), flat package
X	F-1 (14-lead, 1/4" x 1/4"), flat package, except A dimension = 0.1" (2.54 mm maximum)
Y	F-2 (14-lead, 1/4" x 3/8"), flat package, except A dimension = 0.1" (2.54 mm maximum)
Z	F-5 (16-lead, 1/4" x 3/8"), flat package, except A dimension = 0.1" (2.54 mm maximum)

NOTES:
1. As an exception to 3.5.6.2.3 of MIL-M-38510, for case outlines X, Y, and Z only, the leads of bottom brazed ceramic packages (i.e., configuration 2 of case outlines F-1, F-2, or F-5) may have electroless nickel undercoating which shall be 50 to 200 microinches (1.27 to 5.08 µm) thick provided the lead finish is hot solder dip (i.e., finish letter A) and provided that, after any lead forming, an additional hot solder dip coating is applied which shall extend from the outer tip of the lead to no more than 0.015 inch (0.38 mm) from the package edge.
2. For bottom or side brazed packages, case outlines X, Y, and Z only, the S_1 dimension may go to .000 inch (.00 mm) minimum.

Beneficial comments (recommendations, additions, deletions) and any pertinent data which may be of use in improving this document should be addressed to: NASA/ Parts Project Office, NASA Goddard Space Flight Center, Code 311.A, Greenbelt, MD 20771, by using the self-addressed Standardization Document Improvement Proposal (DD Form 1426) appearing at the end of this document or by letter.

AMSC N/A FSC 5962

DISTRIBUTION STATEMENT A. Approved for public release; distribution is unlimited.

1.3 Absolute maximum ratings:

Supply voltage (V_{DD} - V_{SS}):	
Device types 01, 02, 03, 04	-0.5 V to +15.5 V 1/
Device types 51, 52, 53, 54	-0.5 V to +18.0 V
Input current (each input)	±10 mA
Input voltage range	(V_{SS} - 0.5 V) $\leq$ V_I $\leq$ (V_{DD} + 0.5 V)
Storage temperature range	-65°C to +175°C
Maximum power dissipation (P_D)	200 mW
Lead temperature (soldering, 10 seconds)	+300°C
Thermal resistance, junction-to-case (θ_{JC})	See MIL-M-38510, appendix C
Junction temperature (T_J)	+175°C

1.4 Recommended operating conditions:

Supply voltage (V_{DD} - V_{SS}):	
Device types 01, 02, 03, 04	4.5 V dc to 12.5 V dc
Device types 51, 52, 53, 54	4.5 V dc to 15 V dc
Input low (V_{IL}) voltage range:	
Device types 01, 02, 03, 04	0-0.85 V dc at V_{DD} = 5 V dc; 0-2.1 V dc at V_{DD} = 12.5 V dc
Device type 51	0-1.0 V dc at V_{DD} = 5 V dc 0-2.0 V dc at V_{DD} = 10 V dc 0-3.0 V dc at V_{DD} = 15 V dc
Device type 52, 53, 54	0-1.5 V dc at V_{DD} = 5 V dc, 0-2.0 V dc at V_{DD} = 10 V dc, 0-4.0 V dc at V_{DD} = 15 V dc, V_{OL} = 10 percent V_{DD}, V_{OH} = 90 percent V_{DD}
Input high (V_{IH}) voltage range:	
Device types 01, 02, 03, 04	3.95-5.0 V dc at V_{DD} = 5 V dc; 10.0-12.5 V dc at V_{DD} = 12.5 V dc
Device type 51	3.5-5.0 V dc at V_{DD} = 5 V dc, 4.0-5.0 V dc at V_{DD} = 5 V dc 8.0-10.0 V dc at V_{DD} = 10 V dc 12.0-15.0 V dc at V_{DD} = 15 V dc
Device types 52, 53, 54	8.0-10.0 V dc at V_{DD} = 10 V dc, 11.0-15.0 V dc at V_{DD} = 15 V dc, V_{OL} = 10 percent V_{DD}, V_{OH} = 90 percent V_{DD}
Load capacitance	50 pF maximum
Operating temperature range	-55°C to +125°C

1/ Applied voltage (for device type 01 only) on pins 2, 4, 9, and 11 shall be $\geq$ V_{SS} and $\leq$ V_{DD}.

2. APPLICABLE DOCUMENTS

2.1 Government specification and standard. The following specification and standard form a part of this specification to the extent specified herein. Unless otherwise specified, the issues of these documents shall be those listed in the issue of the Department of Defense Index of Specifications and Standards and supplement thereto, cited in the solicitation.

SPECIFICATION

MILITARY

MIL-M-38510 - Microcircuits, General Specification for.

STANDARD

MILITARY

MIL-STD-883 - Test Methods and Procedures for Microelectronics.

(Copies of the specification and standard required by contractors in connection with specific acquisition functions should be obtained from the contracting activity or as directed by the contracting activity.)

2.2 Order of precedence. In the event of a conflict between the text of this specification and the references cited herein (except for associated detail specifications, specification sheets or MS standards), the text of this specification shall take precedence. Nothing in this specification, however, shall supersede applicable laws and regulations unless a specific exemption has been obtained.

3. REQUIREMENTS

3.1 Detail specification. The individual item requirements shall be in accordance with MIL-M-38510, and as specified herein.

3.2 Design, construction, and physical dimensions. The design, construction, and physical dimensions shall be as specified in MIL-M-38510 and herein. Although eutectic die bonding is preferred, epoxy die bonding may be performed. However, the resin used shall be Dupont 5504 Conductive Silver Paste, or equivalent, which is cured at +200°C ±10°C for a minimum of 2 hours. The use of equivalent epoxies or cure cycles shall be approved by the qualifying activity. Equivalency shall be demonstrated in data submitted to the qualifying activity for verification.

3.2.1 Terminal connections. The terminal connections shall be as specified on figure 1.

3.2.2 Logic diagrams. The logic diagrams shall be as specified on figure 2.

3.2.3 Truth tables and logic equations. The truth tables and logic equations shall be as specified on figure 3.

3.2.4 Schematic circuits. The schematic circuits shall be submitted to the preparing activity prior to inclusion of a manufacturer's device in this specification and shall be submitted to the qualifying activity and agent activity (DESC-ECS) as a prerequisite for qualification. All qualified manufacturers' schematics shall be maintained and available upon request.

3.2.5 Case outlines. The case outlines shall be as specified in 1.2.3.

3.3 Lead material and finish. The lead material and finish shall be in accordance with MIL-M-38510 and 6.4 herein.

3.4 Electrical performance characteristics. The electrical performance characteristics are as specified in table I, and apply over the full recommended case operating temperature range, unless otherwise specified.

TABLE I. Electrical performance characteristics.

Test	Symbol	Conditions 1/ V_{SS} = 0 V -55°C ≤ T_C ≤ +125°C unless otherwise specified		Device type	Limits Min	Limits Max	Unit
Positive clamping input to V_{DD}	$V_{IC(pos)}$	T_C = +25°C, V_{DD} = GND, V_{SS} = open, output = open, I_I = 1 mA		All		1.5	V dc
Negative clamping input to V_{SS}	$V_{IC(neg)}$	T_C = +25°C, V_{DD} = open, V_{SS} = GND, output = open, I_I = -1 mA		All		-6	V
Quiescent supply current	I_{SS}	Any combination of inputs	V_{DD} = 15 V	01		-500	nA
				02, 03		-750	nA
				04		-3	μA
			V_{DD} = 18 V	51		-500	nA
				52, 53		-750	nA
				54		-3	μA
High level output voltage	V_{OH1}	V_{DD} = 4.5 V dc, I_{OH} = -0.1 mA, any one input = V_{IL}		01, 02, 03	2.50		V
	V_{OH2}	V_{DD} = 5 V dc, I_{OH} = -0.13 mA, any one input = V_{IL}		01, 02, 03	4.5		V
	V_{OH3}	V_{DD} = 5 V dc, I_{OH} = 0 any one input = V_{IL}		01, 02, 03, 04	4.95		V
	V_{OH4}	V_{DD} = 12.5 V dc, I_{OH} = 0 any one input = V_{IL}		01, 02, 03, 04	11.25		V
	V_{OH5}	V_{DD} = 15 V dc, I_{OH} = 0		51, 52, 53, 54	14.95		V
Low level output voltage	V_{OL1}	V_{DD} = 5.5 V dc, I_{OL} = 0.23 mA any one input = V_{IH}		01, 02, 03		0.50	V
	V_{OL2}	V_{DD} = 5 V dc, I_{OL} = 0.28 mA any one input = V_{IH}		01, 02, 03		0.50	V
	V_{OL3}	V_{DD} = 5.0 V dc, I_{OL} = 0 any one input = V_{IH}		01, 02, 03, 04		50	mV dc
	V_{OL4}	V_{DD} = 12.5 V dc, I_{OL} = 0 any one input = V_{IH}		01, 02, 03, 04		1.25	V
	V_{OL5}	V_{DD} = 5.0 V dc, any one input = V_{IH}		03		0.50	V
	V_{OL6}	V_{DD} = 15 V dc, I_{OL} = 0		51, 52, 53, 54		50	mV dc

See footnotes at end of table.

TABLE I. Electrical performance characteristics - Continued.

Test	Symbol	Conditions 1/ V_{SS} = 0 V -55°C < T_C < +125°C unless otherwise specified		Device type	Limits Min	Limits Max	Unit
Input high voltage	V_{IH1}	V_{DD} = 5 V dc, V_O = 0.5 V, $\lvert I_O \rvert \leq 1$ µA		51	4.0		V
				52, 53, 54	3.5		
	V_{IH2}	V_{DD} = 10 V dc, V_O = 1.0 V, $\lvert I_O \rvert \leq 1$ µA		51	8.0		V
				52, 53, 54	7.0		
	V_{IH3}	V_{DD} = 15 V dc, V_O = 1.5 V, $\lvert I_O \rvert \leq 1$ µA		51	12.0		V
				52, 53, 54	11.0		
Input low voltage	V_{IL1}	V_{DD} = 5 V dc, V_O = 4.5 V, $\lvert I_O \rvert \leq 1$ µA		51		1.0	V
				52, 53, 54		1.5	
	V_{IL2}	V_{DD} = 10 V dc, V_O = 9.0 V, $\lvert I_O \rvert \leq 1$ µA		51		2.0	V
				52, 53, 54		2.0	
	V_{IL3}	V_{DD} = 15 V dc, V_O = 13.5 V, $\lvert I_O \rvert \leq 1$ µA		51		3.0	V
				52, 53, 54		4.0	
Output low (sink current)	I_{OL1}	V_{DD} = 5 V dc, V_{IN} = 5 V dc, V_{OL} = 0.4 V dc		51, 52, 53, 54	0.36		mA
	I_{OL2}	V_{DD} = 15 V dc, V_{IN} = 15 V dc, V_{OL} = 1.5 V dc		51, 52, 53, 54	2.4		mA
Output high (source current)	I_{OH1}	V_{DD} = 5 V dc, V_{OH} = 4.6 V dc	All inputs are GND	51, 52, 53, 54	-0.36		mA
	I_{OH2}	V_{DD} = 15 V dc, V_{OH} = 13.5 V dc	All inputs are GND	51, 52, 53, 54	-2.4		mA
Input leakage current 2/	I_{IH}	Measure inputs sequentially	V_{DD} = 15 V dc	01, 02, 03, 04		45	nA
			V_{DD} = 18 V dc	51, 52, 53, 54			
	I_{IL}	Measure inputs sequentially	V_{DD} = 15 V dc	01, 02, 03, 04		-45	nA
			V_{DD} = 18 V dc	51, 52, 53, 54			
Three-state output leakage current	I_{OC1}	Measure outputs sequentially $V_O = V_{DD}$	V_{DD} = 15 V dc	04		90	nA
			V_{DD} = 18 V dc	54			

See footnotes at end of table.

TABLE I. Electrical performance characteristics - Continued.

Test	Symbol	Conditions 1/ V_{SS} = 0 V -55°C ≤ T_C ≤ +125°C unless otherwise specified		Device type	Limits Min	Limits Max	Unit
Three-state output leakage current	I_{OC2}	Measure outputs sequentially $V_O = V_{SS}$	V_{DD} = 15 V dc	04		-90	nA
			V_{DD} = 18 V dc	54			
Input test voltage	V_{ZAP}	C1 = 100 pF, R_2 = 1.5 kΩ (see 4.5.3)		All	400		V
Input capacitance	C_I	V_{DD} = 0 V dc, f = 1 MHz T_C = +25°C		All		12	pF
Propagation delay time, high-to-low level	t_{PHL}	V_{DD} = 5.0 V dc, C_L = 50 pF R_L = 200 kΩ (see figure 6)		01	6	255	ns
				51	6	155	
Propagation delay time, low-to-high level	t_{PLH}			01	6	165	ns
				51	6	155	
Transition time, high-to-low level	t_{THL}			01	6	360	ns
				51	6	280	
Transition time, low-to-high level	t_{TLH}			01	6	240	ns
				51	6	280	
Propagation delay time, high-to-low level	t_{PHL}			02	13	525	ns
				52	13	420	
Propagation delay time, low-to-high level	t_{PLH}			02	13	525	ns
				52	13	420	
Transition time, high-to-low level	t_{THL}	V_{DD} = 5.0 V dc, C_L = 50 pF R_L = 200 kΩ (see figure 6)		02	10	525	ns
				52	10	420	
Transition time, low-to-high level	t_{TLH}			02	10	525	ns
				52	10	420	
Propagation delay time, high-to-low level	t_{PHL}			03	10	270	ns
				53	10	350	
Propagation delay time, low-to-high level	t_{PLH}			03	10	270	ns
				53	10	350	
Transition time, high-to-low level	t_{THL}			03	10	380	ns
				53	10	280	
Transition time, low-to-high level	t_{TLH}			03	10	530	ns
				53	10	280	

See footnotes at end of table.

TABLE I. Electrical performance characteristics - Continued.

Test	Symbol	Conditions 1/ V_{SS} = 0 V -55°C ≤ T_C ≤ +125°C unless otherwise specified	Device type	Limits Min	Limits Max	Unit
Propagation delay time, high-to-low level (NOR gate)	t_{PHL1}	V_{DD} = 5.0 V dc, C_L = 50 pF R_L = 200 kΩ (see figures 7-17)	04 54	30	820	ns
Propagation delay time, high-to-low level (OR gate)	t_{PHL2}		04 54	28	755	ns
Propagation delay time, high-to-low level (AND gate)	t_{PHL3}		04 54	33	905	ns
Propagation delay time, high-to-low level (NAND gate)	t_{PHL4}		04 54	29	670	ns
Propagation delay time, high-to-low level (OR/AND gate)	t_{PHL5}		04 54	29	775	ns
Propagation delay time, high-to-low level (OR/NAND gate)	t_{PHL6}		04 54	27	755	ns
Propagation delay time, high-to-low level (AND/NOR gate)	t_{PHL7}		04 54	30	790	ns
Propagation delay time, high-to-low level (AND/OR gate)	t_{PHL8}		04 54	31	840	ns
Propagation delay time, high-to-low level (Ka to output)	t_{PHL9}		04 54	30	760	ns
Propagation delay time, high-to-low level (Kb to output)	t_{PHL10}		04 54	23	615	ns
Propagation delay time, high-to-low level (Kc to output)	t_{PHL11}		04 54	18	475	ns
Propagation delay time, low-to-high level (NOR gate)	t_{PLH1}		04 54	24	640	ns
Propagation delay time, low-to-high level (OR gate)	t_{PLH2}		04 54	28	750	ns
Propagation delay time, low-to-high level (AND gate)	t_{PLH3}		04 54	25	655	ns
Propagation delay time, low-to-high level (NAND gate)	t_{PLH4}		04 54	31	830	ns

See footnotes at end of table.

TABLE I. Electrical performance characteristics - Continued.

Test	Symbol	Conditions 1/ V_{SS} = 0 V -55°C ≤ T_C ≤ +125°C unless otherwise specified	Device type	Limits Min	Limits Max	Unit
Propagation delay time, low-to-high level (OR/AND gate)	t_{PLH5}	V_{DD} = 5.0 V dc, C_L = 50 pF R_L = 200 kΩ (see figures 7-17)	04	24	645	ns
			54			
Propagation delay time, low-to-high level (OR/NAND gate)	t_{PLH6}		04	26	700	ns
			54			
Propagation delay time, low-to-high level (AND/NOR gate)	t_{PLH7}		04	27	730	ns
			54			
Propagation delay time, low-to-high level (AND/OR gate)	t_{PLH8}		04	27	720	ns
			54			
Propagation delay time, low-to-high level (Ka to output)	t_{PLH9}		04	28	730	ns
			54			
Propagation delay time, low-to-high level (Kb to output)	t_{PLH10}		04	23	605	ns
			54			
Propagation delay time, low-to-high level (Kc to output)	t_{PLH11}		04	17	445	ns
			54			
Transition time, high-to-low level	t_{THL}	V_{DD} = 5.0 V dc, C_L = 50 pF R_L = 200 kΩ (see figure 7)	04	6	160	ns
			54			
Transition time, low-to-high level	t_{TLH}		04	5	140	ns
			54			
Propagation delay time, low to Z, high to Z (Kd input to output)	t_{PLZ} t_{PHZ}	V_{DD} = 5.0 V dc, C_L = 50 pF R_L = 1.0 kΩ (see figure 18)	04	18	490	ns
			54			
Propagation delay time, Z to low, Z to high (Kd input to output)	t_{PZL} t_{PZH}	V_{DD} = 5.0 V dc, C_L = 50 pF R_L = 1.0 kΩ (see figure 18)	04	23	630	ns
			54			

1/ Complete terminal conditions shall be as specified in table III.
2/ Input current at one input mode.

3.5 Electrical test requirements. The electrical test requirements for each device class shall be the subgroups specified in table II. The electrical tests for each subgroup are described in table III. V_{IL} and V_{IH} testing requires only a supply of attributes data.

3.6 Marking. Marking shall be in accordance with MIL-M-38510.

3.6.1 Total dose radiation hardness identifier. Total dose radiation hardness identifier shall be in accordance with MIL-M-38510 and 4.5.5 herein.

3.6.2 Serialization. All class S devices shall be serialized in accordance with MIL-M-38510.

3.6.3 Correctness of indexing and markings. All devices shall be subjected to the final electrical tests specified in table II after part number marking to verify that they are correctly indexed and identified by part number. Optionally, an approved electrical test may be devised especially for this requirement.

3.7 Microcircuit group assignment. The devices covered by this specification shall be in microcircuit group number 36 (see MIL-M-38510, appendix E).

4. QUALITY ASSURANCE PROVISIONS

4.1 Sampling and inspection. Sampling and inspection procedures shall be in accordance with MIL-M-38510 and methods 5005 and 5007, as applicable, of MIL-STD-883, except as modified herein.

4.2 Screening. Screening shall be in accordance with method 5004 of MIL-STD-883, and shall be conducted on all devices prior to qualification and quality conformance inspection. The following additional criteria shall apply:

a. Delete the sequence specified in initial (pre-burn-in) electrical parameters (3.1.10) through interim (post-burn-in) electrical parameters (3.1.14) and substitute lines 1 through 7 of table II herein.

b. Burn-in (method 1015 of MIL-STD-883).

(1) Static tests (test condition A) use circuit shown on figure 4, or equivalent. Case temperature (T_C) shall be +125°C minimum. Test duration for each static test shall be 24 hours minimum for class S devices and in accordance with table I of method 1015 for class B devices.

(2) Dynamic tests (test condition D) use circuit shown on figure 5, or equivalent. Case temperature (T_C) shall be +125°C minimum. Test duration shall be in accordance with table I of method 1015.

c. Interim and final electrical parameters shall be as specified in table II herein.

d. For class S devices, post dynamic burn-in, or class B devices, post static burn-in, electrical parameter measurements may, at the manufacturer's option, be performed separately or included in the final electrical parameter requirements.

e. When device types 01 through 04 are qualified by extension (see 4.3.1), they shall be screened in accordance with the requirements for corresponding device types 51 through 54, respectively.

TABLE II. Electrical test requirements for device classification.

Line no.	Applicable tests and MIL-STD-883 test methods	Class S device 1/				Class B device 1/			
		Ref. par.	Table 2/ III sub-groups	Table 3/ IV delta limits	Test circuit figure	Ref. par.	Table 2/ III sub-groups	Table 3/ IV delta limits	Test circuit figure
1	Interim electrical parameters method 5004		1				1		
2	Static burn-in I method 1015	4.2b 4.5.2			4				
3	Same as line 1		1	Δ					
4	Static burn-in II method 1015	4.2b 4.5.2			4	4.2b 4.5.2	4/		4
5	Same as line 1		1*	Δ		4.2d	1*	Δ	
6	Dynamic burn-in method 1015	4.2b 4.5.2			5				
7	Same as line 1	4.2d	1*	Δ					
8	Final electrical parameters method 5004		1*,2,3,9				1*,2,3,9		
9	Group A end-point electrical parameters method 5005	4.4.1	1,2,3,4, 9,10,11			4.4.1	1,2,3,4, 9,10,11		
10	Group B end-point electrical parameters method 5005	4.4.2	1,2,3, 9,10,11	Δ					
11	Group C end-point electrical parameters method 5005					4.4.3	1,2,3	Δ	
12	Group D end-point electrical parameters method 5005	4.4.4	1,2,3			4.4.4	1,2,3		

1/ Blank spaces indicate tests are not applicable.
2/ (*) indicates PDA applies to subgroup 1 (see 4.2.1).
3/ (Δ) indicates delta limits shall be required on table III, subgroup 1, where specified, and delta values shall be computed with reference to the previous interim electrical parameters.
4/ The device manufacturer may, at his option, either perform delta measurements, or within 24 hours after burn-in (or removal of bias) perform the final electrical parameter measurements.

4.2.1 Percent defective allowable (PDA).

a. The class S devices PDA shall be 5 percent for static burn-in and 5 percent for dynamic burn-in, based on the exact number of devices submitted to each separate burn-in.

b. Static burn-in I and II failures shall be cumulative for determining PDA.

c. The class B devices PDA shall be in accordance with MIL-M-38510. Dynamic burn-in is not required.

d. Those devices whose measured characteristics after burn-in exceed the specified delta (Δ) limits or electrical parameter limits specified in table III, subgroup 1, are defective and shall be removed to burn-in the lot. The verified failures divided by the total number of devices in lot initially submitted to burn-in shall be used to determine the percent defective for the lot and the lot shall be accepted or rejected based on the specified PDA.

4.3 Qualification inspection. Qualification inspection shall be in accordance with MIL-M-38510. Inspections to be performed shall be those specified in method 5005 of MIL-STD-883 and herein for groups A, B, C, D, and E inspections (see 4.4.1 through 4.4.5).

4.3.1 Qualification extension. When authorized by the qualifying activity, for qualification inspection, if a manufacturer qualifies to a 51-54 device type which is manufactured identically to a 01-04 device type on this specification, then the 01-04 device type may be part I qualified by conducting only worst case group A electrical tests and any electrical tests specified as additional group C subgroups and submitting data in accordance with MIL-M-38510, appendix D.

4.4 Quality conformance inspection. Quality conformance inspection shall be in accordance with MIL-M-38510. Inspections to be performed shall be those specified in method 5005 of MIL-STD-883 and herein for groups A, B, C, D, and E inspections (see 4.4.1 through 4.4.5).

4.4.1 Group A inspection. Group A inspection shall be in accordance with table I of method 5005 of MIL-STD-883 and as follows:

a. End-point electrical parameters shall be as specified in table II herein.

b. Subgroups 5, 6, 7, and 8 of table I of method 5005 of MIL-STD-883 shall be omitted.

c. Subgroup 4 (C_I measurement) shall be measured only for initial qualification and after process or design changes which may affect input capacitance. Capacitance shall be measured between the designated terminal and V_{SS} at a frequency of 1 MHz.

d. Subgroups 9 and 11 shall be measured only for initial qualification and after process or design changes which may affect dynamic performance.

e. When the 01 through 04 device types are qualified by extension (see 4.3.1), these device types will be inspected (Q.C.I.) according to the 51 through 54 device type requirements, respectively.

4.4.2 Group B inspection. Group B inspection shall be in accordance with table II of method 5005 of MIL-STD-883 and as follows:

a. Class S steady-state life (accelerated) test circuits shall be submitted to the qualifying activity for approval. When the alternate steady-state life test is used, the circuit on figure 5, or equivalent, shall be used.

b. A special subgroup shall be added using an LTPD of 15 for classes S and B, and shall be performed on each inspection lot for initially qualified device types 01-04, and measured only for initial qualification and after process or design changes for initially qualified device types 51-54. This subgroup shall consist of a high voltage test of the input protection circuits, V_{ZAP} (see 4.5.3).

Device types 01 and 51

CASES A, C, D, X, and Y

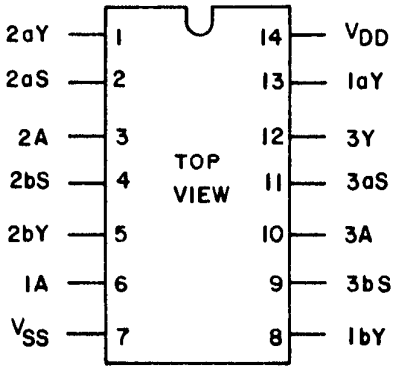

Device types 02 and 52

CASES E, F, and Z

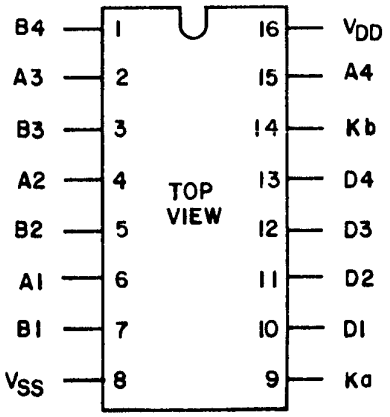

Device types 03 and 53

CASES A, C, D, X, and Y

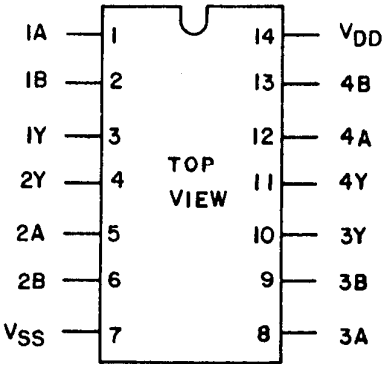

Device types 04 and 54

CASES E, F, and Z

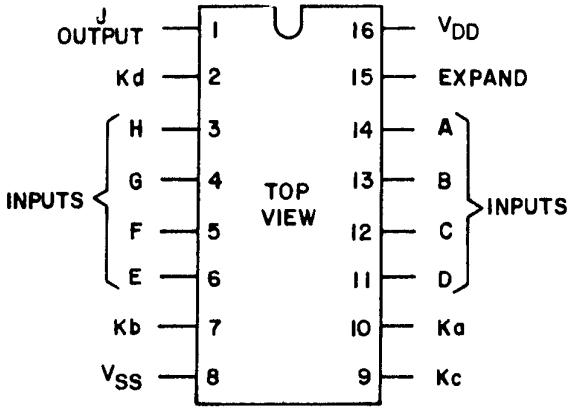

K_d = "H" Normal-inverter action

K_d = "L" High-impedance output

FIGURE 1. Terminal connections.

Device types 01 and 51

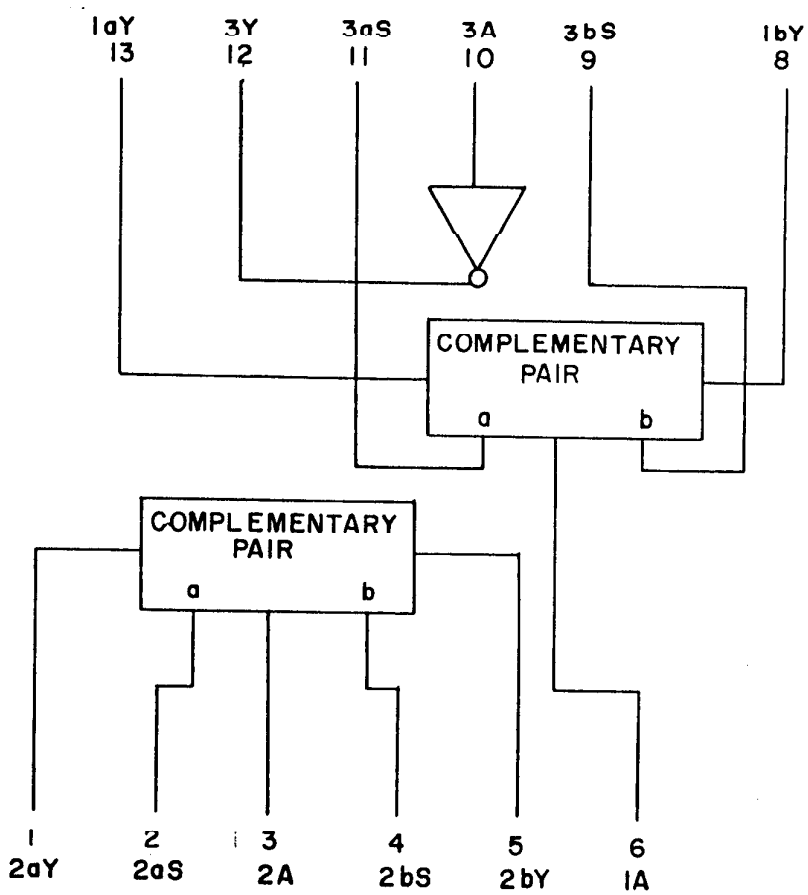

FIGURE 2. Logic diagrams.

Device types 02 and 52

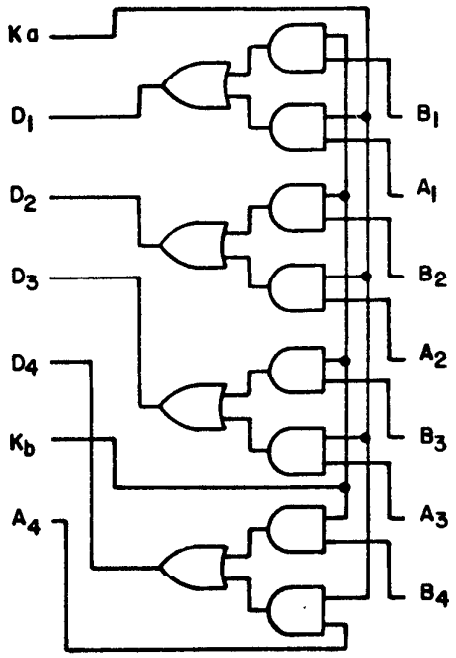

Device types 03 and 53

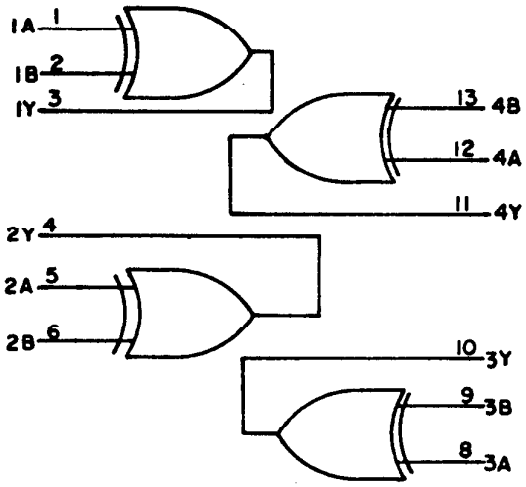

FIGURE 2. Logic diagrams - Continued.

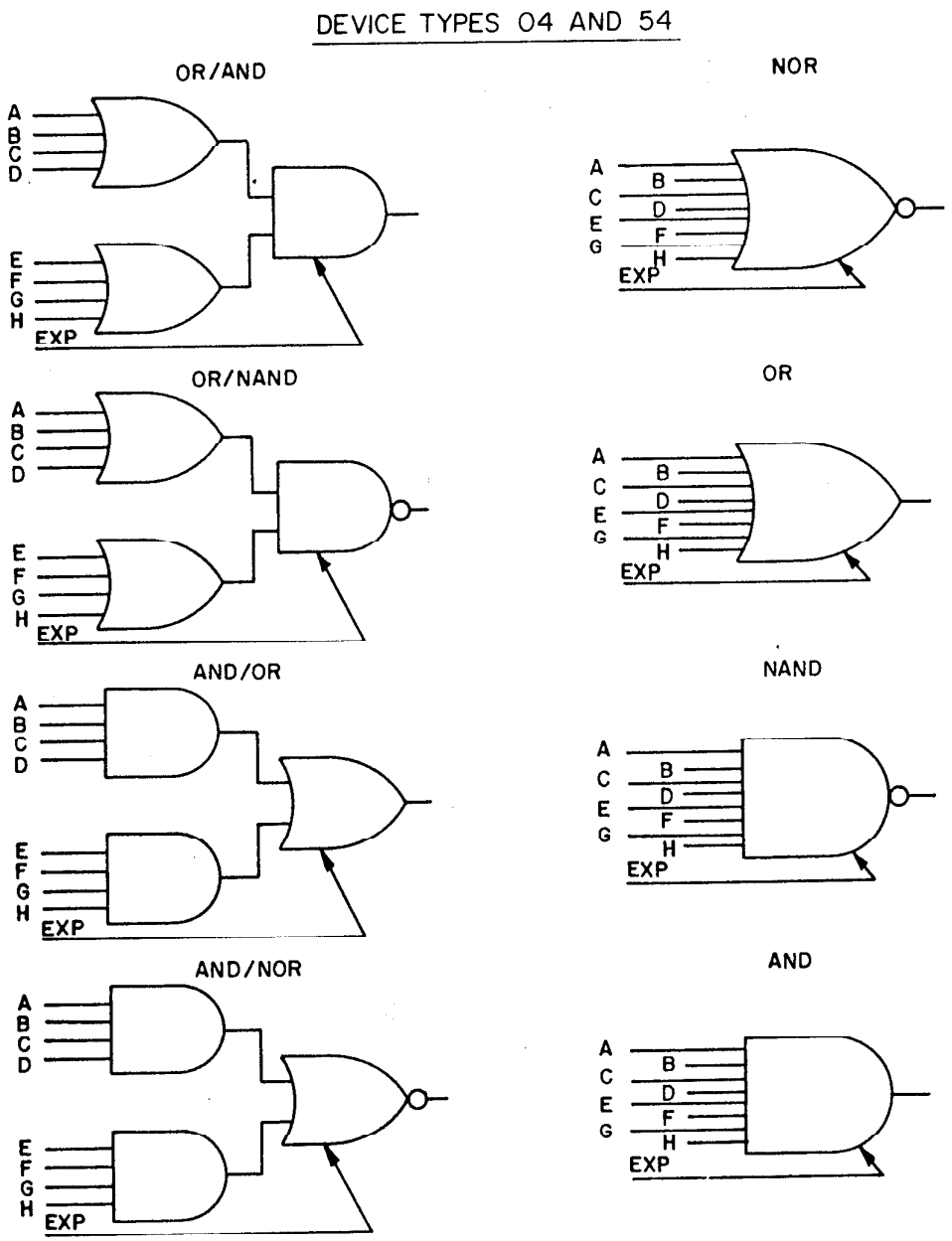

FIGURE 2. Logic diagrams - Continued.

Device types 01 and 51

COMPLEMENTARY PAIR

(Not applicable)

INVERTER

Truth table

Input	Output
3A	3Y
H	L
L	H

Positive logic $3Y = \overline{3A}$

Device types 02 and 52

Truth table

Inputs				Output
A_n	K_a	B_n	K_b	D_n
L	L	L	L	L
H	L	L	L	L
L	H	L	L	L
L	L	H	L	L
L	L	L	H	L
H	H	L	L	H
L	H	H	L	L
L	L	H	H	H
H	L	L	H	L
H	L	H	L	L
L	H	L	H	L
H	H	H	L	H
L	H	H	H	H
H	L	H	H	H
H	H	L	H	H
H	H	H	H	H

Positive logic $D_n = (A_n \cdot K_a) + (B_n \cdot K_b)$
$n = 1, 2, 3,$ or 4

Device types 03 and 53

Truth table each gate

Inputs		Output
A	B	Y
L	L	L
L	H	H
H	L	H
H	H	L

Positive logic $Y = A \oplus B$

Device types 04 and 54

FUNCTION TRUTH TABLE

OUTPUT FUNCTION	BOOLEAN EXPRESSION	K_a	K_b	K_c	UNUSED INPUT
NOR	$J=\overline{A+B+C+D+E+F+G+H}$	0	0	0	V_{SS}
OR	$J=A+B+C+D+E+F+G+H$	0	0	1	V_{SS}
OR/AND	$J=(A+B+C+D) \cdot (E+F+G+H)$	0	1	0	V_{SS}
OR/NAND	$J=\overline{(A+B+C+D) \cdot (E+F+G+H)}$	0	1	1	V_{SS}
AND	$J=ABCDEFGH$	1	0	0	V_{DD}
NAND	$J=\overline{ABCDEFGH}$	1	0	1	V_{DD}
AND/NOR	$J=\overline{ABCD+EFGH}$	1	1	0	V_{DD}
AND/OR	$J=ABCD+EFGH$	1	1	1	V_{DD}

K_d = 1 Normal-inverter action Expand input = 0
K_d = 0 High-impedance output

FIGURE 3. Truth table and logic equations.

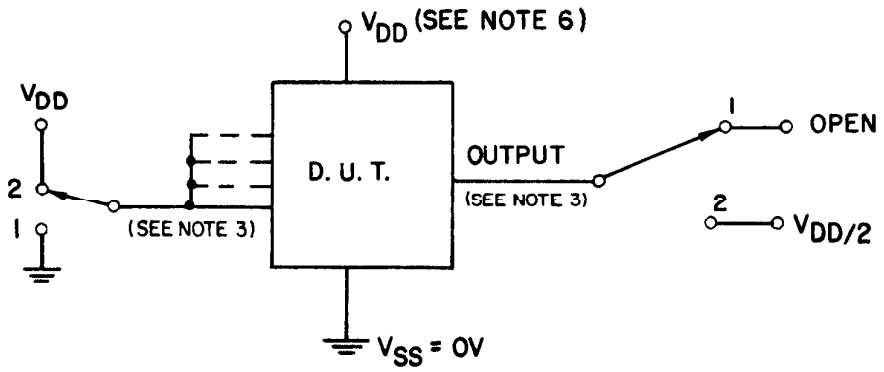

NOTES:
1. For static burn-in I, all inputs are connected to 0 volts, switch position 1.
2. For static burn-in II, all inputs are connected to V_{DD}, switch position 2.
3. Except for V_{DD} and V_{SS}, terminals shall be connected through resistors of 2 kΩ to 47 kΩ. The actual measured value of the resistor selected shall not exceed ±20 percent of its branded value due to use, heat or age.
4. Output may be in switch position 1 or 2.
5. For device types 01 and 51:
   a. Connect pins 14, 2, and 11 together.
   b. Connect pins 7, 4, and 9 together.
   c. Connect pins 13 and 8 together.
   d. Connect pins 1 and 5 together.
6. V_{DD} = 12.5 V minimum, 15.0 V maximum for device 01, 02, 03, and 04.
   V_{DD} = 15.0 V minimum, 18.0 V maximum for device 51, 52, 53, and 54.
   $V_{DD}/2$ = $V_{DD}/2$ ±1.0 V for all devices.
   V_{SS} = 0.0 V.

FIGURE 4. Static burn-in test circuits.

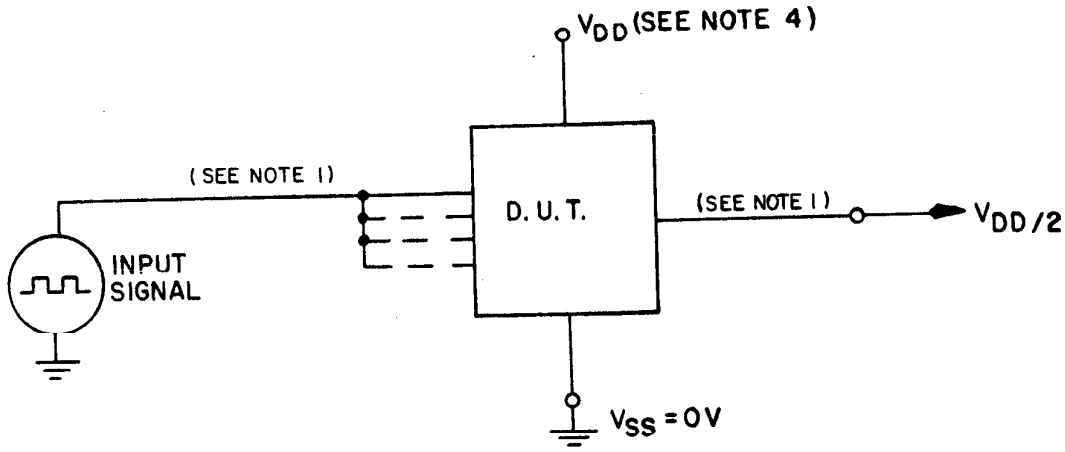

NOTES:

1. Except for V_{DD} and V_{SS}, terminals shall be connected through resistors of 2 kΩ to 47 kΩ. The actual measured value of the resistor selected shall not exceed ± 20 percent of its branded value due to use, heat or age.
2. Input signal requirements:
   a. Square wave, 50 percent duty cycle.
   b. 25 kHz < PRR < 1 MHz.
   c. t_{TLH} and t_{THL} < 1 µs.
   d. Voltage level:
      Minimum = V_{SS} -0.5 V, +10 percent V_{DD}.
      Minimum = V_{DD} +0.5 -10 percent V_{DD}.
3. For device types 01 and 51:
   a. Connect pins 14, 2, and 11 together.
   b. Connect pins 7, 4, and 9 together.
   c. Connect pins 13 and 8 together.
   d. Connect pins 1 and 5 together.
4. V_{DD} = 12.5 V minimum, 15.0 V maximum for device 01, 02, 03, and 04.
   V_{DD} = 15.0 V minimum, 18.0 V maximum for device 51, 52, 53, and 54.
   $V_{DD}/2$ = $V_{DD}/2$ ±1.0 V.
   V_{SS} = 0.0 V.

FIGURE 5. Dynamic burn-in and operating life test circuit.

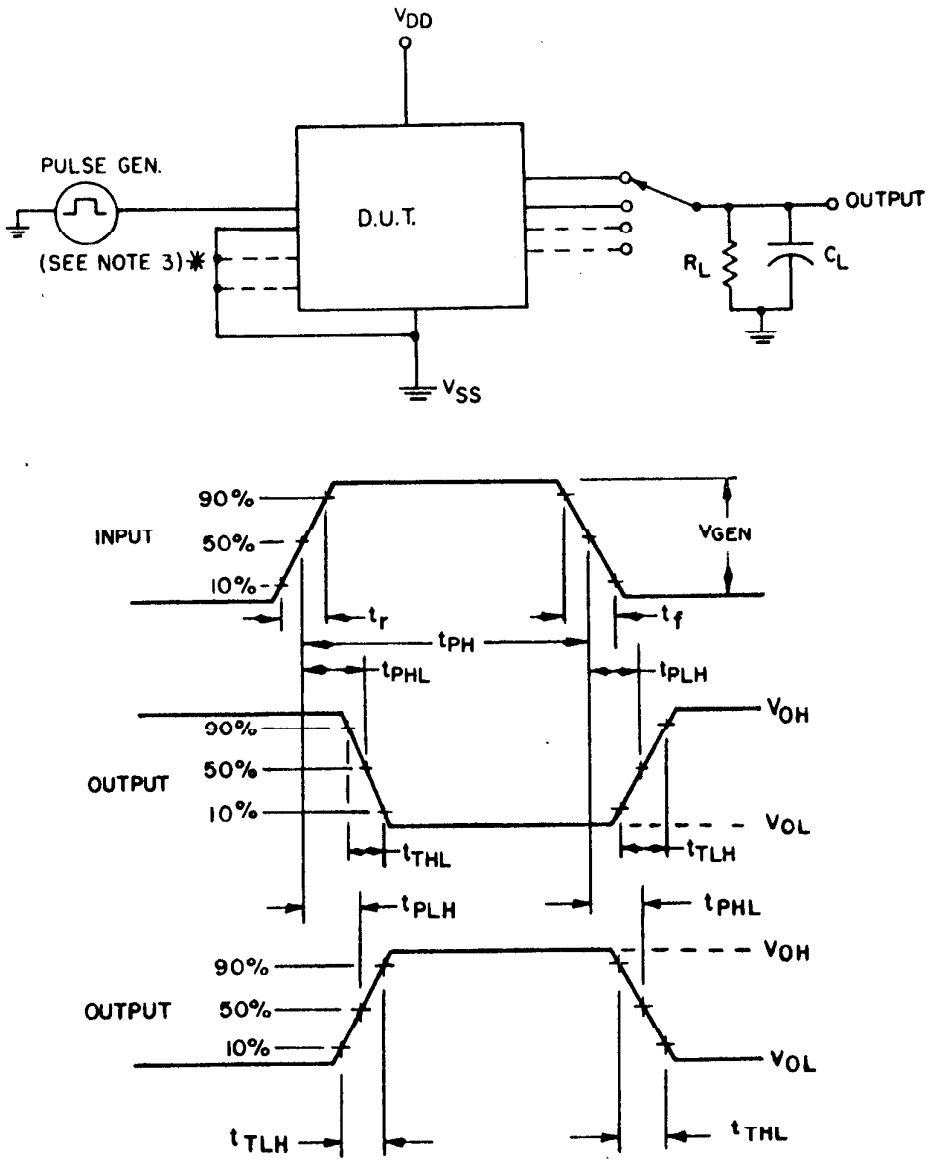

NOTES:
1. The pulse generator has the following characteristics: $V_{GEN} = V_{DD} \pm 1$ percent, $t_{PH} = 1.0 \pm 0.1$ µs, t_f and $t_r \leq 10$ ns.
2. See table III for complete terminal conditions.
3. Asterisk (*) indicates all unused inputs must be tied to V_{SS}.
4. $R_L = 200$ kΩ ±10 percent and $C_L = 50$ pF ±5 percent including wiring and probe capacitance.

FIGURE 6. Switching time test circuit and waveforms for device types 01, 02, 03, 51, 52, and 53.

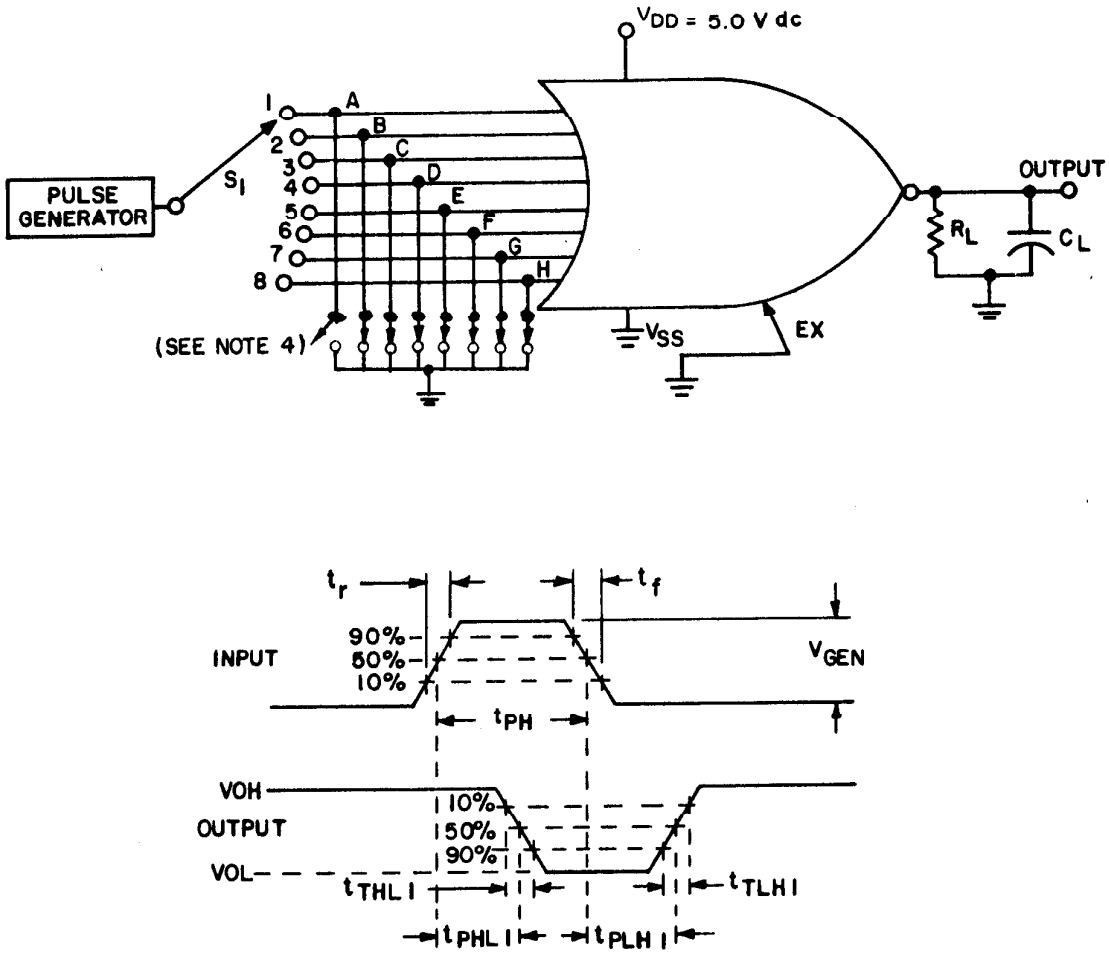

NOTES:
1. The pulse generator has the following characteristics: $V_{GEN} = V_{DD}$ ±1 percent, t_{PH} = 1.0 ±0.1 µs, t_f and t_r < 10 ns.
2. R_L = 200 kΩ ±10 percent and C_L = 50 pF ±5 percent including wiring and probe capacitance.
3. See table III for complete terminal conditions.
4. All inputs are tied to V_{SS} except for input connected to the pulse generator.

FIGURE 7. Switching time test circuit and waveforms for device types 04 and 54 (NOR gate).

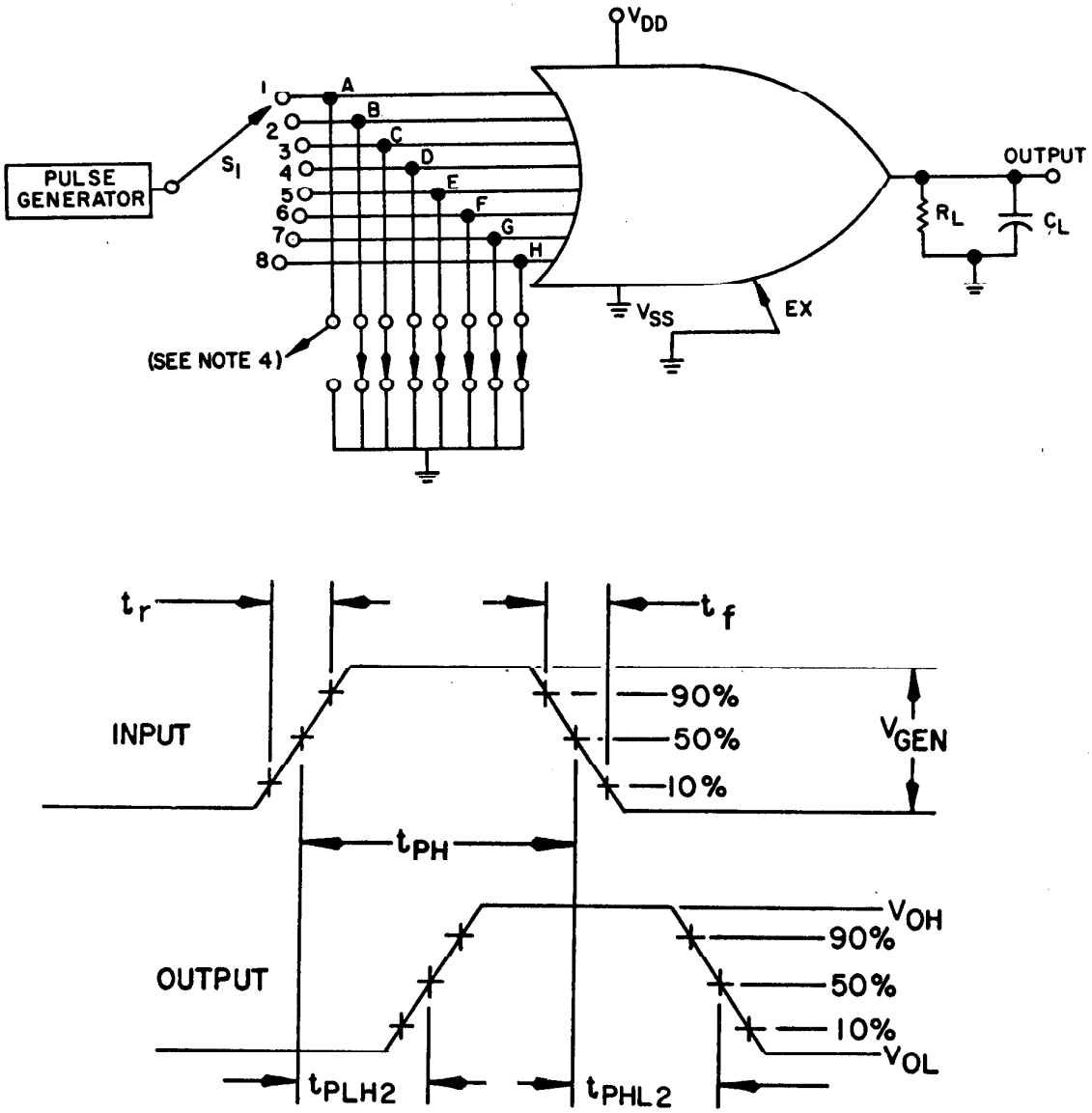

NOTES:
1. The pulse generator has the following characteristics: $V_{GEN} = V_{DD} \pm 1$ percent, $t_{PH} = 1.0 \pm 0.1$ µs, t_f and $t_r \leq 10$ ns.
2. $R_L = 200$ kΩ ±10 percent and $C_L = 50$ pF ±5 percent including wiring and probe capacitance.
3. See table III for complete terminal conditions.
4. All inputs are tied to V_{SS} except for input connected to the pulse generator.

FIGURE 8. Switching time test circuit and waveforms for device types 04 and 54 (OR gate).

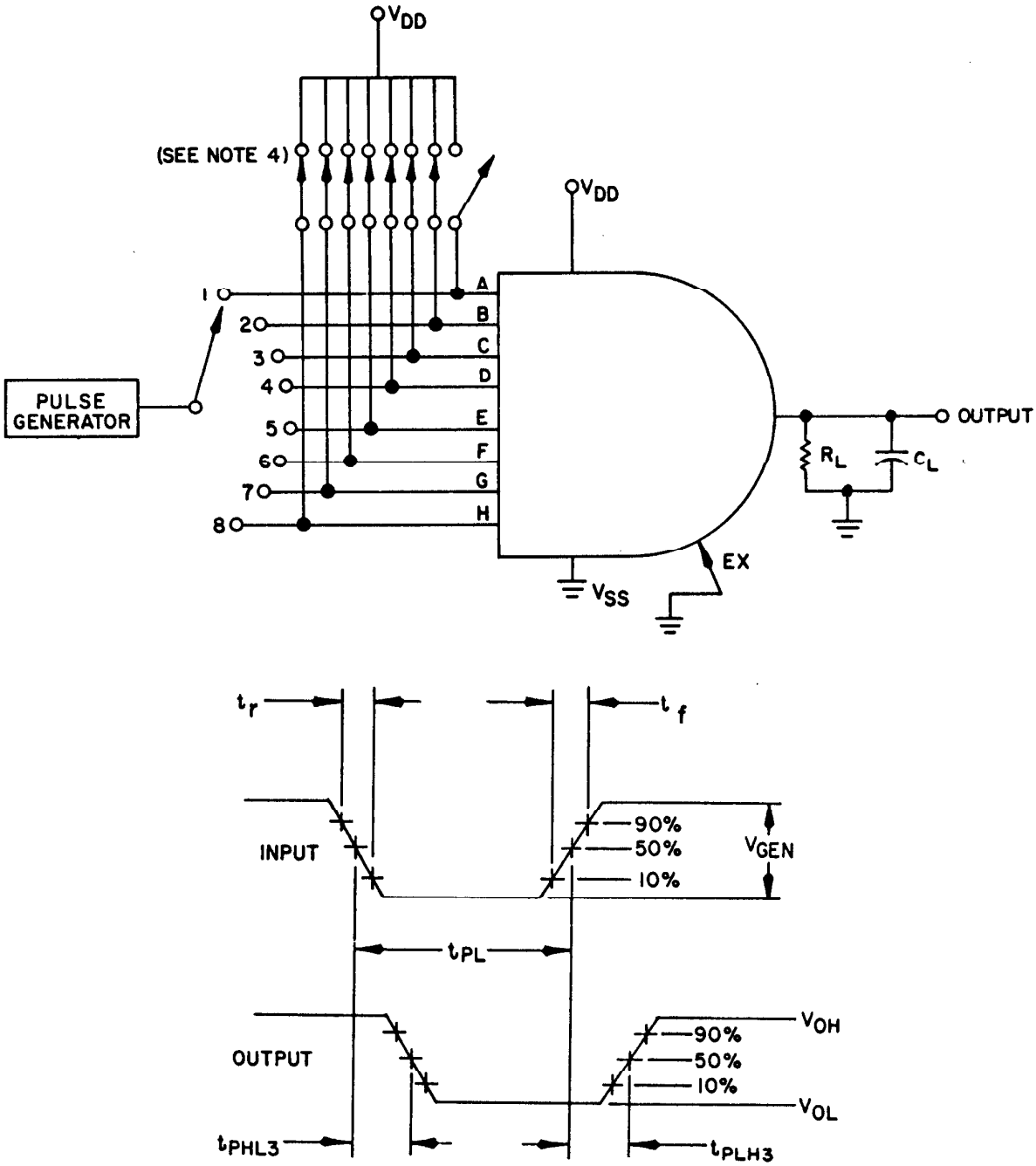

NOTES:
1. The pulse generator has the following characteristics: $V_{GEN} = V_{DD} \pm 1$ percent, $t_{PW} = 1.0 \pm 0.1$ µs, t_f and $t_r \leq 10$ ns.
2. $R_L = 200$ kΩ ±10 percent and $C_L = 50$ pF ±5 percent including wiring and probe capacitance.
3. See table III for complete terminal conditions.
4. All inputs are tied to V_{DD} except for input connected to the pulse generator.

FIGURE 9. Switching time test circuit and waveforms for device types 04 and 54 (AND gate).

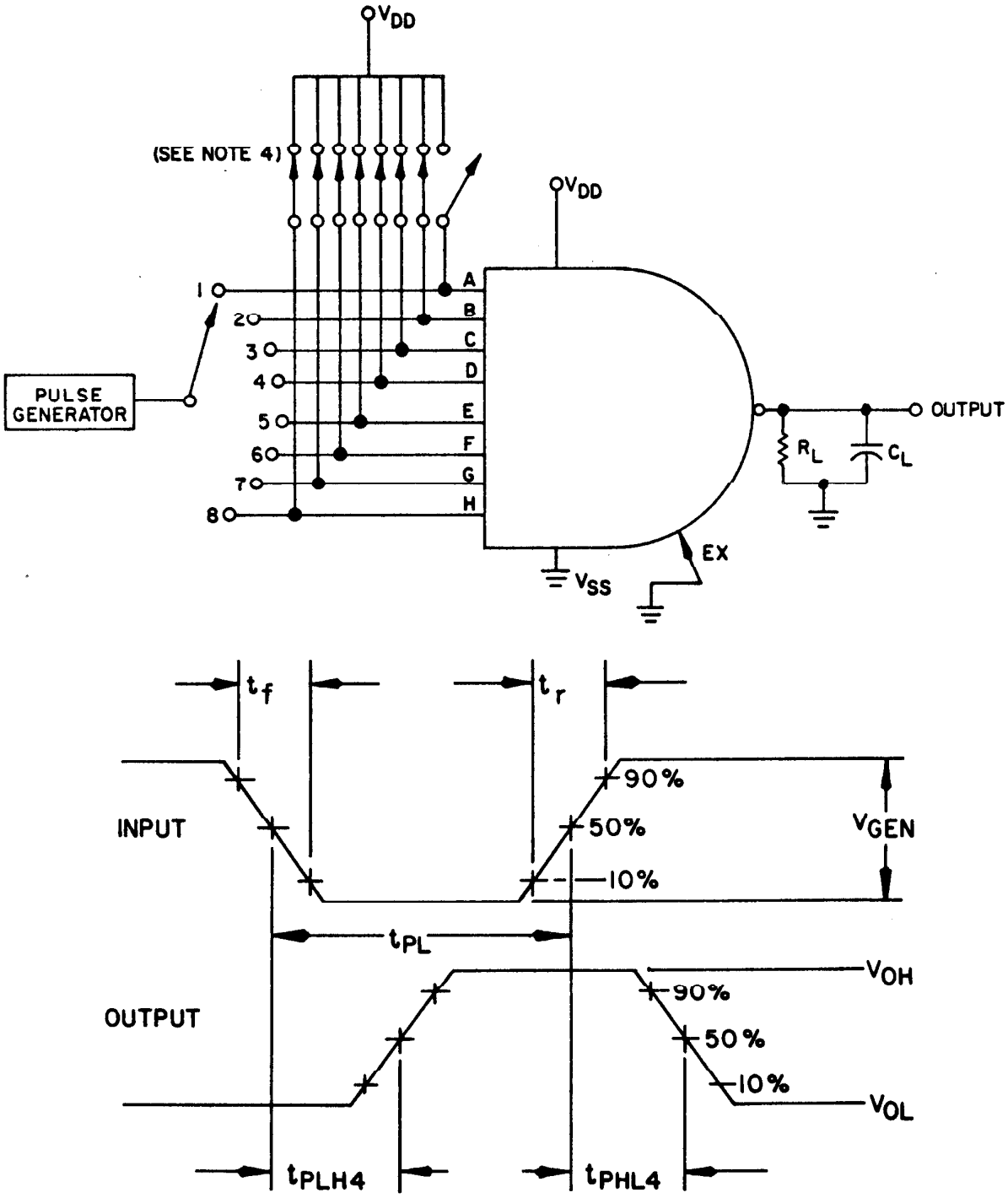

NOTES:
1. The pulse generator has the following characteristics: $V_{GEN} = V_{DD} \pm 1$ percent, $t_{PL} = 1.0 \pm 0.1$ µs, t_f and $t_r < 10$ ns.
2. $R_L = 200$ kΩ ±10 percent and $C_L = 50$ pF ±5 percent including wiring and probe capacitance.
3. See table III for complete terminal conditions.
4. All inputs are tied to V_{DD} except for input connected to the pulse generator.

FIGURE 10. Switching time test circuit and waveforms for device types 04 and 54 (NAND gate).

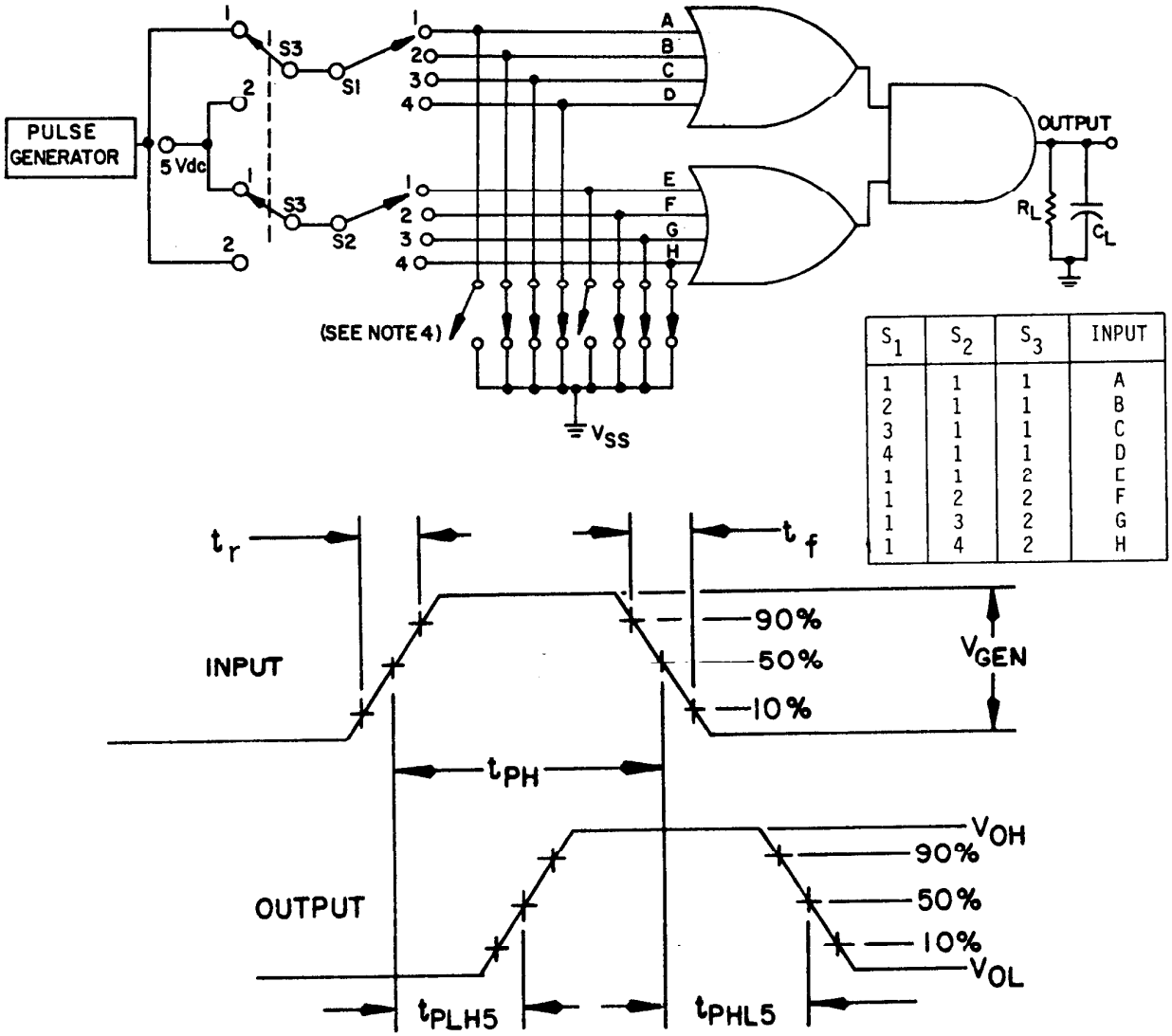

S_1	S_2	S_3	INPUT
1	1	1	A
2	1	1	B
3	1	1	C
4	1	1	D
1	1	2	E
1	2	2	F
1	3	2	G
1	4	2	H

NOTES:
1. The pulse generator has the following characteristics: $V_{GEN} = V_{DD} \pm 1$ percent, $t_{PH} = 1.0 \pm 0.1$ µs, t_f and $t_r \leq 10$ ns.
2. $R_L = 200$ kΩ ±10 percent and $C_L = 50$ pF ±5 percent including wiring and probe capacitance.
3. See table III for complete terminal conditions.
4. All inputs are tied to V_{SS} except for input connected to S1 and S2.

FIGURE 11. Switching time test circuit and waveforms for device types 04 and 54 (OR/AND gate).

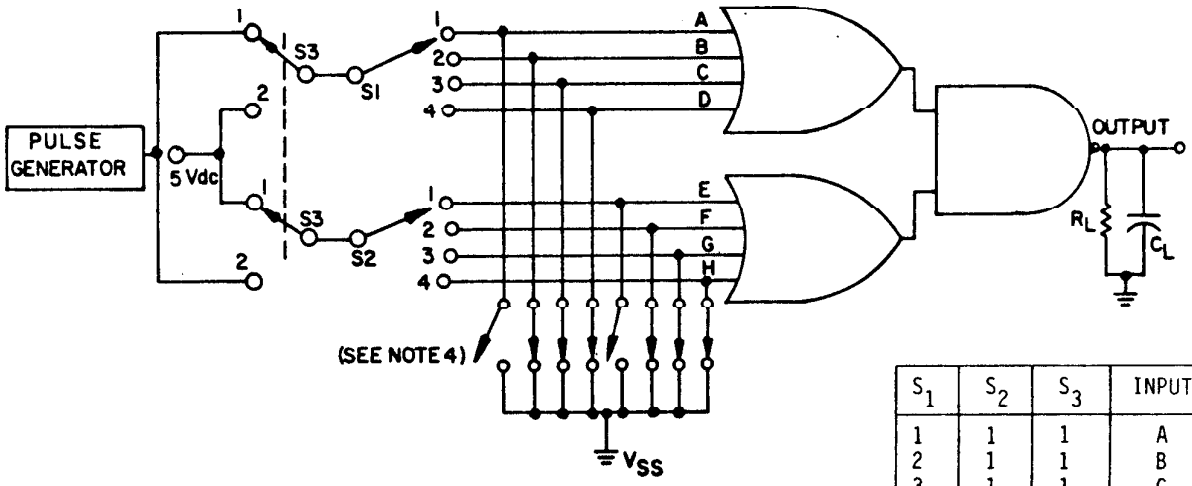

S_1	S_2	S_3	INPUT
1	1	1	A
2	1	1	B
3	1	1	C
4	1	1	D
1	1	2	E
1	2	2	F
1	3	2	G
1	4	2	H

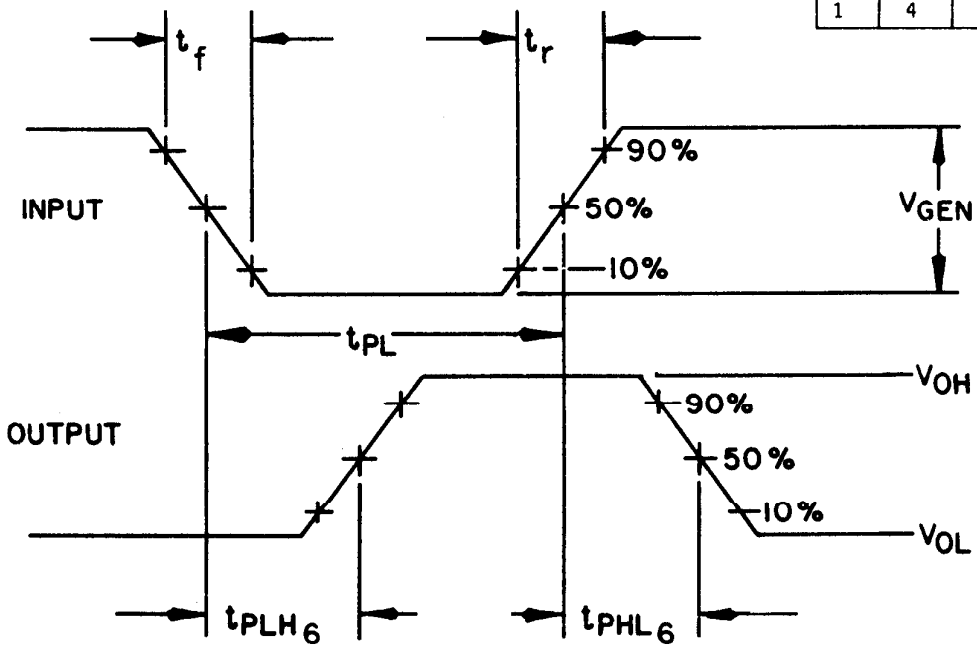

NOTES:
1. The pulse generator has the following characteristics: $V_{GEN} = V_{DD} \pm 1$ percent, $t_{PL} = 1.0 \pm 0.1$ µs, t_f and $t_r \leq 10$ ns.
2. $R_L = 200$ kΩ ±10 percent and $C_L = 50$ pF ±5 percent including wiring and probe capacitance.
3. See table III for complete terminal conditions.
4. All inputs are tied to V_{SS} except for input connected to S1 and S2.

FIGURE 12. Switching time test circuit and waveforms for device types 04 and 54 (OR/NAND gate).

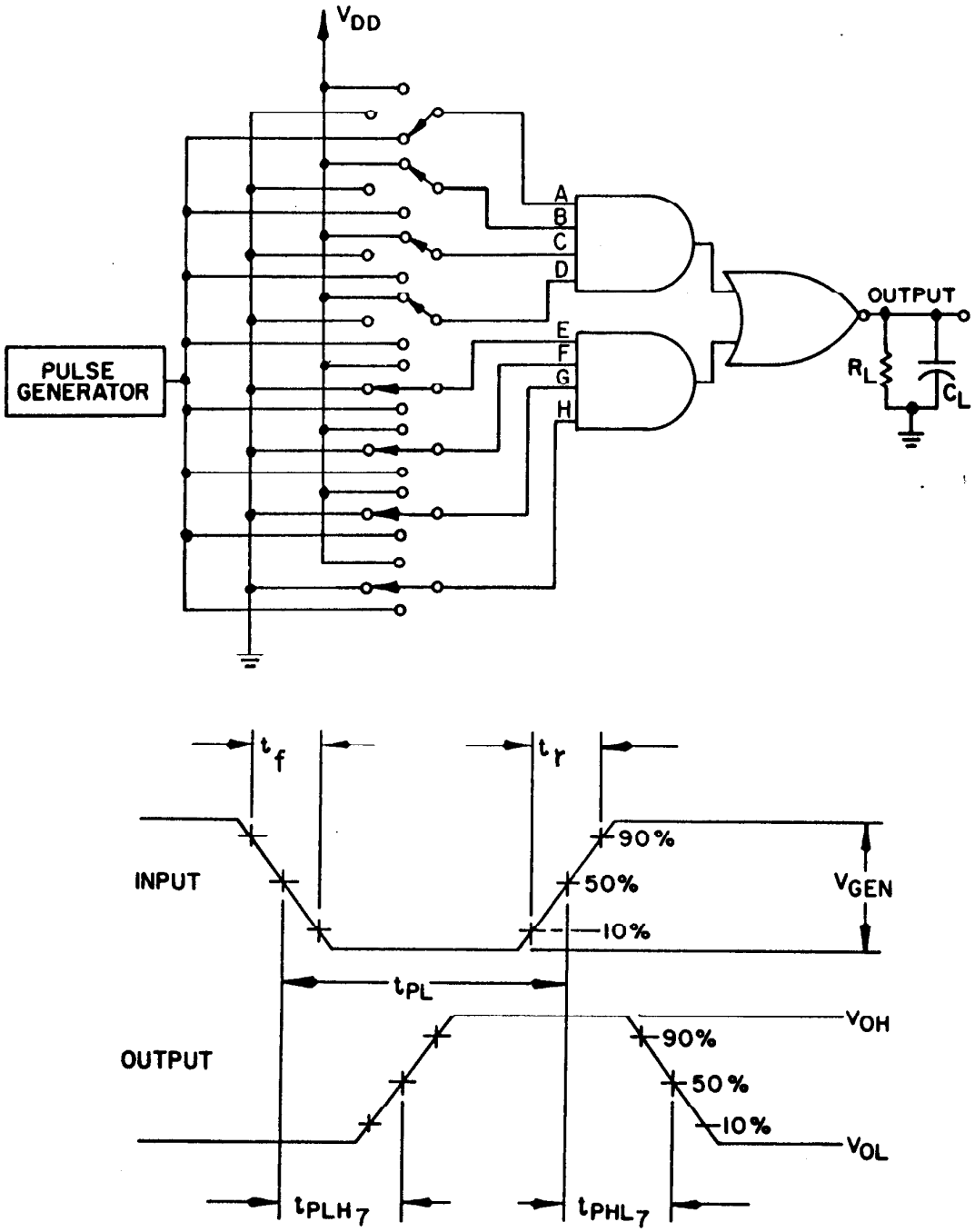

NOTES:
1. The pulse generator has the following characteristics: $V_{GEN} = V_{DD}$ ±1 percent, t_{PL} = 1.0 ±0.1 µs, t_f and $t_r \leq 10$ ns.
2. R_L = 200 kΩ ±10 percent and C_L = 50 pF ±5 percent including wiring and probe capacitance.
3. See table III for complete terminal conditions.

FIGURE 13. Switching time test circuit and waveforms for device types 04 and 54 (AND/NOR gate).

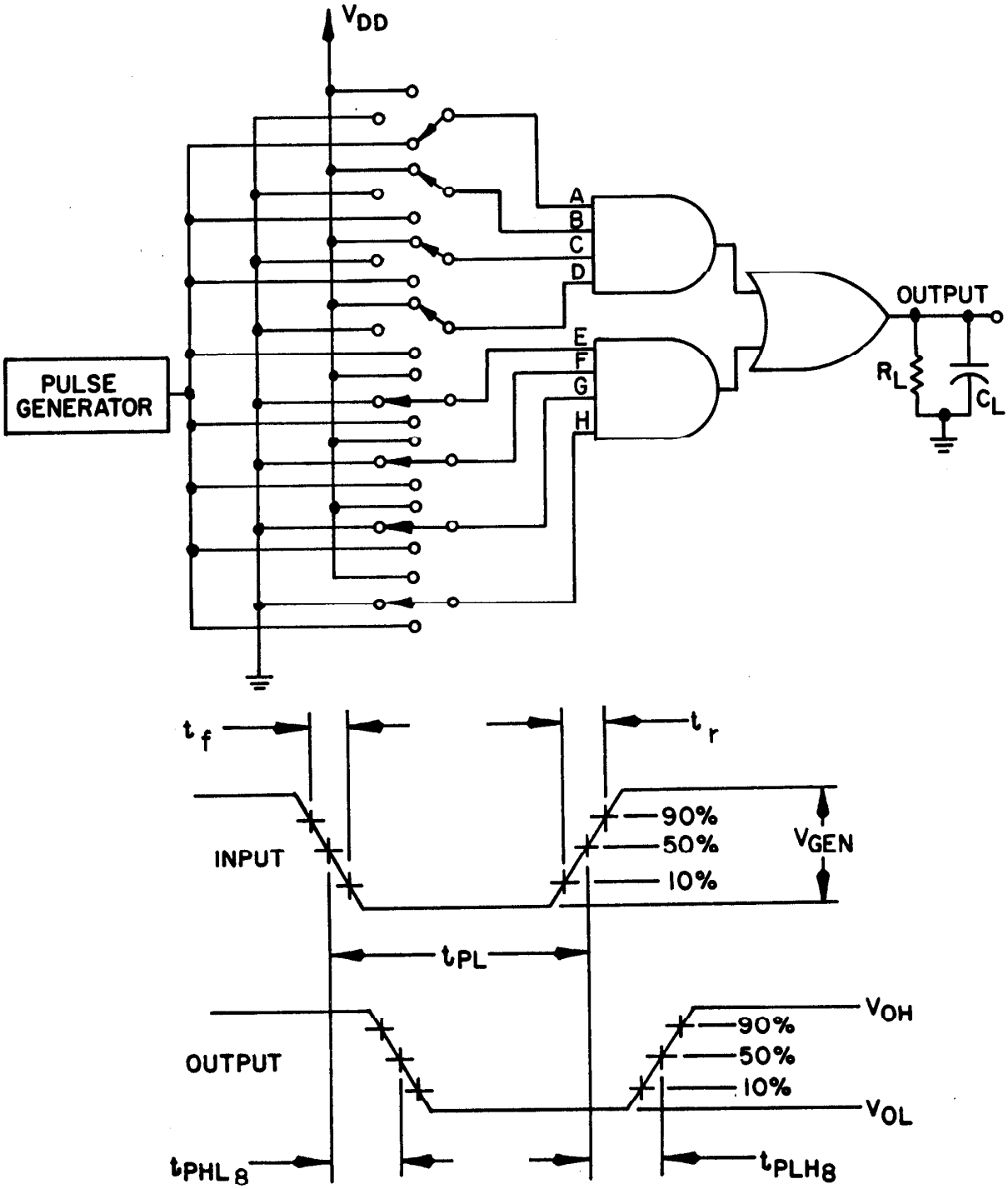

NOTES:
1. The pulse generator has the following characteristics: $V_{GEN} = V_{DD} \pm 1$ percent, $t_{PL} = 1.0 \pm 0.1$ µs, t_f and $t_r < 10$ ns.
2. $R_L = 200$ KΩ ±10 percent and $C_L = 50$ pF ±5 percent including wiring and probe capacitance.
3. See table III for complete terminal conditions.

FIGURE 14. Switching time test circuit and waveforms for device types 04 and 54 (AND/OR gate).

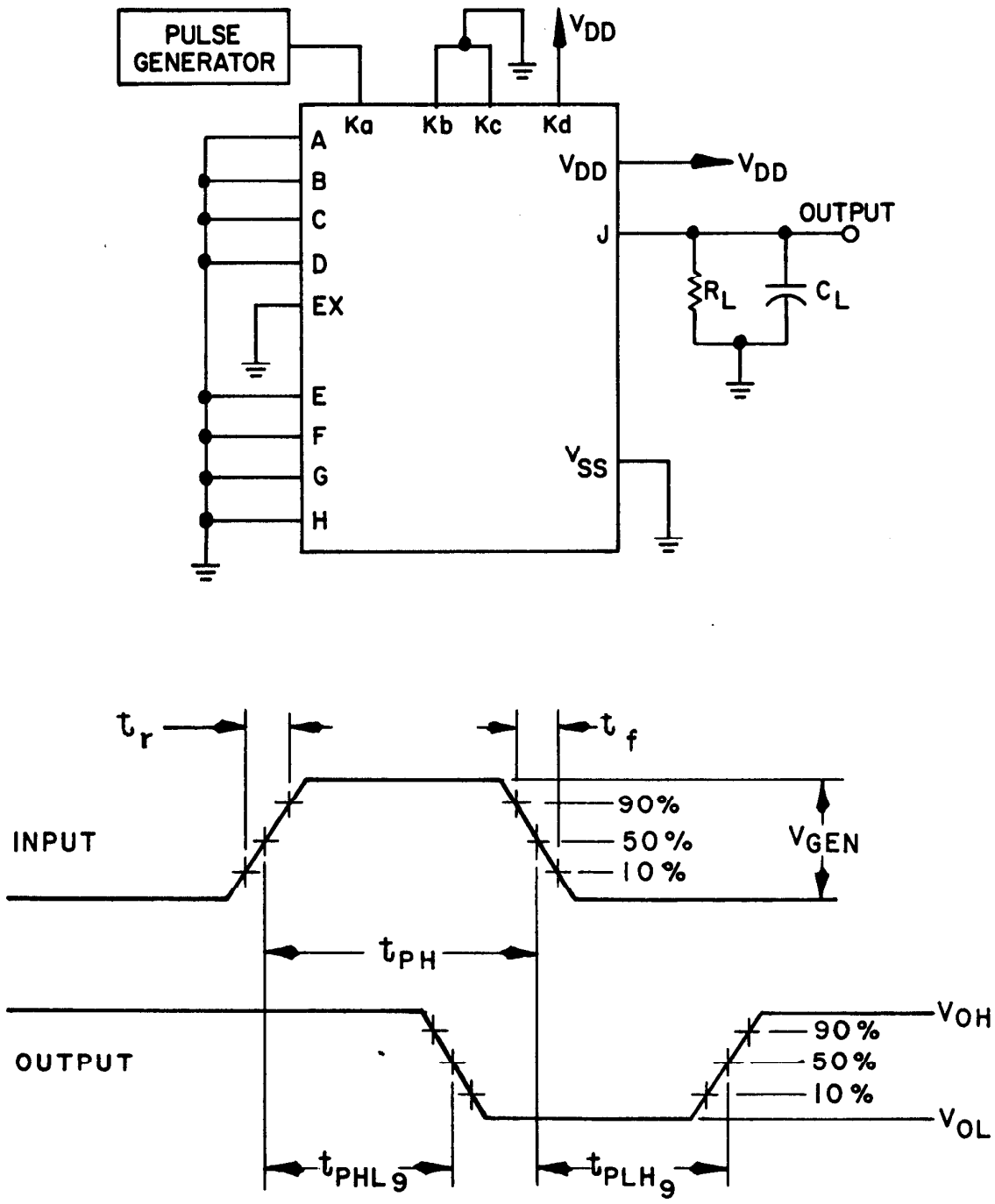

NOTES:
1. The pulse generator has the following characteristics: $V_{GEN} = V_{DD}$ ±1 percent, t_{PH} = 1.0 ±0.1 µs, t_f and $t_r \leq 10$ ns.
2. R_L = 200 kΩ ±10 percent and C_L = 50 pF ±5 percent including wiring and probe capacitance.
3. See table III for complete terminal conditions.

FIGURE 15. Switching time test circuit and waveforms for device types 04 and 54 (Ka to output).

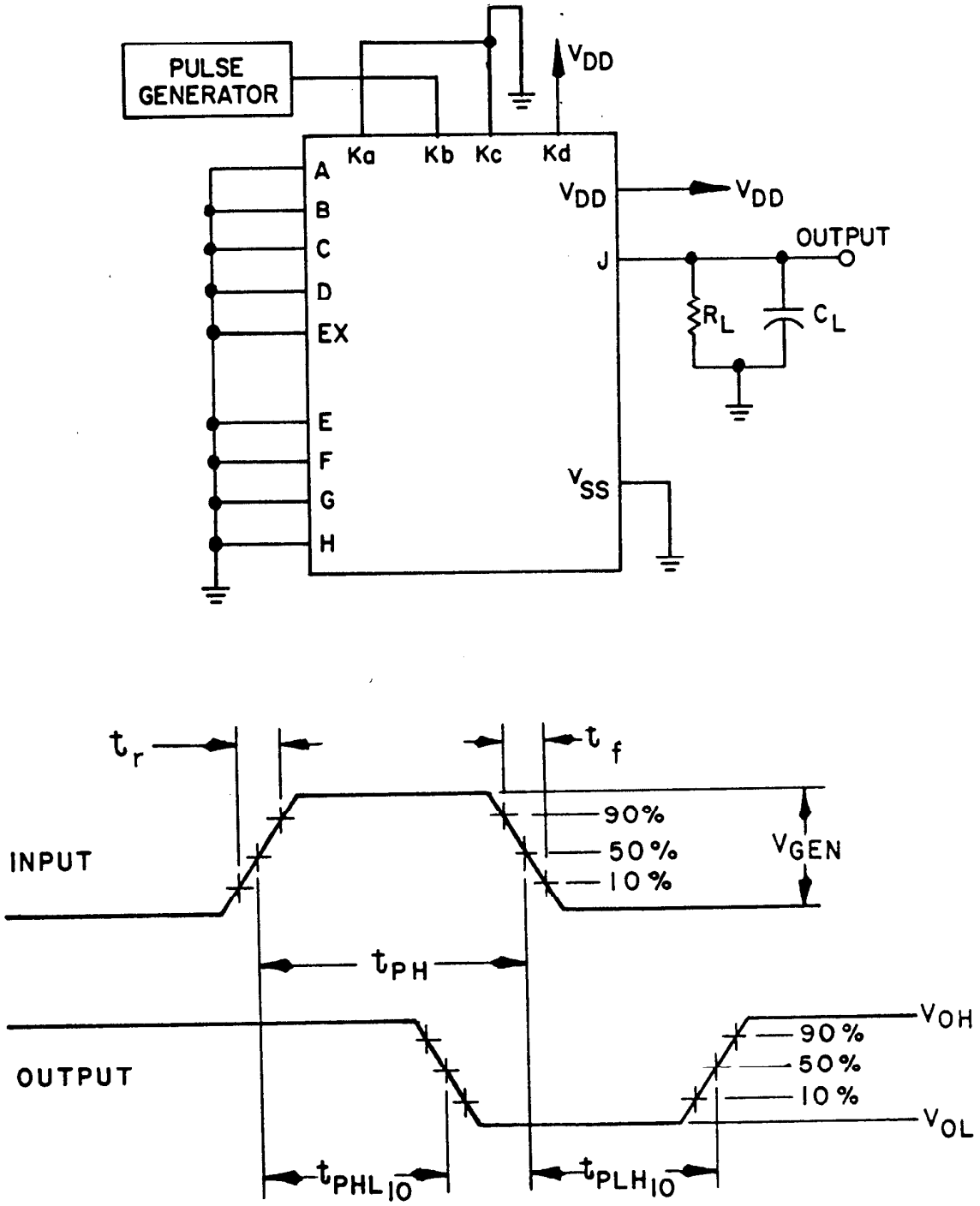

NOTES:
1. The pulse generator has the following characteristics: $V_{GEN} = V_{DD} \pm 1$ percent, $t_{PH} = 1.0 \pm 0.1$ µs, t_f and $t_r \leq 10$ ns.
2. $R_L = 200$ kΩ ±10 percent and $C_L = 50$ pF ±5 percent including wiring and probe capacitance.
3. See table III for complete terminal conditions.

FIGURE 16. Switching time test circuit and waveforms for device types 04 and 54 (Kb to output).

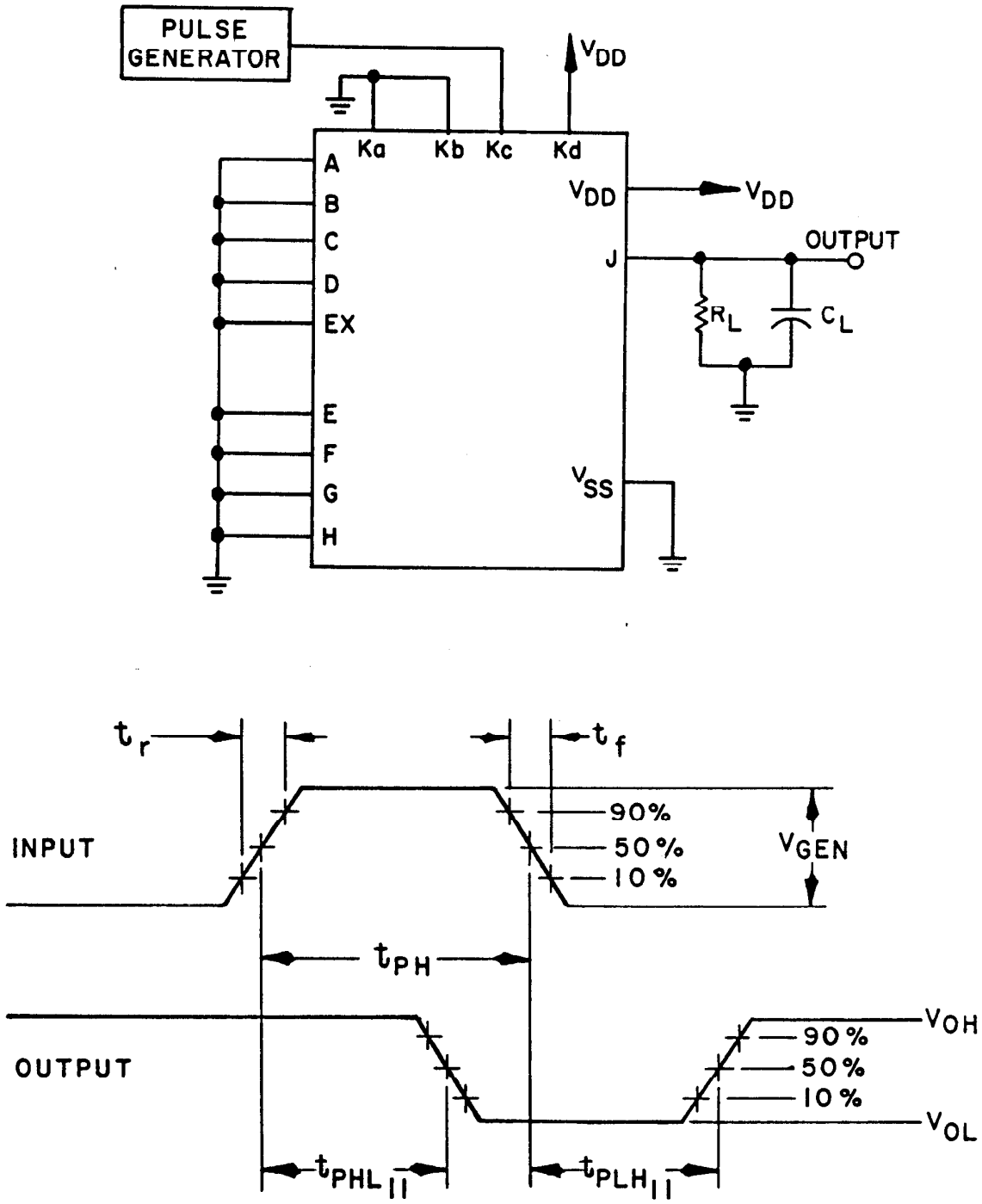

NOTES:
1. The pulse generator has the following characteristics: $V_{GEN} = V_{DD} \pm 1$ percent, $t_{PH} = 1.0 \pm 0.1$ µs, t_f and $t_r \leq 10$ ns.
2. $R_L = 200$ kΩ ±10 percent and $C_L = 50$ pF ±5 percent including wiring and probe capacitance.
3. See table III for complete terminal conditions.

FIGURE 17. Switching time test circuit and waveforms for device types 04 and 54 (Kc to output).

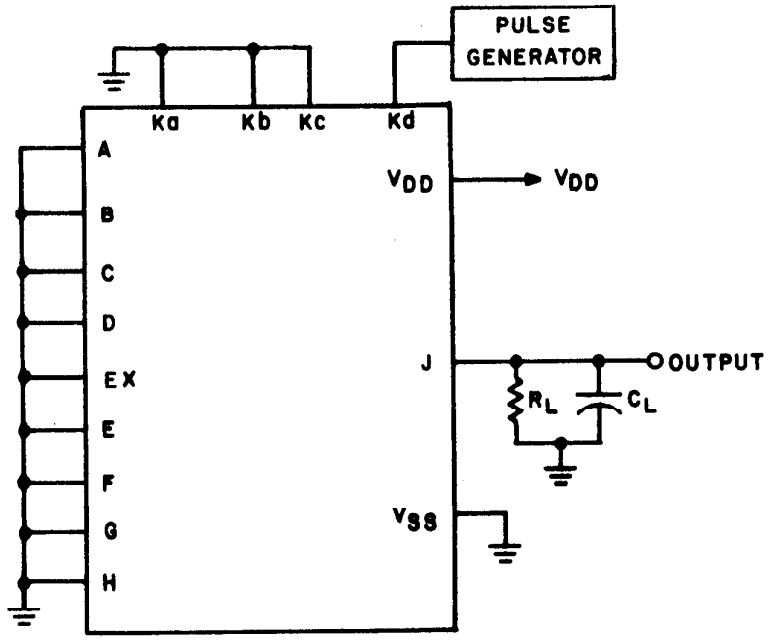

Test circuit
(Kd input to output)

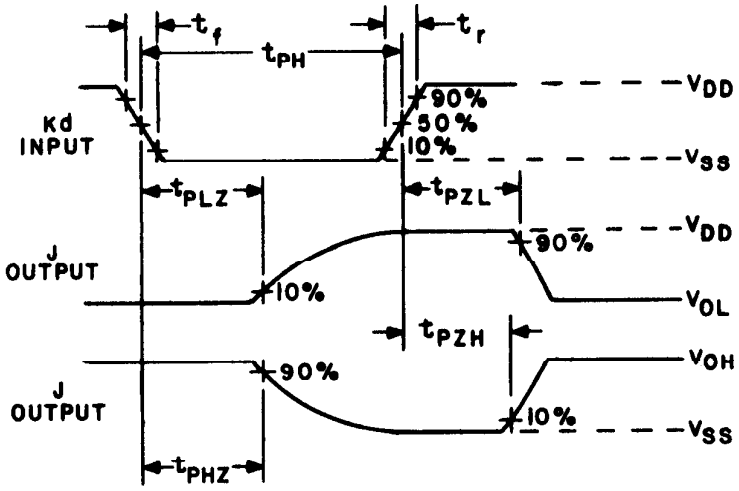

NOTES:
1. The pulse generator has the following characteristics: $V_{GEN} = V_{DD}$ ±1 percent, t_{PH} = 1.0 ±0.1 µs, t_f and $t_r \leq$ 10 ns.
2. R_L = 1 kΩ ±5 percent, C_L = 50 pF ±5 percent including wiring and probe capacitance.
3. See table III for complete terminal conditions.
4. R_L = 1 kΩ ±5 percent to V_{DD} for t_{PLZ}.

FIGURE 18. Switching time test circuit and waveforms for device types 04 and 54 (Kd input to output).

TABLE III. Group A inspection for device type 01.

Symbol	MIL-STD-883 method	Cases A, C, D, X, Y Symbol	Terminal conditions 1/ 2aY	2aS	2A	2bS	2bY	1A	V_{SS}	1bY	3bS	3A
		Test no.	1	2	3	4	5	6	7	8	9	10
$V_{IC(POS)}$		1	(5) 2/	GND			(1) 2/	1 mA		(13) 2/		
		2	"	"	1 mA		"			"		
		3	"	"			"			"		1 mA
$V_{IC(NEG)}$		4	"			GND	"	-1 mA	GND	"	GND	
		5	"		-1 mA	"	"		"	"	"	
		6	"			"	"		"	"	"	-1 mA
I_{SS}	3005	7	"	15.0 V	GND	"	"	GND	"	"	"	GND
		8	"	15.0 V	15.0 V	"	"	15.0 V	"	"	"	15.0 V
V_{OH1}	3006	9	" 3/	4.5 V	GND	"	"	V_{IL1}	"	"	"	GND
		10	" I_{OH1}	"	V_{IL1}	"	"	GND	"	"	"	GND
		11	"	"	GND	"	"	GND	"	"	"	V_{IL1}
V_{OH2}		12	" 4/	5.0 V	GND	"	"	V_{IL1}	"	"	"	GND
		13	" I_{OH2}	"	V_{IL1}	"	"	GND	"	"	"	GND
		14	"	"	GND	"	"	GND	"	"	"	V_{IL1}
V_{OH3}		15	"	"	GND	"	"	V_{IL1}	"	"	"	GND
		16	"	"	V_{IL1} 5/	"	"	GND	"	"	"	GND
		17	"	"	GND	"	"	GND	"	"	"	V_{IL1}
V_{OH4}		18	"	12.5 V	GND	"	"	V_{IL2}	"	"	"	GND
		19	"	"	V_{IL2} 5/	"	"	GND	"	"	"	GND
		20	"	"	GND	"	"	GND	"	"	"	V_{IL2}
V_{OL1}	3007	21	" 7/	5.5 V	GND	"	"	V_{IH1}	"	"	"	GND
		22	" I_{OL1}	"	V_{IH1} 3/	"	"	GND	"	"	"	GND
		23	"	"	GND	"	"	GND	"	"	"	V_{IH1}
V_{OL2}		24	" 9/	5.0 V	GND	"	"	V_{IH1}	"	"	"	GND
		25	" I_{OL2}	"	V_{IHL}	"	"	GND	"	"	"	GND
		26	"	"	GND	"	"	GND	"	"	"	V_{IH1}
V_{OL3}		27	"	"	GND	"	"	V_{IH1}	"	"	"	GND
		28	"	"	V_{IHL}	"	"	GND	"	"	"	GND
		29	"	"	GND	"	"	GND	"	"	"	V_{IH1}
V_{OL4}		30	"	12.5 V	GND	"	"	V_{IH2}	"	"	"	GND
		31	"	"	V_{IH2} 10/	"	"	GND	"	"	"	GND
		32	"	"	GND	"	"	GND	"	"	"	V_{IH2}
I_{IH1} 11/		33	"	15.0 V	15.0 V	"	"	15.0 V	"	"	"	15.0 V
I_{IH2}		34	"	"	GND	"	"	15.0 V	"	"	"	GND
		35	"	"	15.0 V	"	"	GND	"	"	"	GND
		36	"	"	GND	"	"	"		"	"	15.0 V
I_{IL1} 11/	3009	37	"	"	GND	"	"	"	"	"	"	GND
I_{IL2}		38	"	"	15.0 V	"	"	"		"	"	15.0 V
		39	"	"	GND	"	"	15.0 V	"	"	"	15.0 V
		40	"	"	15.0 V	"	"	15.0 V	"	"	"	GND

See footnotes at end of device type 01.

TABLE III. Group A inspection for device type 01 - Continued.

Symbol	MIL-STD-883 method	Cases A, C, D, X, Y Symbol	Terminal conditions 1/ 3aS	3Y	1aY	V_{DD}	Measured terminal	Test limits Subgroup 1 T_C = +25°C Min	Subgroup 1 Max	Subgroup 2 T_C = +125°C Min	Subgroup 2 Max	Subgroup 3 T_C = -55°C Min	Subgroup 3 Max	Unit
		Test no.	11	12	13	14								
$V_{IC(POS)}$		1	GND		(8) 2/	GND	1A		1.5					V
		2	"		"	"	2A		"					"
		3	"		"	"	3A		"					"
$V_{IC(NEG)}$		4			"		1A		-5					"
		5			"		2A		"					"
		6			"		3A		"					"
I_{SS}	3005	7	15.0 V		"	15.0 V	V_{SS}		-50		-500			nA
		8	15.0 V		"	15.0 V	V_{SS}		-50		-500			nA
V_{OH1}	3006	9	4.5 V		" I_{OH1}	4.5 V	1aY	2.5		2.5		2.5		V
		10	"		"	"	2aY	"		"		"		"
		11	"	I_{OH1}	"	"	3Y	"		"		"		"
V_{OH2}		12	5.0 V		" I_{OH2}	5.0 V	1aY	4.5		4.5		4.5		"
		13	"		"	"	2aY	"		"		"		"
		14	"	I_{OH2}	"	"	3Y	"		"		"		"
V_{OH3}		15	"		"	"	1aY	4.95		4.95		4.95		"
		16	"		"	"	2aY	"		"		"		"
		17	"		"	"	3Y	"		"		"		"
V_{OH4}		18	12.5 V		"	12.5 V	1aY	11.25		11.25		11.25		"
		19	"		"	"	2aY	"		"		"		"
		20	"		"	"	3Y	"		"		"		"
V_{OL1}	3007	21	5.5 V		" I_{OL1}	5.5 V	1aY		0.4		0.5		0.4	"
		22	"		"	"	2aY		"		"		"	"
		23	"	I_{OL1}	"	"	3Y		"		"		"	"
V_{OL2}		24	5.0 V		" I_{OL2}	5.0 V	1aY		0.5		"		0.5	"
		25	"		"	"	2aY		"		"		"	"
		26	"	I_{OL2}	"	"	3Y		"		"		"	"
V_{OL3}		27	"		"	"	1aY		50		50		50	mV dc
		28	"		"	"	2aY		"		"		"	"
		29	"		"	"	3Y		"		"		"	"
V_{OL4}		30	12.5 V		"	12.5 V	1aY		1.25		1.25		1.25	V
		31	"		"	"	2aY		"		"		"	"
		32	"		"	"	3Y		"		"		"	"
I_{IH1} 11/		33	15.0 V		"	15.0 V	All inputs together		3.0					nA
I_{IH2}		34	"		"	"	1A		1.0		45			"
		35	"		"	"	2A		"		"			"
		36	"		"	"	3A		"		"			"
I_{IL1} 11/	3009	37	"		"	"	All inputs together		-3.0					"
I_{IL2}		38	"		"	"	1A		-1.0		-45			"
		39	"		"	"	2A		"		"			"
		40	"		"	"	3A		"		"			"

TABLE III. Group A inspection for device type 01 - Continued.

Symbol	MIL-STD-883 method	Cases A, C,D,X,Y Symbol	Terminal conditions 1/ 2aY	2aS	2A	2bS	2bY	1A	V_{SS}	1bY	3bS	3A
		Test no.	1	2	3	4	5	6	7	8	9	10
C_I	3012	41 42 43	(5) 2/ " "	GND " "	12/	GND " "		12/	GND " "		GND " "	12/
t_{PHL}	3003 (Fig.6)	44 45 46	(5) " "	5.0 V " "	GND IN GND	GND " "	(1) " "	IN GND GND	GND " "	(13) " "	GND " "	GND GND IN
t_{PLH}		47 48 49	" " "	" " "	GND IN GND	" " "	" " "	IN GND GND	" " "	" " "	" " "	GND GND IN
t_{THL}	3004 (Fig.6)	50 51 52	" " "	" " "	GND IN GND	" " "	" " "	IN GND GND	" " "	" " "	" " "	GND GND IN
t_{TLH}		53 54 55	" " "	" " "	GND IN GND	" " "	" " "	IN GND GND	" " "	" " "	" " "	GND GND IN

1/ Pins not designated may be "high" level logic, "low" level logic, or open. Exceptions are as follows: For $V_{IC(POS)}$ tests, the V_{SS} terminal shall be open; for $V_{IC(NEG)}$ tests, the V_{DD} terminal shall be open; for I_{SS} tests, the outputs shall be open.

2/ Terminals in parentheses are connected together as indicated by the included number.

3/ I_{OH1} = -0.1 mA at +25°C; -0.1 mA at +125°C; -0.1 mA at -55°C.

4/ I_{OH2} = -0.30 mA at +25°C; -0.21 mA at +125°C; -0.375 mA at -55°C.

5/ V_{IL1} = 0.9 V at +25°C; 0.65 V at +125°C; 0.95 V at -55°C.

6/ V_{IL2} = 2.25 V at +25°C; 1.95 V at +125°C; 2.40 V at -55°C.

7/ I_{OL1} = 0.23 mA at +25°C; 0.23 mA at +125°C; 0.23 mA at -55°C.

8/ V_{IH1} = 3.95 V at +25°C; 3.85 V at +125°C; 4.05 V at -55°C.

9/ I_{OL2} = 600 µA at +25°C; 400 µA at +125°C; 750 µA at -55°C.

10/ V_{IH2} = 10.25 V at +25°C; 10.0 V at +125°C; 10.5 V at -55°C.

11/ The device manufacturer may, at his option, measure I_{IL} and I_{IH} at +25°C for each individual input or measure all inputs together.

12/ See 4.4.1c.

TABLE III. Group A inspection for device type 01 - Continued.

Symbol	MIL-STD-883 method	Cases A, C,D,X,Y Symbol	Terminal conditions 1/ 3aS	3Y	1aY	V_{DD}	Measured terminal	Test limits Subgroup 4 T_C = +25°C Min	Max					Unit
		Test no.	11	12	13	14								
C_I	3012	41	GND			GND	1A		12					pF
		42	"			"	2A		"					"
		43	"			"	3A		"					"
								Subgroup 9 T_C = +25°C Min	Max	Subgroup 10 T_C = +125°C Min	Max	Subgroup 11 T_C = -55°C Min	Max	
t_{PHL}	3003 (Fig.6)	44	5.0 V		(8)	5.0 V	1A to 1aY	6	170	9	255	6	170	ns
		45	"		"	"	2A to 2aY	"	"	"	"	"	"	"
		46	"		"	"	3A to 3Y	"	"	"	"	"	"	"
t_{PLH}		47	"		"	"	1A to 1aY	"	110	"	165	"	110	"
		48	"		"	"	2A to 2aY	"	"	"	"	"	"	"
		49	"		"	"	3A to 3Y	"	"	"	"	"	"	"
t_{THL}	3004 (Fig.6)	50	"		"	"	1aY	"	240	"	360	"	240	"
		51	"		"	"	2aY	"	"	"	"	"	"	"
		52	"		"	"	3Y	"	"	"	"	"	"	"
t_{TLH}		53	"		"	"	1aY	"	160	"	240	"	160	"
		54	"		"	"	2aY	"	"	"	"	"	"	"
		55	"		"	"	3Y	"	"	"	"	"	"	"

TABLE III. Group A inspection for device type 02.

Symbol	MIL-STD-883 method	Cases E, F, Z Symbol	Terminal conditions B4	A3	B3	A2	B2	A1	B1	V_{SS}	Ka	D1
		Test no.	1	2	3	4	5	6	7	8	9	10
$V_{IC(POS)}$		1							1 mA			
		2						1 mA				
		3					1 nA					
		4				1 mA						
		5			1 mA							
		6		1 mA								
		7	1 mA									
		8										
		9									1 mA	
		10										
$V_{IC(NEG)}$		11							-1 mA	GND		
		12						-1 mA		"		
		13					-1 mA			"		
		14				-1 mA				"		
		15			-1 mA					"		
		16		-1 mA						"		
		17	-1 mA							"		
		18								"		
		19								"	-1 mA	
		20								"		
I_{SS}	3005	21	GND	15.0 V	GND	15.0 V	GND	15.0 V	GND	"	15.0 V	
		22	GND	GND	GND	GND	GND	GND	GND	"	"	
		23	15.0 V	GND	15.0 V	GND	15.0 V	GND	15.0 V	"	"	
		24	15.0 V	15.0 V	15.0 V	15.0 V	15.0 V	15.0 V	15.0 V	"	GND	
V_{OH1}	3006	25	V_{IH1} 2/	GND	GND	GND	GND	GND	GND	"	4.5 V	
		26	GND	V_{IH1}	GND	"	"	"	"	"	"	
		27	"	GND	V_{IH1}	"	"	"	"	"	"	
		28	"	"	GND	V_{IH1}	"	"	"	"	"	
		29	"	"	"	GND	V_{IH1}	"	"	"	"	
		30	"	"	"	"	GND	V_{IH1}	"	"	"	I_{OH1} 3/
		31	"	"	"	"	"	GND	V_{IH1}	"	"	I_{OH1}
		32	"	"	"	"	"	"	GND	"	"	
V_{OH2}		33	V_{IH1} 2/	"	"	"	"	"	"	"	5.0 V	
		34	GND	V_{IH1}	"	"	"	"	"	"	"	
		35	"	GND	V_{IH1}	"	"	"	"	"	"	
		36	"	"	GND	V_{IH1}	"	"	"	"	"	
		37	"	"	"	GND	V_{IH1}	"	"	"	"	
		38	"	"	"	"	GND	V_{IH1}	"	"	"	I_{OH2} 4/
		39	"	"	"	"	"	GND	V_{IH1}	"	"	I_{OH2}
		40	"	"	"	"	"	"	GND	"	"	
V_{OH3}		41	V_{IH1} 2/	"	"	"	"	"	"	"		
		42	GND	V_{IH1}	"	"	"	"	"	"		
		43	"	GND	V_{IH1}	"	"	"	"	"		
		44	"	"	GND	V_{IH1}	"	"	"	"		
		45	"	"	"	GND	V_{IH1}	"	"	"		
		46	"	"	"	"	GND	V_{IH1}	"	"		
		47	"	"	"	"	"	GND	V_{IH1}	"		
		48	"	"	"	"	"	"	GND	"		
V_{OH4} 5/		49	V_{IH2} 5/	"	V_{IH2} 5/	"	V_{IH2} 5/	"	V_{IH2} 5/	"		
		50	"	"	"	"	"	"	"	"		
		51	"	"	"	"	"	"	"	"		
		52	"	"	"	"	"	"	"	"		
		53	GND	V_{IH2} 5/	GND	V_{IH2} 5/	GND	V_{IH2} 5/	GND	"		
		54	"	"	"	"	"	"	"	"		
		55	"	"	"	"	"	"	"	"		
		56	"	"	"	"	"	"	"	"		

See footnotes at end of device type 02.

TABLE III. Group A inspection for device type 02 - Continued.

Symbol	MIL-STD-883 method	Cases E, F, Z Symbol	Terminal conditions 1/ D2	D3	D4	Kb	A4	V_{DD}	Measured terminal	Test limits Subgroup 1 T_t = +25°C Min	Max	Subgroup 2 T_C = +125°C Min	Max	Subgroup 3 T_C = -55°C Min	Max	Unit
		Test no.	11	12	13	14	15	16								
$V_{IC(POS)}$		1						GND	B1		1.5					V
		2						"	A1		"					"
		3						"	B2		"					"
		4						"	A2		"					"
		5						"	B3		"					"
		6						"	A3		"					"
		7						"	B4		"					"
		8					1 mA	"	A4		"					"
		9						"	Ka		"					"
		10				1 mA		"	Kb		"					"
$V_{IC(NEG)}$		11							B1		-6.0					"
		12							A1		"					"
		13							B2		"					"
		14							A2		"					"
		15							B3		"					"
		16							A3		"					"
		17							B4		"					"
		18					-1 mA		A4		"					"
		19							Ka		"					"
		20				-1 mA			Kb		"					"
I_{SS}	3005	21				15.0 V	15.0 V	15.0 V	V_{SS}		-75		-750			nA
		22				"	GND	"	"		"		"			"
		23				"	GND	"	"		"		"			"
		24				GND	15.0 V	"	"		"		"			"
V_{OH1}	3006	25			I_{OH1}	4.5 V	GND	4.5 V	D4	2.5		2.5		2.5		V
		26		I_{OH1}		"	"	"	D3	"		"		"		"
		27		I_{OH1}		"	"	"	D3	"		"		"		"
		28	I_{OH1}			"	"	"	D2	"		"		"		"
		29	I_{OH1}			"	"	"	D2	"		"		"		"
		30				"	"	"	D1	"		"		"		"
		31				"	"	"	D1	"		"		"		"
		32			I_{OH1}	"	V_{IH1}	"	D4	"		"		"		"
V_{OH2}		33			I_{OH2}	5.0 V	GND	5.0 V	D4	4.5		4.5		4.5		"
		34		I_{OH2}		"	"	"	D3	"		"		"		"
		35		I_{OH2}		"	"	"	D3	"		"		"		"
		36	I_{OH2}			"	"	"	D2	"		"		"		"
		37	I_{OH2}			"	"	"	D2	"		"		"		"
		38				"	"	"	D1	"		"		"		"
		39				"	"	"	D1	"		"		"		"
		40			I_{OH2}	"	V_{IH1}	"	D4	"		"		"		"
V_{OH3}		41				"	GND	"	D4	4.95		4.95		4.95		"
		42				"	"	"	D3	"		"		"		"
		43				"	"	"	D3	"		"		"		"
		44				"	"	"	D2	"		"		"		"
		45				"	"	"	D2	"		"		"		"
		46				"	"	"	D1	"		"		"		"
		47				"	"	"	D1	"		"		"		"
		48				"	V_{IH1}	"	D4	"		"		"		"
V_{OH4} 5/		49				12.5 V	GND	12.5 V	D4	11.25		11.25		11.25		"
		50				"	"	"	D3	"		"		"		"
		51				"	"	"	D2	"		"		"		"
		52				"	"	"	D1	"		"		"		"
		53				"	V_{IH2} 5/	"	D4	"		"		"		"
		54				"	"	"	D3	"		"		"		"
		55				"	"	"	D2	"		"		"		"
		56				"	"	"	D1	"		"		"		"

TABLE III. Group A inspection for device type 02 - Continued.

Symbol	MIL-STD-883 method	Cases E, F, Z Symbol	Terminal conditions B4	A3	B3	A2	B2	A1	B1	V_{SS}	Ka	D1
		Test no.	1	2	3	4	5	6	7	8	9	10
V_{OL1}	3007	57	5.5 V	5.5 V	5.5 V	5.5 V	5.5 V	5.5 V	5.5 V	GND	V_{IL1} 6/	
		58	"	"	"	"	"	"	"	"	"	
		59	"	"	"	"	"	"	"	"	"	
		60	"	"	"	"	"	"	"	"	"	I_{OL1}
		61	V_{IL1}	V_{IL1}	V_{IL1}	V_{IL1}	V_{IL1}	V_{IL1}	V_{IL1}	"	5.5 V	
		62								"	"	
		63	"	"	"	"	"	"	"	"	"	
		64	"	"	"	"	"	"	"	"	"	I_{OL1}
V_{OL2}		65	5.0 V	5.0 V	5.0 V	5.0 V	5.0 V	5.0 V	5.0 V	"	V_{IL1}	
		66	"	"	"	"	"	"	"	"	"	
		67	"	"	"	"	"	"	"	"	"	
		68	"	"	"	"	"	"	"	"	"	I_{OL2}
		69	V_{IL1}	V_{IL1}	V_{IL1}	V_{IL1}	V_{IL1}	V_{IL1}	V_{IL1}	"	5.0 V	
		70								"	"	
		71	"	"	"	"	"	"	"	"	"	
		72	"	"	"	"	"	"	"	"	"	I_{OL2}
V_{OL3}		73	5.0 V	5.0 V	5.0 V	5.0 V	5.0 V	5.0 V	5.0 V	"	V_{IL1}	
		74	"	"	"	"	"	"	"	"	"	
		75	"	"	"	"	"	"	"	"	"	
		76	"	"	"	"	"	"	"	"	"	
		77	V_{IL1}	V_{IL1}	V_{IL1}	V_{IL1}	V_{IL1}	V_{IL1}	V_{IL1}	"	5.0 V	
		78								"	"	
		79	"	"	"	"	"	"	"	"	"	
		80	"	"	"	"	"	"	"	"	"	
V_{OL4}		81	12.5 V	12.5 V	12.5 V	12.5 V	12.5 V	12.5 V	12.5 V	"	V_{IL2} 9/	
		82	"	"	"	"	"	"	"	"	"	
		83	"	"	"	"	"	"	"	"	"	
		84	"	"	"	"	"	"	"	"	"	
		85	V_{IL2}	V_{IL2}	V_{IL2}	V_{IL2}	V_{IL2}	V_{IL2}	V_{IL2}	"	12.5 V	
		86								"	"	
		87	"	"	"	"	"	"	"	"	"	
		88	"	"	"	"	"	"	"	"	"	
I_{IH1} 10/	3010	89	15.0 V	15.0 V	15.0 V	15.0 V	15.0 V	15.0 V	15.0 V	"	15.0 V	
I_{IH2}		90	15.0 V	GND	GND	GND	GND	GND	GND	"	GND	
		91	GND	15.0 V	GND	"	"	"	"	"	"	
		92	"	GND	15.0 V	"	"	"	"	"	"	
		93	"	"	GND	15.0 V	"	"	"	"	"	
		94	"	"	"	GND	15.0 V	"	"	"	"	
		95	"	"	"	"	GND	15.0 V	"	"	"	
		96	"	"	"	"	"	GND	15.0 V	"	"	
		97	"	"	"	"	"	"	GND	"	15.0 V	
		98	"	"	"	"	"	"	"	"	GND	
		99	"	"	"	"	"	"	"	"	"	
I_{IL1} 10/	3009	100	"	"	"	"	"	"	"	"	"	
I_{IL2}		101	"	15.0 V	15.0 V	15.0 V	15.0 V	15.0 V	15.0 V	"	15.0 V	
		102	15.0 V	GND	15.0 V	"	"	"	"	"	"	
		103	"	15.0 V	GND	"	"	"	"	"	"	
		104	"	"	15.0 V	GND	"	"	"	"	"	
		105	"	"	"	15.0 V	GND	"	"	"	"	
		106	"	"	"	"	15.0 V	GND	"	"	"	
		107	"	"	"	"	"	15.0 V	GND	"	"	
		108	"	"	"	"	"	"	15.0 V	"	GND	
		109	"	"	"	"	"	"	"	"	15.0 V	
		110	"	"	"	"	"	"	"	"	15.0 V	

See footnotes at end of device type 02.

TABLE III. Group A inspection for device type 02 - Continued.

Symbol	MIL-STD-883 method	Cases E, F, Z Symbol	Terminal conditions 1/ D2	D3	D4	Kb	A4	V_{DD}	Measured terminal	Test limits Subgroup 1 T_C = +25°C Min	Max	Subgroup 2 T_C = +125°C Min	Max	Subgroup 3 T_C = -55°C Min	Max	Unit
		Test no.	11	12	13	14	15	16								
V_{OL1}	3007	57			I_{OL1} 7/	V_{IL1}	5.5 V	5.5 V	D4		0.4		0.5		0.4	V
		58		I_{OL1}		"	"	"	D3		"		"		"	"
		59	I_{OL1}			"	"	"	D2		"		"		"	"
		60				"	"	"	D1		"		"		"	"
		61			I_{OL1}	5.5 V	V_{IL1}	"	D4		"		"		"	"
		62		I_{OL1}		"	"	"	D3		"		"		"	"
		63	I_{OL1}			"	"	"	D2		"		"		"	"
		64				"	"	"	D1		"		"		"	"
V_{OL2}		65			I_{OL2} 8/	V_{IL1}	5.0 V	5.0 V	D4		0.5		"		0.5	"
		66		I_{OL2}		"	"	"	D3		"		"		"	"
		67	I_{OL2}			"	"	"	D2		"		"		"	"
		68				"	"	"	D1		"		"		"	"
		69			I_{OL2}	5.0 V	V_{IL1}	"	D4		"		"		"	"
		70		I_{OL2}		"	"	"	D3		"		"		"	"
		71	I_{OL2}			"	"	"	D2		"		"		"	"
		72				"	"	"	D1		"		"		"	"
V_{OL3}		73				V_{IL1}	5.0 V	"	D4		50		50		50	mV dc
		74				"	"	"	D3		"		"		"	"
		75				"	"	"	D2		"		"		"	"
		76				"	"	"	D1		"		"		"	"
		77				5.0 V	V_{IL1}	"	D4		"		"		"	"
		78				"	"	"	D3		"		"		"	"
		79				"	"	"	D2		"		"		"	"
		80				"	"	"	D1		"		"		"	"
V_{OL4}		81				V_{IL2}	12.5 V	12.5 V	D4		1.25		1.25		1.25	V
		82				"	"	"	D3		"		"		"	"
		83				"	"	"	D2		"		"		"	"
		84				"	"	"	D1		"		"		"	"
		85				12.5 V	V_{IL2}	"	D4		"		"		"	"
		86				"	"	"	D3		"		"		"	"
		87				"	"	"	D2		"		"		"	"
		88				"	"	"	D1		"		"		"	"
I_{IH1} 10/	3010	89				15.0 V	15.0 V	15.0 V	All inputs together		10					nA
I_{IH2}		90				GND	GND	"	B4		1.0		45			"
		91				"	"	"	A3		"		"			"
		92				"	"	"	B3		"		"			"
		93				"	"	"	A2		"		"			"
		94				"	"	"	B2		"		"			"
		95				"	"	"	A1		"		"			"
		96				"	"	"	B1		"		"			"
		97				"	"	"	Ka		"		"			"
		98				15.0 V	"	"	Kb		"		"			"
		99				GND	15.0 V	"	A4		"		"			"
I_{IL1} 10/	3009	100				GND	GND	"	All inputs together		-10					"
I_{IL2}		101				15.0 V	15.0 V	"	B4		-1.0		-45			"
		102				"	"	"	A3		"		"			"
		103				"	"	"	B3		"		"			"
		104				"	"	"	A2		"		"			"
		105				"	"	"	B2		"		"			"
		106				"	"	"	A1		"		"			"
		107				"	"	"	B1		"		"			"
		108				"	"	"	Ka		"		"			"
		109				GND	"	"	Kb		"		"			"
		110				15.0 V	GND	"	A4		"		"			"

TABLE III. Group A inspection for device type 02 - Continued.

Symbol	MIL-STD-883 method	Cases E, F, Z Symbol	Terminal conditions B4	A3	B3	A2	B2	A1	B1	V_{SS}	Ka	D1
		Test no.	1	2	3	4	5	6	7	8	9	10
C_I	3012	111	11/							GND		
		112		11/						"		
		113			11/					"		
		114				11/				"		
		115					11/			"		
		116						11/		"		
		117							11/	"		
		118								"		
		119								"	11/	
		120								"		
t_{PHL}	3003 (Fig. 6)	121	IN	GND	GND	GND	GND	GND	GND	GND	5.0 V	
		122	GND	"	IN	"	GND	"	"	"	"	
		123	"	"	GND	"	IN	"	"	"	"	
		124	"	"	"	"	GND	"	IN	"	"	OUT
		125	"	"	"	"	"	"	GND	"	"	
		126	"	IN	"	"	"	"	"	"	"	
		127	"	GND	"	IN	"	"	"	"	"	
		128	"	"	"	GND	"	IN	"	"	"	OUT
		129	"	"	"	"	"	GND	"	"	IN	
		130	"	5.0 V	"	"	"	"	"	"	"	
		131	"	GND	"	5.0 V	"	"	"	"	"	
		132	"	"	"	GND	"	5.0 V	"	"	"	OUT
		133	5.0 V	"	"	"	"	GND	"	"	5.0 V	
		134	GND	"	5.0 V	"	"	"	"	"	"	
		135	"	"	GND	"	5.0 V	"	"	"	"	
		136	"	"	"	"	GND	"	5.0 V	"	"	OUT
t_{PLH}		137	IN	"	"	"	"	"	GND	"	"	
		138	GND	"	IN	"	"	"	"	"	"	
		139	"	"	GND	"	IN	"	"	"	"	
		140	"	"	"	"	GND	"	IN	"	"	OUT
		141	"	"	"	"	"	"	GND	"	"	
		142	"	IN	"	"	"	"	"	"	"	
		143	"	GND	"	IN	"	"	"	"	"	
		144	"	"	"	GND	"	IN	"	"	"	OUT
		145	"	"	"	"	"	GND	"	"	IN	
		146	"	5.0 V	"	"	"	"	"	"	"	
		147	"	GND	"	5.0 V	"	"	"	"	"	
		148	"	"	"	GND	"	5.0 V	"	"	"	OUT
		149	5.0 V	"	"	"	"	GND	"	"	5.0 V	
		150	GND	"	5.0 V	"	"	"	"	"	"	
		151	"	"	GND	"	5.0 V	"	"	"	"	
		152	"	"	"	"	GND	"	5.0 V	"	"	OUT
t_{THL}	3004 (Fig.6)	153	IN	"	"	"	"	"	GND	"	"	
		154	GND	"	IN	"	"	"	"	"	"	
		155	"	"	GND	"	IN	"	"	"	"	
		156	"	"	"	"	GND	"	IN	"	"	OUT
		157	"	"	"	"	"	"	GND	"	"	
		158	"	IN	"	"	"	"	"	"	"	
		159	"	GND	"	IN	"	"	"	"	"	
		160	"	"	"	GND	"	IN	"	"	"	OUT
		161	"	"	"	"	"	GND	"	"	IN	
		162	"	5.0 V	"	"	"	"	"	"	"	
		163	"	GND	"	5.0 V	"	"	"	"	"	
		164	"	"	"	GND	"	5.0 V	"	"	"	OUT
		165	5.0 V	"	"	"	"	GND	"	"	5.0 V	
		166	GND	"	5.0 V	"	"	"	"	"	"	
		167	"	"	GND	"	5.0 V	"	"	"	"	
		168	"	"	GND	"	GND	"	5.0 V	"	"	OUT

See footnotes at end of device type 02.

TABLE III. Group A inspection for device type 02 - Continued.

Symbol	MIL-STD-883 method	Cases E, F, Z Symbol	Terminal conditions 1/ D2	D3	D4	Kb	A4	V_{DC}	Measured terminal	Test limits Subgroup 4 T_C = +25°C Min	Max					Unit
		Test no.	11	12	13	14	15	16								
C_I	3012	111						GND	B4		12					pF
		112						"	A3		"					"
		113						"	B3		"					"
		114						"	A2		"					"
		115						"	B2		"					"
		116						"	A1		"					"
		117						"	B1		"					"
		118					11/	"	A4		"					"
		119						"	Ka		"					"
		120				11/		"	Kb		"					"
										Subgroup 9 T_C = +25°C Min	Max	Subgroup 10 T_C = +125°C Min	Max	Subgroup 11 T_C = -55°C Min	Max	
t_{PHL}	3003 (Fig.6)	121			OUT	5.0 V	GND	5.0 V	D4	13	350	18	525	13	350	ns
		122		OUT		"	"	"	D3	"	"	"	"	"	"	"
		123	OUT			"	"	"	D2	"	"	"	"	"	"	"
		124				"	"	"	D1	"	"	"	"	"	"	"
		125			OUT	"	IN	"	D4	"	"	"	"	"	"	"
		126		OUT		"	GND	"	D3	"	"	"	"	"	"	"
		127	OUT			"	"	"	D2	"	"	"	"	"	"	"
		128				"	"	"	D1	"	"	"	"	"	"	"
		129			OUT	"	5.0 V	"	D4	"	"	"	"	"	"	"
		130		OUT		"	GND	"	D3	"	"	"	"	"	"	"
		131	OUT			"	"	"	D2	"	"	"	"	"	"	"
		132				"	"	"	D1	"	"	"	"	"	"	"
		133			OUT	IN	"	"	D4	"	"	"	"	"	"	"
		134		OUT		"	"	"	D3	"	"	"	"	"	"	"
		135	OUT			"	"	"	D2	"	"	"	"	"	"	"
		136				"	"	"	D1	"	"	"	"	"	"	"
t_{PLH}		137			OUT	5.0 V	"	"	D4	"	"	"	"	"	"	"
		138		OUT		"	"	"	D3	"	"	"	"	"	"	"
		139	OUT			"	"	"	D2	"	"	"	"	"	"	"
		140				"	"	"	D1	"	"	"	"	"	"	"
		141			OUT	"	IN	"	D4	"	"	"	"	"	"	"
		142		OUT		"	GND	"	D3	"	"	"	"	"	"	"
		143	OUT			"	"	"	D2	"	"	"	"	"	"	"
		144				"	"	"	D1	"	"	"	"	"	"	"
		145			OUT	"	5.0 V	"	D4	"	"	"	"	"	"	"
		146		OUT		"	GND	"	D3	"	"	"	"	"	"	"
		147	OUT			"	"	"	D2	"	"	"	"	"	"	"
		148				"	"	"	D1	"	"	"	"	"	"	"
		149			OUT	IN	"	"	D4	"	"	"	"	"	"	"
		150		OUT		"	"	"	D3	"	"	"	"	"	"	"
		151	OUT			"	"	"	D2	"	"	"	"	"	"	"
		152				"	"	"	D1	"	"	"	"	"	"	"
t_{THL}	3004 (Fig.6)	153			OUT	5.0 V	"	"	D4	10	"	14	"	10	"	"
		154		OUT		"	"	"	D3	"	"	"	"	"	"	"
		155	OUT			"	"	"	D2	"	"	"	"	"	"	"
		156				"	"	"	D1	"	"	"	"	"	"	"
		157			OUT	"	IN	"	D4	"	"	"	"	"	"	"
		158		OUT		"	GND	"	D3	"	"	"	"	"	"	"
		159	OUT			"	"	"	D2	"	"	"	"	"	"	"
		160				"	"	"	D1	"	"	"	"	"	"	"
		161			OUT	"	5.0 V	"	D4	"	"	"	"	"	"	"
		162		OUT		"	GND	"	D3	"	"	"	"	"	"	"
		163	OUT			"	"	"	D2	"	"	"	"	"	"	"
		164				"	"	"	D1	"	"	"	"	"	"	"
		165			OUT	IN	"	"	D4	"	"	"	"	"	"	"
		166		OUT		"	"	"	D3	"	"	"	"	"	"	"
		167	OUT			"	"	"	D2	"	"	"	"	"	"	"
		168				"	"	"	D1	"	"	"	"	"	"	"

TABLE III. Group A inspection for device type 02 - Continued.

Symbol	MIL-STD-883 method	Cases E, F, Z	Terminal conditions									
		Symbol	B4	A3	B3	A2	B2	A1	B1	V_{SS}	Ka	D1
		Test no.	1	2	3	4	5	6	7	8	9	10
t_{TLH}	3004 (Fig.5)	169	IN	GND	GND	GND	GND	GND	GND	GND	5.0 V	
		170	GND	"	IN	"	GND	"	"	"	"	
		171	"	"	GND	"	IN	"	"	"	"	
		172	"	"	"	"	GND	"	IN	"	"	OUT
		173	"	"	"	"	"	"	GND	"	"	
		174	"	IN	"	"	"	"	"	"	"	
		175	"	GND	"	IN	"	"	"	"	"	
		176	"	"	"	GND	"	IN	"	"	"	OUT
		177	"	"	"	"	"	GND	"	"	IN	
		178	"	5.0 V	"	"	"	"	"	"	"	
		179	"	GND	"	5.0 V	"	"	"	"	"	
		180	"	"	"	GND	"	5.0 V	"	"	"	OUT
		181	5.0 V	"	"	"	"	GND	"	"	5.0 V	
		182	GND	"	5.0 V	"	"	"	"	"	"	
		183	"	"	GND	"	5.0 V	"	"	"	"	
		184	"	"	GND	"	GND	"	5.0 V	"	"	OUT

1/ Pins not designated may be "high" level logic, "low" level logic, or open. Exceptions are as follows: For $V_{IC(POS)}$ tests, the V_{SS} terminal shall be open; for $V_{IC(NEG)}$ tests, the V_{DD} terminal shall be open; for I_{SS} tests, the outputs shall be open.

2/ V_{IH1} = 3.8 V at +25°C; 3.5 V at +125°C; 3.95 V at -55°C.

3/ I_{IH1} = -0.1 mA at +25°C; -0.1 mA at +125°C; -0.1 mA at -55°C.

4/ I_{IH2} = -0.25 mA at +25°C; -0.175 mA at +125°C; -0.31 mA at -55°C.

5/ V_{IH2} = 9.5 V at +25°C; 9.25 V at +125°C; 9.75 V at -55°C.

6/ V_{IL1} = 1.1 V at +25°C; 0.85 V at +125°C; 1.35 V at -55°C.

7/ I_{IL1} = 0.23 mA at +25°C; 0.23 mA at +125°C; 0.23 mA at -55°C.

8/ I_{IL2} = 0.5 mA at +25°C; 0.4 mA at +125°C; 0.55 mA at -55°C.

9/ V_{IL2} = 2.8 V at +25°C; 2.55 V at +125°C; 3.05 V at -55°C.

10/ The device manufacturer may, at his option, measure I_{IL} and I_{IH} at +25°C for each individual input or measure all inputs together.

11/ See 4.4.1c.

TABLE III. Group A inspection for device type 02 - Continued.

Symbol	MIL-STD-883 method	Cases E, F, Z Symbol	Terminal conditions 1/ D2	D3	D4	Kb	A4	V_{DD}	Measured terminal	Test limits Subgroup 9 T_C = +25°C Min	Max	Subgroup 10 T_C = +125°C Min	Max	Subgroup 11 T_C = -55°C Min	Max	Unit
		Test no.	11	12	13	14	15	16								
t_{TLH}	3004 (Fig.6)	169			OUT	5.0 V	GND	5.0 V	D4	10	150	14	525	10	350	ns
		170		OUT		"	"	"	D3	"	"	"	"	"	"	"
		171	OUT			"	"	"	D2	"	"	"	"	"	"	"
		172				"	"	"	D1	"	"	"	"	"	"	"
		173			OUT	"	IN	"	D4	"	"	"	"	"	"	"
		174		OUT		"	GND	"	D3	"	"	"	"	"	"	"
		175	OUT			"	"	"	D2	"	"	"	"	"	"	"
		176				"	"	"	D1	"	"	"	"	"	"	"
		177			OUT	"	5.0 V	"	D4	"	"	"	"	"	"	"
		178		OUT		"	GND	"	D3	"	"	"	"	"	"	"
		179	OUT			"	"	"	D2	"	"	"	"	"	"	"
		180				"	"	"	D1	"	"	"	"	"	"	"
		181			OUT	IN	"	"	D4	"	"	"	"	"	"	"
		182		OUT		"	"	"	D3	"	"	"	"	"	"	"
		183	OUT			"	"	"	D2	"	"	"	"	"	"	"
		184				"	"	"	D1	"	"	"	"	"	"	"

TABLE III. Group A inspection for device type 03.

Symbol	MIL-STD-883 method	Cases C,D,X,Y Symbol	Terminal conditions 1A	1B	1Y	2Y	2A	2B	V_{SS}	3A	3B	3Y	4Y
		Test no.	1	2	3	4	5	6	7	8	9	10	11
$V_{IC(POS)}$		1	1 mA										
		2		1 mA									
		3					1 mA						
		4						1 mA					
		5								1 mA			
		6									1 mA		
		7											
		8											
$V_{IC(NEG)}$		9	-1 mA						GND				
		10		-1 mA					"				
		11					-1 mA		"				
		12						-1 mA	"				
		13							"	-1 mA			
		14							"		-1 mA		
		15							"				
		16							"				
I_{SS} 2/	3005	17	15.0 V	GND			GND	15.0 V	"	15.0 V	GND		
		18	GND	15.0 V			15.0 V	GND	"	GND	15.0 V		
		19	GND	GND			GND	GND	"	GND	GND		
V_{OH1}	3006	20	V_{IL1} 3/	4.5 V	I_{OH1} 4/		4.5 V	4.5 V	"	4.5 V	4.5 V		
		21	4.5 V	"		I_{OH1}	V_{IL1}	"	"	4.5 V	"		
		22	"	"			4.5 V	"	"	V_{IL1}	"	I_{OH1}	
		23	"	"			4.5 V	"	"	4.5 V	"		I_{OH1} DM
V_{OH2}		24	V_{IL1}	5.0 V	I_{OH2} 5/		5.0 V	5.0 V	"	5.0 V	5.0 V		
		25	5.0 V	"		I_{OH2}	V_{IL1}	"	"	5.0 V	"		
		26	"	"			5.0 V	"	"	V_{IL1}	"	I_{OH2}	~~I_{OH1}~~
		27	"	"			"	"	"	5.0 V	"		I_{OH2} DM
V_{OH3}		28	V_{IL1}	"			"	"	"	5.0 V	"		
		29	5.0 V	"			V_{IL1}	"	"	5.0 V	"		
		30	"	"			5.0 V	"	"	V_{IL1}	"	~~I_{OH2}~~	~~I_{OH2}~~
		31	"	"			5.0 V	"	"	5.0 V	"		
V_{OH4}		32	V_{IL2} 6/	12.5 V			12.5 V	12.5 V	"	12.5 V	12.5 V		
		33	12.5 V	"			V_{IL2}	"	"	12.5 V	"		
		34	"	"			12.5 V	"	"	V_{IL2}	"		
		35	"	"			12.5 V	"	"	12.5 V	"		
V_{OL1}	3007	36	V_{IH1} 7/	V_{IH1}	I_{OL1} 8/		GND	GND	"	GND	GND		
		37	GND	GND	I_{OL1}		GND	GND	"	"	"		
		38	"	"		I_{OL1}	V_{IH1}	V_{IH1}	"	"	"		
		39	"	"			GND	GND	"	"	"		
		40	"	"			"	"	"	V_{IH1}	V_{IH1}	I_{OL1}	
		41	"	"			"	"	"	GND	GND	I_{OL1}	
		42	"	"			"	"	"	"	"		I_{OL1}
		43	"	"			"	"	"	"	"		I_{OL1}
V_{OL2}		44	V_{IH1}	V_{IH1}	I_{OL2} 9/		"	"	"	"	"		
		45	GND	GND	I_{OL2}		"	"	"	"	"		
		46	"	"		I_{OL2}	V_{IH1}	V_{IH1}	"	"	"		
		47	"	"			GND	GND	"	"	"		
		48	"	"			"	"	"	V_{IH1}	V_{IH1}	I_{OL2}	
		49	"	"			"	"	"	GND	GND	I_{OL2}	
		50	"	"			"	"	"	"	"		I_{OL2}
		51	"	"			"	"	"	"	"		I_{OL2}

See footnotes at end of device type 03.

TABLE III. Group A inspection for device type 03 - Continued.

Symbol	MIL-STD-883 method	Cases A, C, D, X, Y Symbol	Terminal conditions 1/ 4A	4B	V_{DD}	Measured terminal	Test limits Subgroup 1 T_C = +25°C Min	Max	Subgroup 2 T_C = +125°C Min	Max	Subgroup 3 T_C = -55°C Min	Max	Unit
		Test no.	12	13	14								
$V_{IC(POS)}$		1			GND	1A		1.5					V
		2			"	1B		"					"
		3			"	2A		"					"
		4			"	2B		"					"
		5			"	3A		"					"
		6			"	3B		"					"
		7	1 mA		"	4A		"					"
		8		1 mA	"	4B		"					"
$V_{IC(NEG)}$		9				1A		-6					"
		10				1B		"					"
		11				2A		"					"
		12				2B		"					"
		13				3A		"					"
		14				3B		"					"
		15	-1 mA			4A		"					"
		16		-1 mA		4B		"					"
I_{SS} 2/	3005	17	GND	15.0 V	15.0 V	V_{SS}		-25		-750			nA
		18	15.0 V	GND	"	"		"		"			"
		19	GND	GND	"	"		"		"			"
V_{OH1}	3006	20	4.5 V	4.5 V	4.5 V	1Y	2.5		2.5		2.5		V
		21	"	"	"	2Y	"		"		"		"
		22	"	"	"	3Y	"		"		"		"
		23	V_{IL1}	"	"	4Y	"		"		"		"
V_{OH2}		24	5.0 V	5.0 V	5.0 V	1Y	4.5		4.5		4.5		"
		25	"	"	"	2Y	"		"		"		"
		26	"	"	"	3Y	"		"		"		"
		27	V_{IL1}	"	"	4Y	"		"		"		"
V_{OH3}		28	5.0 V	"	"	1Y	4.95		4.95		4.95		"
		29	"	"	"	2Y	"		"		"		"
		30	"	"	"	3Y	"		"		"		"
		31	V_{IL1}	"	"	4Y	"		"		"		"
V_{OH4}		32	12.5 V	12.5 V	12.5 V	1Y	11.25		11.25		11.25		"
		33	"	"	"	2Y	"		"		"		"
		34	"	"	"	3Y	"		"		"		"
		35	V_{IL2}	"	"	4Y	"		"		"		"
V_{OL1}	3007	36	GND	GND	5.5 V	1Y		0.4		0.5		0.4	"
		37	"	"	"	1Y		"		"		"	"
		38	"	"	"	2Y		"		"		"	"
		39	"	"	"	2Y		"		"		"	"
		40	"	"	"	3Y		"		"		"	"
		41	"	"	"	3Y		"		"		"	"
		42	V_{IH1}	V_{IH1}	"	4Y		"		"		"	"
		43	GND	GND	"	4Y		"		"		"	"
V_{OL2}		44	"	"	5.0 V	1Y		0.5		"		0.5	"
		45	"	"	"	1Y		"		"		"	"
		46	"	"	"	2Y		"		"		"	"
		47	"	"	"	2Y		"		"		"	"
		48	"	"	"	3Y		"		"		"	"
		49	"	"	"	3Y		"		"		"	"
		50	V_{IH1}	V_{IH1}	"	4Y		"		"		"	"
		51	GND	GND	"	4Y		"		"		"	"

TABLE III. Group A inspection for device type 03 - Continued.

Symbol	MIL-STD-883 method	Cases C,D,X,Y Symbol	Terminal conditions 1A	1B	1Y	2Y	2A	2B	V_{SS}	3A	3B	3Y	4Y
		Test no.	1	2	3	4	5	6	7	8	9	10	11
V_{OL3}	3007	52	V_{IH1}	V_{IH1}			GND	GND	GND	GND	GND		
		53	GND	GND			GND	GND	"	"	"		
		54	"	"			V_{IH1}	V_{IH1}	"	"	"		
		55	"	"			GND	GND	"	"	"		
		56	"	"			"	"	"				
		57	"	"			"	"	"	V_{IH1}	V_{IH1}		
		58	"	"			"	"	"	GND	GND		
		59	"	"			"	"	"	"	"		
V_{OL4}		60	V_{IH2} 10/	V_{IH2}			"	"	"	"	"		
		61	GND	GND			"	"	"	"	"		
		62	"	"			V_{IH2}	V_{IH2}	"	"	"		
		63	"	"			GND	GND	"	"	"		
		64	"	"			"	"	"				
		65	"	"			"	"	"	V_{IH2}	V_{IH2}		
		66	"	"			"	"	"	GND	GND		
		67	"	"			"	"	"	"	"		
V_{OL5}		68	V_{IH1}	V_{IH1}	I_{OL3} 11/		"	"	"	"	"		
		69	GND	GND	I_{OL3}		"	"	"	"	"		
		70	"	"		I_{OL3}	V_{IH1}	V_{IH1}	"	"	"		
		71	"	"			GND	GND	"	"	"		
		72	"	"			"	"	"				
		73	"	"			"	"	"	V_{IH1}	V_{IH1}	I_{OL3}	
		74	"	"			"	"	"	GND	GND	I_{OL3}	
		75	"	"			"	"	"	"	"		I_{OL3}
I_{IH1} 12/	3010	76	15.0 V	15.0 V			15.0 V	15.0 V	"	15.0 V	15.0 V		
I_{IH2}		77	15.0 V	GND			GND	GND	"	GND	GND		
		78	GND	15.0 V			GND	"	"	"	"		
		79	"	GND			15.0 V	"	"	"	"		
		80	"	"			GND	15.0 V	"	"	"		
		81	"	"			"	GND	"	15.0 V	"		
		82	"	"			"	"	"	GND	15.0 V		
		83	"	"			"	"	"	"	GND		
		84	"	"			"	"	"	"	"		
I_{IL1} 12/	3009	85	"	"			"	"	"	"	"		
I_{IL2}		86	"	"			"	"	"	"	"		
		87	"	"			"	"	"	"	"		
		88	"	"			"	"	"	"	"		
		89	"	"			"	"	"	"	"		
		90	"	"			"	"	"	"	"		
		91	"	"			"	"	"	"	"		
		92	"	"			"	"	"	"	"		
		93	"	"			"	"	"	"	"		
C_I	3012	94	13/						GND				
		95		13/					"				
		96					13/		"				
		97						13/	"				
		98							"	13/			
		99							"		13/		
		100							"				
		101							"				

See footnotes at end of device type 03.

TABLE III. Group A inspection for device type 03 - Continued.

Symbol	MIL-STD-883 method	Cases A, C,D,X,Y Symbol	Terminal conditions 1/ 4A	4B	V_{DD}	Measured terminal	Test limits Subgroup 1 T_C = +25°C Min	Max	Subgroup 2 T_C = +125°C Min	Max	Subgroup 3 T_C = -55°C Min	Max	Unit
		Test no.	12	13	14								
V_{OL3}	3007	52	GND	GND	5.0 V	1Y		50		50		50	mV dc
		53	"	"	"	1Y		"		"		"	"
		54	"	"	"	2Y		"		"		"	"
		55	"	"	"	2Y		"		"		"	"
		56	"	"	"	3Y		"		"		"	"
		57	"	"	"	3Y		"		"		"	"
		58	V_{IH1}	V_{IH1}	"	4Y		"		"		"	"
		59	GND	GND	"	4Y		"		"		"	"
V_{OL4}		60	"	"	12.5 V	1Y		1.25		1.25		1.25	V
		61	"	"	"	1Y		"		"		"	"
		62	"	"	"	2Y		"		"		"	"
		63	"	"	"	2Y		"		"		"	"
		64	"	"	"	3Y		"		"		"	"
		65	"	"	"	3Y		"		"		"	"
		66	V_{IH2}	V_{IH2}	"	4Y		"		"		"	"
		67	GND	GND	"	4Y		"		"		"	"
V_{OL5}		68	"	"	5.0 V	1Y		0.5		0.5		0.5	"
		69	"	"	"	1Y		"		"		"	"
		70	"	"	"	2Y		"		"		"	"
		71	"	"	"	2Y		"		"		"	"
		72	"	"	"	3Y		"		"		"	"
		73	"	"	"	3Y		"		"		"	"
		74	V_{IH1}	V_{IH1}	"	4Y		"		"		"	"
		75	GND	GND	"	4Y		"		"		"	"
I_{IH1} 12/	3010	76	15.0 V	15.0 V	15.0 V	All inputs together		8.0					nA
I_{IH2}		77	GND	GND	"	1A		1.0		45			"
		78	"	"	"	1B		"		"			"
		79	"	"	"	2A		"		"			"
		80	"	"	"	2B		"		"			"
		81	"	"	"	3A		"		"			"
		82	"	"	"	3B		"		"			"
		83	15.0 V	"	"	4A		"		"			"
		84	GND	15.0 V	"	4B		"		"			"
I_{IL1} 12/	3009	85	"	GND	"	All inputs together		-8.0					"
I_{IL2}		86	"	"	"	1A		-1.0		-45			"
		87	"	"	"	1B		"		"			"
		88	"	"	"	2A		"		"			"
		89	"	"	"	2B		"		"			"
		90	"	"	"	3A		"		"			"
		91	"	"	"	3B		"		"			"
		92	"	"	"	4A		"		"			"
		93	"	"	"	4B		"		"			"
							Subgroup 4 T_C = +25°C Min	Max					
C_I	3012	94			GND	1A		12					pF
		95			"	1B		"					"
		96			"	2A		"					"
		97			"	2B		"					"
		98			"	3A		"					"
		99			"	3B		"					"
		100	13/		"	4A		"					"
		101		13/	"	4B		"					"

TABLE III. Group A inspection for device type 03 - Continued.

Symbol	MIL-STD-883 method	Cases C,D,X,Y Symbol	Terminal conditions 1A	1B	1Y	2Y	2A	2B	V_{SS}	3A	3B	3Y	4Y
		Test no.	1	2	3	4	5	6	7	8	9	10	11
t_{PHL}	3003 (Fig.5)	102	IN	GND	OUT		GND	GND	GND	GND	GND		
		103	GND	IN	OUT		GND	"	"	"	"		
		104	"	GND		OUT	IN	"	"	"	"		
		105	"	"		OUT	GND	IN	"	"	"		
		106	"	"			"	GND	"	IN	"	OUT	
		107	"	"			"	"	"	GND	IN	OUT	
		108	"	"			"	"	"	"	GND		OUT
		109	"	"			"	"	"	"	"		OUT
t_{PLH}		110	IN	"	OUT		"	"	"	"	"		
		111	GND	IN	OUT		"	"	"	"	"		
		112	"	GND		OUT	IN	"	"	"	"		
		113	"	"		OUT	GND	IN	"	"	"		
		114	"	"			"	GND	"	IN	"	OUT	
		115	"	"			"	"	"	GND	IN	OUT	
		116	"	"			"	"	"	"	GND		OUT
		117	"	"			"	"	"	"	"		OUT
t_{THL}	3004 (Fig.5)	118	IN	"	OUT		"	"	"	"	"		
		119	GND	IN	OUT		"	"	"	"	"		
		120	"	GND		OUT	IN	"	"	"	"		
		121	"	"		OUT	GND	IN	"	"	"		
		122	"	"			"	GND	"	IN	"	OUT	
		123	"	"			"	"	"	GND	IN	OUT	
		124	"	"			"	"	"	"	GND		OUT
		125	"	"			"	"	"	"	"		OUT
t_{TLH}		126	IN	"	OUT		"	"	"	"	"		
		127	GND	IN	OUT		"	"	"	"	"		
		128	"	GND		OUT	IN	"	"	"	"		
		129	"	"		OUT	GND	IN	"	"	"		
		130	"	"			"	GND	"	IN	"	OUT	
		131	"	"			"	"	"	GND	IN	OUT	
		132	"	"			"	"	"	"	GND		OUT
		133	"	"			"	"	"	"	GND		OUT

1/ Pins not designated may be "high" level logic, "low" level logic, or open. Exceptions are as follows: For $V_{IC(POS)}$ tests, the V_{SS} terminal shall be open; for $V_{IC(NEG)}$ tests, the V_{DD} terminal shall be open; for I_{SS} tests, the outputs shall be open.

2/ I_{SS} measurements shall be performed in sequence.

3/ V_{IL1} = 1.1 V at +25°C; 0.85 V at +125°C; 1.35 V at -55°C.

4/ I_{OH1} = -0.1 mA at +25°C; -0.1 mA at +125°C; -0.1 mA at -55°C.

5/ I_{OH2} = -0.2 mA at +25°C; -0.13 mA at +125°C; -0.25 mA at -55°C.

6/ V_{IL2} = 2.8 V at +25°C; 2.55 V at +125°C; 3.05 V at -55°C.

7/ V_{IH1} = 3.8 V at +25°C; 3.5 V at +125°C; 3.95 V at -55°C.

8/ I_{OL1} = 0.23 mA at +25°C; 0.23 mA at +125°C; 0.23 mA at -55°C.

9/ I_{OL2} = 0.40 mA at +25°C; 0.28 mA at +125°C; 0.5 mA at -55°C.

10/ V_{IH2} = 9.5 V at +25°C; 9.25 V at +125°C; 9.75 V at -55°C.

11/ I_{OL3} = 0.60 mA at +25°C, 0.56 mA at +125°C; 1.0 mA at -55°C.

12/ The device manufacturer may, at his option, measure I_{IL} and I_{IH} at +25°C for each individual input or measure all inputs together.

13/ See 4.4.1c.

TABLE III. Group A inspection for device type 03 - Continued.

Symbol	MIL-STD-883 method	Cases A, C,D,X,Y Symbol	Terminal conditions 1/ 4A	4B	V_{DD}	Measured terminal	Test limits Subgroup 9 T_C = +25°C Min	Max	Subgroup 10 T_C = +125°C Min	Max	Subgroup 11 T_C = -55°C Min	Max	Unit
		Test no.	12	13	14								
t_{PHL}	3003 (Fig.5)	102	GND	GND	5.0 V	1A to 1Y	10	210	14	270	10	155	ns
		103	"	"	"	1B to 1Y	"	"	"	"	"	"	"
		104	"	"	"	2A to 2Y	"	"	"	"	"	"	"
		105	"	"	"	2B to 2Y	"	"	"	"	"	"	"
		106	"	"	"	3A to 3Y	"	"	"	"	"	"	"
		107	"	"	"	3B to 3Y	"	"	"	"	"	"	"
		108	IN	"	"	4A to 4Y	"	"	"	"	"	"	"
		109	GND	IN	"	4B to 4Y	"	"	"	"	"	"	"
t_{PLH}		110	"	GND	"	1A to 1Y	"	"	"	"	"	"	"
		111	"	"	"	1B to 1Y	"	"	"	"	"	"	"
		112	"	"	"	2A to 2Y	"	"	"	"	"	"	"
		113	"	"	"	2B to 2Y	"	"	"	"	"	"	"
		114	"	"	"	3A to 3Y	"	"	"	"	"	"	"
		115	"	"	"	3B to 3Y	"	"	"	"	"	"	"
		116	IN	"	"	4A to 4Y	"	"	"	"	"	"	"
		117	GND	IN	"	4B to 4Y	"	"	"	"	"	"	"
t_{THL}	3004 (Fig.5)	118	"	GND	"	1A to 1Y	"	300	"	380	"	220	"
		119	"	"	"	1B to 1Y	"	"	"	"	"	"	"
		120	"	"	"	2A to 2Y	"	"	"	"	"	"	"
		121	"	"	"	2B to 2Y	"	"	"	"	"	"	"
		122	"	"	"	3A to 3Y	"	"	"	"	"	"	"
		123	"	"	"	3B to 3Y	"	"	"	"	"	"	"
		124	IN	"	"	4A to 4Y	"	"	"	"	"	"	"
		125	GND	IN	"	4B to 4Y	"	"	"	"	"	"	"
t_{TLH}		126	"	GND	"	1A to 1Y	"	410	"	530	"	305	"
		127	"	"	"	1B to 1Y	"	"	"	"	"	"	"
		128	"	"	"	2A to 2Y	"	"	"	"	"	"	"
		129	"	"	"	2B to 2Y	"	"	"	"	"	"	"
		130	"	"	"	3A to 3Y	"	"	"	"	"	"	"
		131	"	"	"	3B to 3Y	"	"	"	"	"	"	"
		132	IN	"	"	4A to 4Y	"	"	"	"	"	"	"
		133	GND	IN	"	4B to 4Y	"	"	"	"	"	"	"

TABLE III. Group A inspection for device type 04.

Symbol	MIL-STD-883 method	Cases E, F, Z Symbol	J	Kd	H	G	F	E	Kb	V_{SS}	Kc	Ka
			Terminal conditions									
		Test no.	1	2	3	4	5	6	7	8	9	10
$V_{IC(POS)}$ 2/		1		1 mA								
		2			1 mA							
		3				1 mA						
		4					1 mA					
		5						1 mA				
		6							1 mA			
		7									1 mA	
		8										1 mA
		9										
		10										
		11										
		12										
		13										
$V_{IC(NEG)}$ 2/		14		-1 mA						GND		
		15			-1 mA					"		
		16				-1 mA				"		
		17					-1 mA			"		
		18						-1 mA		"		
		19							-1 mA	"		
		20								"	-1 mA	
		21								"		-1 mA
		22								"		
		23								"		
		24								"		
		25								"		
		26								"		
I_{SS} 3/	3005	27		GND	GND	GND	GND	GND	GND	"	GND	GND
		28		15.0 V	GND	GND	GND	GND	15.0 V	"	15.0 V	15.0 V
		29		GND	15.0 V	15.0 V	15.0 V	15.0 V	GND	"	GND	GND
		30		15.0 V	15.0 V	15.0 V	15.0 V	15.0 V	15.0 V	"	15.0 V	15.0 V
V_{OH3}	3006	31		5.0 V	V_{IL1} 4/	V_{IL1}	V_{IL1}	V_{IL1}	GND	"	GND	GND
		32		"	V_{IL1}	V_{IL1}	V_{IL1}	V_{IL1}	"	"	5.0 V	5.0 V
V_{OH4}		33		"	V_{IL2} 5/	V_{IL2}	V_{IL2}	V_{IL2}	"	"	GND	GND
		34		"	V_{IL2}	V_{IL2}	V_{IL2}	V_{IL2}	"	"	5.0 V	5.0 V
V_{OL3}	3007	35		"	V_{IH1} 6/	V_{IH1}	V_{IH1}	V_{IH1}	"	"	GND	GND
		36		"	V_{IH1}	V_{IH1}	V_{IH1}	V_{IH1}	"	"	5.0 V	5.0 V
V_{OL4}		37		"	V_{IH2} 7/	V_{IH2}	V_{IH2}	V_{IH2}	"	"	GND	GND
		38		"	V_{IH2}	V_{IH2}	V_{IH2}	V_{IH2}	"	"	5.0 V	5.0 V
I_{IH1} 8/	3010	39		15.0 V	15.0 V	15.0 V	15.0 V	15.0 V	15.0 V		15.0 V	15.0 V
I_{IH2}		40		15.0 V	GND	GND	GND	GND	GND	GND	GND	GND
		41		GND	15.0 V	GND	"	"	"	"	"	"
		42		"	GND	15.0 V	"	"	"	"	"	"
		43		"	"	GND	15.0 V	"	"	"	"	"
		44		"	"	"	GND	15.0 V	"	"	"	"
		45		"	"	"	"	GND	15.0 V	"	"	"
		46		"	"	"	"	"	GND	"	15.0 V	"
		47		"	"	"	"	"	"	"	GND	15.0 V
		48		"	"	"	"	"	"	"	"	GND
		49		"	"	"	"	"	"	"	"	"
		50		"	"	"	"	"	"	"	"	"
		51		"	"	"	"	"	"	"	"	"
		52		"	"	"	"	"	"	"	"	"

See footnotes at end of device type 04.

TABLE III. Group A inspection for device type 04 - Continued.

Symbol	MIL-STD-883 method	Cases E, F, Z Symbol	Terminal conditions 1/ D	C	B	A	EX	V_{DD}	Measured terminal	Test limits Subgroup 1 T_C = +25°C Min	Max	Subgroup 2 T_C = +125°C Min	Max	Subgroup 3 T_C = -55°C Min	Max	Unit
		Test no.	11	12	13	14	15	16								
$V_{IC(POS)}$ 2/		1						GND	Kd		1.5					V
		2						"	H		"					"
		3						"	G		"					"
		4						"	F		"					"
		5						"	E		"					"
		6						"	Kb		"					"
		7						"	Kc		"					"
		8						"	Ka		"					"
		9	1 mA					"	D		"					"
		10		1 mA				"	C		"					"
		11			1 mA			"	B		"					"
		12				1 mA		"	A		"					"
		13					1 mA	"	EX		"					"
$V_{IC(NEG)}$ 2/		14							Kd		-6.0					"
		15							H		"					"
		16							G		"					"
		17							F		"					"
		18							E		"					"
		19							Kb		"					"
		20							Kc		"					"
		21							Ka		"					"
		22	-1 mA						D		"					"
		23		-1 mA					C		"					"
		24			-1 mA				B		"					"
		25				-1 mA			A		"					"
		26					-1 mA		EX		"					"
I_{SS} 3/	3005	27	GND	GND	GND	GND	GND	15.0 V	V_{SS}		-1.9		-3			μA
		28	GND	GND	GND	GND	GND	"	"		"		"			"
		29	15.0 V	15.0 V	15.0 V	15.0 V	15.0 V	"	"		"		"			"
		30	15.0 V	15.0 V	15.0 V	15.0 V	15.0 V	"	"		"		"			"
V_{OH3}	3006	31	V_{IL1}	V_{IL1}	V_{IL1}	V_{IL1}	GND	5.0 V	J	4.95		4.95		4.95		V
		32	V_{IL1}	V_{IL1}	V_{IL1}	V_{IL1}	"	5.0 V	"	4.95		4.95		4.95		"
V_{OH4}		33	V_{IL2}	V_{IL2}	V_{IL2}	V_{IL2}	"	12.5 V	"	11.25		11.25		11.25		"
		34	V_{IL2}	V_{IL2}	V_{IL2}	V_{IL2}	"	12.5 V	"	11.25		11.25		11.25		"
V_{OL3}	3007	35	V_{IH1}	V_{IH1}	V_{IH1}	V_{IH1}	"	5.0 V	"		0.05		0.05		0.05	"
		36	V_{IH1}	V_{IH1}	V_{IH1}	V_{IH1}	"	5.0 V	"		0.05		0.05		0.05	"
V_{OL4}		37	V_{IH2}	V_{IH2}	V_{IH2}	V_{IH2}	"	12.5 V	"		1.25		1.25		1.25	"
		38	V_{IH2}	V_{IH2}	V_{IH2}	V_{IH2}	"	12.5 V	"		1.25		1.25		1.25	"
I_{IH1} 8/	3010	39	15.0 V	15.0 V	15.0 V	15.0 V	15.0 V	15.0 V	All inputs together		13					nA
I_{IH2}		40	GND	GND	GND	GND	GND	"	Kd		1.0		45			"
		41	"	"	"	"	"	"	H		"		"			"
		42	"	"	"	"	"	"	G		"		"			"
		43	"	"	"	"	"	"	F		"		"			"
		44	"	"	"	"	"	"	E		"		"			"
		45	"	"	"	"	"	"	Kb		"		"			"
		46	"	"	"	"	"	"	Kc		"		"			"
		47	"	"	"	"	"	"	Ka		"		"			"
		48	15.0 V	"	"	"	"	"	D		"		"			"
		49	GND	15.0 V	"	"	"	"	C		"		"			"
		50	"	GND	15.0 V	"	"	"	B		"		"			"
		51	"	"	GND	15.0 V	"	"	A		"		"			"
		52	"	"	GND	GND	15.0 V	"	EX		"		"			"

TABLE III. Group A inspection for device type 04 - Continued.

Symbol	MIL-STD-883 method	Cases E, F, Z	Terminal conditions									
		Symbol	J	Kd	H	G	F	E	Kb	V_{SS}	Kc	Ka
		Test no.	1	2	3	4	5	6	7	8	9	10
I_{IL1} 8/	3009	53		GND	GND	GND	GND	GND	GND	GND	GND	GND
I_{IL2}		54		"	"	"	"	"	"	"	"	"
		55		"	"	"	"	"	"	"	"	"
		56		"	"	"	"	"	"	"	"	"
		57		"	"	"	"	"	"	"	"	"
		58		"	"	"	"	"	"	"	"	"
		59		"	"	"	"	"	"	"	"	"
		60		"	"	"	"	"	"	"	"	"
		61		"	"	"	"	"	"	"	"	"
		62		"	"	"	"	"	"	"	"	"
		63		"	"	"	"	"	"	"	"	"
		64		"	"	"	"	"	"	"	"	"
		65		"	"	"	"	"	"	"	"	"
		66		"	"	"	"	"	"	"	"	"
I_{OC1}		67	15.0 V	"	15.0 V	15.0 V	15.0 V	15.0 V	15.0 V	"	15.0 V	15.0 V
I_{OC2}		68	GND	"	15.0 V	15.0 V	15.0 V	15.0 V	15.0 V	"	15.0 V	15.0 V
C_I	3012	69		9/						GND		
		70			9/					"		
		71				9/				"		
		72					9/			"		
		73						9/		"		
		74							9/	"		
		75								"	9/	
		76								"		9/
		77								"		
		78								"		
		79								"		
		80								"		
		81								"		
t_{PHL1}	3003 (Fig.7)	82	OUT	5.0 V	GND	GND	GND	GND	GND	GND	GND	GND
		83	"	"	"	"	"	"	"	"	"	"
		84	"	"	"	"	"	"	"	"	"	"
		85	"	"	"	"	"	"	"	"	"	"
		86	"	"	"	"	"	IN	"	"	"	"
		87	"	"	"	"	IN	GND	"	"	"	"
		88	"	"	"	IN	GND	"	"	"	"	"
		89	"	"	IN	GND	"	"	"	"	"	"
t_{PLH1}		90	"	"	GND	"	"	"	"	"	"	"
		91	"	"	"	"	"	"	"	"	"	"
		92	"	"	"	"	"	"	"	"	"	"
		93	"	"	"	"	"	"	"	"	"	"
		94	"	"	"	"	"	IN	"	"	"	"
		95	"	"	"	"	IN	GND	"	"	"	"
		96	"	"	"	IN	GND	"	"	"	"	"
		97	"	"	IN	GND	GND	"	"	"	"	"

See footnotes at end of device type 04.

TABLE III. Group A inspection for device type 04 - Continued.

Symbol	MIL-STD-883 method	Cases E, F, Z Symbol	Terminal conditions 1/ D	C	B	A	EX	V_{DD}	Measured terminal	Test limits Subgroup 1 T_C = +25°C Min	Max	Subgroup 2 T_C = +125°C Min	Max	Subgroup 3 T_C = -55°C Min	Max	Unit
		Test no.	11	12	13	14	15	16								
I_{IL1} 8/	3009	53	GND	GND	GND	GND	GND	15.0 V	All inputs together		-13					nA
I_{IL2}		54	"	"	"	"	"	"	Kd		-1.0		-45			"
		55	"	"	"	"	"	"	H		"		"			"
		56	"	"	"	"	"	"	G		"		"			"
		57	"	"	"	"	"	"	F		"		"			"
		58	"	"	"	"	"	"	E		"		"			"
		59	"	"	"	"	"	"	Kb		"		"			"
		60	"	"	"	"	"	"	Kc		"		"			"
		61	"	"	"	"	"	"	Ka		"		"			"
		62	"	"	"	"	"	"	D		"		"			"
		63	"	"	"	"	"	"	C		"		"			"
		64	"	"	"	"	"	"	B		"		"			"
		65	"	"	"	"	"	"	A		"		"			"
		66	"	"	"	"	"	"	EX		"		"			"
I_{DC1}		67	15.0 V	15.0 V	15.0 V	15.0 V	"	15.0 V	J		25		90		25	"
I_{DC2}		68	15.0 V	15.0 V	15.0 V	15.0 V	"	15.0 V	J		-25		-90		-25	"
										Subgroup 4 T_C = +25°C Min	Max					
C_I	3012	69						GND	Kd		12					pF
		70						"	H		"					"
		71						"	G		"					"
		72						"	F		"					"
		73						"	E		"					"
		74						"	Kb		"					"
		75						"	Kc		"					"
		76						"	Ka		"					"
		77	9/					"	D		"					"
		78		9/				"	C		"					"
		79			9/			"	B		"					"
		80				9/		"	A		"					"
		81					9/	"	EX		"					"
										Subgroup 9 T_C = +25°C Min	Max	Subgroup 10 T_C = +125°C Min	Max	Subgroup 11 T_C = -55°C Min	Max	
t_{PHL1}	3003 (Fig.7)	82	GND	GND	GND	IN	GND	5.0 V	A to J	34	685	41	820	30	600	ns
		83	"	GND	IN	GND	"	"	B to J	"	"	"	"	"	"	"
		84	"	IN	GND	"	"	"	C to J	"	"	"	"	"	"	"
		85	IN	GND	"	"	"	"	D to J	"	"	"	"	"	"	"
		86	GND	"	"	"	"	"	E to J	"	"	"	"	"	"	"
		87	"	"	"	"	"	"	F to J	"	"	"	"	"	"	"
		88	"	"	"	"	"	"	G to J	"	"	"	"	"	"	"
		89	"	"	"	"	"	"	H to J	"	"	"	"	"	"	"
t_{PLH1}		90	"	"	"	IN	"	"	A to J	26	535	32	640	24	475	"
		91	"	"	IN	GND	"	"	B to J	"	"	"	"	"	"	"
		92	"	IN	GND	"	"	"	C to J	"	"	"	"	"	"	"
		93	IN	GND	"	"	"	"	D to J	"	"	"	"	"	"	"
		94	GND	"	"	"	"	"	E to J	"	"	"	"	"	"	"
		95	"	"	"	"	"	"	F to J	"	"	"	"	"	"	"
		96	"	"	"	"	"	"	G to J	"	"	"	"	"	"	"
		97	"	"	"	"	"	"	H to J	"	"	"	"	"	"	"

TABLE III. Group A inspection for device type 04 - Continued.

Symbol	MIL-STD-883 method	Cases E, F, Z Symbol	Terminal conditions J	Kd	H	G	F	E	Kb	V_{SS}	Kc	Ka
		Test no.	1	2	3	4	5	6	7	8	9	10
t_{PHL2}	3003 (Fig. 8)	98	OUT	5.0 V	GND	GND	GND	GND	GND	GND	5.0 V	GND
		99	"	"	"	"	"	"	"	"	"	"
		100	"	"	"	"	"	"	"	"	"	"
		101	"	"	"	"	"	"	"	"	"	"
		102	"	"	"	"	"	IN	"	"	"	"
		103	"	"	"	"	IN	GND	"	"	"	"
		104	"	"	"	IN	GND	"	"	"	"	"
		105	"	"	IN	GND	"	"	"	"	"	"
t_{PLH2}		106	"	"	GND	"	"	"	"	"	"	"
		107	"	"	"	"	"	"	"	"	"	"
		108	"	"	"	"	"	"	"	"	"	"
		109	"	"	"	"	"	"	"	"	"	"
		110	"	"	"	"	"	IN	"	"	"	"
		111	"	"	"	"	IN	GND	"	"	"	"
		112	"	"	"	IN	GND	"	"	"	"	"
		113	"	"	IN	GND	GND	"	"	"	"	"
t_{PHL3}	3003 (Fig. 9)	114	"	"	GND	5.0 V	5.0 V	5.0 V	"	"	GND	5.0 V
		115	"	"	"	"	"	"	"	"	"	"
		116	"	"	"	"	"	"	"	"	"	"
		117	"	"	"	"	"	"	"	"	"	"
		118	"	"	"	"	"	IN	"	"	"	"
		119	"	"	"	"	IN	5.0 V	"	"	"	"
		120	"	"	"	IN	5.0 V	"	"	"	"	"
		121	"	"	IN	5.0 V	"	"	"	"	"	"
t_{PLH3}		122	"	"	5.0 V	"	"	"	"	"	"	"
		123	"	"	"	"	"	"	"	"	"	"
		124	"	"	"	"	"	"	"	"	"	"
		125	"	"	"	"	"	"	"	"	"	"
		126	"	"	"	"	"	IN	"	"	"	"
		127	"	"	"	"	IN	5.0 V	"	"	"	"
		128	"	"	"	IN	5.0 V	"	"	"	"	"
		129	"	"	IN	5.0 V	"	"	"	"	"	"
t_{PHL4}	3003 (Fig.10)	130	"	"	5.0 V	"	"	"	"	"	5.0 V	"
		131	"	"	"	"	"	"	"	"	"	"
		132	"	"	"	"	"	"	"	"	"	"
		133	"	"	"	"	"	"	"	"	"	"
		134	"	"	"	"	"	IN	"	"	"	"
		135	"	"	"	"	IN	5.0 V	"	"	"	"
		136	"	"	"	IN	5.0 V	"	"	"	"	"
		137	"	"	IN	5.0 V	"	"	"	"	"	"
t_{PLH4}		138	"	"	5.0 V	"	"	"	"	"	"	"
		139	"	"	"	"	"	"	"	"	"	"
		140	"	"	"	"	"	"	"	"	"	"
		141	"	"	"	"	"	"	"	"	"	"
		142	"	"	"	"	"	IN	"	"	"	"
		143	"	"	"	"	IN	GND	"	"	"	"
		144	"	"	"	IN	GND	"	"	"	"	"
		145	"	"	IN	GND	"	"	"	"	"	"
t_{PHL5}	3003 (Fig.11)	146	"	"	GND	"	"	5.0 V	5.0 V	"	GND	GND
		147	"	"	"	"	5.0 V	GND	"	"	"	"
		148	"	"	"	5.0 V	GND	"	"	"	"	"
		149	"	"	5.0 V	GND	"	"	"	"	"	"
		150	"	"	GND	"	"	IN	"	"	"	"
		151	"	"	"	"	IN	GND	"	"	"	"
		152	"	"	"	IN	GND	"	"	"	"	"
		153	"	"	IN	GND	"	"	"	"	"	"

See footnotes at end of device type 04.

TABLE III. Group A inspection for device type 04 - Continued.

Symbol	MIL-STD-883 method	Cases E, F, Z	Terminal conditions 1/						Measured terminal	Test limits						Unit
		Symbol	D	C	B	A	EX	V_{DD}		Subgroup 9 T_C = +25°C		Subgroup 10 T_C = +125°C		Subgroup 11 T_C = -55°C		
		Test no.	11	12	13	14	15	16		Min	Max	Min	Max	Min	Max	
t_{PHL2}	3003 (Fig.8)	98	GND	GND	GND	IN	GND	5.0 V	A to J	32	635	38	755	28	555	ns
		99	"	GND	IN	GND	"	"	B to J	"	"	"	"	"	"	"
		100	"	IN	GND	"	"	"	C to J	"	"	"	"	"	"	"
		101	IN	GND	"	"	"	"	D to J	"	"	"	"	"	"	"
		102	GND	"	"	"	"	"	E to J	"	"	"	"	"	"	"
		103	"	"	"	"	"	"	F to J	"	"	"	"	"	"	"
		104	"	"	"	"	"	"	G to J	"	"	"	"	"	"	"
		105	"	"	"	"	"	"	H to J	"	"	"	"	"	"	"
t_{PLH2}		106	"	"	"	IN	"	"	A to J	31	620	"	750	"	550	"
		107	"	"	IN	GND	"	"	B to J	"	"	"	"	"	"	"
		108	"	IN	GND	"	"	"	C to J	"	"	"	"	"	"	"
		109	IN	GND	"	"	"	"	D to J	"	"	"	"	"	"	"
		110	GND	"	"	"	"	"	E to J	"	"	"	"	"	"	"
		111	"	"	"	"	"	"	F to J	"	"	"	"	"	"	"
		112	"	"	"	"	"	"	G to J	"	"	"	"	"	"	"
		113	"	"	"	"	"	"	H to J	"	"	"	"	"	"	"
t_{PHL3}	3003 (Fig.9)	114	5.0 V	5.0 V	5.0 V	IN	"	"	A to J	38	760	45	905	33	665	"
		115	"	5.0 V	IN	5.0 V	"	"	B to J	"	"	"	"	"	"	"
		116	"	IN	5.0 V	"	"	"	C to J	"	"	"	"	"	"	"
		117	IN	5.0 V	"	"	"	"	D to J	"	"	"	"	"	"	"
		118	5.0 V	"	"	"	"	"	E to J	"	"	"	"	"	"	"
		119	"	"	"	"	"	"	F to J	"	"	"	"	"	"	"
		120	"	"	"	"	"	"	G to J	"	"	"	"	"	"	"
		121	"	"	"	"	"	"	H to J	"	"	"	"	"	"	"
t_{PLH3}		122	"	"	"	IN	"	"	A to J	33	650	32	655	25	490	"
		123	"	"	IN	5.0 V	"	"	B to J	"	"	"	"	"	"	"
		124	"	IN	5.0 V	"	"	"	C to J	"	"	"	"	"	"	"
		125	IN	5.0 V	"	"	"	"	D to J	"	"	"	"	"	"	"
		126	5.0 V	"	"	"	"	"	E to J	"	"	"	"	"	"	"
		127	"	"	"	"	"	"	F to J	"	"	"	"	"	"	"
		128	"	"	"	"	"	"	G to J	"	"	"	"	"	"	"
		129	"	"	"	"	"	"	H to J	"	"	"	"	"	"	"
t_{PHL4}	3003 (Fig.10)	130	"	"	"	IN	"	"	A to J	32	"	33	670	29	570	"
		131	"	"	IN	5.0 V	"	"	B to J	"	"	"	"	"	"	"
		132	"	IN	5.0 V	"	"	"	C to J	"	"	"	"	"	"	"
		133	IN	5.0 V	"	"	"	"	D to J	"	"	"	"	"	"	"
		134	5.0 V	"	"	"	"	"	E to J	"	"	"	"	"	"	"
		135	"	"	"	"	"	"	F to J	"	"	"	"	"	"	"
		136	"	"	"	"	"	"	G to J	"	"	"	"	"	"	"
		137	"	"	"	"	"	"	H to J	"	"	"	"	"	"	"
t_{PLH4}		138	"	"	"	IN	"	"	A to J	35	695	42	830	31	610	"
		139	"	"	IN	5.0 V	"	"	B to J	"	"	"	"	"	"	"
		140	"	IN	5.0 V	"	"	"	C to J	"	"	"	"	"	"	"
		141	IN	5.0 V	"	"	"	"	D to J	"	"	"	"	"	"	"
		142	5.0 V	"	"	"	"	"	E to J	"	"	"	"	"	"	"
		143	"	"	"	"	"	"	F to J	"	"	"	"	"	"	"
		144	"	"	"	"	"	"	G to J	"	"	"	"	"	"	"
		145	"	"	"	"	"	"	H to J	"	"	"	"	"	"	"
t_{PHL5}	3003 (Fig.11)	146	GND	GND	GND	IN	"	"	A to J	33	655	39	775	29	575	"
		147	"	GND	IN	GND	"	"	B to J	"	"	"	"	"	"	"
		148	"	IN	GND	"	"	"	C to J	"	"	"	"	"	"	"
		149	IN	GND	"	"	"	"	D to J	"	"	"	"	"	"	"
		150	GND	"	"	5.0 V	"	"	E to J	"	"	"	"	"	"	"
		151	"	"	5.0 V	GND	"	"	F to J	"	"	"	"	"	"	"
		152	"	5.0 V	GND	"	"	"	G to J	"	"	"	"	"	"	"
		153	5.0 V	GND	GND	"	"	"	H to J	"	"	"	"	"	"	"

TABLE III. Group A inspection for device type 04 - Continued.

Symbol	MIL-STD-883 method	Cases E, F, Z Symbol	Terminal conditions J	Kd	H	G	F	E	Kb	V_{SS}	Kc	Ka
		Test no.	1	2	3	4	5	6	7	8	9	10
t_{PLH5}	3003 (Fig.11)	154	OUT	5.0 V	GND	GND	GND	5.0 V	5.0 V	GND	GND	GND
		155	"	"	"	GND	5.0 V	GND	"	"	"	"
		156	"	"	"	5.0 V	GND	"	"	"	"	"
		157	"	"	5.0 V	GND	"	"	"	"	"	"
		158	"	"	GND	"	"	IN	"	"	"	"
		159	"	"	"	"	IN	GND	"	"	"	"
		160	"	"	"	IN	GND	"	"	"	"	"
		161	"	"	IN	GND	"	"	"	"	"	"
t_{PHL6}	3003 (Fig.12)	162	"	"	GND	"	"	5.0 V	"	"	5.0 V	"
		163	"	"	"	"	"	"	"	"	"	"
		164	"	"	"	"	"	"	"	"	"	"
		165	"	"	"	"	"	"	"	"	"	"
		166	"	"	"	"	"	IN	"	"	"	"
		167	"	"	"	"	IN	GND	"	"	"	"
		168	"	"	"	IN	GND	"	"	"	"	"
		169	"	"	IN	GND	"	"	"	"	"	
t_{PLH6}		170	"	"	GND	"	"	5.0 V	"	"	"	"
		171	"	"	"	"	"	"	"	"	"	"
		172	"	"	"	"	"	"	"	"	"	"
		173	"	"	"	"	"	"	"	"	"	"
		174	"	"	"	"	"	IN	"	"	"	"
		175	"	"	"	"	IN	GND	"	"	"	"
		176	"	"	"	IN	GND	"	"	"	"	"
		177	"	"	IN	GND	"	"	"	"	"	"
t_{PHL7}	3003 (Fig.13)	178	"	"	GND	"	"	"	"	"	GND	5.0 V
		179	"	"	"	"	"	"	"	"	"	"
		180	"	"	"	"	"	"	"	"	"	"
		181	"	"	"	"	"	"	"	"	"	"
		182	"	"	5.0 V	5.0 V	5.0 V	IN	"	"	"	"
		183	"	"	"	5.0 V	IN	5.0 V	"	"	"	"
		184	"	"	"	IN	5.0 V	"	"	"	"	"
		185	"	"	IN	5.0 V	5.0 V	"	"	"	"	"
t_{PLH7}		186	"	"	GND	GND	GND	GND	"	"	"	"
		187	"	"	"	"	"	"	"	"	"	"
		188	"	"	"	"	"	"	"	"	"	"
		189	"	"	"	"	"	"	"	"	"	"
		190	"	"	5.0 V	5.0 V	5.0 V	IN	"	"	"	"
		191	"	"	"	5.0 V	IN	5.0 V	"	"	"	"
		192	"	"	"	IN	5.0 V	"	"	"	"	"
		193	"	"	IN	5.0 V	5.0 V	"	"	"	"	"
t_{PHL8}	3003 (Fig.14)	194	"	"	GND	GND	GND	GND	"	"	5.0 V	"
		195	"	"	"	"	"	"	"	"	"	"
		196	"	"	"	"	"	"	"	"	"	"
		197	"	"	"	"	"	"	"	"	"	"
		198	"	"	5.0 V	5.0 V	5.0 V	IN	"	"	"	"
		199	"	"	"	5.0 V	IN	5.0 V	"	"	"	"
		200	"	"	"	IN	5.0 V	"	"	"	"	"
		201	"	"	IN	5.0 V	5.0 V	"	"	"	"	"
t_{PLH8}		202	"	"	GND	GND	GND	GND	"	"	"	"
		203	"	"	"	"	"	"	"	"	"	"
		204	"	"	"	"	"	"	"	"	"	"
		205	"	"	"	"	"	"	"	"	"	"
		206	"	"	5.0 V	5.0 V	5.0 V	IN	"	"	"	"
		207	"	"	"	5.0 V	IN	5.0 V	"	"	"	"
		208	"	"	"	IN	5.0 V	"	"	"	"	"
		209	"	"	IN	5.0 V	5.0 V	"	"	"	"	"

See footnotes at end of device type 04.

TABLE III. Group A inspection for device type 04 - Continued.

Symbol	MIL-STD-883 method	Cases E, F, Z Symbol	D	C	B	A	EX	V_{DD}	Measured terminal	Test limits Subgroup 9 T_C = +25°C Min	Subgroup 9 Max	Subgroup 10 T_C = +125°C Min	Subgroup 10 Max	Subgroup 11 T_C = -55°C Min	Subgroup 11 Max	Unit
		Test no.	11	12	13	14	15	16								
t_{PLH5}	3003 (Fig.11)	154	GND	GND	GND	IN	GND	5.0 V	A to J	27	540	32	645	24	485	ns
		155	"	GND	IN	GND	"	"	B to J	"	"	"	"	"	"	"
		156	"	IN	GND	"	"	"	C to J	"	"	"	"	"	"	"
		157	IN	GND	"	"	"	"	D to J	"	"	"	"	"	"	"
		158	GND	"	"	5.0 V	"	"	E to J	"	"	"	"	"	"	"
		159	"	"	5.0 V	GND	"	"	F to J	"	"	"	"	"	"	"
		160	"	5.0 V	GND	"	"	"	G to J	"	"	"	"	"	"	"
		161	5.0 V	GND	"	"	"	"	H to J	"	"	"	"	"	"	"
t_{PHL6}	3003 (Fig.12)	162	GND	"	"	IN	"	"	A to J	32	640	38	755	27	540	"
		163	"	"	IN	GND	"	"	B to J	"	"	"	"	"	"	"
		164	"	IN	GND	"	"	"	C to J	"	"	"	"	"	"	"
		165	IN	GND	"	"	"	"	D to J	"	"	"	"	"	"	"
		166	GND	"	"	5.0 V	"	"	E to J	"	"	"	"	"	"	"
		167	"	"	"	"	"	"	F to J	"	"	"	"	"	"	"
		168	"	"	"	"	"	"	G to J	"	"	"	"	"	"	"
		169	"	"	"	"	"	"	H to J	"	"	"	"	"	"	"
t_{PLH6}		170	"	"	"	IN	"	"	A to J	30	585	35	700	26	520	"
		171	"	"	IN	GND	"	"	B to J	"	"	"	"	"	"	"
		172	"	IN	GND	"	"	"	C to J	"	"	"	"	"	"	"
		173	IN	GND	"	"	"	"	D to J	"	"	"	"	"	"	"
		174	GND	"	"	5.0 V	"	"	E to J	"	"	"	"	"	"	"
		175	"	"	"	"	"	"	F to J	"	"	"	"	"	"	"
		176	"	"	"	"	"	"	G to J	"	"	"	"	"	"	"
		177	"	"	"	"	"	"	H to J	"	"	"	"	"	"	"
t_{PHL7}	3003 (Fig.13)	178	5.0 V	5.0 V	5.0 V	IN	"	"	A to J	34	675	40	790	30	590	"
		179	"	5.0 V	IN	5.0 V	"	"	B to J	"	"	"	"	"	"	"
		180	"	IN	5.0 V	"	"	"	C to J	"	"	"	"	"	"	"
		181	IN	5.0 V	5.0 V	"	"	"	D to J	"	"	"	"	"	"	"
		182	GND	GND	GND	GND	"	"	E to J	"	"	"	"	"	"	"
		183	"	"	"	"	"	"	F to J	"	"	"	"	"	"	"
		184	"	"	"	"	"	"	G to J	"	"	"	"	"	"	"
		185	"	"	"	"	"	"	H to J	"	"	"	"	"	"	"
t_{PLH7}		186	5.0 V	5.0 V	5.0 V	IN	"	"	A to J	31	615	36	730	27	550	"
		187	"	5.0 V	IN	5.0 V	"	"	B to J	"	"	"	"	"	"	"
		188	"	IN	5.0 V	"	"	"	C to J	"	"	"	"	"	"	"
		189	IN	5.0 V	5.0 V	"	"	"	D to J	"	"	"	"	"	"	"
		190	GND	GND	GND	GND	"	"	E to J	"	"	"	"	"	"	"
		191	"	"	"	"	"	"	F to J	"	"	"	"	"	"	"
		192	"	"	"	"	"	"	G to J	"	"	"	"	"	"	"
		193	"	"	"	"	"	"	H to J	"	"	"	"	"	"	"
t_{PHL8}	3003 (Fig.14)	194	5.0 V	5.0 V	5.0 V	IN	"	"	A to J	36	715	42	840	31	630	"
		195	"	5.0 V	IN	5.0 V	"	"	B to J	"	"	"	"	"	"	"
		196	"	IN	5.0 V	"	"	"	C to J	"	"	"	"	"	"	"
		197	IN	5.0 V	5.0 V	"	"	"	D to J	"	"	"	"	"	"	"
		198	GND	GND	GND	GND	"	"	E to J	"	"	"	"	"	"	"
		199	"	"	"	"	"	"	F to J	"	"	"	"	"	"	"
		200	"	"	"	"	"	"	G to J	"	"	"	"	"	"	"
		201	"	"	"	"	"	"	H to J	"	"	"	"	"	"	"
t_{PLH8}		202	5.0 V	5.0 V	5.0 V	IN	"	"	A to J	30	600	36	720	27	535	"
		203	"	5.0 V	IN	5.0 V	"	"	B to J	"	"	"	"	"	"	"
		204	"	IN	5.0 V	"	"	"	C to J	"	"	"	"	"	"	"
		205	IN	5.0 V	5.0 V	"	"	"	D to J	"	"	"	"	"	"	"
		206	GND	GND	GND	GND	"	"	E to J	"	"	"	"	"	"	"
		207	"	"	"	"	"	"	F to J	"	"	"	"	"	"	"
		208	"	"	"	"	"	"	G to J	"	"	"	"	"	"	"
		209	"	"	"	"	"	"	H to J	"	"	"	"	"	"	"

TABLE III. Group A inspection for device type 04 - Continued.

Symbol	MIL-STD-883 method	Cases E, F, Z	Terminal conditions									
		Symbol	J	Kd	H	G	F	E	Kb	V_{SS}	Kc	Ka
		Test no.	1	2	3	4	5	6	7	8	9	10
t_{PHL9}	3003 (Fig.15)	210	OUT	5.0 V	GND	GND	GND	GND	GND	GND	GND	IN
t_{PLH9}		211	"	"	"	"	"	"	GND	"	"	IN
t_{PHL10}	3003 (Fig.16)	212	"	"	"	"	"	"	IN	"	"	GND
t_{PLH10}		213	"	"	"	"	"	"	IN	"	"	"
t_{PHL11}	3003 (Fig.17)	214	"	"	"	"	"	"	GND	"	IN	"
t_{PLH11}		215	"	"	"	"	"	"	"	"	IN	"
t_{THL}	3004 (Fig.7)	216	"	"	"	"	"	"	"	"	GND	"
		217	"	"	"	"	"	"	"	"	"	"
		218	"	"	"	"	"	"	"	"	"	"
		219	"	"	"	"	"	"	"	"	"	"
		220	"	"	"	"	"	IN	"	"	"	"
		221	"	"	"	"	IN	GND	"	"	"	"
		222	"	"	"	IN	GND	"	"	"	"	"
		223	"	"	IN	GND	"	"	"	"	"	"
t_{TLH}		224	"	"	GND	"	"	"	"	"	"	"
		225	"	"	"	"	"	"	"	"	"	"
		226	"	"	"	"	"	"	"	"	"	"
		227	"	"	"	"	"	"	"	"	"	"
		228	"	"	"	"	"	IN	"	"	"	"
		229	"	"	"	"	IN	GND	"	"	"	"
		230	"	"	"	IN	GND	"	"	"	"	"
		231	"	"	IN	GND	"	"	"	"	"	"
t_{PLZ}	3003 (Fig.18)	232	"	IN	GND	"	"	"	"	"	"	"
t_{PHZ}		233	"	"	"	"	"	"	"	"	"	"
t_{PZL}		234	"	"	"	"	"	"	"	"	"	"
t_{PZH}		235	"	"	"	"	"	"	"	"	"	"

1/ Pins not designated may be "high" level logic, "low" level logic, or open. Exceptions are as follows: For $V_{IC(POS)}$ tests, the V_{SS} terminal shall be open; for $V_{IC(NEG)}$ tests, the V_{DD} terminal shall be open; for I_{SS} tests, the outputs shall be open.

2/ During $V_{IC(POS)}$ and $V_{IC(NEG)}$ tests. the V_{SS} terminals respectively shall be open.

3/ I_{SS} measurements shall be performed in sequence.

4/ V_{IL1} = 1.1 V at +25°C; 0.8 V at +125°C; 1.35 V at -55°C.

5/ V_{IL2} = 2.8 V at +25°C; 2.55 V at +125°C; 1.35 V at -55°C.

6/ V_{IH1} = 3.8 V at +25°C; 3.6 V at +125°C; 3.95 V at -55°C.

7/ V_{IH2} = 9.5 V at +25°C; 9.25 V at +125°C; 9.75 V at -55°C.

8/ The device manufacturer may, at his option, measure I_{IL} and I_{IH} at +25°C for each individual input or measure all inputs together.

9/ See 4.4.1c.

TABLE III. Group A inspection for device type 04 - Continued.

Symbol	MIL-STD-883 method	Cases E, F, Z							Measured terminal	Test limits						Unit
		Symbol	D	C	B	A	EX	V_{DD}		Subgroup 9 T_C = +25°C		Subgroup 10 T_C = +125°C		Subgroup 11 T_C = -55°C		
		Test no.	11	12	13	14	15	16		Min	Max	Min	Max	Min	Max	
t_{PLH9}	3003 (Fig.15)	210	GND	GND	GND	GND	GND	5.0 V	Ka to J	34	690	38	760	30	595	ns
t_{PLH9}		211	"	"	"	"	"	"	Ka to J	31	625	37	730	28	555	"
t_{PHL10}	3003 (Fig.16)	212	"	"	"	"	"	"	Kb to J	27	535	31	615	23	460	"
t_{PLH10}		213	"	"	"	"	"	"	Kb to J	26	515	30	605	23	465	"
t_{PHL11}	3003 (Fig.17)	214	"	"	"	"	"	"	Kc to J	21	420	24	475	18	360	"
t_{PLH11}		215	"	"	"	"	"	"	Kc to J	19	380	22	445	17	340	"
t_{THL}	3004 (Fig.7)	216	"	"	"	IN	"	"	J	7	135	8	160	6	115	"
		217	"	"	IN	GND	"	"	"	"	"	"	"	"	"	"
		218	"	IN	GND	"	"	"	"	"	"	"	"	"	"	"
		219	IN	GND	"	"	"	"	"	"	"	"	"	"	"	"
		220	GND	"	"	"	"	"	"	"	"	"	"	"	"	"
		221	"	"	"	"	"	"	"	"	"	"	"	"	"	"
		222	"	"	"	"	"	"	"	"	"	"	"	"	"	"
		223	"	"	"	"	"	"	"	"	"	"	"	"	"	"
t_{TLH}		224	"	"	"	IN	"	"	"	6	115	7	140	5	100	"
		225	"	"	IN	GND	"	"	"	"	"	"	"	"	"	"
		226	"	IN	GND	"	"	"	"	"	"	"	"	"	"	"
		227	IN	GND	"	"	"	"	"	"	"	"	"	"	"	"
		228	GND	"	"	"	"	"	"	"	"	"	"	"	"	"
		229	"	"	"	"	"	"	"	"	"	"	"	"	"	"
		230	"	"	"	"	"	"	"	"	"	"	"	"	"	"
		231	"	"	"	"	"	"	"	"	"	"	"	"	"	"
t_{PLZ}	3003 (Fig.18)	232	"	"	"	5.0 V	"	"	Kd to J	18	350	25	490	18	350	"
t_{PHZ}		233	"	"	"	GND	"	"	"	18	350	25	490	18	350	"
t_{PZL}		234	"	"	"	5.0 V	"	"	"	23	450	32	630	23	450	"
t_{PZH}		235	"	"	"	GND	"	"	"	23	450	32	630	23	450	"

TABLE III. Group A inspection for device type 51.

Symbol	MIL-STD-883 method	Cases A, C, D, X, Y Symbol	Terminal conditions 2aY	2aS	2A	2bS	2bY	1A	V_{SS}	1bY	3bS	3A	3aS
		Test no.	1	2	3	4	5	6	7	8	9	10	11
$V_{IC(POS)}$		1	(5) 2/	GND			(1) 2/	1 mA		(13) 2/			GND
		2	"	"	1 mA		"			"			"
		3	"	"			"			"		1 mA	"
$V_{IC(NEG)}$		4	"			GND	"	-1 mA	GND	"	GND		
		5	"		-1 mA	"	"		"	"	"		
		6	"			"	"		"	"	"		
I_{SS} 3/	3005	7	"	18.0 V	GND	"	"	GND	"	"	"	GND	18.0 V
		8	"	18.0 V	18.0 V	"	"	18.0 V	"	"	"	18.0 V	18.0 V
V_{OH5}	3006	9	"	15.0 V	GND	"	"	GND	"	"	"	GND	15.0 V
		10	"	"	"	"	"	"	"	"	"	"	"
		11	"	"	"	"	"	"	"	"	"	"	"
V_{OL6}	3007	12	"	"	"	"	"	15.0 V	"	"	"	"	"
		13	"	"	15.0 V	"	"	GND	"	"	"	"	"
		14	"	"	GND	"	"	GND	"	"	"	15.0 V	"
V_{IH1} 4/		15	"	5.0 V	GND	"	"	4.0 V	"	"	"	GND	5.0 V
		16	"	"	4.0 V	"	"	GND	"	"	"	GND	"
		17	"	"	GND	"	"	GND	"	"	"	4.0 V	"
V_{IH2} 4/		18	"	10.0 V	GND	"	"	8.0 V	"	"	"	GND	10.0 V
		19	"	"	8.0 V	"	"	GND	"	"	"	GND	"
		20	"	"	GND	"	"	GND	"	"	"	8.0 V	"
V_{IH3} 4/		21	"	15.0 V	GND	"	"	12.0 V	"	"	"	GND	15.0 V
		22	"	"	12.0 V	"	"	GND	"	"	"	GND	"
		23	"	"	GND	"	"	GND	"	"	"	12.0 V	"
V_{IL1} 4/		24	"	5.0 V	GND	"	"	1.0 V	"	"	"	GND	5.0 V
		25	"	"	1.0 V	"	"	GND	"	"	"	GND	"
		26	"	"	GND	"	"	GND	"	"	"	1.0 V	"
V_{IL2} 4/		27	"	10.0 V	GND	"	"	2.0 V	"	"	"	GND	10.0 V
		28	"	"	2.0 V	"	"	GND	"	"	"	GND	"
		29	"	"	GND	"	"	GND	"	"	"	2.0 V	"
V_{IL3} 4/		30	"	15.0 V	GND	"	"	3.0 V	"	"	"	GND	15.0 V
		31	"	"	3.0 V	"	"	GND	"	"	"	GND	"
		32	"	"	GND	"	"	GND	"	"	"	3.0 V	"
I_{OL1}		33	"	5.0 V	GND	"	"	5.0 V	"	"	"	GND	5.0 V
		34	" 0.4 V	"	5.0 V	"	"	GND	"	"	"	GND	"
		35	"	"	GND	"	"	GND	"	"	"	5.0 V	"
I_{OL2}		36	"	15.0 V	GND	"	"	15.0 V	"	"	"	GND	15.0 V
		37	" 1.5 V	"	15.0 V	"	"	GND	"	"	"	GND	"
		38	"	"	GND	"	"	GND	"	"	"	15.0 V	"
I_{OH1}		39	"	"	5.0 V	"	"	GND	"	"	"	5.0 V	"
		40	" 4.6 V	"	GND	"	"	5.0 V	"	"	"	5.0 V	"
		41	"	"	5.0 V	"	"	5.0 V	"	"	"	GND	"
I_{OH2}		42	"	15.0 V	15.0 V	"	"	GND	"	"	"	15.0 V	15.0 V
		43	"13.5 V	"	GND	"	"	15.0 V	"	"	"	15.0 V	"
		44	"	"	15.0 V	"	"	15.0 V	"	"	"	GND	"

See footnotes at end of device type 51.

TABLE III. Group A inspection for device type 51 - Continued.

Symbol	MIL-STD-883 method	Cases A, C, D, X, Y	Terminal conditions 1/			Measured terminal	Test limits						Unit
		Symbol	3Y	1aY	V_{DD}		Subgroup 1 T_C = +25°C		Subgroup 2 T_C = +125°C		Subgroup 3 T_C = -55°C		
		Test no.	12	13	14		Min	Max	Min	Max	Min	Max	
$V_{IC(POS)}$		1		(8) 2/	GND	1A		1.5					V
		2		"	"	2A		"					"
		3		"	"	3A		"					"
$V_{IC(NEG)}$		4		"		1A		-6					"
		5		"		2A		"					"
		6		"		3A		"					"
I_{SS} 3/	3005	7		"	18.0 V	V_{SS}		-50		-500			nA
		8		"	18.0 V	V_{SS}		-50		-500			nA
V_{OH5}	3006	9		"	15.0 V	1aY	14.95		14.95		14.95		V
		10		"	"	2aY	"		"		"		"
		11		"	"	3Y	"		"		"		"
V_{OL6}	3007	12		"	"	1aY		0.05		0.05		0.05	"
		13		"	"	2aY		"		"		"	"
		14		"	"	3Y		"		"		"	"
V_{IH1} 4/		15		"	5.0 V	1aY		0.5		0.5		0.5	"
		16		"	"	2aY		"		"		"	"
		17		"	"	3Y		"		"		"	"
V_{IH2} 4/		18		"	10.0 V	1aY		1.0		1.0		1.0	"
		19		"	"	2aY		"		"		"	"
		20		"	"	3Y		"		"		"	"
V_{IH3} 4/		21		"	15.0 V	1aY		1.5		1.5		1.5	"
		22		"	"	2aY		"		"		"	"
		23		"	"	3Y		"		"		"	"
V_{IL1} 4/		24		"	5.0 V	1aY	4.5		4.5		4.5		"
		25		"	"	2aY	"		"		"		"
		26		"	"	3Y	"		"		"		"
V_{IL2} 4/		27		"	10.0 V	1aY	9.0		9.0		9.0		"
		28		"	"	2aY	"		"		"		"
		29		"	"	3Y	"		"		"		"
V_{IL3} 4/		30		"	15.0 V	1aY	13.5		13.5		13.5		"
		31		"	"	2aY	"		"		"		"
		32		"	"	3Y	"		"		"		"
I_{OL1}		33		" 0.4 V	5.0 V	1aY	0.51		0.36		0.64		mA
		34		"	"	2aY	"		"		"		"
		35	0.4 V	"	"	3Y	"		"		"		"
I_{OL2}		36		" 1.5 V	15.0 V	1aY	3.4		2.4		4.2		"
		37		"	"	2aY	"		"		"		"
		38	1.5 V	"	"	3Y	"		"		"		"
I_{OH1}		39		" 4.6 V	5.0 V	1aY	-0.51		-0.36		-0.64		mA
		40		"	"	2aY	"		"		"		"
		41	4.6 V	"	"	3Y	"		"		"		"
I_{OH2}		42		" 13.5 V	15.0 V	1aY	-3.4		-2.4		-4.2		"
		43		"	"	2aY	"		"		"		"
		44	13.5 V	"	"	3Y	"		"		"		"

TABLE III. Group A inspection for device type 51 - Continued.

Symbol	MIL-STD-883 method	Cases A, C, D, X, Y Symbol	Terminal conditions 2aY	2aS	2A	2bS	2bY	1A	V_{SS}	1bY	3bS	3A	3aS
		Test no.	1	2	3	4	5	6	7	8	9	10	11
I_{IH1} 5/	3010	45	(5) 2/	18.0 V	18.0 V	GND	(1) 2/	18.0 V	GND	(13) 2/	GND	18.0 V	18.0 V
I_{IH2} 5/		46	"	"	GND	"	"	18.0 V	"	"	"	GND	"
		47	"	"	18.0 V	"	"	GND	"	"	"	GND	"
		48	"	"	GND	"	"	"	"	"	"	18.0 V	"
I_{IL1} 5/	3009	49	"	"	GND	"	"	"	"	"	"	GND	"
I_{IL2} 5/		50	"	"	18.0 V	"	"	"	"	"	"	18.0 V	"
		51	"	"	GND	"	"	18.0 V	"	"	"	18.0 V	"
		52	"	"	18.0 V	"	"	18.0 V	"	"	"	GND	"
C_I	3012	53	(5) 2/	GND	6/	GND	(1) 2/	6/	GND	(13) 2/	GND	6/	GND
		54	"	"		"	"		"	"	"		"
		55	"	"		"	"		"	"	"		"
t_{PHL}	3003 (Fig.6)	56	(5) 2/	5.0 V	GND	GND	(1) 2/	IN	GND	(13) 2/	GND	GND	5.0 V
		57	"	"	IN	"	"	GND	"	"	"	GND	"
		58	"	"	GND	"	"	GND	"	"	"	IN	"
t_{PLH}		59	"	"	GND	"	"	IN	"	"	"	GND	"
		60	"	"	IN	"	"	GND	"	"	"	GND	"
		61	"	"	GND	"	"	GND	"	"	"	IN	"
t_{THL}	3004 (Fig.6)	62	"	"	GND	"	"	IN	"	"	"	GND	"
		63	"	"	IN	"	"	GND	"	"	"	GND	"
		64	"	"	GND	"	"	GND	"	"	"	IN	"
t_{TLH}		65	"	"	GND	"	"	IN	"	"	"	GND	"
		66	"	"	IN	"	"	GND	"	"	"	GND	"
		67	"	"	GND	"	"	GND	"	"	"	IN	"

1/ Pins not designated may be "high" level logic, "low" level logic, or open. Exceptions are as follows: For $V_{IC(POS)}$ tests, the V_{SS} terminal shall be open; for $V_{IC(NEG)}$ tests, the V_{DD} terminal shall be open; for I_{SS} tests, the outputs shall be open.

2/ Terminals in parentheses are connected together as indicated by the included number.

3/ I_{SS} measurements shall be performed in sequence.

4/ The V_{IL} and V_{IH} input test requirements are acceptable, if the output state limit is met, attributes data required.

5/ The device manufacturer may, at his option, measure I_{IL} and I_{IH} at +25°C for each individual input or measure all outputs together.

6/ See 4.4.1c.

TABLE III. Group A inspection for device type 51 - Continued.

Symbol	MIL-STD-883 method	Cases A, C, D, X, Y Symbol	Terminal conditions 1/ 3Y	1aY	V_{DD}	Measured terminal	Test limits Subgroup 1 T_C = +25°C Min	Max	Subgroup 2 T_C = +125°C Min	Max	Subgroup 3 T_C = -55°C Min	Max	Unit
		Test no.	12	13	14								
I_{IH1} 5/	3010	45		(8) 2/	18.0 V	All inputs together		6.0					nA
I_{IH2} 5/		46		"	"	1A		1.0		45			"
		47		"	"	2A		"		"			"
		48		"	"	3A		"		"			"
I_{IL1} 5/	3009	49		"	"	All inputs together		-6.0					"
I_{IL2} 5/		50		"	"	1A		-1.0		-45			"
		51		"	"	2A		"		"			"
		52		"	"	3A		"		"			"
							Subgroup 4 T_C = +25°C Min	Max					
C_I	3012	53		(8) 2/	GND	1A		12					pF
		54		"	"	2A		"					"
		55		"	"	3A		"					"
							Subgroup 9 T_C = +25°C Min	Max	Subgroup 10 T_C = +125°C Min	Max	Subgroup 11 T_C = -55°C Min	Max	
t_{PHL}	3003 (Fig.6)	56		(8) 2/	5.0 V	1A to 1aY	6	110	9	155	6	110	ns
		57		"	"	2A to 2aY	"	"	"	"	"	"	"
		58		"	"	3A to 3Y	"	"	"	"	"	"	"
t_{PLH}		59		"	"	1A to 1aY	"	"	"	"	"	"	"
		60		"	"	2A to 2aY	"	"	"	"	"	"	"
		61		"	"	3A to 3Y	"	"	"	"	"	"	"
t_{THL}	3004 (Fig.6)	62		"	"	1aY	"	200	"	280	"	200	"
		63		"	"	2aY	"	"	"	"	"	"	"
		64		"	"	3Y	"	"	"	"	"	"	"
t_{TLH}		65		"	"	1aY	"	"	"	"	"	"	"
		66		"	"	2aY	"	"	"	"	"	"	"
		67		"	"	3Y	"	"	"	"	"	"	"

TABLE III. Group A inspection for device type 52.

Symbol	MIL-STD-883 method	Cases E, F, Z	Terminal conditions										
		Symbol	B4	A3	B3	A2	B2	A1	B1	V_{SS}	Ka	D1	D2
		Test no.	1	2	3	4	5	6	7	8	9	10	11
$V_{IC(POS)}$		1							1 mA				
		2						1 mA					
		3					1 mA						
		4				1 mA							
		5			1 mA								
		6		1 mA									
		7	1 mA										
		8											
		9									1 mA		
		10											
$V_{IC(NEG)}$		11							-1 mA	GND			
		12						-1 mA		"			
		13					-1 mA			"			
		14				-1 mA				"			
		15			-1 mA					"			
		16		-1 mA						"			
		17	-1 mA							"			
		18								"			
		19								"	-1 mA		
		20								"			
I_{SS} 2/	3005	21	GND	18.0 V	GND	18.0 V	GND	18.0 V	GND	"	18.0 V		
		22	GND	GND	GND	GND	GND	GND	GND	"	"		
		23	18.0 V	GND	18.0 V	GND	18.0 V	GND	18.0 V	"	"		
		24	18.0 V	18.0 V	18.0 V	18.0 V	18.0 V	18.0 V	18.0 V	"	GND		
V_{OH5}	3006	25	15.0 V	GND	GND	GND	GND	GND	GND	"	15.0 V		
		26	GND	15.0 V	GND	"	"	"	"	"	"		
		27	"	GND	15.0 V	"	"	"	"	"	"		
		28	"	"	GND	15.0 V	"	"	"	"	"		
		29	"	"	"	GND	15.0 V	"	"	"	"		
		30	"	"	"	"	GND	15.0 V	"	"	"		
		31	"	"	"	"	"	GND	15.0 V	"	"		
		32	"	"	"	"	"	GND	GND	"	"		
V_{OL6}	3007	33	15.0 V	15.0 V	15.0 V	15.0 V	15.0 V	15.0 V	15.0 V	"	GND		
		34	"	"	"	"	"	"	"	"	"		
		35	"	"	"	"	"	"	"	"	"		
		36	"	"	"	"	"	"	"	"	"		
		37	GND	GND	GND	GND	GND	GND	GND	"	15.0 V		
		38	"	"	"	"	"	"	"	"	"		
		39	"	"	"	"	"	"	"	"	"		
		40	"	"	"	"	"	"	"	"	"		
V_{IH1} 3/		41	3.5 V	3.5 V	3.5 V	3.5 V	3.5 V	3.5 V	3.5 V	"	1.5 V		
		42	"	"	"	"	"	"	"	"	"		
		43	"	"	"	"	"	"	"	"	"		
		44	"	"	"	"	"	"	"	"	"		
		45	1.5 V	1.5 V	1.5 V	1.5 V	1.5 V	1.5 V	1.5 V	"	5.0 V		
		46	"	"	"	"	"	"	"	"	"		
		47	"	"	"	"	"	"	"	"	"		
		48	"	"	"	"	"	"	"	"	"		
V_{IH2} 3/		49	7.0 V	7.0 V	7.0 V	7.0 V	7.0 V	7.0 V	7.0 V	"	3.0 V		
		50	"	"	"	"	"	"	"	"	"		
		51	"	"	"	"	"	"	"	"	"		
		52	"	"	"	"	"	"	"	"	"		
		53	3.0 V	3.0 V	3.0 V	3.0 V	3.0 V	3.0 V	3.0 V	"	10.0 V		
		54	"	"	"	"	"	"	"	"	"		
		55	"	"	"	"	"	"	"	"	"		
		56	"	"	"	"	"	"	"	"	"		

See footnotes at end of device type 52.

TABLE III. Group A inspection for device type 52 - Continued.

Symbol	MIL-STD-883 method	Cases E, F, Z Symbol	Terminal conditions 1/ D3	D4	Kb	A4	V_{DD}	Measured terminal	Test limits Subgroup 1 T_C = +25°C Min	Max	Subgroup 2 T_C = +125°C Min	Max	Subgroup 3 T_C = -55°C Min	Max	Unit
		Test no.	12	13	14	15	16								
$V_{IC(POS)}$		1					GND	B1		1.5					V
		2					"	A1		"					"
		3					"	B2		"					"
		4					"	A2		"					"
		5					"	B3		"					"
		6					"	A3		"					"
		7					"	B4		"					"
		8				1 mA	"	A4		"					"
		9					"	Ka		"					"
		10			1 mA		"	Kb		"					"
$V_{IC(NEG)}$		11					"	B1		-6.0					"
		12					"	A1		"					"
		13					"	B2		"					"
		14					"	A2		"					"
		15					"	B3		"					"
		16					"	A3		"					"
		17					"	B4		"					"
		18				-1 mA	"	A4		"					"
		19					"	Ka		"					"
		20			-1 mA		"	Kb		"					"
I_{SS} 2/	3005	21			18.0 V	18.0 V	18.0 V	V_{SS}		-75		-750			nA
		22			"	GND	"	"		"		"			"
		23			"	GND	"	"		"		"			"
		24			GND	18.0 V	"	"		"		"			"
V_{OH5}	3006	25			15.0 V	GND	15.0 V	D4	14.95		14.95		14.95		V
		26			"	"	"	D3	"		"		"		"
		27			"	"	"	D3	"		"		"		"
		28			"	"	"	D2	"		"		"		"
		29			"	"	"	D2	"		"		"		"
		30			"	"	"	D1	"		"		"		"
		31			"	"	"	D1	"		"		"		"
		32			"	15.0 V	"	D4	"		"		"		"
V_{OL6}	3007	33			GND	"	"	D4		0.05		0.05		0.05	"
		34			"	"	"	D3		"		"		"	"
		35			"	"	"	D2		"		"		"	"
		36			"	"	"	D1		"		"		"	"
		37			15.0 V	GND	"	D4		"		"		"	"
		38			"	"	"	D3		"		"		"	"
		39			"	"	"	D2		"		"		"	"
		40			"	"	"	D1		"		"		"	"
V_{IH1} 3/		41			1.5 V	3.5 V	5.0 V	D4		0.5		0.5		0.5	"
		42			"	"	"	D3		"		"		"	"
		43			"	"	"	D2		"		"		"	"
		44			"	"	"	D1		"		"		"	"
		45			5.0 V	1.5 V	"	D4		"		"		"	"
		46			"	"	"	D3		"		"		"	"
		47			"	"	"	D2		"		"		"	"
		48			"	"	"	D1		"		"		"	"
V_{IH2} 3/		49			3.0 V	7.0 V	10.0 V	D4		1.0		1.0		1.0	"
		50			"	"	"	D3		"		"		"	"
		51			"	"	"	D2		"		"		"	"
		52			"	"	"	D1		"		"		"	"
		53			10.0 V	3.0 V	"	D4		"		"		"	"
		54			"	"	"	D3		"		"		"	"
		55			"	"	"	D2		"		"		"	"
		56			"	"	"	D1		"		"		"	"

TABLE III. Group A inspection for device type 52 - Continued.

Symbol	MIL-STD-883 method	Cases E, F, Z Symbol	Terminal conditions B4	A3	B3	A2	B2	A1	B1	V_{SS}	Ka	D1	D2
		Test no.	1	2	3	4	5	6	7	8	9	10	11
V_{IH3} 3/		57	11.0 V	11.0 V	11.0 V	11.0 V	11.0 V	11.0 V	11.0 V	GND	4.0 V		
		58	"	"	"	"	"	"	"	"	"		
		59	"	"	"	"	"	"	"	"	"		
		60	"	"	"	"	"	"	"	"	"		
		61	4.0 V	4.0 V	4.0 V	4.0 V	4.0 V	4.0 V	4.0 V	"	15.0 V		
		62	"	"	"	"	"	"	"	"	"		
		63	"	"	"	"	"	"	"	"	"		
		64	"	"	"	"	"	"	"	"	"		
V_{IL1} 3/		65	3.5 V	GND	GND	GND	GND	GND	GND	"	5.0 V		
		66	GND	3.5 V	1.5 V	"	"	"	"	"	"		
		67	"	1.5 V	3.5 V	"	"	"	"	"	"		
		68	"	GND	GND	3.5 V	1.5 V	"	"	"	"		
		69	"	"	"	1.5 V	3.5 V	"	"	"	"		
		70	"	"	"	GND	GND	3.5 V	1.5 V	"	"		
		71	"	"	"	"	"	1.5 V	3.5 V	"	"		
		72	1.5 V	"	"	"	"	GND	GND	"	"		
V_{IL2} 3/		73	7.0 V	"	"	"	"	"	"	"	10.0 V		
		74	GND	7.0 V	3.0 V	"	"	"	"	"	"		
		75	"	3.0 V	7.0 V	"	"	"	"	"	"		
		76	"	GND	GND	7.0 V	3.0 V	"	"	"	"		
		77	"	"	"	3.0 V	7.0 V	"	"	"	"		
		78	"	"	"	GND	GND	7.0 V	3.0 V	"	"		
		79	"	"	"	"	"	3.0 V	7.0 V	"	"		
		80	3.0 V	"	"	"	"	GND	GND	"	"		
V_{IL3} 3/		81	11.0 V	"	"	"	"	"	"	"	15.0 V		
		82	GND	11.0 V	4.0 V	"	"	"	"	"	"		
		83	"	4.0 V	11.0 V	"	"	"	"	"	"		
		84	"	GND	GND	11.0 V	4.0 V	"	"	"	"		
		85	"	"	"	4.0 V	11.0 V	"	"	"	"		
		86	"	"	"	GND	GND	11.0 V	4.0 V	"	"		
		87	"	"	"	"	"	4.0 V	11.0 V	"	"		
		88	4.0 V	"	"	"	"	GND	GND	"	"		
I_{OL1}		89	5.0 V	5.0 V	5.0 V	5.0 V	5.0 V	5.0 V	5.0 V	"	GND		
		90	"	"	"	"	"	"	"	"	"		
		91	"	"	"	"	"	"	"	"	"		0.4 V
		92	"	"	"	"	"	"	"	"	"	0.4 V	
		93	GND	GND	GND	GND	GND	GND	GND	"	5.0 V		
		94	"	"	"	"	"	"	"	"	"		
		95	"	"	"	"	"	"	"	"	"		0.4 V
		96	"	"	"	"	"	"	"	"	"	0.4 V	
I_{OL2}		97	15.0 V	15.0 V	15.0 V	15.0 V	15.0 V	15.0 V	15.0 V	"	GND		
		98	"	"	"	"	"	"	"	"	"		
		99	"	"	"	"	"	"	"	"	"		1.5 V
		100	"	"	"	"	"	"	"	"	"	1.5 V	
		101	GND	GND	GND	GND	GND	GND	GND	"	15.0 V		
		102	"	"	"	"	"	"	"	"	"		
		103	"	"	"	"	"	"	"	"	"		1.5 V
		104	"	"	"	"	"	"	"	"	"	1.5 V	
I_{OH1}		105	5.0 V	"	"	"	"	"	"	"	5.0 V		
		106	GND	5.0 V	"	"	"	"	"	"	"		
		107	"	GND	5.0 V	"	"	"	"	"	"		
		108	"	"	GND	5.0 V	"	"	"	"	"		4.6 V
		109	"	"	"	GND	5.0 V	"	"	"	"		4.6 V
		110	"	"	"	"	GND	5.0 V	"	"	"	4.6 V	
		111	"	"	"	"	"	GND	5.0 V	"	"	4.6 V	
		112	"	"	"	"	"	GND	GND	"	"		

See footnotes at end of device type 52.

TABLE III. Group A inspection for device type 52 - Continued.

Symbol	MIL-STD-883 method	Cases E, F, Z Symbol	Terminal conditions 1/ D3	D4	Kb	A4	V_{DD}	Measured terminal	Test limits Subgroup 1 T_C = +25°C Min	Max	Subgroup 2 T_C = +125°C Min	Max	Subgroup 3 T_C = -55°C Min	Max	Unit
		Test no.	12	13	14	15	16								
V_{IH3} 3/		57			4.0 V	11.0 V	15.0 V	D4		1.5		1.5		1.5	V
		58			"	"	"	D3		"		"		"	"
		59			"	"	"	D2		"		"		"	"
		60			"	"	"	D1		"		"		"	"
		61			15.0 V	4.0 V	"	D4		"		"		"	"
		62			"	"	"	D3		"		"		"	"
		63			"	"	"	D2		"		"		"	"
		64			"	"	"	D1		"		"		"	"
V_{IL1} 3/		65			5.0 V	1.5 V	5.0 V	D4	4.5		4.5		4.5		"
		66			"	GND	"	D3	"		"		"		"
		67			"	"	"	D3	"		"		"		"
		68			"	"	"	D2	"		"		"		"
		69			"	"	"	D2	"		"		"		"
		70			"	"	"	D1	"		"		"		"
		71			"	"	"	D1	"		"		"		"
		72			"	3.5 V	"	D4	"		"		"		"
V_{IL2} 3/		73			10.0 V	3.0 V	10.0 V	D4	9.0		9.0		9.0		"
		74			"	GND	"	D3	"		"		"		"
		75			"	"	"	D3	"		"		"		"
		76			"	"	"	D2	"		"		"		"
		77			"	"	"	D2	"		"		"		"
		78			"	"	"	D1	"		"		"		"
		79			"	"	"	D1	"		"		"		"
		80			"	7.0 V	"	D4	"		"		"		"
V_{IL3} 3/		81			15.0 V	4.0 V	15.0 V	D4	13.5		13.5		13.5		"
		82			"	GND	"	D3	"		"		"		"
		83			"	"	"	D3	"		"		"		"
		84			"	"	"	D2	"		"		"		"
		85			"	"	"	D2	"		"		"		"
		86			"	"	"	D1	"		"		"		"
		87			"	"	"	D1	"		"		"		"
		88			"	11.0 V	"	D4	"		"		"		"
I_{OL1}		89		0.4 V	GND	5.0 V	5.0 V	D4	0.51		0.36		0.64		mA
		90	0.4 V		"	"	"	D3	"		"		"		"
		91			"	"	"	D2	"		"		"		"
		92			"	"	"	D1	"		"		"		"
		93		0.4 V	5.0 V	GND	"	D4	"		"		"		"
		94	0.4 V		"	"	"	D3	"		"		"		"
		95			"	"	"	D2	"		"		"		"
		96			"	"	"	D1	"		"		"		"
I_{OL2}		97		1.5 V	GND	15.0 V	15.0 V	D4	3.4		2.4		4.2		"
		98	1.5 V		"	"	"	D3	"		"		"		"
		99			"	"	"	D2	"		"		"		"
		100			"	"	"	D1	"		"		"		"
		101		1.5 V	15.0 V	GND	"	D4	"		"		"		"
		102	1.5 V		"	"	"	D3	"		"		"		"
		103			"	"	"	D2	"		"		"		"
		104			"	"	"	D1	"		"		"		"
I_{OH1}		105		4.6 V	5.0 V	GND	5.0 V	D4	-0.51		-0.36		-0.64		"
		106	4.6 V		"	"	"	D3	"		"		"		"
		107	4.6 V		"	"	"	D3	"		"		"		"
		108			"	"	"	D2	"		"		"		"
		109			"	"	"	D2	"		"		"		"
		110			"	"	"	D1	"		"		"		"
		111			"	"	"	D1	"		"		"		"
		112		4.6 V	"	5.0 V	"	D4	"		"		"		"

TABLE III. Group A inspection for device type 52 - Continued.

Symbol	MIL-STD-883 method	Cases E, F, Z Symbol	Terminal conditions B4	A3	B3	A2	B2	A1	B1	V_{SS}	Ka	D1	D2
		Test no.	1	2	3	4	5	6	7	8	9	10	11
I_{OH2}		113	15.0 V	GND	GND	GND	GND	GND	GND	GND	15.0 V		
		114	GND	15.0 V	GND	"	"	"	"	"	"		
		115	"	GND	15.0 V	"	"	"	"	"	"		
		116	"	"	GND	15.0 V	"	"	"	"	"		13.5 V
		117	"	"	"	GND	15.0 V	"	"	"	"		13.5 V
		118	"	"	"	"	GND	15.0 V	"	"	"	13.5 V	
		119	"	"	"	"	"	GND	15.0 V	"	"	13.5 V	
		120	"	"	"	"	"	GND	GND	"	"		
I_{IH1} 4/	3010	121	18.0 V	18.0 V	18.0 V	18.0 V	18.0 V	18.0 V	18.0 V	"	18.0 V		
I_{IH2} 4/		122	18.0 V	GND	GND	GND	GND	GND	GND	"	GND		
		123	GND	18.0 V	GND	"	"	"	"	"	"		
		124	"	GND	18.0 V	"	"	"	"	"	"		
		125	"	"	GND	18.0 V	"	"	"	"	"		
		126	"	"	"	GND	18.0 V	"	"	"	"		
		127	"	"	"	"	GND	18.0 V	"	"	"		
		128	"	"	"	"	"	GND	18.0 V	"	"		
		129	"	"	"	"	"	"	GND	"	18.0 V		
		130	"	"	"	"	"	"	"	"	GND		
		131	"	"	"	"	"	"	"	"	"		
I_{IL1} 4/	3009	132	"	"	"	"	"	"	"	"	"		
I_{IL2} 4/		133	"	18.0 V	18.0 V	18.0 V	18.0 V	18.0 V	18.0 V	"	18.0 V		
		134	18.0 V	GND	18.0 V	"	"	"	"	"	"		
		135	"	18.0 V	GND	"	"	"	"	"	"		
		136	"	"	18.0 V	GND	"	"	"	"	"		
		137	"	"	"	18.0 V	GND	"	"	"	"		
		138	"	"	"	"	18.0 V	GND	"	"	"		
		139	"	"	"	"	"	18.0 V	GND	"	"		
		140	"	"	"	"	"	"	18.0 V	"	GND		
		141	"	"	"	"	"	"	"	"	18.0 V		
		142	"	"	"	"	"	"	"	"	18.0 V		
C_I	3012	143	5/							GND			
		144		5/						"			
		145			5/					"			
		146				5/				"			
		147					5/			"			
		148						5/		"			
		149							5/	"			
		150								"			
		151								"	5/		
		152								"			
t_{PHL}	3003 (Fig.6)	153	IN	GND	GND	GND	GND	GND	GND	GND	5.0 V		
		154	GND	"	IN	"	GND	"	"	"	"		
		155	"	"	GND	"	IN	"	"	"	"		OUT
		156	"	"	"	"	GND	"	IN	"	"	OUT	
		157	"	"	"	"	GND	"	GND	"	"		

See footnotes at end of device type 52.

TABLE III. Group A inspection for device type 52 - Continued.

Symbol	MIL-STD-883 method	Cases E, F, Z Symbol	Terminal conditions 1/ D3	D4	Kb	A4	V_{DD}	Measured terminal	Test limits Subgroup 1 T_C = +25°C Min	Max	Subgroup 2 T_C = +125°C Min	Max	Subgroup 3 T_C = -55°C Min	Max	Unit
		Test no.	12	13	14	15	16								
I_{OH2}		113		13.5 V	15.0 V	GND	15.0 V	D4	-3.4		-2.4		-4.2		mA
		114	13.5 V		"	"	"	D3	"		"		"		"
		115	13.5 V		"	"	"	D3	"		"		"		"
		116			"	"	"	D2	"		"		"		"
		117			"	"	"	D2	"		"		"		"
		118			"	"	"	D1	"		"		"		"
		119			"	"	"	D1	"		"		"		"
		120		13.5 V	"	15.0 V	"	D4	"		"		"		"
I_{IH1} 4/	3010	121			18.0 V	18.0 V	18.0 V	All inputs together		10					nA
I_{IH2} 4/		122			GND	GND	"	B4		1.0		45			"
		123			"	"	"	A3		"		"			"
		124			"	"	"	B3		"		"			"
		125			"	"	"	A2		"		"			"
		126			"	"	"	B2		"		"			"
		127			"	"	"	A1		"		"			"
		128			"	"	"	B1		"		"			"
		129			"	"	"	Ka		"		"			"
		130			18.0 V	"	"	Kb		"		"			"
		131			GND	18.0 V	"	A4		"		"			"
I_{IL1} 4/	3009	132			GND	GND	"	All inputs together		-10					"
I_{IL2} 4/		133			18.0 V	18.0 V	"	B4		-1.0		-45			"
		134			"	"	"	A3		"		"			"
		135			"	"	"	B3		"		"			"
		136			"	"	"	A2		"		"			"
		137			"	"	"	B2		"		"			"
		138			"	"	"	A1		"		"			"
		139			"	"	"	B1		"		"			"
		140			"	"	"	Ka		"		"			"
		141			GND	"	"	Kb		"		"			"
		142			18.0 V	GND	"	A4		"		"			"
									Subgroup 4 T_C = +25°C Min	Max					
C_I	3012	143					GND	B4		12.0					pF
		144					"	A3		"					"
		145					"	B2		"					"
		146					"	A2		"					"
		147					"	B2		"					"
		148					"	A1		"					"
		149					"	B1		"					"
		150				5/	"	A4		"					"
		151					"	Ka		"					"
		152			5/		"	Kb		"					"
									Subgroup 9 T_C = +25 °C Min	Max	Subgroup 10 T_C = +125°C Min	Max	Subgroup 11 T_C = -55°C Min	Max	
t_{PHL}	3003 (Fig. 6)	153		OUT	5.0 V	GND	5.0 V	D4	13	300	18	420	13	300	ns
		154	OUT		"	"	"	D3	"	"	"	"	"	"	"
		155			"	"	"	D2	"	"	"	"	"	"	"
		156			"	"	"	D1	"	"	"	"	"	"	"
		157		OUT	"	IN	"	D4	"	"	"	"	"	"	"

TABLE III. Group A inspection for device type 52 - Continued.

Symbol	MIL-STD-883 method	Cases E, F, Z Symbol	Terminal conditions B4	A3	B3	A2	B2	A1	B1	V_{SS}	Ka	D1	D2
		Test no.	1	2	3	4	5	6	7	8	9	10	11
t_{PHL}	3003 (Fig.6)	158	GND	IN	GND	GND	GND	GND	GND	GND	5.0 V		
		159	"	GND	"	IN	"	GND	"	"	"		OUT
		160	"	"	"	GND	"	IN	"	"	"	OUT	
		161	"	"	"	"	"	GND	"	"	IN		
		162	"	5.0 V	"	"	"	"	"	"	"		
		163	"	GND	"	5.0 V	"	"	"	"	"		OUT
		164	"	"	"	GND	"	5.0 V	"	"	"	OUT	
		165	5.0 V	"	"	"	"	GND	"	"	5.0 V		
		166	GND	"	5.0 V	"	"	"	"	"	"		
		167	"	"	GND	"	5.0 V	"	"	"	"		OUT
		168	"	"	"	"	GND	"	5.0 V	"	"	OUT	
t_{PLH}		169	IN	"	"	"	"	"	GND	"	"		
		170	GND	"	IN	"	"	"	"	"	"		
		171	"	"	GND	"	IN	"	"	"	"		OUT
		172	"	"	"	"	GND	"	IN	"	"	OUT	
		173	"	"	"	"	"	"	GND	"	"		
		174	"	IN	"	"	"	"	"	"	"		
		175	"	GND	"	IN	"	"	"	"	"		OUT
		176	"	"	"	GND	"	IN	"	"	"	OUT	
		177	"	"	"	"	"	GND	"	"	IN		
		178	"	5.0 V	"	"	"	"	"	"	"		
		179	"	GND	"	5.0 V	"	"	"	"	"		OUT
		180	"	"	"	GND	"	5.0 V	"	"	"	OUT	
		181	5.0 V	"	"	"	"	GND	"	"	5.0 V		
		182	GND	"	5.0 V	"	"	"	"	"	"		
		183	"	"	GND	"	5.0 V	"	"	"	"		OUT
		184	"	"	"	"	GND	"	5.0 V	"	"	OUT	
t_{THL}	3004 (Fig.6)	185	IN	"	"	"	"	"	GND	"	"		
		186	GND	"	IN	"	"	"	"	"	"		
		187	"	"	GND	"	IN	"	"	"	"		OUT
		188	"	"	"	"	GND	"	IN	"	"	OUT	
		189	"	"	"	"	"	"	GND	"	"		
		190	"	IN	"	"	"	"	"	"	"		
		191	"	GND	"	IN	"	"	"	"	"		OUT
		192	"	"	"	GND	"	IN	"	"	"	OUT	
		193	"	"	"	"	"	GND	"	"	IN		
		194	"	5.0 V	"	"	"	"	"	"	"		
		195	"	GND	"	5.0 V	"	"	"	"	"		OUT
		196	"	"	"	GND	"	5.0 V	"	"	"	OUT	
		197	5.0 V	"	"	"	"	GND	"	"	5.0 V		
		198	GND	"	5.0 V	"	"	"	"	"	"		
		199	"	"	GND	"	5.0 V	"	"	"	"		OUT
		200	"	"	"	"	GND	"	5.0 V	"	"	OUT	
t_{TLH}		201	IN	"	"	"	"	"	GND	"	"		
		202	GND	"	IN	"	"	"	"	"	"		
		203	"	"	GND	"	IN	"	"	"	"		OUT
		204	"	"	"	"	GND	"	IN	"	"	OUT	
		205	"	"	"	"	"	"	GND	"	"		
		206	"	IN	"	"	"	"	"	"	"		
		207	"	GND	"	IN	"	"	"	"	"		OUT
		208	"	"	"	GND	"	IN	"	"	"	OUT	
		209	"	"	"	"	"	GND	"	"	IN		
		210	"	5.0 V	"	"	"	"	"	"	"		
		211	"	GND	"	5.0 V	"	"	"	"	"		OUT
		212	"	"	"	GND	"	5.0 V	"	"	"	OUT	
		213	5.0 V	"	"	"	"	GND	"	"	5.0 V		
		214	GND	"	5.0 V	"	"	"	"	"	"		
		215	"	"	GND	"	5.0 V	"	"	"	"		OUT
		216	"	"	GND	"	GND	"	5.0 V	"	"	OUT	

1/ Pins not designated may be "high" level logic, "low" level logic, or open. Exceptions are as follows: For $V_{IC(POS)}$ tests, the V_{SS} terminal shall be open; for $V_{IC(NEG)}$ tests, the V_{DD} terminal shall be open; for I_{SS} tests, the outputs shall be open.

2/ I_{SS} measurements shall be performed in sequence.

TABLE III. Group A inspection for device type 52 - Continued.

Symbol	MIL-STD-883 method	Cases E, F, Z Symbol	Terminal conditions 1/ D3	D4	Kb	A4	V_{DD}	Measured terminal	Test limits Subgroup 9 T_C = +25°C Min	Max	Subgroup 10 T_C = +125°C Min	Max	Subgroup 11 T_C = -55°C Min	Max	Unit
		Test no.	12	13	14	15	16								
t_{PHL}	3003 (Fig.6)	158	OUT		5.0 V	GND	5.0 V	D3	13	300	18	420	13	300	ns
		159			"	"	"	D2	"	"	"	"	"	"	"
		160			"	"	"	D1	"	"	"	"	"	"	"
		161		OUT	"	5.0 V	"	D4	"	"	"	"	"	"	"
		162	OUT		"	GND	"	D3	"	"	"	"	"	"	"
		163			"	"	"	D2	"	"	"	"	"	"	"
		164			"	"	"	D1	"	"	"	"	"	"	"
		[illegible]		OUT	IN	"	"	D4	"	"	"	"	"	"	"
		166	OUT		"	"	"	D3	"	"	"	"	"	"	"
		167			"	"	"	D2	"	"	"	"	"	"	"
		168			"	"	"	D1	"	"	"	"	"	"	"
t_{PLH}		169		OUT	5.0 V	"	"	D4	"	"	"	"	"	"	"
		170	OUT		"	"	"	D3	"	"	"	"	"	"	"
		171			"	"	"	D2	"	"	"	"	"	"	"
		172			"	"	"	D1	"	"	"	"	"	"	"
		173		OUT	"	IN	"	D4	"	"	"	"	"	"	"
		174	OUT		"	GND	"	D3	"	"	"	"	"	"	"
		175			"	"	"	D2	"	"	"	"	"	"	"
		176			"	"	"	D1	"	"	"	"	"	"	"
		177		OUT	"	5.0 V	"	D4	"	"	"	"	"	"	"
		178	OUT		"	GND	"	D3	"	"	"	"	"	"	"
		179			"	"	"	D2	"	"	"	"	"	"	"
		180			"	"	"	D1	"	"	"	"	"	"	"
		181		OUT	IN	"	"	D4	"	"	"	"	"	"	"
		182	OUT		"	"	"	D3	"	"	"	"	"	"	"
		183			"	"	"	D2	"	"	"	"	"	"	"
		184			"	"	"	D1	"	"	"	"	"	"	"
t_{THL}	3004 (Fig.6)	185		OUT	5.0 V	"	"	D4	10	"	14	"	10	"	"
		186	OUT		"	"	"	D3	"	"	"	"	"	"	"
		187			"	"	"	D2	"	"	"	"	"	"	"
		188			"	"	"	D1	"	"	"	"	"	"	"
		189		OUT	"	IN	"	D4	"	"	"	"	"	"	"
		190	OUT		"	GND	"	D3	"	"	"	"	"	"	"
		191			"	"	"	D2	"	"	"	"	"	"	"
		192			"	"	"	D1	"	"	"	"	"	"	"
		193		OUT	"	5.0 V	"	D4	"	"	"	"	"	"	"
		194	OUT		"	GND	"	D3	"	"	"	"	"	"	"
		195			"	"	"	D2	"	"	"	"	"	"	"
		196			"	"	"	D1	"	"	"	"	"	"	"
		197		OUT	IN	"	"	D4	"	"	"	"	"	"	"
		198	OUT		"	"	"	D3	"	"	"	"	"	"	"
		199			"	"	"	D2	"	"	"	"	"	"	"
		200			"	"	"	D1	"	"	"	"	"	"	"
t_{TLH}		201		OUT	5.0 V	"	"	D4	"	"	"	"	"	"	"
		202	OUT		"	"	"	D3	"	"	"	"	"	"	"
		203			"	"	"	D2	"	"	"	"	"	"	"
		204			"	"	"	D1	"	"	"	"	"	"	"
		205		OUT	"	IN	"	D4	"	"	"	"	"	"	"
		206	OUT		"	GND	"	D3	"	"	"	"	"	"	"
		207			"	"	"	D2	"	"	"	"	"	"	"
		208			"	"	"	D1	"	"	"	"	"	"	"
		209		OUT	"	5.0 V	"	D4	"	"	"	"	"	"	"
		210	OUT		"	GND	"	D3	"	"	"	"	"	"	"
		211			"	"	"	D2	"	"	"	"	"	"	"
		212			"	"	"	D1	"	"	"	"	"	"	"
		213		OUT	IN	"	"	D4	"	"	"	"	"	"	"
		214	OUT		"	"	"	D3	"	"	"	"	"	"	"
		215			"	"	"	D2	"	"	"	"	"	"	"
		216			"	"	"	D1	"	"	"	"	"	"	"

3/ The V_{IL} and V_{IH} input test requirements are acceptable if the output state limit is met, attributes data required.

4/ The device manufacturer may, at his option, measure I_{IL} and I_{IH} at +25°C for each individual input or measure all inputs together.

5/ See 4.4.1c.

TABLE III. Group A inspection for device type 53.

Symbol	MIL-STD-883 method	Cases A, C, D, X, Y Symbol	Terminal conditions 1A	1B	1Y	2Y	2A	2B	V_{SS}	3A	3B	3Y	4Y
		Test no.	1	2	3	4	5	6	7	8	9	10	11
$V_{IC(POS)}$		1	1 mA										
		2		1 mA									
		3					1 mA						
		4						1 mA					
		5								1 mA			
		6									1 mA		
		7											
		8											
$V_{IC(NEG)}$		9	-1 mA						GND				
		10		-1 mA					"				
		11					-1 mA		"				
		12						-1 mA	"				
		13							"	-1 mA			
		14							"		-1 mA		
		15							"				
		16							"				
I_{SS} 2/	3005	17	GND	GND			GND	GND	"	GND	GND		
		18	GND	18.0 V			GND	18.0 V	"	GND	18.0 V		
		19	18.0 V	GND			18.0 V	GND	"	18.0 V	GND		
		20	18.0 V	18.0 V			18.0 V	18.0 V	"	18.0 V	18.0 V		
V_{OH5}	3006	21	15.0 V	GND			GND	GND	"	GND	GND		
		22	GND	15.0 V			GND	"	"	"	"		
		23	"	GND			15.0 V	"	"	"	"		
		24	"	"			GND	15.0 V	"	"	"		
		25	"	"			"	GND	"	15.0 V	"		
		26	"	"			"	"	"	GND	15.0 V		
		27	"	"			"	"	"	"	GND		
		28	"	"			"	"	"	"	"		
V_{OL6}	3007	29	15.0 V	15.0 V			"	"	"	"	"		
		30	GND	GND			"	"	"	"	"		
		31	"	"			15.0 V	15.0 V	"	"	"		
		32	"	"			GND	GND	"	"	"		
		33	"	"			"	"	"	15.0 V	15.0 V		
		34	"	"			"	"	"	GND	GND		
		35	"	"			"	"	"	"	"		
		36	"	"			"	"	"	"	"		
V_{IH1} 3/		37	3.5 V	1.5 V			"	"	"	"	"		
		38	1.5 V	3.5 V			"	"	"	"	"		
		39	GND	GND			3.5 V	1.5 V	"	"	"		
		40	"	"			1.5 V	3.5 V	"	"	"		
		41	"	"			GND	GND	"	3.5 V	1.5 V		
		42	"	"			"	"	"	1.5 V	3.5 V		
		43	"	"			"	"	"	GND	GND		
		44	"	"			"	"	"	"	"		
V_{IH2} 3/		45	7.0 V	3.0 V			"	"	"	"	"		
		46	3.0 V	7.0 V			"	"	"	"	"		
		47	GND	GND			7.0 V	3.0 V	"	"	"		
		48	"	"			3.0 V	7.0 V	"	"	"		
		49	"	"			GND	GND	"	7.0 V	3.0 V		
		50	"	"			"	"	"	3.0 V	7.0 V		
		51	"	"			"	"	"	GND	GND		
		52	"	"			"	"	"	GND	GND		

See footnotes at end of device type 53.

TABLE III. Group A inspection for device type 53 - Continued.

Symbol	MIL-STD-883 method	Cases A, C, D, X, Y Symbol	Terminal conditions 1/ 4A	4B	V_{DD}	Measured terminal	Test limits Subgroup 1 T_C = +25°C Min	Max	Subgroup 2 T_C = +125°C Min	Max	Subgroup 3 T_C = -55°C Min	Max	Unit
		Test no.	12	13	14								
$V_{IC(POS)}$		1			GND	1A		1.5					V
		2			"	1B		"					"
		3			"	2A		"					"
		4			"	2B		"					"
		5			"	3A		"					"
		6			"	3B		"					"
		7	1 mA		"	4A		"					"
		8		1 mA	"	4B		"					"
$V_{IC(NEG)}$		9				1A		-6					"
		10				1B		"					"
		11				2A		"					"
		12				2B		"					"
		13				3A		"					"
		14				3B		"					"
		15	-1 mA			4A		"					"
		16		-1 mA		4B		"					"
I_{SS} 2/	3005	17	GND	GND	18.0 V	V_{SS}		-25		-750			nA
		18	GND	18.0 V	"	"		"		"			"
		19	18.0 V	GND	"	"		"		"			"
		20	18.0 V	18.0 V	"	"		"		"			"
V_{OH5}	3006	21	GND	GND	15.0 V	1Y	14.95		14.95		14.95		V
		22	"	"	"	1Y	"		"		"		"
		23	"	"	"	2Y	"		"		"		"
		24	"	"	"	2Y	"		"		"		"
		25	"	"	"	3Y	"		"		"		"
		26	"	"	"	3Y	"		"		"		"
		27	15.0 V	"	"	4Y	"		"		"		"
		28	GND	15.0 V	"	4Y	"		"		"		"
V_{OL6}	3007	29	"	GND	"	1Y		0.05		0.05		0.05	"
		30	"	"	"	1Y		"		"		"	"
		31	"	"	"	2Y		"		"		"	"
		32	"	"	"	2Y		"		"		"	"
		33	"	"	"	3Y		"		"		"	"
		34	"	"	"	3Y		"		"		"	"
		35	15.0 V	15.0 V	"	4Y		"		"		"	"
		36	GND	GND	"	4Y		"		"		"	"
V_{IH1} 3/		37	"	"	5.0 V	1Y	4.5		4.5		4.5		"
		38	"	"	"	1Y	"		"		"		"
		39	"	"	"	2Y	"		"		"		"
		40	"	"	"	2Y	"		"		"		"
		41	"	"	"	3Y	"		"		"		"
		42	"	"	"	3Y	"		"		"		"
		43	3.5 V	1.5 V	"	4Y	"		"		"		"
		44	1.5 V	3.5 V	"	4Y	"		"		"		"
V_{IH2} 3/		45	GND	GND	10.0 V	1Y	9.0		9.0		9.0		"
		46	"	"	"	1Y	"		"		"		"
		47	"	"	"	2Y	"		"		"		"
		48	"	"	"	2Y	"		"		"		"
		49	"	"	"	3Y	"		"		"		"
		50	"	"	"	3Y	"		"		"		"
		51	7.0 V	3.0 V	"	4Y	"		"		"		"
		52	3.0 V	7.0 V	"	4Y	"		"		"		"

TABLE III. Group A inspection for device type 53 - Continued.

Symbol	MIL-STD-883 method	Cases A, C, D, X, Y Symbol	Terminal conditions 1A	1B	1Y	2Y	2A	2B	V_{SS}	3A	3B	3Y	4Y
		Test no.	1	2	3	4	5	6	7	8	9	10	11
V_{IH3} 3/		53	11.0 V	4.0 V			GND	GND	GND	GND	GND		
		54	4.0 V	11.0 V			GND	GND	"	"	"		
		55	GND	GND			11.0 V	4.0 V	"	"	"		
		56	"	"			4.0 V	11.0 V	"	"	"		
		57	"	"			GND	GND	"	11.0 V	4.0 V		
		58	"	"			"	"	"	4.0 V	11.0 V		
		59	"	"			"	"	"	GND	GND		
		60	"	"			"	"	"	"	"		
V_{IL1} 3/		61	1.5 V	"			"	"	"	"	"		
		62	GND	"			1.5 V	"	"	"	"		
		63	"	"			GND	"	"	1.5 V	"		
		64	"	"			"	"	"	GND	"		
V_{IL2} 3/		65	3.0 V	"			"	"	"	"	"		
		66	GND	"			3.0 V	"	"	"	"		
		67	"	"			GND	"	"	3.0 V	"		
		68	"	"			"	"	"	GND	"		
V_{IL3} 3/		69	4.0 V	"			"	"	"	"	"		
		70	GND	"			4.0 V	"	"	"	"		
		71	"	"			GND	"	"	4.0 V	"		
		72	"	"			"	"	"	GND	"		
I_{OL1}		73	"	"	0.4 V		"	"	"	"	"		
		74	"	"		0.4 V	"	"	"	"	"		
		75	"	"			"	"	"	"	"	0.4 V	
		76	"	"			"	"	"	"	"		0.4 V
I_{OL2}		77	"	"	1.5 V		"	"	"	"	"		
		78	"	"		1.5 V	"	"	"	"	"		
		79	"	"			"	"	"	"	"	1.5 V	
		80	"	"			"	"	"	"	"		1.5 V
I_{OH1}		81	5.0 V	"	4.6 V		5.0 V	"	"	5.0 V	"		
		82	"	"		4.6 V	"	"	"	"	"		
		83	"	"			"	"	"	"	"	4.6 V	
		84	"	"			"	"	"	"	"		4.6 V
I_{OH2}		85	15.0 V	"	13.5 V		15.0 V	"	"	15.0 V	"		
		86	"	"		13.5 V	"	"	"	"	"		
		87	"	"			"	"	"	"	"	13.5 V	
		88	"	"			"	"	"	"	"		13.5 V
I_{IH1} 4/	3010	89	18.0 V	18.0 V			18.0 V	18.0 V	"	18.0 V	18.0 V		
I_{IH2}		90	18.0 V	GND			GND	GND	"	GND	GND		
		91	GND	18.0 V			GND	"	"	"	"		
		92	"	GND			18.0 V	"	"	"	"		
		93	"	"			GND	18.0 V	"	"	"		
		94	"	"			"	GND	"	18.0 V	"		
		95	"	"			"	"	"	GND	18.0 V		
		96	"	"			"	"	"	"	GND		
		97	"	"			"	"	"	"	"		
I_{IL1} 4/	3009	98	"	"			"	"	"	"	"		

See footnotes at end of device type 53.

TABLE III. Group A inspection for device type 53 - Continued.

Symbol	MIL-STD-883 method	Cases A, C, D, X, Y Symbol	Terminal conditions 1/ 4A	4B	V_{DD}	Measured terminal	Test limits Subgroup 1 T_C = +25°C Min	Max	Subgroup 2 T_C = +125°C Min	Max	Subgroup 3 T_C = -55°C Min	Max	Unit
		Test no.	12	13	14								
V_{IH3} 3/		53	GND	GND	15.0 V	1Y	13.5		13.5		13.5		V
		54	"	"	"	1Y	"		"		"		"
		55	"	"	"	2Y	"		"		"		"
		56	"	"	"	2Y	"		"		"		"
		57	"	"	"	3Y	"		"		"		"
		58	"	"	"	3Y	"		"		"		"
		59	11.0 V	4.0 V	"	4Y	"		"		"		"
		60	4.0 V	11.0 V	"	4Y	"		"		"		"
V_{IL1} 3/		61	GND	GND	5.0 V	1Y		0.5		0.5		0.5	"
		62	"	"	"	2Y		"		"		"	"
		63	"	"	"	3Y		"		"		"	"
		64	1.5 V	"	"	4Y		"		"		"	"
V_{IL2} 3/		65	GND	"	10.0 V	1Y		1.0		1.0		1.0	"
		66	"	"	"	2Y		"		"		"	"
		67	"	"	"	3Y		"		"		"	"
		68	3.0 V	"	"	4Y		"		"		"	"
V_{IL3} 3/		69	GND	"	15.0 V	1Y		1.5		1.5		1.5	"
		70	"	"	"	2Y		"		"		"	"
		71	"	"	"	3Y		"		"		"	"
		72	4.0 V	"	"	4Y		"		"		"	"
I_{OL1}		73	GND	"	5.0 V	1Y	0.51		0.36		0.64		mA
		74	"	"	"	2Y	"		"		"		"
		75	"	"	"	3Y	"		"		"		"
		76	"	"	"	4Y	"		"		"		"
I_{OL2}		77	"	"	15.0 V	1Y	3.4		2.4		4.2		"
		78	"	"	"	2Y	"		"		"		"
		79	"	"	"	3Y	"		"		"		"
		80	"	"	"	4Y	"		"		"		"
I_{OH1}		81	5.0 V	"	5.0 V	1Y	-0.51		-0.36		-0.64		"
		82	"	"	"	2Y	"		"		"		"
		83	"	"	"	3Y	"		"		"		"
		84	"	"	"	4Y	"		"		"		"
I_{OH2}		85	15.0 V	"	15.0 V	1Y	-3.4		-2.4		-4.2		"
		86	"	"	"	2Y	"		"		"		"
		87	"	"	"	3Y	"		"		"		"
		88	"	"	"	4Y	"		"		"		"
I_{IH1} 4/	3010	89	18.0 V	18.0 V	18.0 V	All inputs together		8					nA
I_{IH2}		90	GND	GND	"	1A		1		45			"
		91	"	"	"	1B		"		"			"
		92	"	"	"	2A		"		"			"
		93	"	"	"	2B		"		"			"
		94	"	"	"	3A		"		"			"
		95	"	"	"	3B		"		"			"
		96	18.0 V	"	"	4A		"		"			"
		97	GND	18.0 V	"	4B		"		"			"
I_{IL1} 4/	3009	98	GND	GND	"	All inputs together		-8					"

TABLE III. Group A inspection for device type 53 - Continued.

Symbol	MIL-STD-883 method	Cases A, C, D, X, Y Symbol	Terminal conditions 1A	1B	1Y	2Y	2A	2B	V_{SS}	3A	3B	3Y	4Y
		Test no.	1	2	3	4	5	6	7	8	9	10	11
I_{IL2}	3009	99	GND	18.0 V			18.0 V	18.0 V	GND	18.0 V	18.0 V		
		100	18.0 V	GND			18.0 V	"	"	"	"		
		101	"	18.0 V			GND	"	"	"	"		
		102	"	"			18.0 V	GND	"	"	"		
		103	"	"			"	18.0 V	"	GND	"		
		104	"	"			"	"	"	18.0 V	GND		
		105	"	"			"	"	"	"	18.0 V		
		106	"	"			"	"	"	"	18.0 V		
C_I	3012	107	5/	5/			5/	5/	GND	5/	5/		
		108							"				
		109							"				
		110							"				
		111							"				
		112							"				
		113							"				
		114							"				
t_{PHL}	3003 (Fig.6)	115	IN	GND	OUT	OUT	GND	GND	GND	GND	GND	OUT	OUT
		116	GND	IN	OUT	OUT	GND	"	"	"	"	OUT	OUT
		117	"	GND			IN	"	"	"	"		
		118	"	"			GND	IN	"	"	"		
		119	"	"			"	GND	"	IN	IN		
		120	"	"			"	"	"	GND	GND		
		121	"	"			"	"	"	"	"		
		122	"	"			"	"	"	"	"		
t_{PLH}		123	IN	"	OUT	OUT	"	"	"	"	"	OUT	OUT
		124	GND	IN	OUT	OUT	"	"	"	"	"	OUT	OUT
		125	"	GND			IN	"	"	"	"		
		126	"	"			GND	"	"	"	"		
		127	"	"			"	IN	"	"	"		
		128	"	"			"	GND	"	IN	"		
		129	"	"			"	"	"	GND	IN		
		130	"	"			"	"	"	"	GND		
t_{THL}	3004 (Fig.6)	131	IN	"	OUT	OUT	"	"	"	"	"	OUT	OUT
		132	GND	IN	OUT	OUT	"	"	"	"	"	OUT	OUT
		133	"	GND			IN	"	"	"	"		
		134	"	"			GND	"	"	"	"		
		135	"	"			"	IN	"	"	"		
		136	"	"			"	GND	"	IN	"		
		137	"	"			"	"	"	GND	IN		
		138	"	"			"	"	"	"	GND		
t_{TLH}		139	IN	"	OUT	OUT	"	"	"	"	"	OUT	OUT
		140	GND	IN	OUT	OUT	"	"	"	"	"	OUT	OUT
		141	"	GND			IN	"	"	"	"		
		142	"	"			GND	"	"	"	"		
		143	"	"			"	IN	"	"	"		
		144	"	"			"	GND	"	IN	"		
		145	"	"			"	"	"	GND	IN		
		146	"	"			"	"	"	"	GND		

1/ Pins not designated may be "high" level logic, "low" level logic, or open. Exceptions are as follows: For $V_{IC(POS)}$ tests, the V_{SS} terminal shall be open; for $V_{IC(NEG)}$ tests, the V_{DD} terminal shall be open; for I_{SS} tests, the outputs shall be open.

2/ I_{SS} measurements shall be performed in sequence.

TABLE III. Group A inspection for device type 53 - Continued.

Symbol	MIL-STD-883 method	Cases A, C, D, X, Y Symbol	Terminal conditions 1/ 4A	4B	V_{DD}	Measured terminal	Test limits Subgroup 1 T_C = +25°C Min	Max	Subgroup 2 T_C = +125°C Min	Max	Subgroup 3 T_C = -55°C Min	Max	Unit
		Test no.	12	13	14								
I_{IL2}	3009	99	18.0 V	18.0 V	18.0 V	1A		-1		-45			nA
		100	"	"	"	1B		"		"			"
		101	"	"	"	2A		"		"			"
		102	"	"	"	2B		"		"			"
		103	"	"	"	3A		"		"			"
		104	"	"	"	3B		"		"			"
		105	GND	"	"	4A		"		"			"
		106	18.0 V	GND	"	4B		"		"			"
							Subgroup 4 T_C = +25°C Min	Max					
C_I	3012	107			GND	1A		12					pF
		108			"	1B		"					"
		109			"	2A		"					"
		110			"	2B		"					"
		111			"	3A		"					"
		112			"	3B		"					"
		113	5/		"	4A		"					"
		114		5/	"	4B		"					"
							Subgroup 9 T_C = +25°C Min	Max	Subgroup 10 T_C = +125°C Min	Max	Subgroup 11 T_C = -55°C Min	Max	
t_{PHL}	3003 (Fig.6)	115	GND	GND	5.0 V	1A to 1Y	10	250	14	350	10	250	ns
		116	"	"	"	1B to 1Y	"	"	"	"	"	"	"
		117	"	"	"	2A to 2Y	"	"	"	"	"	"	"
		118	"	"	"	2B to 2Y	"	"	"	"	"	"	"
		119	"	"	"	3A to 3Y	"	"	"	"	"	"	"
		120	"	"	"	3B to 3Y	"	"	"	"	"	"	"
		121	IN	"	"	4A to 4Y	"	"	"	"	"	"	"
		122	GND	IN	"	4B to 4Y	"	"	"	"	"	"	"
t_{PLH}		123	"	GND	"	1A to 1Y	"	"	"	"	"	"	"
		124	"	"	"	1B to 1Y	"	"	"	"	"	"	"
		125	"	"	"	2A to 2Y	"	"	"	"	"	"	"
		126	"	"	"	2B to 2Y	"	"	"	"	"	"	"
		127	"	"	"	3A to 3Y	"	"	"	"	"	"	"
		128	"	"	"	3B to 3Y	"	"	"	"	"	"	"
		129	IN	"	"	4A to 4Y	"	"	"	"	"	"	"
		130	GND	IN	"	4B to 4Y	"	"	"	"	"	"	"
t_{THL}	3004 (Fig.6)	131	"	GND	"	1Y	10	200	14	280	10	200	"
		132	"	"	"	1Y	"	"	"	"	"	"	"
		133	"	"	"	2Y	"	"	"	"	"	"	"
		134	"	"	"	2Y	"	"	"	"	"	"	"
		135	"	"	"	3Y	"	"	"	"	"	"	"
		136	"	"	"	3Y	"	"	"	"	"	"	"
		137	IN	"	"	4Y	"	"	"	"	"	"	"
		138	GND	IN	"	4Y	"	"	"	"	"	"	"
t_{TLH}		139	"	GND	"	1Y	"	"	"	"	"	"	"
		140	"	"	"	1Y	"	"	"	"	"	"	"
		141	"	"	"	2Y	"	"	"	"	"	"	"
		142	"	"	"	2Y	"	"	"	"	"	"	"
		143	"	"	"	3Y	"	"	"	"	"	"	"
		144	"	"	"	3Y	"	"	"	"	"	"	"
		145	IN	"	"	4Y	"	"	"	"	"	"	"
		146	GND	IN	"	4Y	"	"	"	"	"	"	"

3/ The V_{IL} and V_{IH} input test requirements are acceptable, if the output state limit is met, attributes data required.

4/ The device manufacturer may, at his option, measure I_{IL} and I_{IH} at +25°C for each individual input or measure all inputs together.

5/ See 4.4.1c.

TABLE III. Group A inspection for device type 54.

Symbol	MIL-STD-883 method	Cases E, F, Z Symbol	Terminal conditions J	Kd	H	G	F	E	Kb	V_{SS}	Kc	Ka	D
		Test no.	1	2	3	4	5	6	7	8	9	10	11
$V_{IC(POS)}$		1		1 mA									
		2			1 mA								
		3				1 mA							
		4					1 mA						
		5						1 mA					
		6							1 mA				
		7									1 mA		
		8										1 mA	
		9											1 mA
		10											
		11											
		12											
		13											
$V_{IC(NEG)}$		14		-1 mA						GND			
		15			-1 mA					"			
		16				-1 mA				"			
		17					-1 mA			"			
		18						-1 mA		"			
		19							-1 mA	"			
		20								"	-1 mA		
		21								"		-1 mA	
		22								"			-1 mA
		23								"			
		24								"			
		25								"			
		26								"			
I_{SS} 2/	3005	27		GND	GND	GND	GND	GND	GND	"	GND	GND	GND
		28		18.0 V	GND	GND	GND	GND	18.0 V	"	18.0 V	18.0 V	GND
		29		GND	18.0 V	18.0 V	18.0 V	18.0 V	GND	"	GND	GND	18.0 V
		30		18.0 V	18.0 V	18.0 V	18.0 V	18.0 V	18.0 V	"	18.0 V	18.0 V	18.0 V
V_{OH5}	3006	31		15.0 V	GND	GND	GND	GND	GND	"	GND	GND	GND
		32		"	GND	GND	GND	GND	"	"	15.0 V	15.0 V	GND
V_{OL6}	3007	33		"	15.0 V	15.0 V	15.0 V	15.0 V	"	"	GND	GND	15.0 V
		34		"	15.0 V	15.0 V	15.0 V	15.0 V	"	"	15.0 V	15.0 V	15.0 V
V_{IH1}		35		3.5 V	3.5 V	1.5 V	1.5 V	1.5 V	1.5 V	"	1.5 V	1.5 V	1.5 V
		36		"	1.5 V	3.5 V	1.5 V	"	"	"	"	"	"
		37		"	"	1.5 V	3.5 V	"	"	"	"	"	"
		38		"	"	"	1.5 V	3.5 V	"	"	"	"	"
		39		"	"	"	"	1.5 V	"	"	"	"	3.5 V
		40		"	"	"	"	"	"	"	"	"	1.5 V
		41		"	"	"	"	"	"	"	"	"	"
		42		"	"	"	"	"	"	"	"	"	"
		43		"	3.5 V	3.5 V	3.5 V	3.5 V	"	"	3.5 V	3.5 V	3.5 V
V_{IH2}		44		7.0 V	7.0 V	3.0 V	3.0 V	3.0 V	3.0 V	"	3.0 V	3.0 V	3.0 V
		45		"	3.0 V	7.0 V	3.0 V	"	"	"	"	"	"
		46		"	"	3.0 V	7.0 V	"	"	"	"	"	"
		47		"	"	"	3.0 V	7.0 V	"	"	"	"	"
		48		"	"	"	"	3.0 V	"	"	"	"	7.0 V
		49		"	"	"	"	"	"	"	"	"	3.0 V
		50		"	"	"	"	"	"	"	"	"	"
		51		"	"	"	"	"	"	"	"	"	"
		52		"	7.0 V	7.0 V	7.0 V	7.0 V	"	"	7.0 V	7.0 V	7.0 V

See footnotes at end of device type 54.

TABLE III. Group A inspection for device type 54 - Continued.

Symbol	MIL-STD-883 method	Cases E, F, Z Symbol	Terminal conditions 1/ C	B	A	EX	V_{DD}	Measured terminal	Test limits Subgroup 1 T_C = +25°C Min	Max	Subgroup 2 T_C = +125°C Min	Max	Subgroup 3 T_C = -55°C Min	Max	Unit
		Test no.	12	13	14	15	16								
$V_{IC(POS)}$		1					GND	Kd		1.5					V
		2						H		"					"
		3						G		"					"
		4						F		"					"
		5						E		"					"
		6						Kb		"					"
		7						Kc		"					"
		8						Ka		"					"
		9						D		"					"
		10	1 mA					C		"					"
		11		1 mA				B		"					"
		12			1 mA			A		"					"
		13				1 mA		EX		"					"
$V_{IC(NEG)}$		14						Kd		-6.0					"
		15						H		"					"
		16						G		"					"
		17						F		"					"
		18						E		"					"
		19						Kb		"					"
		20						Kc		"					"
		21						Ka		"					"
		22						D		"					"
		23	-1 mA					C		"					"
		24		-1 mA				B		"					"
		25			-1 mA			A		"					"
		26				-1 mA		EX		"					"
I_{SS} 2/	3005	27	GND	GND	GND	GND	18.0 V	V_{SS}		-1.9		-3			μA
		28	GND	GND	GND	GND	"	"		"		"			"
		29	18.0 V	18.0 V	18.0 V	18.0 V	"	"		"		"			"
		30	18.0 V	18.0 V	18.0 V	18.0 V	"	"		"		"			"
V_{OH5}	3006	31	GND	GND	GND	GND	15.0 V	J	14.95		14.95		14.95		V
		32	GND	GND	GND	"	"	"	14.95		14.95		14.95		"
V_{OL6}	3007	33	15.0 V	15.0 V	15.0 V	"	"	"		0.05		0.05		0.05	"
		34	15.0 V	15.0 V	15.0 V	"	"	"		0.05		0.05		0.05	"
V_{IH1}		35	1.5 V	1.5 V	1.5 V	"	5.0 V	"	0.5		0.5		0.5		"
		36	"	"	"	"	"	"	"		"		"		"
		37	"	"	"	"	"	"	"		"		"		"
		38	"	"	"	"	"	"	"		"		"		"
		39	"	"	"	"	"	"	"		"		"		"
		40	3.5 V	"	"	"	"	"	"		"		"		"
		41	1.5 V	3.5 V	"	"	"	"	"		"		"		"
		42	1.5 V	1.5 V	3.5 V	"	"	"	"		"		"		"
		43	3.5 V	3.5 V	3.5 V	"	"	"	"		"		"		"
V_{IH2}		44	3.0 V	3.0 V	3.0 V	"	10.0 V	"	1.0		1.0		1.0		"
		45	"	"	"	"	"	"	"		"		"		"
		46	"	"	"	"	"	"	"		"		"		"
		47	"	"	"	"	"	"	"		"		"		"
		48	"	"	"	"	"	"	"		"		"		"
		49	7.0 V	"	"	"	"	"	"		"		"		"
		50	3.0 V	7.0 V	"	"	"	"	"		"		"		"
		51	3.0 V	3.0 V	7.0 V	"	"	"	"		"		"		"
		52	7.0 V	7.0 V	7.0 V	"	"	"	"		"		"		"

TABLE III. Group A inspection for device type 54 - Continued.

Symbol	MIL-STD-883 method	Cases E, F, Z Symbol	Terminal conditions J	Kd	H	G	F	E	Kb	V_{SS}	Kc	Ka	D
		Test no.	1	2	3	4	5	6	7	8	9	10	11
V_{IH3}		53		11.0 V	11.0 V	4.0 V	4.0 V	4.0 V	4.0 V	GND	4.0 V	4.0 V	4.0 V
		54		"	4.0 V	11.0 V	4.0 V	"	"	"	"	"	"
		55		"	"	4.0 V	11.0 V	"	"	"	"	"	"
		56		"	"	"	4.0 V	11.0 V	"	"	"	"	"
		57		"	"	"	"	4.0 V	"	"	"	"	11.0 V
		58		"	"	"	"	"	"	"	"	"	4.0 V
		59		"	"	"	"	"	"	"	"	"	"
		60		"	"	"	"	"	"	"	"	"	"
		61		"	11.0 V	11.0 V	11.0 V	11.0 V	"	"	11.0 V	11.0 V	11.0 V
V_{IL1}		62		3.5 V	1.5 V	1.5 V	1.5 V	1.5 V	1.5 V	"	1.5 V	1.5 V	1.5 V
		63		"	1.5 V	3.5 V	3.5 V	3.5 V	"	"	3.5 V	3.5 V	3.5 V
		64		"	3.5 V	1.5 V	3.5 V	"	"	"	"	"	"
		65		"	"	3.5 V	1.5 V	"	"	"	"	"	"
		66		"	"	"	3.5 V	1.5 V	"	"	"	"	"
		67		"	"	"	"	3.5 V	"	"	"	"	1.5 V
		68		"	"	"	"	"	"	"	"	"	3.5 V
		69		"	"	"	"	"	"	"	"	"	"
		70		"	"	"	"	"	"	"	"	"	"
V_{IL2}		71		7.0 V	3.0 V	3.0 V	3.0 V	3.0 V	3.0 V	"	3.0 V	3.0 V	3.0 V
		72		"	3.0 V	7.0 V	7.0 V	7.0 V	"	"	7.0 V	7.0 V	7.0 V
		73		"	7.0 V	3.0 V	7.0 V	"	"	"	"	"	"
		74		"	"	7.0 V	3.0 V	"	"	"	"	"	"
		75		"	"	"	7.0 V	3.0 V	"	"	"	"	"
		76		"	"	"	"	7.0 V	"	"	"	"	3.0 V
		77		"	"	"	"	"	"	"	"	"	7.0 V
		78		"	"	"	"	"	"	"	"	"	"
		79		"	"	"	"	"	"	"	"	"	"
V_{IL3}		80		11.0 V	4.0 V	4.0 V	4.0 V	4.0 V	4.0 V	"	4.0 V	4.0 V	4.0 V
		81		"	4.0 V	11.0 V	11.0 V	11.0 V	"	"	11.0 V	11.0 V	11.0 V
		82		"	11.0 V	4.0 V	11.0 V	"	"	"	"	"	"
		83		"	"	11.0 V	4.0 V	"	"	"	"	"	"
		84		"	"	"	11.0 V	4.0 V	"	"	"	"	"
		85		"	"	"	"	11.0 V	"	"	"	"	4.0 V
		86		"	"	"	"	"	"	"	"	"	11.0 V
		87		"	"	"	"	"	"	"	"	"	"
		88		"	"	"	"	"	"	"	"	"	"
I_{OL1}		89	0.4 V	5.0 V	5.0 V	GND	GND	GND	GND	"	GND	GND	GND
		90	"	"	GND	5.0 V	GND	"	"	"	"	"	"
		91	"	"	"	GND	5.0 V	"	"	"	"	"	"
		92	"	"	"	"	GND	5.0 V	"	"	"	"	"
		93	"	"	"	"	"	GND	"	"	"	"	5.0 V
		94	"	"	"	"	"	"	"	"	"	"	GND
		95	"	"	"	"	"	"	"	"	"	"	"
		96	"	"	"	"	"	"	"	"	"	"	"
		97	"	"	5.0 V	5.0 V	5.0 V	5.0 V	"	"	5.0 V	5.0 V	5.0 V
I_{OL2}		98	1.5 V	15.0 V	15.0 V	GND	GND	GND	"	"	GND	GND	GND
		99	"	"	GND	15.0 V	GND	"	"	"	"	"	"
		100	"	"	"	GND	15.0 V	"	"	"	"	"	"
		101	"	"	"	"	GND	15.0 V	"	"	"	"	"
		102	"	"	"	"	"	GND	"	"	"	"	15.0 V
		103	"	"	"	"	"	"	"	"	"	"	GND
		104	"	"	"	"	"	"	"	"	"	"	"
		105	"	"	"	"	"	"	"	"	"	"	"
		106	"	"	15.0 V	15.0 V	15.0 V	15.0 V	"	"	15.0 V	15.0 V	15.0 V

See footnotes at end of device type 54.

TABLE III. Group A inspection for device type 54 - Continued.

Symbol	MIL-STD-883 method	Cases E, F, Z Symbol	Terminal conditions 1/ C	B	A	EX	V_{DD}	Measured terminal	Test limits Subgroup 1 T_C = +25°C Min	Max	Subgroup 2 T_C = +125°C Min	Max	Subgroup 3 T_C = -55°C Min	Max	Unit
		Test no.	12	13	14	15	16								
V_{IH3}		53	4.0 V	4.0 V	4.0 V	GND	15.0 V	J	1.5		1.5		1.5		V
		54	"	"	"	"	"	"	"		"		"		"
		55	"	"	"	"	"	"	"		"		"		"
		56	"	"	"	"	"	"	"		"		"		"
		57	"	"	"	"	"	"	"		"		"		"
		58	11.0 V	"	"	"	"	"	"		"		"		"
		59	4.0 V	11.0 V	"	"	"	"	"		"		"		"
		60	4.0 V	4.0 V	11.0 V	"	"	"	"		"		"		"
		61	11.0 V	11.0 V	11.0 V	"	"	"	"		"		"		"
V_{IL1}		62	1.5 V	1.5 V	1.5 V	"	5.0 V	"		4.5		4.5		4.5	"
		63	3.5 V	3.5 V	3.5 V	"	"	"		"		"		"	"
		64	"	"	"	"	"	"		"		"		"	"
		65	"	"	"	"	"	"		"		"		"	"
		66	"	"	"	"	"	"		"		"		"	"
		67	"	"	"	"	"	"		"		"		"	"
		68	1.5 V	"	"	"	"	"		"		"		"	"
		69	3.5 V	1.5 V	"	"	"	"		"		"		"	"
		70	3.5 V	3.5 V	1.5 V	"	"	"		"		"		"	"
V_{IL2}		71	3.0 V	3.0 V	3.0 V	"	10.0 V	"		9.0		9.0		9.0	"
		72	7.0 V	7.0 V	7.0 V	"	"	"		"		"		"	"
		73	"	"	"	"	"	"		"		"		"	"
		74	"	"	"	"	"	"		"		"		"	"
		75	"	"	"	"	"	"		"		"		"	"
		76	"	"	"	"	"	"		"		"		"	"
		77	3.0 V	"	"	"	"	"		"		"		"	"
		78	7.0 V	3.0 V	"	"	"	"		"		"		"	"
		79	7.0 V	7.0 V	3.0 V	"	"	"		"		"		"	"
V_{IL3}		80	4.0 V	4.0 V	4.0 V	"	15.0 V	"		13.5		13.5		13.5	"
		81	11.0 V	11.0 V	11.0 V	"	"	"		"		"		"	"
		82	"	"	"	"	"	"		"		"		"	"
		83	"	"	"	"	"	"		"		"		"	"
		84	"	"	"	"	"	"		"		"		"	"
		85	"	"	"	"	"	"		"		"		"	"
		86	4.0 V	"	"	"	"	"		"		"		"	"
		87	11.0 V	4.0 V	"	"	"	"		"		"		"	"
		88	11.0 V	11.0 V	4.0 V	"	"	"		"		"		"	"
I_{OL1}		89	GND	GND	GND	"	5.0 V	"	0.51		0.36		0.64		mA
		90	"	"	"	"	"	"	"		"		"		"
		91	"	"	"	"	"	"	"		"		"		"
		92	"	"	"	"	"	"	"		"		"		"
		93	"	"	"	"	"	"	"		"		"		"
		94	5.0 V	"	"	"	"	"	"		"		"		"
		95	GND	5.0 V	"	"	"	"	"		"		"		"
		96	GND	GND	5.0 V	"	"	"	"		"		"		"
		97	5.0 V	5.0 V	5.0 V	"	"	"	"		"		"		"
I_{OL2}		98	GND	GND	GND	"	15.0 V	"	3.4		2.4		4.2		"
		99	"	"	"	"	"	"	"		"		"		"
		100	"	"	"	"	"	"	"		"		"		"
		101	"	"	"	"	"	"	"		"		"		"
		102	"	"	"	"	"	"	"		"		"		"
		103	15.0 V	"	"	"	"	"	"		"		"		"
		104	GND	15.0 V	"	"	"	"	"		"		"		"
		105	GND	GND	15.0 V	"	"	"	"		"		"		"
		106	15.0 V	15.0 V	15.0 V	"	"	"	"		"		"		"

TABLE III. Group A inspection for device type 54 - Continued.

Symbol	MIL-STD-883 method	Cases E, F, Z	Terminal conditions										
		Symbol	J	Kd	H	G	F	E	Kb	V_{SS}	Kc	Ka	D
		Test no.	1	2	3	4	5	6	7	8	9	10	11
I_{OH1}		107	4.6 V	5.0 V	GND	GND	GND	GND	GND	GND	GND	GND	GND
		108	"	"	GND	5.0 V	5.0 V	5.0 V	"	"	5.0 V	5.0 V	5.0 V
		109	"	"	5.0 V	GND	5.0 V	"	"	"	"	"	"
		110	"	"	"	5.0 V	GND	"	"	"	"	"	"
		111	"	"	"	"	5.0 V	GND	"	"	"	"	"
		112	"	"	"	"	"	5.0 V	"	"	"	"	GND
		113	"	"	"	"	"	"	"	"	"	"	5.0 V
		114	"	"	"	"	"	"	"	"	"	"	"
		115	"	"	"	"	"	"	"	"	"	"	"
I_{OH2}		116	13.5 V	15.0 V	GND	GND	GND	GND	"	"	GND	GND	GND
		117	"	"	GND	15.0 V	15.0 V	15.0 V	"	"	15.0 V	15.0 V	15.0 V
		118	"	"	15.0 V	GND	15.0 V	"	"	"	"	"	"
		119	"	"	"	15.0 V	GND	"	"	"	"	"	"
		120	"	"	"	"	15.0 V	GND	"	"	"	"	"
		121	"	"	"	"	"	15.0 V	"	"	"	"	GND
		122	"	"	"	"	"	"	"	"	"	"	15.0 V
		123	"	"	"	"	"	"	"	"	"	"	"
		124	"	"	"	"	"	"	"	"	"	"	"
I_{IH1} 3/	3010	125		18.0 V	18.0 V	18.0 V	18.0 V	18.0 V	18.0 V	"	18.0 V	18.0 V	18.0 V
I_{IH2}		126		18.0 V	GND	GND	GND	GND	GND	"	GND	"	"
		127		GND	18.0 V	GND	"	"	"	"	"	"	"
		128		"	GND	18.0 V	"	"	"	"	"	"	"
		129		"	"	GND	18.0 V	"	"	"	"	"	"
		130		"	"	"	GND	18.0 V	"	"	"	"	"
		131		"	"	"	"	GND	18.0 V	"	"	"	"
		132		"	"	"	"	"	GND	"	18.0 V	"	"
		133		"	"	"	"	"	"	"	GND	18.0 V	"
		134		"	"	"	"	"	"	"	"	GND	18.0 V
		135		"	"	"	"	"	"	"	"	"	GND
		136		"	"	"	"	"	"	"	"	"	"
		137		"	"	"	"	"	"	"	"	"	"
		138		"	"	"	"	"	"	"	"	"	"
I_{IL1} 3/	3009	139		"	"	"	"	"	"	"	"	"	"
I_{IL2}		140		"	"	"	"	"	"	"	"	"	"
		141		"	"	"	"	"	"	"	"	"	"
		142		"	"	"	"	"	"	"	"	"	"
		143		"	"	"	"	"	"	"	"	"	"
		144		"	"	"	"	"	"	"	"	"	"
		145		"	"	"	"	"	"	"	"	"	"
		146		"	"	"	"	"	"	"	"	"	"
		147		"	"	"	"	"	"	"	"	"	"
		148		"	"	"	"	"	"	"	"	"	"
		149		"	"	"	"	"	"	"	"	"	"
		150		"	"	"	"	"	"	"	"	"	"
		151		"	"	"	"	"	"	"	"	"	"
		152		"	"	"	"	"	"	"	"	"	"
I_{OC1}		153	18.0 V	"	18.0 V	18.0 V	18.0 V	18.0 V	18.0 V	"	18.0 V	18.0 V	18.0 V
I_{OC2}		154	GND	"	18.0 V	18.0 V	18.0 V	18.0 V	18.0 V	"	18.0 V	18.0 V	18.0 V

See footnotes at end of device type 54.

TABLE III. Group A inspection for device type 54 - Continued.

Symbol	MIL-STD-883 method	Cases E, F, Z Symbol	Terminal conditions 1/ C	B	A	EX	V_{DD}	Measured terminal	Test limits Subgroup 1 T_C = +25°C Min	Max	Subgroup 2 T_C = +125°C Min	Max	Subgroup 3 T_C = -55°C Min	Max	Unit
		Test no.	12	13	14	15	16								
I_{OH1}		107	GND	GND	GND	GND	5.0 V	J	-0.51		-0.36		-0.64		mA
		108	5.0 V	5.0 V	5.0 V	"	"	"	"		"		"		"
		109	"	"	"	"	"	"	"		"		"		"
		110	"	"	"	"	"	"	"		"		"		"
		111	"	"	"	"	"	"	"		"		"		"
		112	"	"	"	"	"	"	"		"		"		"
		113	GND	"	"	"	"	"	"		"		"		"
		114	5.0 V	GND	"	"	"	"	"		"		"		"
		115	5.0 V	5.0 V	GND	"	"	"	"		"		"		"
I_{OH2}		116	GND	GND	GND	"	15.0 V	"	-3.4		-2.4		-4.2		"
		117	15.0 V	15.0 V	15.0 V	"	"	"	"		"		"		"
		118	"	"	"	"	"	"	"		"		"		"
		119	"	"	"	"	"	"	"		"		"		"
		120	"	"	"	"	"	"	"		"		"		"
		121	"	"	"	"	"	"	"		"		"		"
		122	GND	"	"	"	"	"	"		"		"		"
		123	15.0 V	GND	"	"	"	"	"		"		"		"
		124	15.0 V	15.0 V	GND	"	"	"	"		"		"		"
I_{IH1} 3/	3010	125	18.0 V	18.0 V	18.0 V	18.0 V	18.0 V	All inputs together		13					nA
I_{IH2}		126	GND	GND	GND	GND	"	Kd		1		45			"
		127	"	"	"	"	"	H		"		"			"
		128	"	"	"	"	"	G		"		"			"
		129	"	"	"	"	"	F		"		"			"
		130	"	"	"	"	"	E		"		"			"
		131	"	"	"	"	"	Kb		"		"			"
		132	"	"	"	"	"	Kc		"		"			"
		133	"	"	"	"	"	Ka		"		"			"
		134	"	"	"	"	"	D		"		"			"
		135	18.0 V	"	"	"	"	C		"		"			"
		136	GND	18.0 V	"	"	"	B		"		"			"
		137	"	GND	18.0 V	"	"	A		"		"			"
		138	"	"	GND	18.0 V	"	EX		"		"			"
I_{IL1} 3/	3009	139	"	"	"	GND	"	All inputs together		-13					"
I_{IL2}		140	"	"	"	"	"	Kd		-1.0		-45			"
		141	"	"	"	"	"	H		"		"			"
		142	"	"	"	"	"	G		"		"			"
		143	"	"	"	"	"	F		"		"			"
		144	"	"	"	"	"	E		"		"			"
		145	"	"	"	"	"	Kb		"		"			"
		146	"	"	"	"	"	Kc		"		"			"
		147	"	"	"	"	"	Ka		"		"			"
		148	"	"	"	"	"	D		"		"			"
		149	"	"	"	"	"	C		"		"			"
		150	"	"	"	"	"	B		"		"			"
		151	"	"	"	"	"	A		"		"			"
		152	"	"	"	"	"	EX		"		"			"
I_{OC1}		153	18.0 V	18.0 V	18.0 V	"	"	J		25		90		25	"
I_{OC2}		154	18.0 V	18.0 V	18.0 V	"	"	J		-25		-90		-25	"

TABLE III. Group A inspection for device type 54 - Continued.

Symbol	MIL-STD-883 method	Cases E, F, Z Symbol	Terminal conditions J	Kd	H	G	F	E	Kb	V_{SS}	Kc	Ka	D
		Test no.	1	2	3	4	5	6	7	8	9	10	11
C_I	3012	155		4/						GND			
		156			4/					"			
		157				4/				"			
		158					4/			"			
		159						4/		"			
		160							4/	"			
		161								"	4/		
		162								"		4/	
		163								"			4/
		164								"			
		165								"			
		166								"			
		167								"			
t_{PHL1}	3003 (Fig.7)	168	OJT	5.0 V	GND	GND	GND	GND	GND	GND	GND	GND	GND
		169	"	"	"	"	"	"	"	"	"	"	"
		170	"	"	"	"	"	"	"	"	"	"	"
		171	"	"	"	"	"	"	"	"	"	"	IN
		172	"	"	"	"	"	IN	"	"	"	"	GND
		173	"	"	"	"	IN	GND	"	"	"	"	"
		174	"	"	"	IN	GND	"	"	"	"	"	"
		175	"	"	IN	GND	"	"	"	"	"	"	"
t_{PLH1}		176	"	"	GND	"	"	"	"	"	"	"	"
		177	"	"	"	"	"	"	"	"	"	"	"
		178	"	"	"	"	"	"	"	"	"	"	"
		179	"	"	"	"	"	"	"	"	"	"	IN
		180	"	"	"	"	"	IN	"	"	"	"	GND
		181	"	"	"	"	IN	GND	"	"	"	"	"
		182	"	"	"	IN	GND	"	"	"	"	"	"
		183	"	"	IN	GND	"	"	"	"	"	"	"
t_{PHL2}	3003 (Fig.8)	184	"	"	GND	"	"	"	"	"	5.0 V	"	"
		185	"	"	"	"	"	"	"	"	"	"	"
		186	"	"	"	"	"	"	"	"	"	"	"
		187	"	"	"	"	"	"	"	"	"	"	IN
		188	"	"	"	"	"	IN	"	"	"	"	GND
		189	"	"	"	"	IN	GND	"	"	"	"	"
		190	"	"	"	IN	GND	"	"	"	"	"	"
		191	"	"	IN	GND	"	"	"	"	"	"	"
t_{PLH2}		192	"	"	GND	"	"	"	"	"	"	"	"
		193	"	"	"	"	"	"	"	"	"	"	"
		194	"	"	"	"	"	"	"	"	"	"	"
		195	"	"	"	"	"	"	"	"	"	"	IN
		196	"	"	"	"	"	IN	"	"	"	"	GND
		197	"	"	"	"	IN	GND	"	"	"	"	"
		198	"	"	"	IN	GND	"	"	"	"	"	"
		199	"	"	IN	GND	GND	"	"	"	"	"	"
t_{PHL3}	3003 (Fig.9)	200	"	"	5.0 V	5.0 V	5.0 V	5.0 V	"	"	GND	5.0 V	5.0 V
		201	"	"	"	"	"	"	"	"	"	"	"
		202	"	"	"	"	"	"	"	"	"	"	"
		203	"	"	"	"	"	"	"	"	"	"	IN
		204	"	"	"	"	"	IN	"	"	"	"	5.0 V
		205	"	"	"	"	IN	5.0 V	"	"	"	"	"
		206	"	"	"	IN	5.0 V	"	"	"	"	"	"
		207	"	"	IN	5.0 V	5.0 V	"	"	"	"	"	"

See footnotes at end of device type 54.

TABLE III. Group A inspection for device type 54 - Continued.

Symbol	MIL-STD-883 method	Cases E, F, Z Symbol	Terminal conditions 1/ C	B	A	EX	V_{DD}	Measured terminal	Test limits Subgroup 4 T_C = +25°C Min	Max					Unit
		Test no.	12	13	14	15	16								
C_I	3012	155					GND	Kd		12					pF
		156					"	H		"					"
		157					"	G		"					"
		158					"	F		"					"
		159					"	E		"					"
		160					"	Kb		"					"
		161					"	Kc		"					"
		162					"	Ka		"					"
		163					"	D		"					"
		164	4/				"	C		"					"
		165		4/			"	B		"					"
		166			4/		"	A		"					"
		167				4/	"	EX		"					"
									Subgroup 9 T_C = +25°C Min	Max	Subgroup 10 T_C = +125°C Min	Max	Subgroup 11 T_C = -55°C Min	Max	
t_{PHL1}	3003 (Fig.7)	168	GND	GND	IN	GND	5.0 V	A to J	34	685	41	820	30	600	ns
		169	GND	IN	GND	"	"	B to J	"	"	"	"	"	"	"
		170	IN	GND	"	"	"	C to J	"	"	"	"	"	"	"
		171	GND	"	"	"	"	D to J	"	"	"	"	"	"	"
		172	"	"	"	"	"	E to J	"	"	"	"	"	"	"
		173	"	"	"	"	"	F to J	"	"	"	"	"	"	"
		174	"	"	"	"	"	G to J	"	"	"	"	"	"	"
		175	"	"	"	"	"	H to J	"	"	"	"	"	"	"
t_{PLH1}		176	"	"	IN	"	"	A to J	27	535	32	640	24	475	"
		177	"	IN	GND	"	"	B to J	"	"	"	"	"	"	"
		178	IN	GND	"	"	"	C to J	"	"	"	"	"	"	"
		179	GND	"	"	"	"	D to J	"	"	"	"	"	"	"
		180	"	"	"	"	"	E to J	"	"	"	"	"	"	"
		181	"	"	"	"	"	F to J	"	"	"	"	"	"	"
		182	"	"	"	"	"	G to J	"	"	"	"	"	"	"
		183	"	"	"	"	"	H to J	"	"	"	"	"	"	"
t_{PHL2}	3003 (Fig.8)	184	"	"	IN	"	"	A to J	32	635	38	755	28	555	"
		185	"	IN	GND	"	"	B to J	"	"	"	"	"	"	"
		186	IN	GND	"	"	"	C to J	"	"	"	"	"	"	"
		187	GND	"	"	"	"	D to J	"	"	"	"	"	"	"
		188	"	"	"	"	"	E to J	"	"	"	"	"	"	"
		189	"	"	"	"	"	F to J	"	"	"	"	"	"	"
		190	"	"	"	"	"	G to J	"	"	"	"	"	"	"
		191	"	"	"	"	"	H to J	"	"	"	"	"	"	"
t_{PLH2}		192	"	"	IN	"	"	A to J	31	620	"	750	"	550	"
		193	"	IN	GND	"	"	B to J	"	"	"	"	"	"	"
		194	IN	GND	"	"	"	C to J	"	"	"	"	"	"	"
		195	GND	"	"	"	"	D to J	"	"	"	"	"	"	"
		196	"	"	"	"	"	E to J	"	"	"	"	"	"	"
		197	"	"	"	"	"	F to J	"	"	"	"	"	"	"
		198	"	"	"	"	"	G to J	"	"	"	"	"	"	"
		199	"	"	"	"	"	H to J	"	"	"	"	"	"	"
t_{PHL3}	3003 (Fig. 9)	200	5.0 V	5.0 V	IN	"	"	A to J	38	760	45	905	33	665	"
		201	GND	IN	5.0 V	"	"	B to J	"	"	"	"	"	"	"
		202	IN	5.0 V	"	"	"	C to J	"	"	"	"	"	"	"
		203	5.0 V	"	"	"	"	D to J	"	"	"	"	"	"	"
		204	"	"	"	"	"	E to J	"	"	"	"	"	"	"
		205	"	"	"	"	"	F to J	"	"	"	"	"	"	"
		206	"	"	"	"	"	G to J	"	"	"	"	"	"	"
		207	"	"	"	"	"	H to J	"	"	"	"	"	"	"

TABLE III. Group A inspection for device type 54 - Continued.

Symbol	MIL-STD-883 method	Cases E, F, Z Symbol	Terminal conditions J	Kd	H	G	F	E	Kb	V_{SS}	Kc	Ka	D
		Test no.	1	2	3	4	5	6	7	8	9	10	11
t_{PLH3}	3003 (Fig.9)	208	OUT	5.0 V	5.0 V	5.0 V	5.0 V	5.0 V	GND	GND	GND	5.0 V	5.0 V
		209	"	"	"	"	"	"	"	"	"	"	"
		210	"	"	"	"	"	"	"	"	"	"	"
		211	"	"	"	"	"	"	"	"	"	"	IN
		212	"	"	"	"	"	IN	"	"	"	"	5.0 V
		213	"	"	"	"	IN	5.0 V	"	"	"	"	"
		214	"	"	"	IN	5.0 V	"	"	"	"	"	"
		215	"	"	IN	5.0 V	"	"	"	"	"	"	"
t_{PHL4}	3003 (Fig.10)	216	"	"	5.0 V	"	"	"	"	"	5.0 V	"	"
		217	"	"	"	"	"	"	"	"	"	"	"
		218	"	"	"	"	"	"	"	"	"	"	"
		219	"	"	"	"	"	"	"	"	"	"	IN
		220	"	"	"	"	"	IN	"	"	"	"	5.0 V
		221	"	"	"	"	IN	5.0 V	"	"	"	"	"
		222	"	"	"	IN	5.0 V	"	"	"	"	"	"
		223	"	"	IN	5.0 V	"	"	"	"	"	"	"
t_{PLH4}		224	"	"	5.0 V	"	"	"	"	"	"	"	"
		225	"	"	"	"	"	"	"	"	"	"	"
		226	"	"	"	"	"	"	"	"	"	"	"
		227	"	"	"	"	"	"	"	"	"	"	IN
		228	"	"	"	"	"	IN	"	"	"	"	5.0 V
		229	"	"	"	"	IN	5.0 V	"	"	"	"	"
		230	"	"	"	IN	5.0 V	"	"	"	"	"	"
		231	"	"	IN	5.0 V	5.0 V	"	"	"	"	"	"
t_{PHL5}	3003 (Fig.11)	232	"	"	GND	GND	GND	"	5.0 V	"	GND	GND	GND
		233	"	"	"	"	"	"	"	"	"	"	"
		234	"	"	"	"	"	"	"	"	"	"	"
		235	"	"	"	"	"	"	"	"	"	"	IN
		236	"	"	"	"	"	IN	"	"	"	"	GND
		237	"	"	"	"	IN	GND	"	"	"	"	"
		238	"	"	"	IN	GND	"	"	"	"	"	"
		239	"	"	IN	GND	"	"	"	"	"	"	"
t_{PLH5}		240	"	"	GND	"	"	5.0 V	"	"	"	"	"
		241	"	"	"	"	"	"	"	"	"	"	"
		242	"	"	"	"	"	"	"	"	"	"	"
		243	"	"	"	"	"	"	"	"	"	"	IN
		244	"	"	"	"	"	IN	"	"	"	"	GND
		245	"	"	"	"	IN	GND	"	"	"	"	"
		246	"	"	"	IN	GND	"	"	"	"	"	"
		247	"	"	IN	GND	"	"	"	"	"	"	"
t_{PHL6}	3003 (Fig.12)	248	"	"	GND	"	"	5.0 V	"	"	5.0 V	"	"
		249	"	"	"	"	"	"	"	"	"	"	"
		250	"	"	"	"	"	"	"	"	"	"	"
		251	"	"	"	"	"	"	"	"	"	"	IN
		252	"	"	"	"	"	IN	"	"	"	"	GND
		253	"	"	"	"	IN	GND	"	"	"	"	"
		254	"	"	"	IN	GND	"	"	"	"	"	"
		255	"	"	IN	GND	"	"	"	"	"	"	"
t_{PLH6}		256	"	"	GND	"	"	5.0 V	"	"	"	"	"
		257	"	"	"	"	"	"	"	"	"	"	"
		258	"	"	"	"	"	"	"	"	"	"	"
		259	"	"	"	"	"	"	"	"	"	"	IN
		260	"	"	"	"	"	IN	"	"	"	"	GND
		261	"	"	"	"	IN	GND	"	"	"	"	"
		262	"	"	"	IN	GND	"	"	"	"	"	"
		263	"	"	IN	GND	GND	"	"	"	"	"	"

See footnotes at end of device type 54.

TABLE III. Group A inspection for device type 54 - Continued.

Symbol	MIL-STD-883 method	Cases E, F, Z Symbol	Terminal conditions 1/ C	B	A	EX	V_{DD}	Measured terminal	Test limits Subgroup 9 T_C = +25°C Min	Max	Subgroup 10 T_C = +125°C Min	Max	Subgroup 11 T_C = -55°C Min	Max	Unit
		Test no.	12	13	14	15	16								
t_{PLH3}	3003 (Fig.9)	208	5.0 V	5.0 V	IN	GND	5.0 V	A to J	32	650	32	655	25	490	ns
		209	5.0 V	IN	5.0 V	"	"	B to J	"	"	"	"	"	"	"
		210	IN	5.0 V	"	"	"	C to J	"	"	"	"	"	"	"
		211	5.0 V	"	"	"	"	D to J	"	"	"	"	"	"	"
		212	"	"	"	"	"	E to J	"	"	"	"	"	"	"
		213	"	"	"	"	"	F to J	"	"	"	"	"	"	"
		214	"	"	"	"	"	G to J	"	"	"	"	"	"	"
		215	"	"	"	"	"	H to J	"	"	"	"	"	"	"
t_{PLH4}	3003 (Fig.10)	216	"	"	IN	"	"	A to J	"	"	33	670	29	570	"
		217	"	IN	5.0 V	"	"	B to J	"	"	"	"	"	"	"
		218	IN	5.0 V	"	"	"	C to J	"	"	"	"	"	"	"
		219	5.0 V	"	"	"	"	D to J	"	"	"	"	"	"	"
		220	"	"	"	"	"	E to J	"	"	"	"	"	"	"
		221	"	"	"	"	"	F to J	"	"	"	"	"	"	"
		222	"	"	"	"	"	G to J	"	"	"	"	"	"	"
		223	"	"	"	"	"	H to J	"	"	"	"	"	"	"
t_{PLH4}		224	"	"	IN	"	"	A to J	35	595	42	830	31	610	"
		225	"	IN	5.0 V	"	"	B to J	"	"	"	"	"	"	"
		226	IN	5.0 V	"	"	"	C to J	"	"	"	"	"	"	"
		227	5.0 V	"	"	"	"	D to J	"	"	"	"	"	"	"
		228	"	"	"	"	"	E to J	"	"	"	"	"	"	"
		229	"	"	"	"	"	F to J	"	"	"	"	"	"	"
		230	"	"	"	"	"	G to J	"	"	"	"	"	"	"
		231	"	"	"	"	"	H to J	"	"	"	"	"	"	"
t_{PHL5}	3003 (Fig.11)	232	GND	GND	IN	"	"	A to J	33	665	39	775	29	575	"
		233	GND	IN	GND	"	"	B to J	"	"	"	"	"	"	"
		234	IN	GND	"	"	"	C to J	"	"	"	"	"	"	"
		235	GND	"	"	"	"	D to J	"	"	"	"	"	"	"
		236	"	"	5.0 V	"	"	E to J	"	"	"	"	"	"	"
		237	"	"	"	"	"	F to J	"	"	"	"	"	"	"
		238	"	"	"	"	"	G to J	"	"	"	"	"	"	"
		239	"	"	"	"	"	H to J	"	"	"	"	"	"	"
t_{PLH5}		240	"	"	IN	"	"	A to J	27	540	32	645	24	485	"
		241	"	IN	GND	"	"	B to J	"	"	"	"	"	"	"
		242	IN	GND	"	"	"	C to J	"	"	"	"	"	"	"
		243	GND	"	"	"	"	D to J	"	"	"	"	"	"	"
		244	"	"	5.0 V	"	"	E to J	"	"	"	"	"	"	"
		245	"	"	"	"	"	F to J	"	"	"	"	"	"	"
		246	"	"	"	"	"	G to J	"	"	"	"	"	"	"
		247	"	"	"	"	"	H to J	"	"	"	"	"	"	"
t_{PHL6}	3003 (Fig.12)	248	"	"	IN	"	"	A to J	32	640	38	755	27	540	"
		249	"	IN	GND	"	"	B to J	"	"	"	"	"	"	"
		250	IN	GND	"	"	"	C to J	"	"	"	"	"	"	"
		251	GND	"	"	"	"	D to J	"	"	"	"	"	"	"
		252	"	"	5.0 V	"	"	E to J	"	"	"	"	"	"	"
		253	"	"	"	"	"	F to J	"	"	"	"	"	"	"
		254	"	"	"	"	"	G to J	"	"	"	"	"	"	"
		255	"	"	"	"	"	H to J	"	"	"	"	"	"	"
t_{PLH6}		256	"	"	IN	"	"	A to J	30	585	35	700	26	520	"
		257	"	IN	GND	"	"	B to J	"	"	"	"	"	"	"
		258	IN	GND	"	"	"	C to J	"	"	"	"	"	"	"
		259	GND	"	"	"	"	D to J	"	"	"	"	"	"	"
		260	"	"	5.0 V	"	"	E to J	"	"	"	"	"	"	"
		261	"	"	"	"	"	F to J	"	"	"	"	"	"	"
		262	"	"	"	"	"	G to J	"	"	"	"	"	"	"
		263	"	"	"	"	"	H to J	"	"	"	"	"	"	"

TABLE III. Group A inspection for device type 54 - Continued.

Symbol	MIL-STD-883 method	Cases E, F, Z Symbol	Terminal conditions J	Kd	H	G	F	E	Kb	V_{cc}	Kc	Ka	D
		Test no.	1	2	3	4	5	6	7	8	9	10	11
t_{PHL7}	3003 (Fig.13)	264	OUT	5.0 V	GND	GND	GND	GND	5.0 V	GND	GND	5.0 V	5.0 V
		265	"	"	"	"	"	"	"	"	"	"	"
		266	"	"	"	"	"	"	"	"	"	"	"
		267	"	"	"	"	"	"	"	"	"	"	IN
		268	"	"	5.0 V	5.0 V	5.0 V	IN	"	"	"	"	GND
		269	"	"	"	5.0 V	IN	5.0 V	"	"	"	"	"
		270	"	"	"	IN	5.0 V	"	"	"	"	"	"
		271	"	"	IN	5.0 V	5.0 V	"	"	"	"	"	"
t_{PLH7}		272	"	"	GND	GND	GND	GND	"	"	5.0 V	"	5.0 V
		273	"	"	"	"	"	"	"	"	"	"	"
		274	"	"	"	"	"	"	"	"	"	"	"
		275	"	"	"	"	"	"	"	"	"	"	IN
		276	"	"	5.0 V	5.0 V	5.0 V	IN	"	"	"	"	GND
		277	"	"	"	5.0 V	IN	5.0 V	"	"	"	"	"
		278	"	"	"	IN	5.0 V	"	"	"	"	"	"
		279	"	"	IN	5.0 V	5.0 V	"	"	"	"	"	"
t_{PHL8}	3003 (Fig.14)	280	"	"	GND	GND	GND	GND	"	"	"	"	5.0 V
		281	"	"	"	"	"	"	"	"	"	"	"
		282	"	"	"	"	"	"	"	"	"	"	"
		283	"	"	"	"	"	"	"	"	"	"	IN
		284	"	"	5.0 V	5.0 V	5.0 V	IN	"	"	"	"	GND
		285	"	"	"	5.0 V	IN	5.0 V	"	"	"	"	"
		286	"	"	"	IN	5.0 V	"	"	"	"	"	"
		287	"	"	IN	5.0 V	5.0 V	"	"	"	"	"	"
t_{PLH8}		288	"	"	GND	GND	GND	GND	"	"	"	"	5.0 V
		289	"	"	"	"	"	"	"	"	"	"	"
		290	"	"	"	"	"	"	"	"	"	"	"
		291	"	"	"	"	"	"	"	"	"	"	IN
		292	"	"	5.0 V	5.0 V	5.0 V	IN	"	"	"	"	GND
		293	"	"	"	5.0 V	IN	5.0 V	"	"	"	"	"
		294	"	"	"	IN	5.0 V	"	"	"	"	"	"
		295	"	"	IN	5.0 V	5.0 V	"	"	"	"	"	"
t_{PHL9}	3003 (Fig.15)	296	"	"	GND	GND	GND	GND	GND	"	GND	IN	"
t_{PLH9}		297	"	"	"	"	"	"	GND	"	"	IN	"
t_{PHL10}	3003 (Fig.16)	298	"	"	"	"	"	"	IN	"	"	GND	"
t_{PLH10}		299	"	"	"	"	"	"	IN	"	"	"	"
t_{PHL11}	3003 (Fig.17)	300	"	"	"	"	"	"	GND	"	IN	"	"
t_{PLH11}		301	"	"	"	"	"	"	"	"	IN	"	"
t_{THL}	3004 (Fig.7)	302	"	"	"	"	"	"	"	"	GND	"	"
		303	"	"	"	"	"	"	"	"	"	"	"
		304	"	"	"	"	"	"	"	"	"	"	"
		305	"	"	"	"	"	"	"	"	"	"	IN
		306	"	"	"	"	"	IN	"	"	"	"	GND
		307	"	"	"	"	IN	GND	"	"	"	"	"
		308	"	"	"	IN	GND	"	"	"	"	"	"
		309	"	"	IN	GND	GND	"	"	"	"	"	"

See footnotes at end of device type 54.

TABLE III. Group A inspection for device type 54 - Continued.

Symbol	MIL-STD-883 method	Cases E, F, Z	Terminal conditions 1/					Measured terminal	Test limits						Unit
		Symbol	C	B	A	EX	V_{DD}		Subgroup 9 T_C = +25°C		Subgroup 10 T_C = +125°C		Subgroup 11 T_C = -55°C		
		Test no.	12	13	14	15	16		Min	Max	Min	Max	Min	Max	
t_{PHL7}	3003 (Fig.13)	264	5.0 V	5.0 V	IN	GND	5.0 V	A to J	34	675	40	790	30	590	ns
		265	5.0 V	IN	5.0 V	"	"	B to J	"	"	"	"	"	"	"
		266	IN	5.0 V	"	"	"	C to J	"	"	"	"	"	"	"
		267	5.0 V	5.0 V	"	"	"	D to J	"	"	"	"	"	"	"
		268	GND	GND	GND	"	"	E to J	"	"	"	"	"	"	"
		269	"	"	"	"	"	F to J	"	"	"	"	"	"	"
		270	"	"	"	"	"	G to J	"	"	"	"	"	"	"
		271	"	"	"	"	"	H to J	"	"	"	"	"	"	"
t_{PLH7}		272	5.0 V	5.0 V	IN	"	"	A to J	31	"	36	730	27	550	"
		273	5.0 V	IN	5.0 V	"	"	B to J	"	"	"	"	"	"	"
		274	IN	5.0 V	"	"	"	C to J	"	"	"	"	"	"	"
		275	5.0 V	5.0 V	"	"	"	D to J	"	"	"	"	"	"	"
		276	GND	GND	GND	"	"	E to J	"	"	"	"	"	"	"
		277	"	"	"	"	"	F to J	"	"	"	"	"	"	"
		278	"	"	"	"	"	G to J	"	"	"	"	"	"	"
		279	"	"	"	"	"	H to J	"	"	"	"	"	"	"
t_{PHL8}	3003 (Fig.14)	280	5.0 V	5.0 V	IN	"	"	A to J	36	715	42	840	31	630	"
		281	5.0 V	IN	5.0 V	"	"	B to J	"	"	"	"	"	"	"
		282	IN	5.0 V	"	"	"	C to J	"	"	"	"	"	"	"
		283	5.0 V	5.0 V	"	"	"	D to J	"	"	"	"	"	"	"
		284	GND	GND	GND	"	"	E to J	"	"	"	"	"	"	"
		285	"	"	"	"	"	F to J	"	"	"	"	"	"	"
		286	"	"	"	"	"	G to J	"	"	"	"	"	"	"
		287	"	"	"	"	"	H to J	"	"	"	"	"	"	"
t_{PLH8}		288	5.0 V	5.0 V	IN	"	"	A to J	30	600	36	720	27	535	"
		289	5.0 V	IN	5.0 V	"	"	B to J	"	"	"	"	"	"	"
		290	IN	5.0 V	"	"	"	C to J	"	"	"	"	"	"	"
		291	5.0 V	5.0 V	"	"	"	D to J	"	"	"	"	"	"	"
		292	GND	GND	GND	"	"	E to J	"	"	"	"	"	"	"
		293	"	"	"	"	"	F to J	"	"	"	"	"	"	"
		294	"	"	"	"	"	G to J	"	"	"	"	"	"	"
		295	"	"	"	"	"	H to J	"	"	"	"	"	"	"
t_{PHL9}	3003 (Fig.15)	296	"	"	"	"	"	Ka to J	34	690	38	760	30	595	"
t_{PLH9}		297	"	"	"	"	"	Ka to J	31	625	37	730	28	555	"
t_{PHL10}	3003 (Fig.16)	298	"	"	"	"	"	Kb to J	27	535	31	615	23	460	"
t_{PLH10}		299	"	"	"	"	"	Kb to J	26	515	30	605	23	465	"
t_{PHL11}	3003 (Fig.17)	300	"	"	"	"	"	Kc to J	21	420	24	475	13	360	"
t_{PLH11}		301	"	"	"	"	"	Kc to J	19	380	24	445	17	340	"
t_{THL}	3004 (Fig.7)	302	"	"	IN	"	"	J	7	135	8	160	5	115	"
		303	"	IN	GND	"	"	"	"	"	"	"	"	"	"
		304	IN	GND	"	"	"	"	"	"	"	"	"	"	"
		305	GND	"	"	"	"	"	"	"	"	"	"	"	"
		306	"	"	"	"	"	"	"	"	"	"	"	"	"
		307	"	"	"	"	"	"	"	"	"	"	"	"	"
		308	"	"	"	"	"	"	"	"	"	"	"	"	"
		309	"	"	"	"	"	"	"	"	"	"	"	"	"

TABLE III. Group A inspection for device type 54 - Continued.

Symbol	MIL-STD-883 method	Cases E, F, Z	Terminal conditions										
		Symbol	J	Kd	H	G	F	E	Kb	V_{SS}	Kc	Ka	D
		Test no.	1	2	3	4	5	6	7	8	9	10	11
t_{TLH}	3004 (Fig.7)	310	OUT	5.0 V	GND	GND	GND	GND	GND	GND	GND	GND	GND
		311	"	"	"	"	"	"	"	"	"	"	"
		312	"	"	"	"	"	"	"	"	"	"	"
		313	"	"	"	"	"	"	"	"	"	"	IN
		314	"	"	"	"	"	IN	"	"	"	"	GND
		315	"	"	"	"	IN	GND	"	"	"	"	"
		316	"	"	"	IN	GND	"	"	"	"	"	"
		317	"	"	IN	GND	"	"	"	"	"	"	"
t_{PLZ}	3003 (Fig.18)	318	"	IN	GND	"	"	"	"	"	"	"	"
t_{PHZ}		319	"	"	"	"	"	"	"	"	"	"	"
t_{PZL}		320	"	"	"	"	"	"	"	"	"	"	"
t_{PZH}		321	"	"	"	"	"	"	"	"	"	"	"

1/ Pins not designated may be "high" level logic, "low" level logic, or open. Exceptions are as follows: For $V_{IC(POS)}$ tests, the V_{SS} terminal shall be open; for $V_{IC(NEG)}$ tests, the V_{DD} terminal shall be open; for I_{SS} tests, the outputs shall be open.

2/ I_{SS} measurements shall be performed in sequence.

3/ The device manufacturer may, at his option, measure I_{IL} and I_{IH} at +25°C for each individual input or measure all inputs together.

4/ See 4.4.1c.

TABLE III. Group A inspection for device type 54 - Continued.

Symbol	MIL-STD-883 method	Cases E, F, Z	Terminal conditions 1/					Measured terminal	Test limits						Unit
		Symbol	C	B	A	EX	V_{DD}		Subgroup 9 T_C = +25°C		Subgroup 10 T_C = +125°C		Subgroup 11 T_C = -55°C		
		Test no.	12	13	14	15	16		Min	Max	Min	Max	Min	Max	
t_{TLH}	3004 (Fig.7)	310	GND	GND	IN	GND	5.0 V	J	6	115	7	140	5	100	ns
		311	GND	IN	GND	"	"	"	"	"	"	"	"	"	"
		312	IN	GND	"	"	"	"	"	"	"	"	"	"	"
		313	GND	"	"	"	"	"	"	"	"	"	"	"	"
		314	"	"	"	"	"	"	"	"	"	"	"	"	"
		315	"	"	"	"	"	"	"	"	"	"	"	"	"
		316	"	"	"	"	"	"	"	"	"	"	"	"	"
		317	"	"	"	"	"	"	"	"	"	"	"	"	"
t_{PLZ}	3003 (Fig.18)	318	"	"	5.0 V	"	"	Kd to J	18	350	25	490	18	350	"
t_{PHZ}		319	"	"	GND	"	"	"	18	350	25	490	18	350	"
t_{PZL}		320	"	"	5.0 V	"	"	"	23	450	32	630	23	450	"
t_{PZH}		321	"	"	GND	"	"	"	23	450	32	630	23	450	"

c. End-point electrical parameters shall be as specified in table II herein and shall consist of those subgroups specified in table IIa of test method 5005 of MIL-STD-883. Delta limits shall apply only to subgroup 5 of group B inspections, and shall consist of tests specified in table IV herein.

TABLE IV. Delta limits at +25°C.

Parameter 1/	Device types	
	01, 02, 03, 04	51, 52, 53, 54
I_{SS}	±10 nA	±10 nA
V_{OL1}	±0.04 V	2/
V_{OH1}	±0.08 V	2/
I_{OL1}	2/	±15%
I_{OH1}	2/	±15%

1/ Each of the above parameters shall be recorded before and after the required burn-in or life tests to determine delta's (Δ).
2/ Not applicable.

4.4.3 Group C inspection. Group C inspection shall be in accordance with table III of method 5005 of MIL-STD-883 and as follows:

a. End-point electrical parameters shall be as specified in table II herein. Delta limits shall apply only to subgroup 1 of group C inspection, and shall consist of tests specified in table IV herein.

b. Steady-state life test (method 1005 of MIL-STD-883) conditions:

(1) Test condition D, as specified in 4.5.2, and as shown on figure 5, or equivalent.

(2) T_A = +125°C minimum.

(3) Test duration, 1,000 hours, except as permitted by appendix B of MIL-M-38510 and method 1005 of MIL-STD-883.

4.4.4 Group D inspection. Group D inspection shall be in accordance with table IV of method 5005 of MIL-STD-883. End-point electrical parameters shall be as specified in table II herein.

4.4.5 Group E inspection. Group E inspection is required only for device types intended to be marked as radiation hardened (see 3.6.1). When group E testing is performed it shall be in accordance with table V of method 5005 of MIL-STD-883 and 4.5.5 herein. When group E inspection is performed for class S devices, the total dose radiation testing shall be included as an additional test in the wafer lot acceptance of method 5007 of MIL-STD-883.

TABLE V. Modes for high-voltage test.

Mode	+ Terminal	- Terminal
1	V_{DD}	Input
2	Input	V_{SS}
3	Input	Associated output

4.5 Methods of inspection. Methods of inspection shall be specified as follows:

4.5.1 Voltage and current. Unless otherwise specified, all voltages given are referenced to the microcircuit V_{SS} terminal, unless otherwise specified. Currents given are conventional current and positive when flowing into the referenced terminal.

4.5.2 Burn-in and life test cooldown procedures. Burn-in and life test cooldown procedures shall be in accordance with MIL-STD-883, methods 1005 and 1015.

4.5.3 High voltage (V_{ZAP}) test of input protection circuits. All input terminals (up to a maximum of four) of the DUT shall be subjected to a voltage pulse from a 100 pF source charged to 400 volts. This destructive test shall be conducted as follows using the test circuit on figure 19.

a. Measure I_{IL} and I_{IH} at the inputs selected, as stated above, at +25°C. The test limit for each input tested shall be ±10 nA at the specified V_{DD}. Measure I_{SS} on the DUT at +25°C. The test limit for this measurement shall be increased by a maximum of 20 percent of the specified I_{SS} table III limit at the specified V_{DD}.

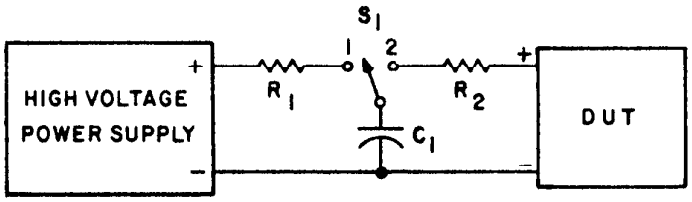

R_1 = 1 MΩ to 50 MΩ.
R_2 = 1.5 kΩ.
C_1 = 100 pF
V_{ZAP} = 400 V charge on C_1.
S_1 = Hg-wetted "bounceless" relay.

FIGURE 19. High voltage (V_{ZAP}) test circuit.

b. V_{ZAP} is applied to the DUT in the following modes (see table V) by charging C1 to V_{ZAP} with S1 in position 1 and then switching to position 2.

c. Within 24 hours repeat the I_{SS}, I_{IH}, and I_{IL} measurements on the same terminals as performed above. If a DUT exhibits leakage currents in excess of the specified limits after the V_{ZAP} test, it shall be classified as a failure.

d. For the 01, 51 device type pins 1 and 5, 8 and 13, are connected together for the V_{ZAP} test.

4.5.4 Quiescent supply current (I_{SS}) test. When performing quiescent supply current measurements (I_{SS}), the meter shall be placed so that all currents flow through the meter.

4.5.5 Radiation hardness assurance (RHA) testing. The RHA testing shall be performed in accordance with test procedures and sampling specified in table V of method 5005 of MIL-STD-883 and herein:

a. Before irradiation, selected samples shall be assembled in qualified packages and pass the governing electrical parameters (group A, subgroup 1 at +25°C) and also be subjected to the threshold-voltage test in table VIII in order to calculate the delta threshold voltage (ΔV_T) after irradiation.

b. The devices shall be subjected to a total radiation dose as specified in MIL-M-38510 for the radiation hardness assurance (RHA) level being tested, and meet the end-point electrical parameters as defined in table VI at +25°C, after exposure. The start and completion of the end-point electrical parameter measurements shall not exceed 2 hours following irradiation.

c. Threshold-voltage test circuit conditions shall be as specified in table VIII and figure 20. In situ and remote testing, the tests shall be performed with the devices biased in accordance with table VII and bias may be interrupted for up to 1 minute to remove devices to the remote bias fixture.

d. After irradiation, the devices shall pass the truth table test as specified in subgroup 7 in table III, or if subgroup 7 is not required, then an equivalent truth table test shall be performed.

TABLE VI. Radiation hardness end-point electrical parameters at +25°C.

Parameter	Test limits (all device types)	V_{DD}	
		Device types 01, 02, 03, 04	Device types 51, 52, 53, 54
		(V dc)	(V dc)
V_{TN}	0.3 V min	10	10
V_{TP}	2.8 V max	10	10
ΔV_T	1.4 V max	10	10
I_{SS}	100 x max limit	15	18
t_{PLH}	1.35 x max limit	5	5
t_{PHL}	1.35 x max limit	5	5

TABLE VII. Bias during exposure to radiation.

Device type	Pin connections 1/		
	10 V dc through a 30 kΩ to 60 kΩ resistor	V_{SS} = GND	V_{DD} = 10 V dc
01 51	2, 3, 6, 10, 11	4, 7, 9	14
02 52	1, 2, 3, 4, 5, 6, 7, 9, 14, 15	8	16
03 53	1, 2, 5, 6, 8, 9, 12, 13	7	14
04 54	2, 3, 4, 5, 6, 7, 9, 10, 11, 12, 13, 14, 15	8	16

1/ Pins not designated are open or connected to 10 V dc through a 30 kΩ to 60 kΩ resistor.

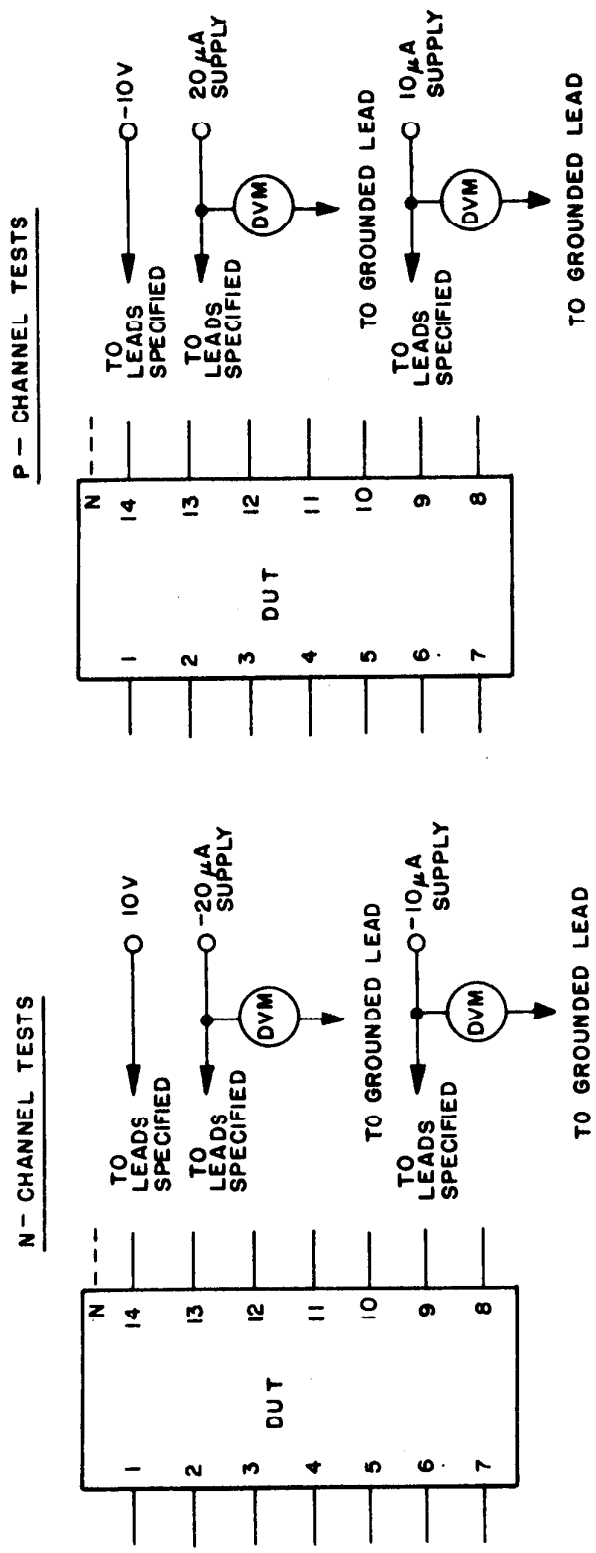

FIGURE 20. Threshold-voltage test circuit.

TABLE VIII. Threshold-voltage test circuit conditions.

Device type	Ground	10 V	V_{TN} measured at		Ground	-10 V	V_{TN} measured at	
			-20 μA supply	-10 μA supply			20 μA supply	10 μA supply
01 51	6	8, 14		7	6	7, 13		14
02 52	9	14-16	1-8		9	1-8	14-16	
03 53	8	14		1, 2, 5-7, 9, 12, 13	8	1, 2-5, 7, 9, 12, 13		14
04 54	10	16	2-9, 11-15		10	2-9, 11-15	16	

4.6 Data reporting. When specified in the purchase order or contract, a copy of the following data, as applicable, shall be supplied:

a. Attributes data for all screening tests (see 4.2) and variables data for all static burn-in, dynamic burn-in, and steady-state life tests.

b. A copy of each radiograph.

c. The quality conformance inspection data (see 4.4).

d. Parameter distribution data on parameters evaluated during burn-in (see 3.5).

e. Final electrical parameters data (see 4.2c).

5. PACKAGING

5.1 Packaging requirements. The requirements for packaging shall be in accordance with MIL-M-38510.

6. NOTES

6.1 Intended use. Microcircuits conforming to this specification are intended for original equipment design applications and logistic support of existing equipment.

6.2 Ordering data. The acquisition document should specify the following:

a. Complete part number (see 1.2).

b. Requirements for delivery of one copy of the quality conformance inspection data pertinent to the device inspection lot to be supplied with each shipment by the device manufacturer, if applicable.

c. Requirements for certificate of compliance, if applicable.

d. Requirements for notification of change of product or process to the contracting activity in addition to notification to the qualifying activity, if applicable.

e. Requirements for failure analysis (including required test condition of method 5003 of MIL-STD-883), corrective action and reporting of results, if applicable.

f. Requirements for product assurance options.

g. Requirements for lead lengths or lead forming, if applicable. These requirements shall not affect the part number.

h. Requirements for "JAN" marking.

i. Requirement for total dose radiation testing (see 3.6.1 and 4.5.5), if applicable.

6.3 Abbreviations, symbols, and definitions. The abbreviations, symbols, and definitions used herein are defined in MIL-M-38510, MIL-STD-1331, and as follows:

V_{ZAP}	Input test voltage.
C_I	Input terminal-to-V_{SS} capacitance.
GND	Ground. Zero voltage potential.
T_A	Free air temperature.
V_{DD}	Positive supply voltage.
V_{SS}	Negative supply voltage.
I_{SS}	Quiescent supply current.
$V_{IC(pos)}$	Positive clamping input to V_{DD}.
$V_{IC(neg)}$	Negative clamping input to V_{DD}.

6.4 Logistic support. Unless otherwise specified, microcircuits acquired for Government logistic support shall be acquired to device class S for National Aeronautics and Space Administration or class B for Department of Defense (see 1.2.2), lead finish C (see 3.3). Longer length leads and lead forming shall not affect the part number.

6.5 Substitutability. The cross-reference information below is presented for the convenience of users. Microcircuits covered by this specification will functionally replace the listed generic-industry type. Generic-industry microcircuit types may not have equivalent operational performance characteristics across military temperature ranges or reliability factors equivalent to MIL-M-38510 device types and may have slight physical variations in relation to case size. The presence of this information shall not be deemed as permitting substitution of generic-industry types for MIL-M-38510 types or as a waiver of any of the provisions of MIL-M-38510.

Military device type	Generic-industry type
01	4007A
02	4019A
03	4030A
04	4048A
51	4007UB
52	4019B
53	4030B
54	4048B

6.6 Handling. MOS devices must be handled with certain precautions to avoid damage due to accumulation of static charge. Input protective devices have been designed in the chip to minimize the effect of this static buildup. However, the following handling practices are recommended:

a. Devices should be handled on benches with conductive and grounded surface.

b. Ground test equipment, tools, and operator.

c. Do not handle devices by the leads.

d. Store devices in conductive foam or carriers.

e. Avoid use of plastic, rubber, or silk in MOS areas.

f. Maintain relative humidity above 50 percent, if practical.

6.7 Changes from previous issue. Asterisks are not used in this revision to identify changes with respect to the previous issue, due to the extensiveness of the changes.

Custodians:
Army - ER
Navy - EC
Air Force - 17
NASA - NA

Review activities:
Army - MI
Air Force - 11, 19, 85, 99
DLA - ES

User activities:
Army - AR, SM
Navy - AS, OS, CG, MC, SH

Preparing activity:
NASA - NA

Agent:
DLA - ES

(Project 5962-0964-1)