MIL-M-38510/57E
30 November 1987
SUPERSEDING
MIL-M-38510/57D
30 April 1984

MILITARY SPECIFICATION

MICROCIRCUITS, DIGITAL, POSITIVE LOGIC CMOS, STATIC SHIFT REGISTER, MONOLITHIC SILICON

This specification is approved for use by all Departments and Agencies of the Department of Defense.

1. SCOPE

1.1 Scope. This specification covers the detail requirements for monolithic silicon, CMOS logic microcircuits. Two product assurance classes and a choice of case outlines and lead finishes are provided for each type and are reflected in the complete part number.

1.2 Part number. The part number shall be in accordance with MIL-M-38510, and as specified herein.

1.2.1 Device type. The device type shall be as follows:

Device type	Circuit
01	Dual 4-stage/dual 5-stage static shift register
02	8-stage synchronous parallel or serial input/serial output static shift register
03	Dual 4-stage serial input/parallel output static shift register.
04	8-stage asynchronous parallel input/serial output or synchronous serial input/serial output static shift register.
05	64-stage static shift register.
06	8-stage bidirectional parallel/serial input/output bus register.
51	Dual 4-stage/dual 5-stage static shift register.
52	8-stage synchronous parallel or serial input/serial output static shift register.
53	Dual 4-stage serial input/parallel output static shift register.
54	8-stage asynchronous parallel input/serial output or synchronous serial input/serial output static shift register.
55	64-stage static shift register.
56	8-stage bidirectional parallel/serial input/output bus register.

1.2.2 Device class. The device class shall be the product assurance level as defined in MIL-M-38510.

1.2.3 Case outline. The case outline shall be designated as follows:

Outline letter	Case outline (see MIL-M-38510, appendix C)
A	F-1 (14-lead, 1/4" x 1/4"), flat package
C	D-1 (14-lead, 1/4" x 3/4"), dual-in-line package

Beneficial comments (recommendations, additions, deletions) and any pertinent data which may be of use in improving this document should be addressed to: NASA Parts Project Office, Code 311.A, NASA/Goddard Space Flight Center, Greenbelt, MD 20771 by using the self-addressed Standardization Document Improvement Proposal (DD Form 1426) appearing at the end of this document or by letter.

AMSC N/A FSC 5962
DISTRIBUTION STATEMENT A. Approved for public release; distribution is unlimited.

D	F-2 (14-lead, 1/4" x 3/8"), flat package
E	D-2 (16-lead, 1/4" x 7/8"), dual-in-line package
F	F-5 (16-lead, 1/4" x 3/8"), flat package
J	D-3 (24-lead, 1/2" x 1-1/4"), dual-in-line package
K	F-6 (24-lead, 3/8" x 5/8"), flat package
X	F-1 (14-lead, 1/4" x 1/4"), flat package, except A dimensions = 0.1" (2.54 mm max.)
Y	F-2 (14-lead, 1/4" x 3/8"), flat package, except A dimensions = 0.1" (2.54 mm max.)
Z	F-5 (16-lead, 1/4" x 3/8"), flat package, except A dimensions = 0.1" (2.54 mm max.)
U	F-6 (24-lead, 3/8" x 5/8"), flat package, except A dimension = 0.1" (2.54 mm max.)

NOTES

1. As an exception to 3.5.6.2.3 of MIL-M-38510, for case outlines X, Y, Z, and U only, the leads of bottom brazed ceramic packages (i.e., configuration 2 of case outlines F-1, F-2, F-5, and F-6) may have electroless nickel undercoating which shall be 50 to 200 microinches (1.27 to 5.08 μm) thick provided the lead finish is hot solder dip (i.e., finish letter A) and provided that, after any lead forming, an additional hot solder dip coating is applied which shall extend from the outer tip of the lead to no more than 0.015 inch (0.38 mm) from the package edge.

2. For bottom or side brazed packages, case outlines X, Y, Z, and U only, the S_1 dimension may go to .000 inch (.00 mm) minimum.

1.3 Absolute maximum ratings:

Supply voltage range (V_{DD} - V_{SS})	
Device types 01-06 - - - - - - - -	-0.5 V dc to +15.5 V dc
Device types 51-56 - - - - - - - -	-0.5 V dc to +18.0 V dc
Input current (each input) - - - - -	±10 mA
Input voltage range- - - - - - - - -	$(V_{SS} - 0.5\ V) \leq V_I \leq (V_{DD} + 0.5\ V)$
Storage temperature range- - - - - -	-65°C to +175°C
Maximum power dissipation, P_D- - - -	200 mW
Lead temperature (soldering, 10 seconds)- - - - - - - - - - - -	+300°C
Thermal resistance, junction-to-case (θ_{JC}): - - - - - - - - - - - - - - -	(see MIL-M-38510, appendix C)
Junction temperature (T_J)- - - - - -	+175°C

1.4 Recommended operating conditions:

Supply voltage (V_{DD} - V_{SS}):	
Device types 01-06 - - - - - - - - -	4.5 V dc to 12.5 V dc
Device types 51-56 - - - - - - - - -	4.5 V dc to 15 V dc
Input low (V_{IL}) voltage range:	
Device types 01-06 - - - - - - - - -	0-0.85 V dc at V_{DD} = 5 V dc, 0-2.1 V dc at V_{DD} = 12.5 V dc
Device types 51-56 - - - - - - - - -	0-1.5 V dc at V_{DD} = 5 V dc, 0-2.0 V dc at V_{DD} = 10 V dc, 0-4.0 V dc at V_{DD} = 15 V dc, V_{OL} = 10% V_{DD}, V_{OH} = 90% V_{DD}
Input high (V_{IH}) voltage range:	
Device types 01-06 - - - - - - - - -	3.95-5.0 V dc at V_{DD} = 5 V dc, 10.0-12.5 V dc at V_{DD} = 12.5 V dc
Device types 51-56 - - - - - - - - -	3.5-5.0 V dc at V_{DD} = 5 V dc, 8.0-10.0 V dc at V_{DD} = 10 V dc, 11.0-15.0 V dc at V_{DD} = 15 V dc, V_{OL} = 10% V_{DD}, V_{OH} = 90% V_{DD}
Load capacitance- - - - - - - - - - - -	50 pF maximum
Operating temperature range - - - - -	-55°C to +125°C

2. APPLICABLE DOCUMENTS

2.1 Government specifications and standards. The following specification and standard form a part of this specification to the extent specified herein. Unless otherwise specified, the issues of these documents shall be those listed in the issue of the Department of Defense Index of Specifications and Standards and supplement thereto, cited in the solicitation.

SPECIFICATION
MILITARY
MIL-M-38510 - Microcircuits, General Specification for.

STANDARD
MILITARY
MIL-STD-883 - Test Methods and Procedures for Microelectronics.

(Copies of the specification and standard required by manufacturers in connection with specific acquisition functions should be obtained from the contracting activity or as directed by the contracting activity.)

2.2 Order of precedence. In the event of a conflict between the text of this specification and the references cited herein (except for associated detail specifications, specification sheets or MS standards), the text of this specification shall take precedence. Nothing in this specification, however, shall supersede applicable laws and regulations unless a specific exemption has been obtained.

3. REQUIREMENTS

3.1 Detail specifications. The individual item requirements shall be in accordance with MIL-M-38510, and as specified herein.

3.2 Design, construction, and physical dimensions. The design, construction, and physical dimensions shall be as specified in MIL-M-38510 and herein. Although eutectic die bonding is preferred, epoxy die bonding may be performed. However, the resin used shall be Dupont 5504 Conductive Silver Paste, or equivalent, which is cured at 200°C ±10°C for a minimum of 2 hours. The use of equivalent epoxies or cure cycles shall be approved by the qualifying activity. Equivalency shall be demonstrated in data submitted to the qualifying activity for verification.

3.2.1 Logic diagrams and terminal connections. The logic diagrams and terminal connections shall be as specified on figure 1 and 2.

3.2.2 Truth tables and logic equations. The truth tables and logic equations shall be as specified on figure 3.

3.2.3 Schematic circuits. The schematic circuits shall be submitted to the preparing activity prior to inclusion of a manufacturer's device in this specification and shall be submitted to the qualifying activity and agent activity (DESC-ECS) as a prerequisite for qualification. All qualified manufacturer's schematics shall be maintained and available upon request.

3.2.4 Case outlines. The case outlines shall be as specified in 1.2.3.

3.3 Lead material and finish. The lead material and finish shall be in accordance with MIL-M-38510 and 6.4 herein.

3.4 Electrical performance characteristics. The electrical performance characteristics are as specified in table I, and apply over the full recommended case operating temperature range, unless otherwise specified.

3.5 Electrical test requirements. The electrical test requirements for each device class shall be the subgroups specified in table II. The electrical tests for each subgroup are described in table III.

3.6 Marking. Marking shall be in accordance with MIL-M-38510 and 1.2 herein.

3.6.1 Total dose radiation hardness identifier. Total dose radiation hardness identifier shall be in accordance with MIL-M-38510 and 4.5.5 herein.

3.6.2 Serialization. All class S devices shall be serialized in accordance with MIL-M-38510.

3.6.3 Correctness of indexing and markings. All devices shall be subjected to the final electrical tests specified in table II after part number marking to verify that they are correctly indexed and identified by part number. Optionally, an approved electrical test may be devised especially for this requirement.

3.7 Microcircuit group assignment. The devices covered by this specification shall be in microcircuit group number 40 (see MIL-M-38510, appendix E).

4. QUALITY ASSURANCE PROVISIONS

4.1 Sampling and inspection. Sampling and inspection procedures shall be in accordance with MIL-M-38510 and methods 5005 and 5007, as applicable, of MIL-STD-883, except as modified herein.

4.2 Screening. Screening shall be in accordance with method 5004 of MIL-STD-883, and shall be conducted on all devices prior to qualification and quality conformance inspection. The following additional criteria shall apply:

a. Delete the sequence specified in initial (pre-burn-in) electrical parameters (3.1.10) through interim (post-burn-in) electrical parameters (3.1.14) and substitute lines 1 through 7 of table II herein.

b. Burn-in (method 1015 of MIL-STD-883).

1. Static tests (test condition A) using the circuit shown on figure 4, or equivalent. Ambient temperature (T_A) shall be 125°C minimum. Test duration for each static test shall be 24 hours minimum for class S devices and in accordance with table I of method 1015 for class B devices.

2. Dynamic test (test condition D) using the circuit shown on figure 5, or equivalent. Ambient temperature (T_A) shall be 125°C minimum. Test duration shall be in accordance with table I of method 1015.

c. Interim and final electrical parameters shall be as specified in table II herein.

d. For class S devices, post dynamic burn-in, or class B devices, post static burn-in, electrical parameter measurements may, at the manufacturer's option, be performed separately or included in the final electrical parameter measurements.

e. When device types 01 through 06 are qualified by extention (see 4.3.1), they shall be screened in accordance with the requirements for corresponding device types 51 through 56.

4.2.1 Percent defective allowable (PDA).

a. The class S devices PDA shall be 5 percent for static burn-in and 5 percent for dynamic burn-in, based on the exact number of devices submitted to each separate burn-in.

b. Static burn-in I and II failures shall be cumulative for determining PDA.

c. The class B devices PDA shall be in accordance with MIL-M-38510 for static burn-in. Dynamic burn-in is not required.

d. Those devices whose measured characteristics after burn-in exceed the specified delta (Δ) limits or electrical parameter limits specified in table III, subgroup 1, are defective and shall be removed from the lot. The verified failures divided by the total number of devices in the lot initially submitted to burn-in shall be used to determine the percent defective for the lot and the lot shall be accepted or rejected based on the specified PDA.

4.3 Qualification inspection. Qualification inspection shall be in accordance with MIL-M-38510. Inspections to be performed shall be those specified in method 5005 of MIL-STD-883 and herein for groups A, B, C, D, and E inspections (see 4.4.1 through 4.4.5).

4.3.1 Qualification extension. When authorized by the qualifying activity, for qualification inspection, if a manufacturer qualifies to a 51-56 device type which is manufactured identically to a 01-06 device type on this specification, then the 01-06 device type may be part I qualified by conducting only group A electrical tests and any additional electrical tests specified, worst case and submitting data in accordance with MIL-M-38510, appendix D (i.e., groups A, B, C, D, and E tests are not required).

4.4 Quality conformance inspection. Quality conformance inspection shall be in accordance with MIL-M-38510. Inspections to be performed shall be those specified in method 5005 of MIL-STD-883 and herein for groups A, B, C, D, and E, inspections (see 4.4.1 through 4.4.5).

4.4.1 Group A inspection. Group A inspection shall be in accordance with table I of method 5005 of MIL-STD-883 and as follows:

a. End-point electrical parameters shall be performed in accordance with table II herein.

b. Subgroups 5 and 6 of table I of method 5005 of MIL-STD-883 shall be omitted.

c. Subgroup 4 (C_i measurement) shall be measured only for initial qualification and after process or design changes which may affect input capacitance. Capacitance shall be measured between the designated terminal and V_{SS} at a frequency of 1 MHz.

d. Subgroups 9 and 11 shall be measured only for initial qualification and after process or design changes which may affect dynamic performance.

e. At the manufacturer's option, test tapes may be programmed simultaneously for each identical section provided that each output is measured and each specified input combination is tested.

f. When the 01 through 06 device types are qualified by extension (see 4.3.1), these device types will be inspected (QCI) according to the 51 through 56 device type requirements respectively.

4.4.2 Group B inspection. Group B inspection shall be in accordance with table II of method 5005 of MIL-STD-883 and as follows:

a. Class S steady-state life (accelerated) test circuits shall be submitted to the qualifying activity for approval. When the alternate steady-state life test is used, the circuit of figure 5, or equivalent, shall be used.

b. A special subgroup shall be added using an LTPD of 15 for classes S and B, and shall be performed on each inspection lot for initially qualified device types 01-06, and measured only for initial qualification and after process or design changes for initially qualified device types 51-56. This subgroup shall consist of a high voltage test of the input protection circuits, V_{ZAP} (see 4.5.3).

c. End-point electrical parameters shall be as specified in table II herein and shall consist of subgroups specified in table IIa of test method 5005 of MIL-STD-883. Delta limits shall apply only to subgroup 5 of group B inspection and shall consist of tests specified in table IV herein.

TABLE I. Electrical performance characteristics.

Test	Symbol	Conditions 1/ V_{SS} = 0 V, -55°C ≤ T_C ≤ 125°C, Unless otherwise specified		Device type	Limits Min	Limits Max	Unit
Positive clamping input to V_{DD}	$V_{IC(pos)}$	T_C = 25°C, V_{DD} = GND, V_{SS} = Open, Output = Open, I_I = 1 mA		All		1.5	V
Negative clamping input to V_{DD}	$V_{IC(neg)}$	T_C = 25°C, V_{DD} = Open, V_{SS} = GND, Output = Open, I_I = -1 mA		All		-6	V
Quiescent supply current	I_{SS}	Any combination of inputs	V_{DD}=15 V dc	01		3.0	μA
				02,03		5.0	μA
				04,06			μA
				05		20	μA
			V_{DD}=18 V dc	51		3.0	μA
				52,53		5.0	μA
				54,56			μA
				55		20	μA
High level output voltage Any output	V_{OH1}	V_{DD} = 5 V dc (see table III)	I_{OH}=-70 μA	01			
Any output			I_{OH}=-55 μA	02, 03,04			
Q output			I_{OH}=-225 μA	05	4.5		V
$\overline{Q}$ output			I_{OH}=-60 μA	05			
Delayed clock output			I_{OH}=-280 μA	05			
Any output			I_{OH}=-35 μA	06			
High level output voltage	V_{OH2}	V_{DD} = 12.5 V dc, I_{OH} = 0 (see table III)		01,02, 03,04, 05,06	11.25		V
High level output voltage	V_{OH3}	V_{DD} = 15 V dc, I_{OH} = 0 (see table III)		51,52, 53,54, 55,56	14.95		V
Low level output voltage Any output	V_{OL1}	V_{DD} = 5 V (see table III)	I_{OL}=85 μA	01,02, 03,04			
Q output			I_{OL}=900 μA	05			
$\overline{Q}$ output			I_{OL}=60 μA	05		0.50	V
Delayed clock output			I_{OL}=280 μA	05			
Any output			I_{OL}=70 μA	06			
Low level output voltage	V_{OL2}	V_{DD} = 12.5 V dc, I_{OL} = 0 (see table III)		01,02, 03,04, 05,06		1.25	V
Low level output voltage	V_{OL3}	V_{DD} = 15 V dc, I_{OL} = 0 (see table III)		51,52, 53,54, 55,56		.05	V
Output low (sink) current	I_{OL1}	V_{DD} = 5 V, V_{OL} = 0.4 V, V_{IN} = V_{SS}		51,52, 53,54	0.36		mA dc
	I_{OL2}	V_{DD} = 15 V dc, V_{OL} = 1.5 V dc, V_{IN} = 15 V dc		55,56	2.4		mA dc
Output high (source) current	I_{OH1}	V_{DD} = 5 V dc, V_{OH} = 4.6 V dc, V_{IN} = V_{DD}		51,52, 53,54	-0.36		mA dc
	I_{OH2}	V_{DD} = 15 V dc, V_{OH} = 13.5 V dc, V_{IN} = V_{DD}		55,56	-2.4		mA dc

See footnotes at end of table.

TABLE I. Electrical performance characteristics - Continued.

Test	Symbol	Conditions 1/ V_{SS} = 0 V -55°C ≤ T_C ≤ 125°C Unless otherwise specified		Device type	Limits Min	Limits Max	Unit
Input leakage current (high)	I_{IH} 2/	Measure inputs sequentially	V_{DD}=15 V dc	01,02, 03,04, 05,06		45	nA
			V_{DD}=18 V dc	51,52, 53,54, 55,56		45	nA
Input leakage current (low)	I_{IL} 2/	Measure inputs sequentially	V_{DD}=15 V dc	01,02, 03,04, 05,06		-45	nA
			V_{DD}=18 V dc	51,52, 53,54, 55,56		-45	nA
Input capacitance test	C_i	V_{DD} = 0 V dc, f = 1 MHz T_C = 25°C		01,05		70	pF
				02,03, 04,06		12	
				56,		7.5	
				51,53		12	
				55,		70	
				52,54		12	
Propagation delay high to low level (Clock to any output)	t_{PHL}	V_{DD} = 5.0 V dc		01,	20	1200	ns
				51	20	560	
				06	13	1300	
				56	13	980	
(Clock or reset to output)				04	20	1465	
				54	20	490	
(Reset to output)				03	20	1465	
				53	20	490	
(Clock to Q output)				02	13	1465	
				52	13	450	
				03	20	1465	
				53	20	560	
				05	13	1590	
				55	13	840	
(Clock to $\overline{Q}$ output)				05	13	1980	
				55	13	840	
(Clock to delayed clock output)				05	13	975	
				55	13	350	
Propagation delay low to high level (Clock to any output)	t_{PLH}			01,	20	1200	ns
				51	20	560	
				06	13	1300	
				56	13	980	
(Clock or reset to output)				04	20	1465	
				54	20	490	
(Clock to Q output)				02	13	1465	
				52	13	450	
				03	20	1465	
				53	20	560	
				05	13	1590	
				55	13	840	
(Clock to $\overline{Q}$ output)				05	13	1980	
				55	13	840	
(Clock to delayed clock output)				05	13	975	
				55	13	350	

TABLE I. Electrical performance characteristics - Continued.

Test	Symbol	Conditions 1/ V_{SS} = 0 V -55°C T_C 125°C Unless otherwise specified	Device type	Limits Min	Limits Max	Unit
Transition times high to low level (Any output)	t_{THL}	V_{DD} = 5.0 V dc	01	13	1140	ns
			51	13	200	
			02	10	975	
			52,56	10	280	
			03	13	975	
			53,54	13	280	
			04	13	1050	
			06	10	1300	
(Q output)			05	10	435	
			55	10	280	
($\overline{Q}$ output)			05	10	2100	
			55	10	280	
(Delayed clock output)			05	10	525	
			55	10	200	
Transition times low to high level (Any output)	t_{TLH}		01	13	1140	
			51	13	200	
			02	10	1350	
			52,56	10	280	
			03	13	1465	
			53,54	13	280	
			04	13	1350	
			06	10	2300	
(Q output)	t_{TLH1}		05	10	510	
			55	10	280	
($\overline{Q}$ output)	t_{TLH2}		05	10	2100	
			55	10	280	
(Delayed clock output)	t_{TLH3}		05	10	525	
			55	10	200	
Maximum clock frequency	f_{CL}	V_{DD} = 5.0 V dc, C_L = 50 pF	01,02	700		kHz
			03,04	200		
			05	550		
			06	525		
			51	1.4		MHz
			52	1.2		
			53	1.5		
			54	1.0		
			55	800		kHz
			56	750		
Setup time	t_{SETUP}		01,51	115		ns
			53	150		
			02,03, 04	500		
			52,54	180		
			05	680		
			55	300		
			06	650		
			56	240		
Minimum clock pulse width	t_p	V_{DD} = 5.0 V, C_L = 50 pF, T_C = 25°C	01,03,06	330		
			02,03,05	400		
			51,54	200		
			52	180		
			53,56	250		
			55	300		
Minimum reset pulse width	$t_{p(RS)}$		03,05	400		ns
Minimum high level AE, P/S, A/S pulse width	t_{PH}		06,56	480		

1/ Complete terminal conditions shall be as specified in table III.
2/ Input current at one input mode.
3/ V_{IL} and V_{IH}, for B series only can be performed as functional tests.

TABLE II. Burn-in and electrical test requirements.

Line no.	Applicable tests and MIL-STD-883 test methods	Class S device 1/				Class B device 1/			
		Ref. par.	Table 2/ III sub-groups	Table 3/ IV delta limits	Test circuit figure	Ref. par.	Table 2/ III sub-groups	Table 3/ IV delta limits	Test circuit figure
1	Interim electrical parameters (method 5004)		1				1		
2	Static burn-in I (method 1015)	4.2b. 4.5.2			4				
3	Same as line 1		1	Δ					
4	Static burn-in II (method 1015)	4.2b. 4.5.2			4	4.2b. 4.5.2	4/		4
5	Same as line 1		1*	Δ		4.2d.	1*	Δ	
6	Dynamic burn-in (method 1015)	4.2b. 4.5.2			5				
7	Same as line 1	4.2d.	1*	Δ					
8	Final electrical parameters (method 5004)		1*,2,3,7, 9				1*,2,3,7, 9		
9	Group A end point electrical parameters (method 5005)	4.4.1	1,2,3,4, 7,8,9, 10,11			4.4.1	1,2,3, 4,7,8,9, 10,11		
10	Group B end point electrical parameters (method 5005)	4.4.2	1,2,3,7, 8,9,10,11	Δ					
11	Group C end point electrical parameters (method 5005)					4.4.3	1,2,3	Δ	
12	Group D end point electrical parameters (method 5005)	4.4.4	1,2,3			4.4.4	1,2,3		

1/ Blank spaces indicate tests are not applicable.

2/ (*) indicates PDA applies to subgroup 1 (see 4.2.1).

3/ (Δ) indicates delta limits shall be required on table III, subgroup 1, where specified, and delta values shall be computed with reference to the previous interim electrical parameters.

4/ The device manufacturer may, at his option, either perform delta measurements or within 24 hours after burn-in (or removal of bias) perform the final electrical parameter measurements.

Device types 01 and 51

Cases A, C D, X and Y

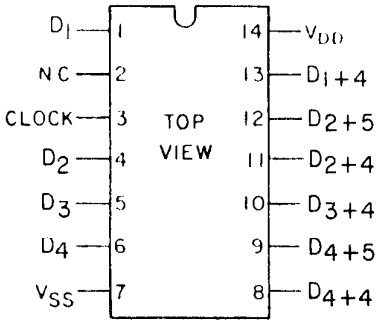

Device types 02, 04, 52, and 54

Cases E, F and Z

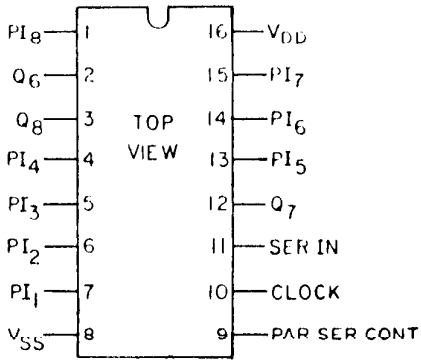

Device types 03 and 53

Cases E, F and Z

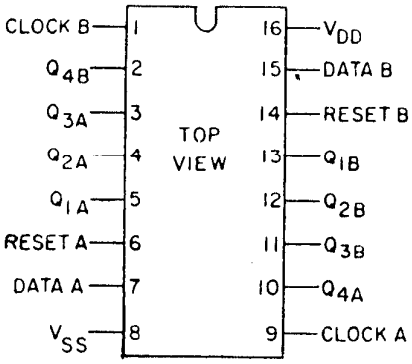

Device types 05 and 55

Cases E, F and Z

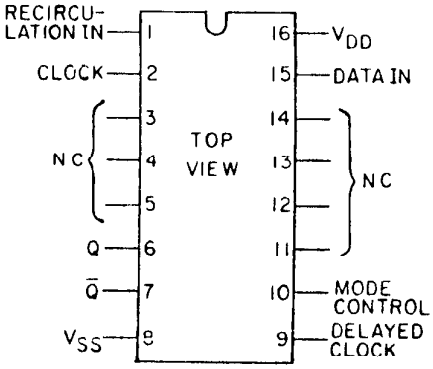

Device types 06 and 56

Cases J, K and U

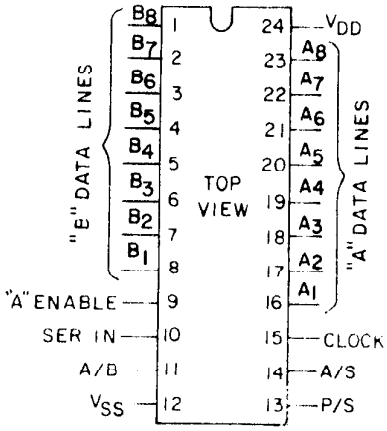

FIGURE 1. Terminal connections.

Device types 01 and 51

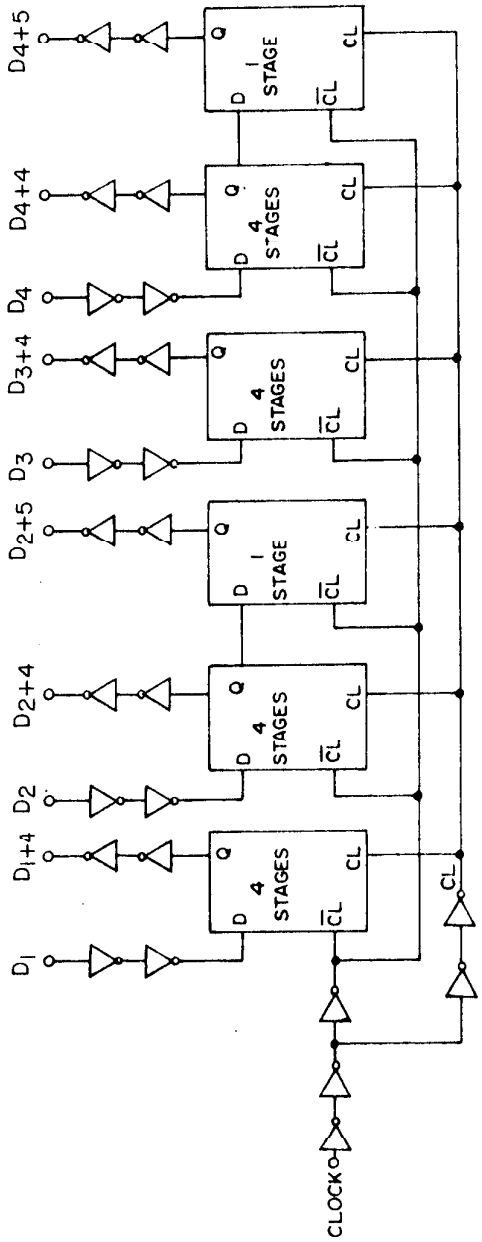

FIGURE 2. Logic diagrams.

Device types 02 and 52

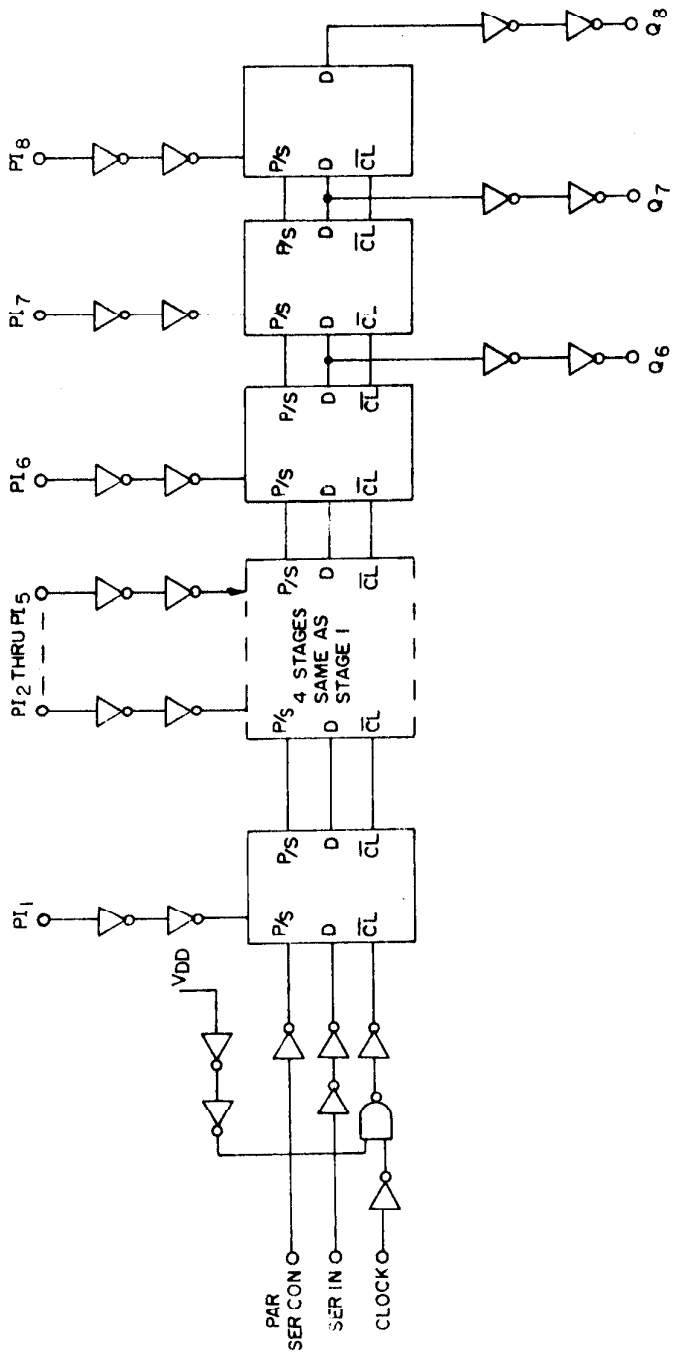

FIGURE 2. Logic diagrams - Continued.

Device types 03 and 53

(1/2 shown)

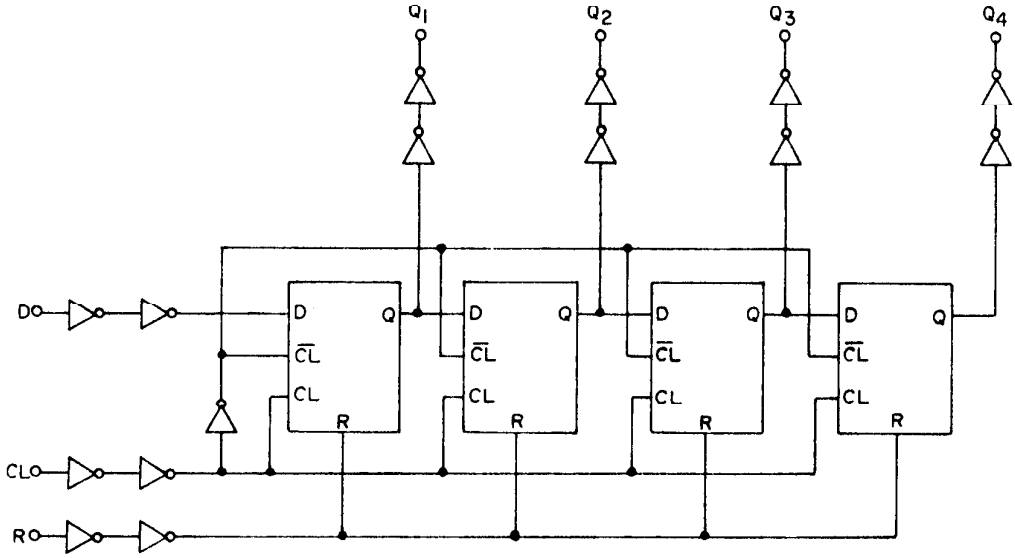

FIGURE 2. Logic diagrams - Continued.

Device types 04 and 54

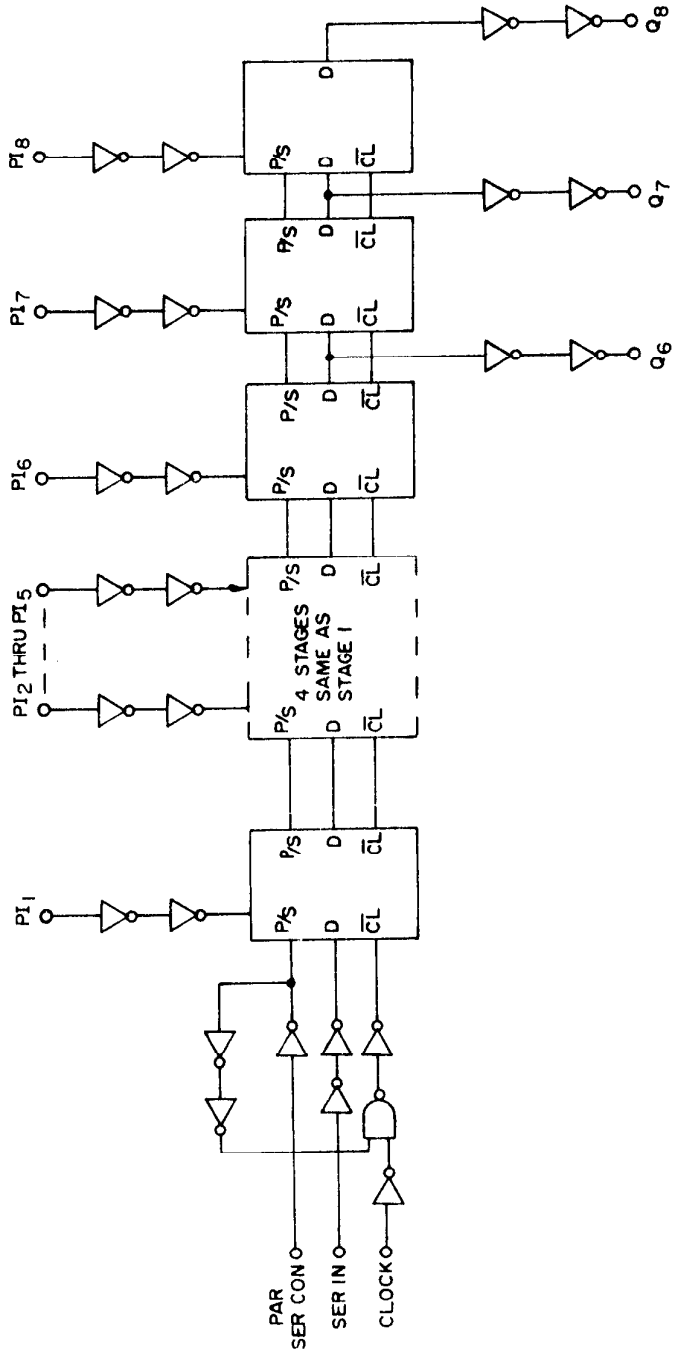

FIGURE 2. Logic diagrams - Continued.

Device types 05 and 55

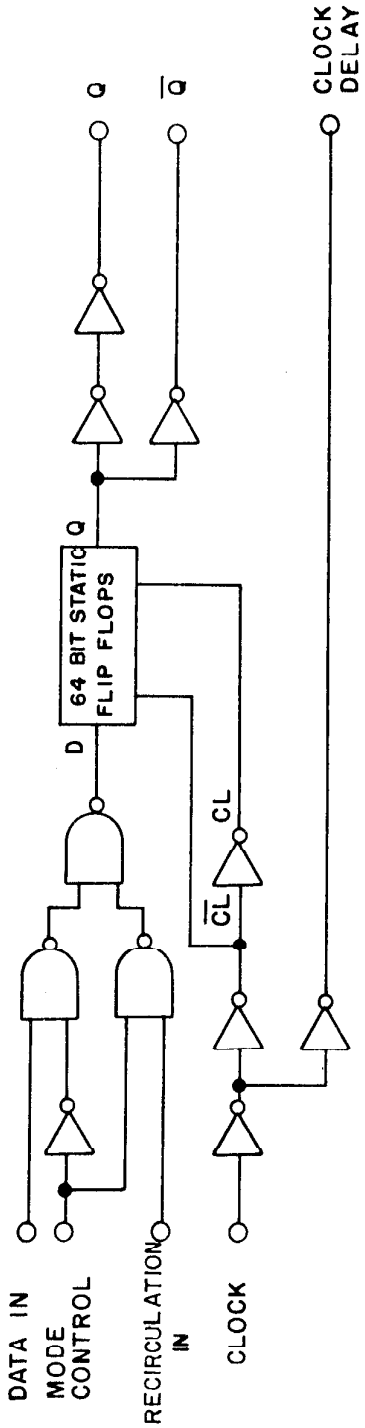

FIGURE 2. Logic diagrams - Continued.

Device types 06 and 56

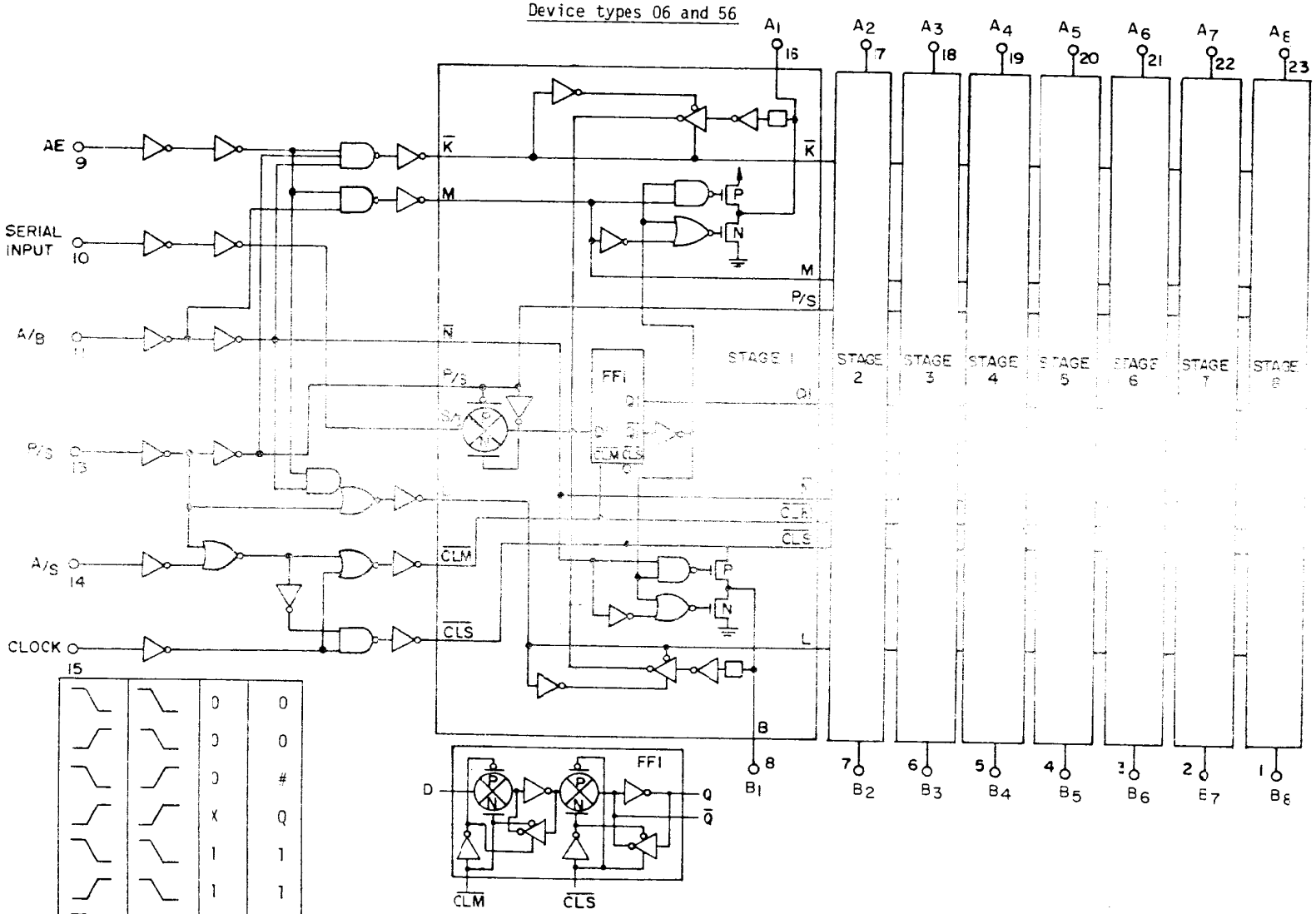

↘	↘	0	0
↗	↘	0	0
↘	↗	0	#
↗	↗	X	Q
↘	↘	1	1
↗	↘	1	1
↘	↗	1	#

Flip flop truth table

# = Invalid condition
X = Don't care

FIGURE 2. Logic diagrams - Continued.

Device types 01 and 51

TRUTH TABLE FOR SHIFT REGISTER STAGE

D	CL▲	D+1
0	↘	0
1	↘	1
X	↗	NC

Device types 02 and 52

CL▲	SER IN	PAR/SER CONTROL	PI-1	PI-n	Q_1 (Internal)	Q_n
↗	X	1	0	0	0	0
↗	X	1	1	0	1	0
↗	X	1	0	1	0	1
↗	X	1	1	1	1	1
↗	0	0	X	X	0	Q_n-1
↗	1	0	X	X	1	Q_n-1
↘	X	X	X	X	Q_1	Q_n

Device types 03 and 53

CL▲	D	R	Q_1	Q_n
↗	0	0	0	Q_{n-1}
↗	1	0	1	Q_{n-1}
↘	X	0	Q_1	Q_n
X	X	1	0	0

Device types 04 and 54

CL▲	Serial Input	Parallel/ Serial Control	PI-1	PI-n	Q_1 (Internal)	Q_n
X	X	1	0	0	0	0
X	X	1	0	1	0	1
X	X	1	1	0	1	0
X	X	1	1	1	1	1
↗	0	0	X	X	0	Q_n-1
↗	1	0	X	X	1	Q_n-1
↘	X	0	X	X	Q_1	Q_n

FIGURE 3. Truth tables.

Device types 05 and 55

INPUT CONTROL CIRCUIT TRUTH TABLE

DATA	RECIRC.	MODE	BIT INTO STAGE 1
1	X	0	1
0	X	0	0
X	1	1	1
X	0	1	0

TYPICAL STAGE TRUTH TABLE

D	CL▲	D+1
0	↗	0
1	↗	1
X	↘	NC

Device types 06 and 56

"A" Enable	P/S	A/B	A/S	Operation*
L	L	L	X	Serial Mode; Synch. Serial Data Input, "A" Parallel Data Outputs Disabled
L	L	H	X	Serial Mode; Synch. Serial Data Input, "B" Parallel Data Output
L	H	L	L	Parallel Mode; "B" Synch. Parallel Data Inputs, "A" Parallel Data Outputs Disabled
L	H	L	H	Parallel Mode; "B" Asynch. Parallel Data Inputs, "A" Parallel Data Outputs Disabled
L	H	H	L	Parallel Mode; "A" Parallel Data Inputs Disabled, "B" Parallel Data Outputs, Synch. Data Recirculation
L	H	H	H	Parallel Mode; "A" Parallel Data Inputs Disabled, "B" Parallel Data Outputs, Asynch. Data Recirculation
H	L	L	X	Serial Mode; Synch. Serial Data Input, "A" Parallel Data Output
H	L	H	X	Serial Mode; Synch. Serial Data Input, "B" Parallel Data Output
H	H	L	L	Parallel Mode; "B" Synch. Parallel Data Input, "A" Parallel Data Output
H	H	L	H	Parallel Mode; "B" Asynch. Parallel Data Input, "A" Parallel Data Output
H	H	H	L	Parallel Mode; "A" Synch. Parallel Data Input, "B" Parallel Data Output
H	H	H	H	Parallel Mode; "A" Asynch. Parallel Data Input, "B" Parallel Data Output

*Outputs change at positive transition of clock in the serial mode and when the A/S control input is "low" in the parallel mode.

NOTES:
1. Positive logic (Logic 0 $\cong V_{SS}$ and logic 1 $\cong V_{DD}$).
2. NC - No change
3. X - Don't care case
4. ▲ - Level change

FIGURE 3. Truth tables - Continued.

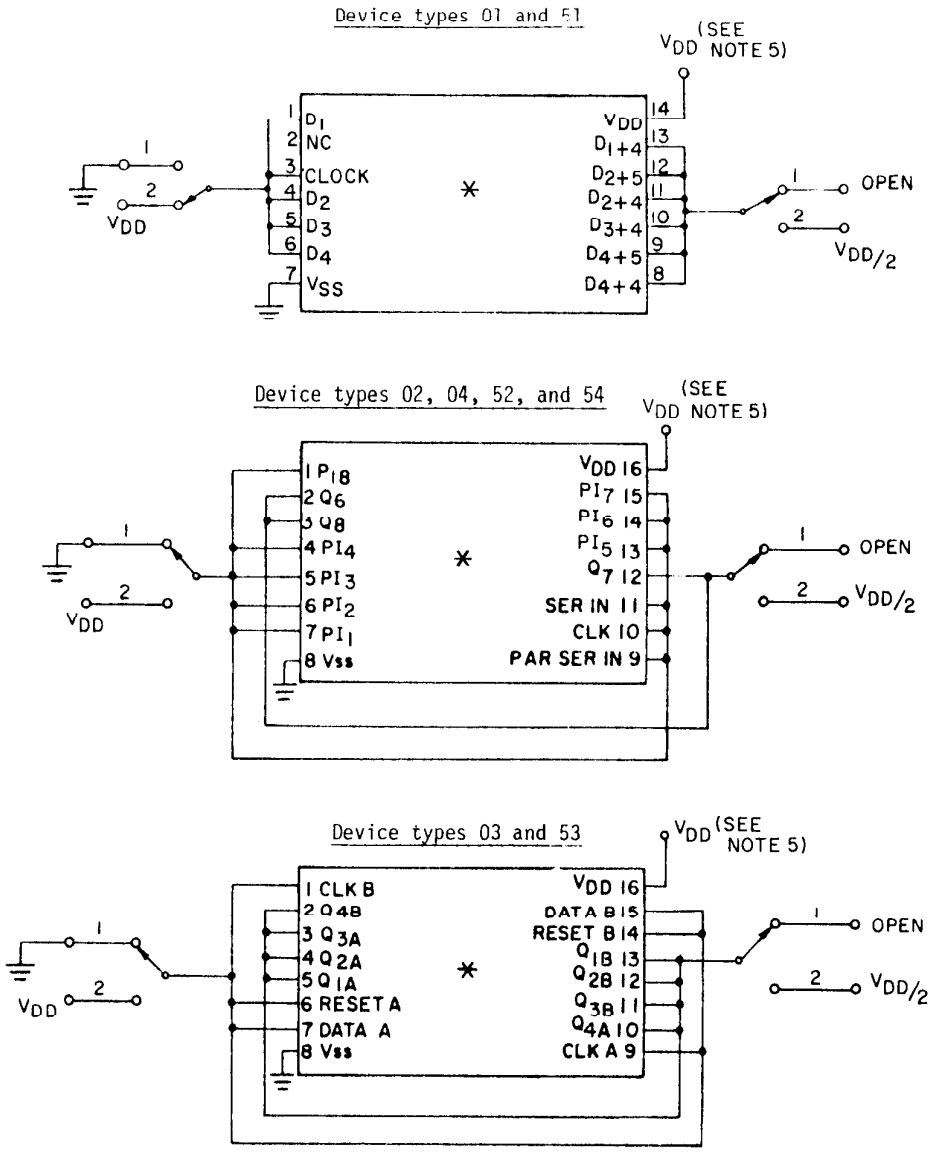

FIGURE 4. Static burn-in test circuits.

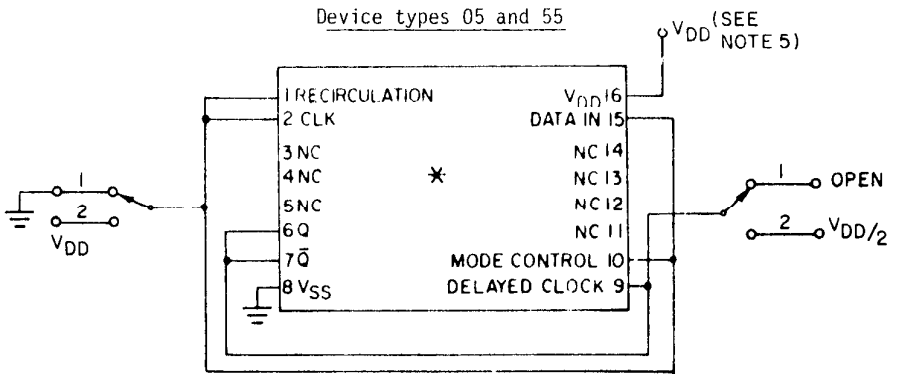

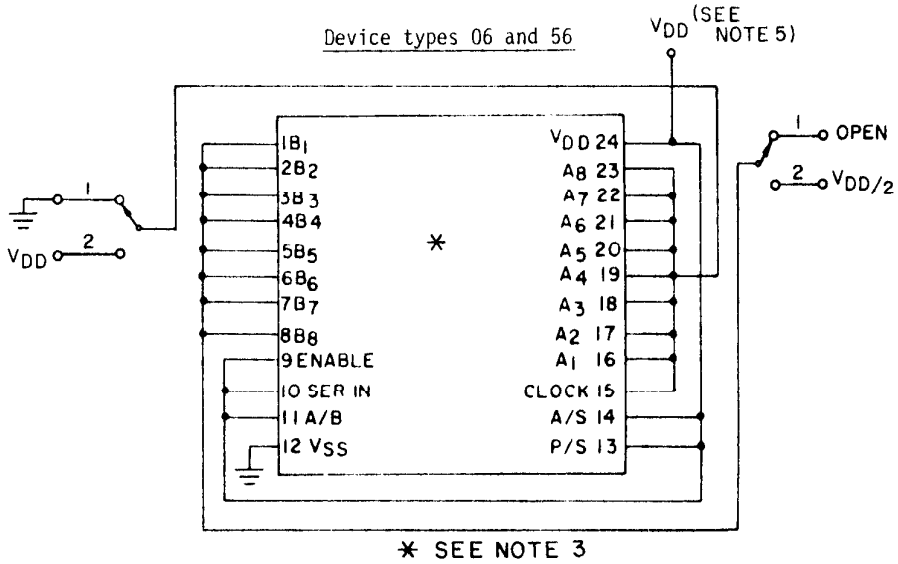

NOTES:
1. For static burn-in I, all inputs are connected to 0 volts, switch position 1.
2. For static burn-in II, all inputs are connected to V_{DD}, switch position 2.
3. Except for V_{DD} and V_{SS}, terminals shall be connected through resistors of 2 kΩ to 47 kΩ. The actual measured value of the resistors selected shall not exceed ±20 percent of its branded value due to use, heat or age.
4. Output may be in switch position 1 or 2.
5. V_{DD} = 12.5 V minimum, 15.0 V maximum for device types 01 through 06.
   V_{DD} = 15.0 V minimum, 18.0 V maximum for device types 51 through 56.
   $V_{DD}/2$ = $V_{DD}/2$ ±1.0 V for all devices.
   V_{SS} = 0.0 V.

FIGURE 4. Static burn-in test circuit - Continued.

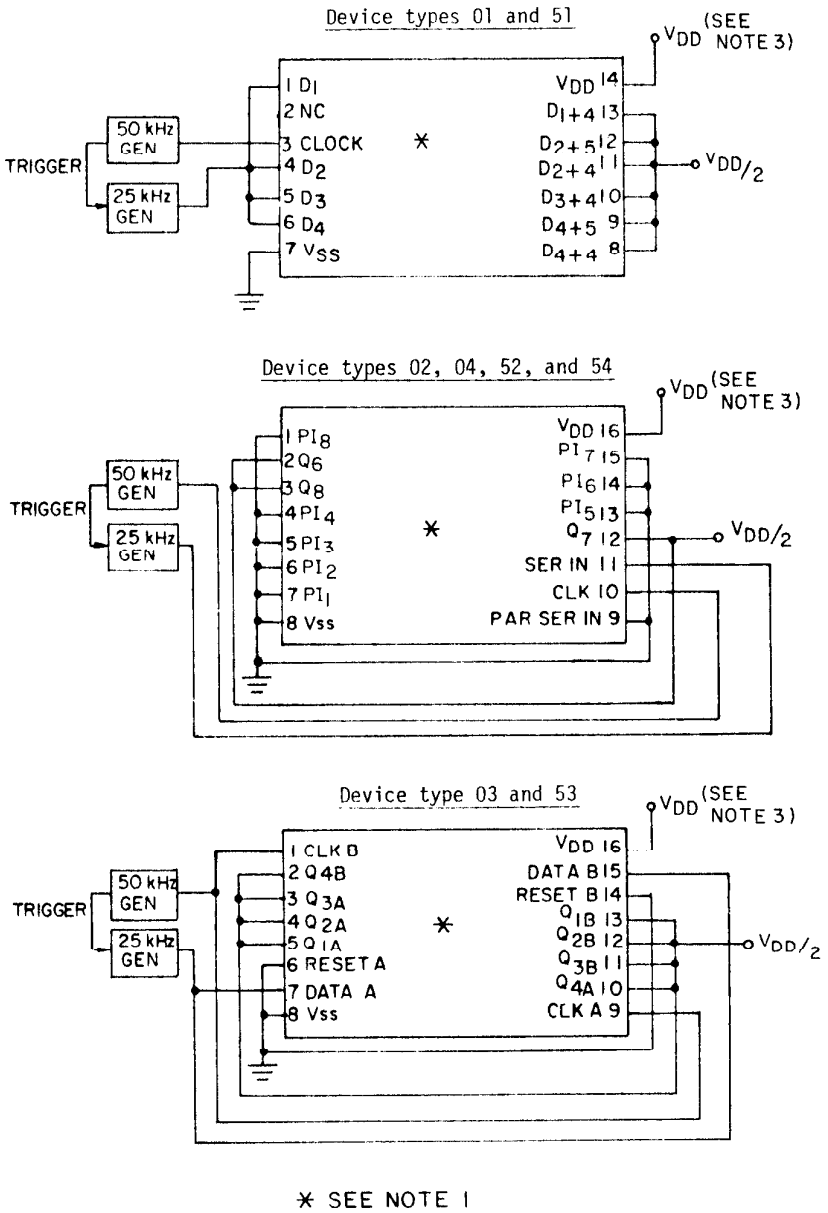

FIGURE 5. Dynamic burn-in and steady-state life test circuit.

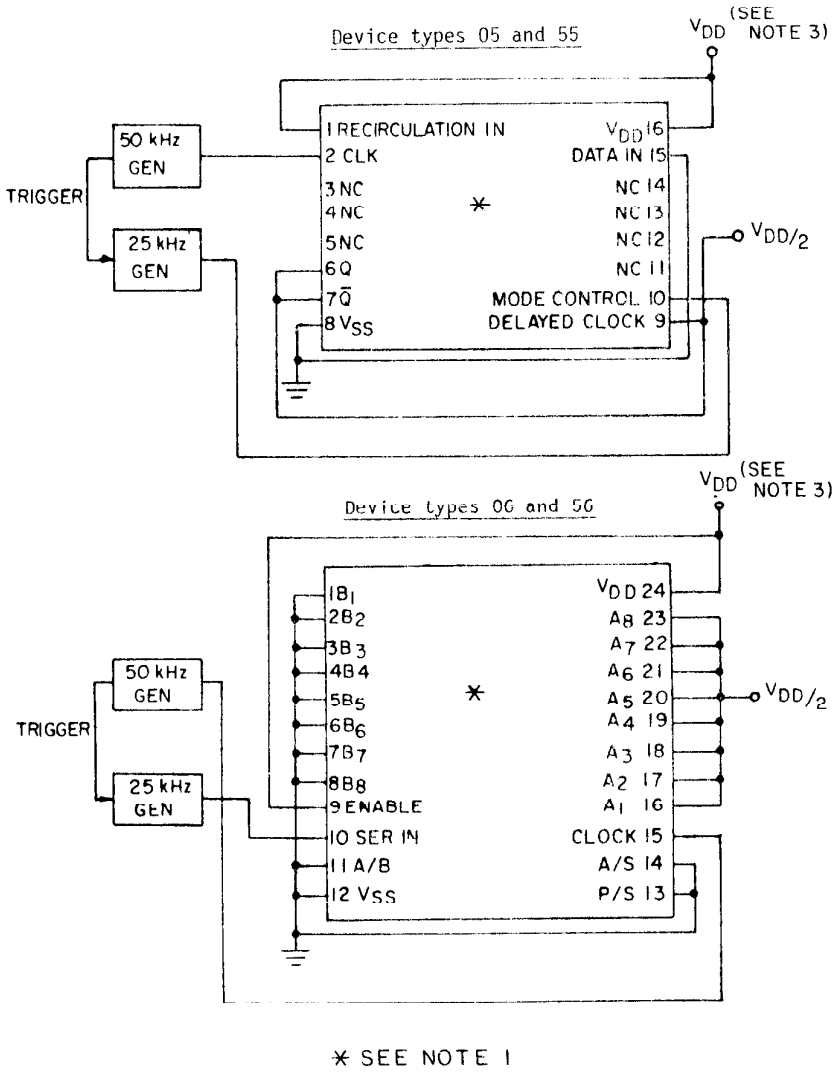

FIGURE 5. Dynamic burn-in and steady-state life test circuit - Continued.

NOTES:

1. Except for V_{DD} and V_{SS}, terminals shall be connected through resistors of 2 kΩ to 47 kΩ. The actual measured value of the resistors selected shall not exceed ±20 percent of its branded value due to use, heat or age.
2. Input signal requirements:
   a. Square wave, 50 percent duty cycle.
   b. 25 kHz < PRR < 1 MHz.
   c. t_{TLH} and t_{THL} < 1 μs.
   d. Voltage level:
      Minimum = V_{SS} -0.5 V, ±10 percent V_{DD}.
      Maximum = V_{DD} +0.5, -10 percent V_{DD}.
3. V_{DD} = 12.5 V minimum, 15.0 V maximum for device types 01 through 06.
   V_{DD} = 15.0 V minimum, 18.0 V maximum for device types 51 through 56.
   $V_{DD}/2$ - $V_{DD}/2$ ±1.0 V.
   V_{SS} = 0.0 V.

FIGURE 5. Dynamic burn-in and steady state life test circuit - Continued.

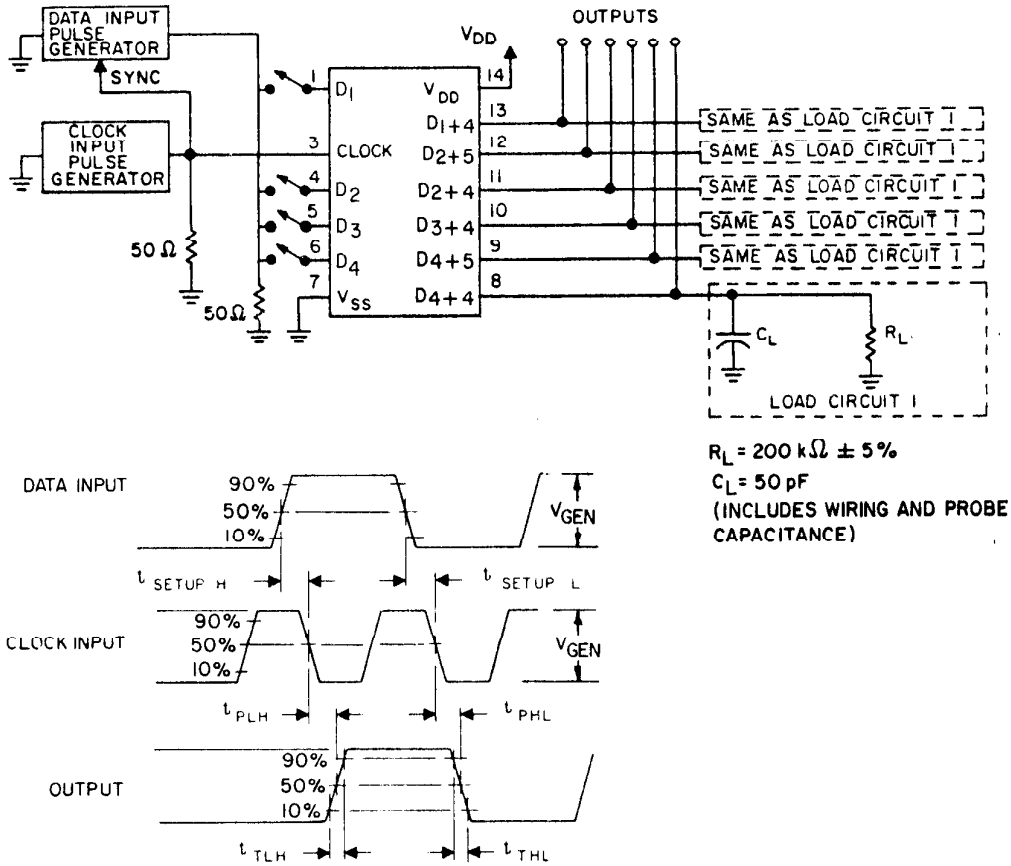

NOTES:

1. The pulse generators have the following characteristics: $V_{GEN} = V_{DD} \pm 1$ percent. t_f and $t_r \leq 20$ ns. duty cycle = 50 percent. $Z_{OUT} = 50$ ohms.
2. $t_{SETUPH} = t_{SETUPL} = 80$ ns at $T_A = 25°C$ and $-55°C$; = 115 ns at $T_A = 125°C$.
3. Requirements for MAX clock frequency (f_{CL}) are established by setting the parameter to the limits given in table III and observing proper output state changes.
4. Initially apply clock input pulses with data inputs low and set all outputs low.

FIGURE 6. Switching times test circuit and waveforms for device types 01 and 51.

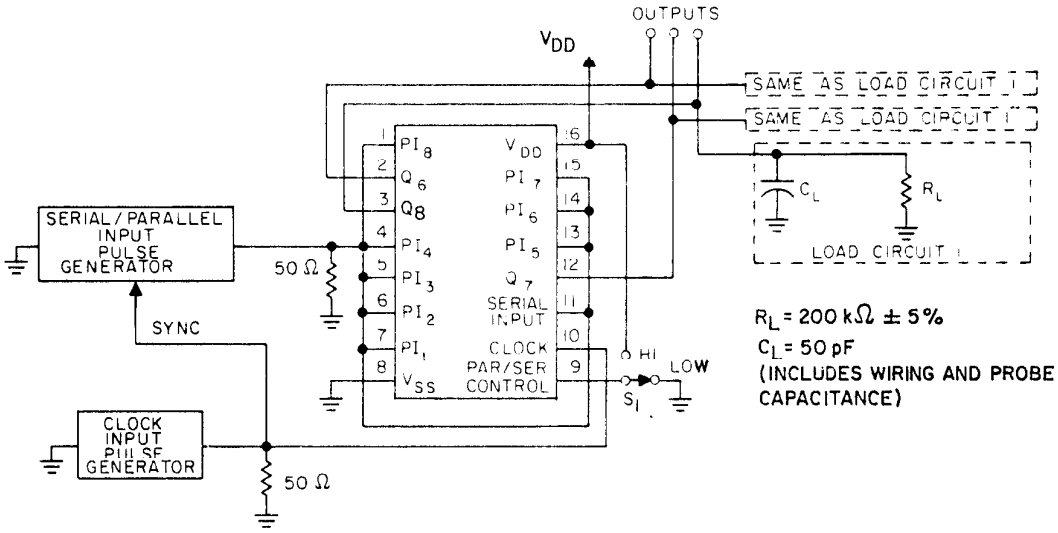

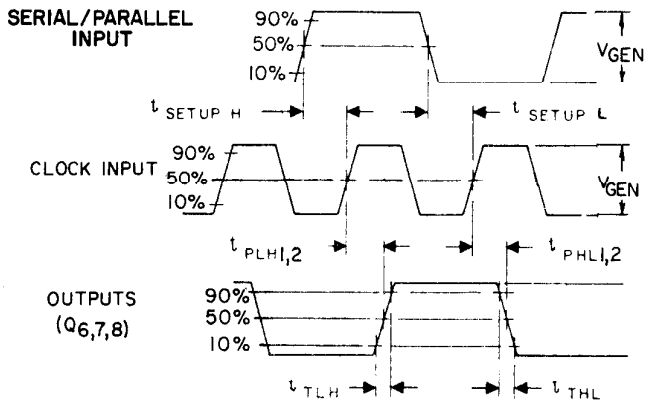

NOTES:

1. The pulse generators have the following characteristics: $V_{GEN} = V_{DD} \pm 1$ percent, t_f and $t_r \leq 20$ ns, duty cycle = 50 percent, $Z_{OUT} = 50$ ohms.
2. When measuring t_{PHL1} and t_{PLH1}, set parallel serial control switch S_1 to "LOW". Initially apply clock pulse with serial/parallel inputs at 0 V to set outputs low.
3. When measuring t_{PHL2}, t_{PLH2}, t_{THL}, and t_{TLH}, set parallel serial control switch S_1 to "HI". Initially apply clock pulses with serial/parallel inputs at 0 V to set outputs low.
4. $t_{SETUPH} = t_{SETUPL} = 350$ ns at $T_A = 25°C$ and -55°C; = 500 ns at 125°C. For device type 02, $t_{SETUPH} = t_{SETUPL} = 130$ ns at $T_A = 25°C$ and -55°C; = 180 ns at $T_A = 125°C$.
5. Requirements for MAX clock frequency (f_{CL}) are established by setting the parameter to the limits given in table III and observing proper output state changes.

FIGURE 7. Switching time test circuit and waveforms for device types 02 and 52.

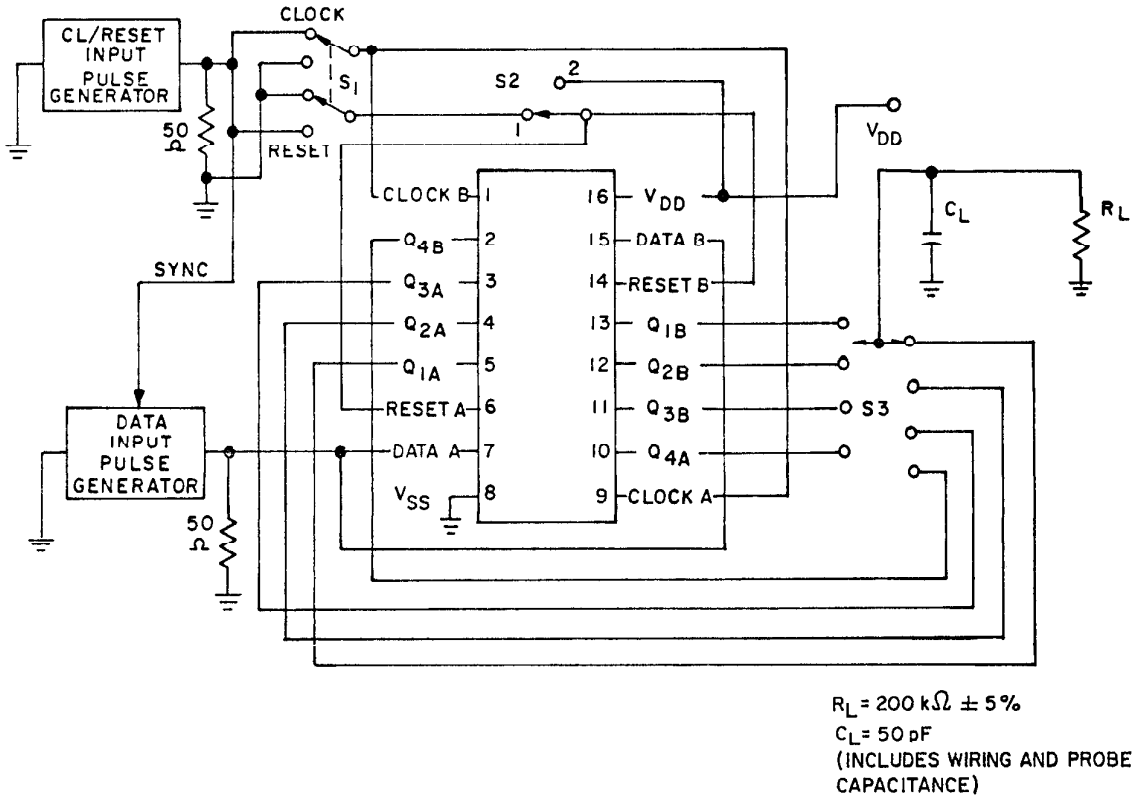

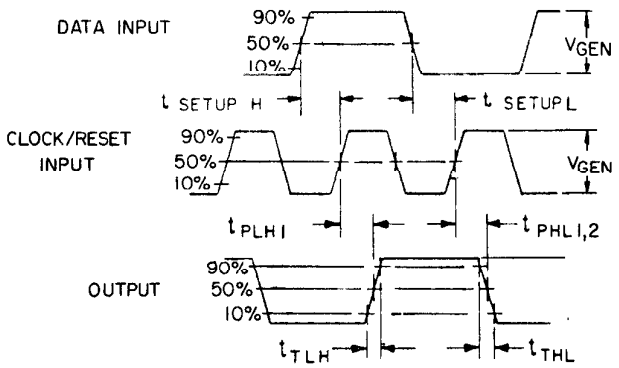

FIGURE 8. Switching time test circuit and waveforms for device types 03 and 53.

NOTES:

1. The pulse generators have the following characteristics: $V_{GEN} = V_{DD} \pm 1$ percent, t_r and $t_f \leq 20$ ns, duty cycle = 50 percent, $Z_{OUT} = 50$ ohms.
2. When measuring t_{PHL1}, t_{PLH1} t_{THL}, and t_{TLH1}, set switch S_1 to clock position. Momentarily set switch S_2 to position 2 to set outputs low and return to position 1.
3. When measuring t_{PHL2}, set switch S_2 to reset position. Momentarily set switch S_2 to position 2 to set outputs low and return to position 1.
4. $t_{SETUPH} = t_{SETUPL}$ = 300 ns at T_A = -55°C and 25°C; = 500 ns at T_A = 125°C. For device types 03 and 53, $t_{SETUPH} = t_{SETUPL}$ = 100 ns at T_A = -55°C and 25°C; = 150 ns at T_A = 125°C.
5. For f_{CL}, set switch S_1 to clock. Requirements for MAX clock frequency (f_{CL}) are established by setting the parameter to the limits given in table III and observing proper output state changes.

FIGURE 8. Switching time test circuit and waveforms for device types 03 and 53 - Continued.

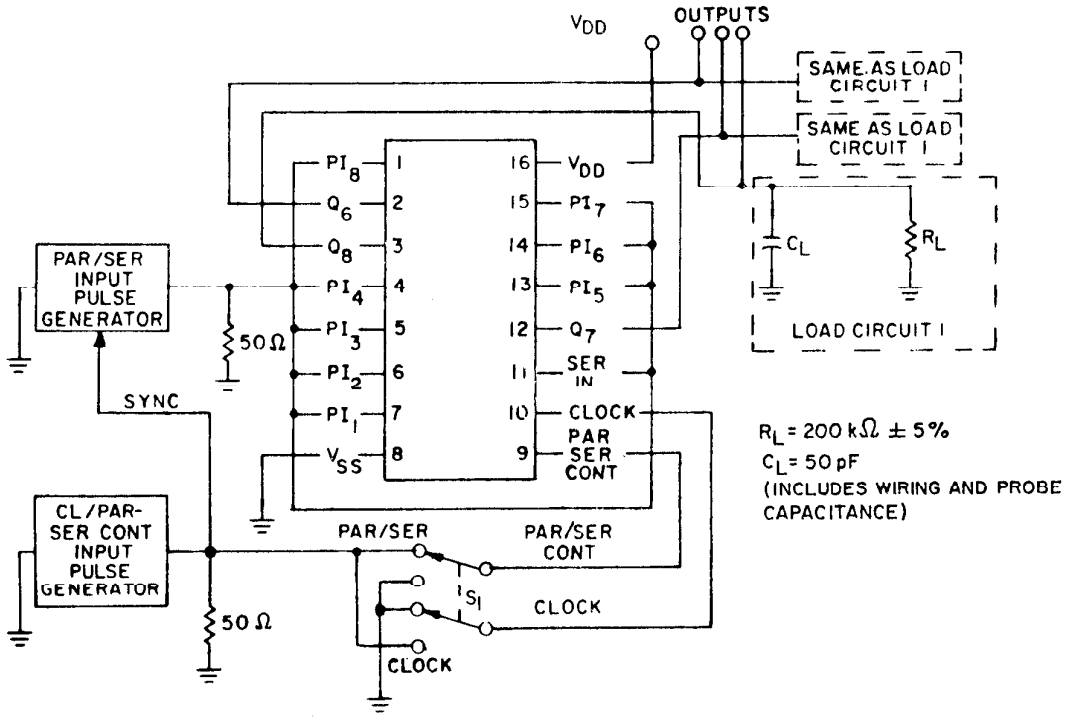

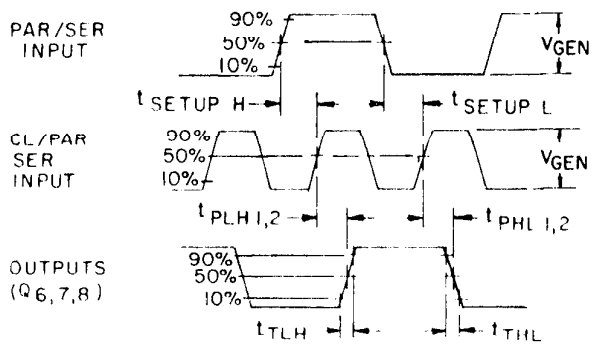

FIGURE 9. Switching time test circuit and waveforms for device types 04 and 54.

NOTES:

1. The pulse generators have the following characteristics: $V_{GEN} = V_{DD} \pm 1$ percent, t_r and $t_f \leq 20$ ns, duty cycle = 50 percent, $Z_{OUT} = 50$ ohms.
2. When measuring t_{PHL1}, t_{PLH1}, set switch S_1 to parallel/serial position.
3. When measuring t_{PHL2}, t_{PLH2} t_{THL}, and t_{TLH}, set switch S_1 to clock position.
4. $t_{SETUPH} = t_{SETUPL} = 350$ ns at $T_A = -55°C$ and 25°C; = 500 ns at $T_A = 125°C$. For device types 04 and 54, $t_{SETUPH} = t_{SETUPL}$ = 130 ns at $T_A = -55°C$ and 25°C; = 180 ns at $T_A = 125°C$.
5. For f_{CL}, set switch S_1 to clock. Requirements for MAX clock frequency (f_{CL}) are established by setting the parameter to the limits given in table III and observing proper output state changes.

FIGURE 9. Switching time test circuit and waveforms for device types 04 and 54 - Continued.

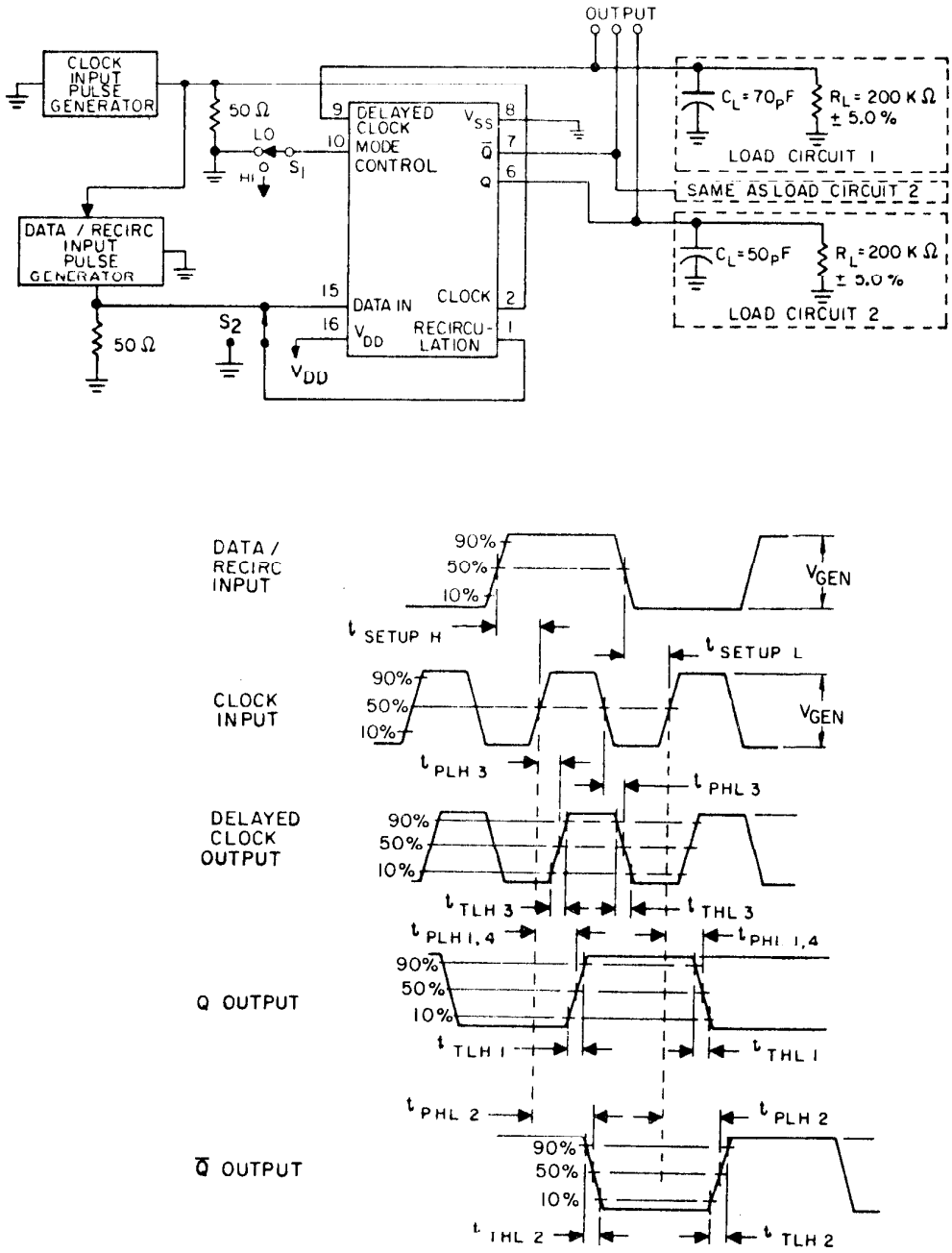

FIGURE 10. Switching time test circuit and waveforms for device types 05 and 55.

NOTES:

1. The pulse generators have the following characteristics: $V_{GEN} = V_{DD} \pm 1$ percent, t_r and $t_f \leq 20$ ns, duty cycle = 50 percent, $Z_{OUT} = 50$ ohms.
2. When measuring t_{PHL1}, t_{PHL2} t_{PHL2}, t_{PHL3}, t_{PLH1}, t_{PLH2}, t_{PLH3}, t_{THL1}, t_{THL2}, t_{THL3}, t_{TLH1}, t_{TLH2}, and t_{TLH3}, set switch S_1 to low position.
3. When measuring t_{PHL4} and t_{PLH4}, set switch S_2 to high position.
4. $t_{SETUPH} = t_{SETUPL} = 400$ ns at $T_A = -55°C$ and $25°C$; = 680 ns at $T_A = 125°C$. For device types 05 and 55, $t_{SETUPH} = t_{SETUPL} = 215$ ns at $T_A = -55°C$ and $25°C$; = 300 ns at $T_A = 125°C$.
5. For f_{CL}, set switch S_1 to low position. Requirements for MAX clock frequency (f_{CL}) are established by setting the parameter to the limits given in table III and observing proper output state changes.

FIGURE 10. Switching time test circuit and waveforms for device types 05 and 55 - Continued.

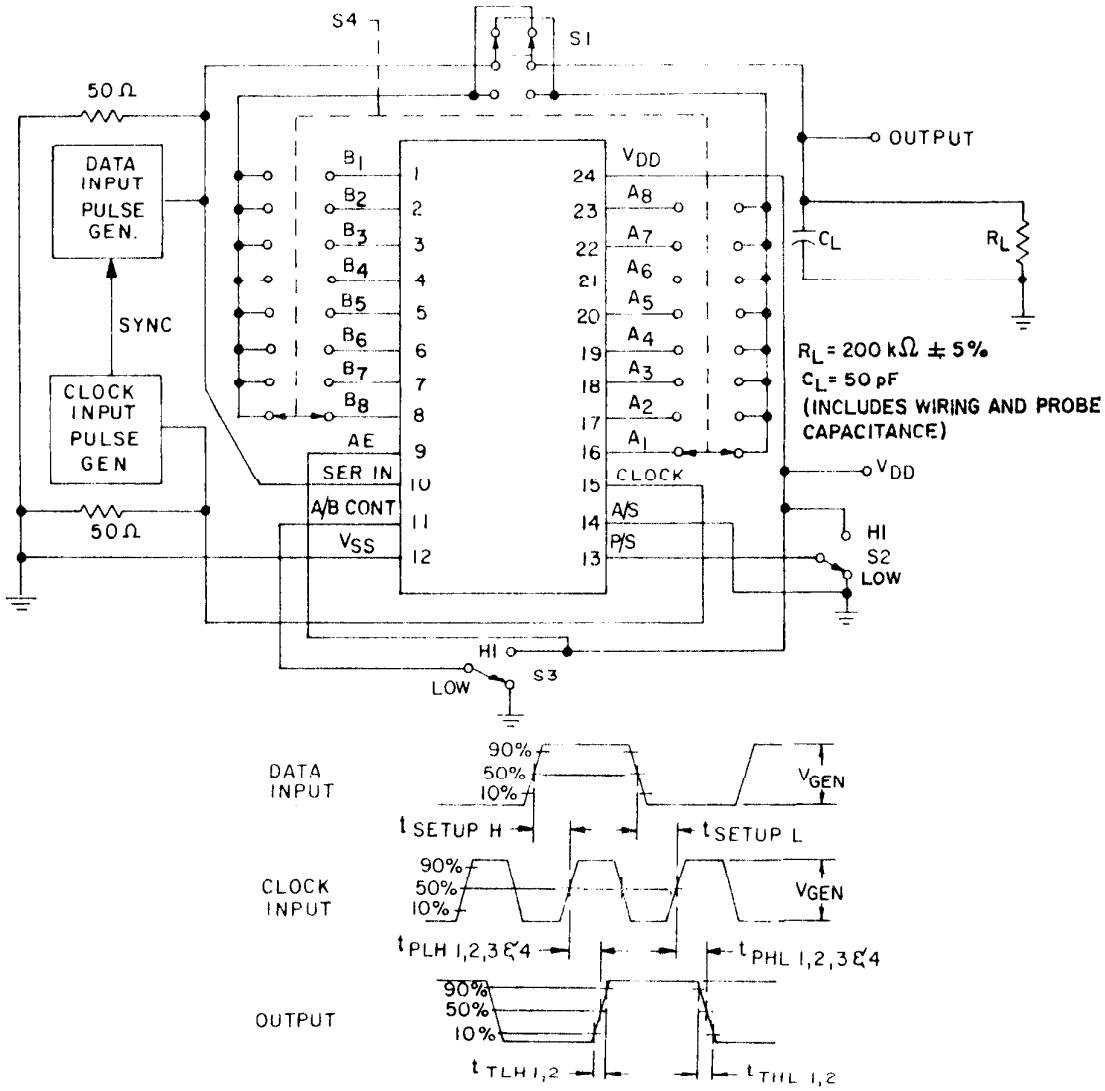

NOTES:

1. The pulse generators have the following characteristics: $V_{GEN} = V_{DD} \pm 1$ percent, t_r and $t_f \leq 20$ ns, duty cycle = 50 percent, $Z_{OUT} = 50$ ohms.
2. When measuring t_{PHL1}, t_{PLH1}, t_{THL1}, and t_{TLH1}, set switch S_2 and S_3 to high position.
3. When measuring t_{PHL3}, t_{PLH2}, t_{THL2}, and t_{PTH2}, set switch S_2 to high position and S_3 to low position.
4. When measuring t_{PHL3}, t_{PLH3}, set switch S_2 to low position and S_3 to high position.
5. When measuring t_{PHL4}, t_{PLH4}, set switch S_2 to low position and S_3 to low position.
6. $t_{SETUPH} = t_{SETUPL}$ = 500 ns at T_A = -55°C and 25°C; = 650 ns at T_A = 125°C. For device types 06 and 56, $t_{SETUPH} = t_{SETUPL}$ = 172 ns at T_A = -55°C and 25°C; = 240 ns at T_A = 125°C.
7. For f_{CL}, set switch S_2 to low position and S_3 to low position and then the high position. Requirements for MAX clock frequency (f_{CL}) are established by setting the parameter to the limits given in table III and observing proper output state changes.

FIGURE 11. Switching time test circuit and waveforms for device types 06 and 56 - Continued.

TABLE III. Group A inspection for device type 01.

Symbol	MIL-STD-883 method	Cases A, C, D, X, Y Symbol	Test no.	Terminal conditions and limits 1/: D_1 (1)	NC (2)	Clock (3)	D_2 (4)	D_3 (5)	D_4 (6)	V_{SS} (7)	D_{4+4} (8)	D_{4+5} (9)	D_{3+4} (10)	D_{2+4} (11)	D_{2+5} (12)	D_{1+4} (13)	V_{DD} (14)	Measured terminal	Test limits: Subgroup 1 T_C = 25°C Min	Subgroup 1 Max	Subgroup 2 T_C = 125°C Min	Subgroup 2 Max	Subgroup 3 T_C = -55°C Min	Subgroup 3 Max	Unit
V_{IC} (pos)			1	1 mA													GND	D_1		1.5					V
			2			1 mA											"	Clock		"					"
			3				1 mA										"	D_2		"					"
			4					1 mA									"	D_3		"					"
			5						1 mA								"	D_4		"					"
V_{IC} (neg)			6	-1 mA						GND								D_1		-6					"
			7			-1 mA				"								Clock		"					"
			8				-1 mA			"								D_2		"					"
			9					-1 mA		"								D_3		"					"
			10						-1 mA	"								D_4		"					"
I_{SS} 2/	3005		11	GND		3/	GND	GND	GND	"							15.0 V	None		-0.3		-3.0			μA
			12	15.0 V		"	15.0 V	15.0 V	15.0 V	"							"	"		"		"			"
			13	GND		"	GND	GND	GND	"							"	"		"		"			"
			14	15.0 V		"	15.0 V	15.0 V	15.0 V	"							"	"		"		"			"
			15	GND		"	GND	GND	GND	"							"	"		"		"			"
			16	15.0 V		GND	15.0 V	15.0 V	15.0 V	"							"	V_{SS}		"		"			"
			17	15.0 V		15.0 V	15.0 V	15.0 V	15.0 V	"							"	V_{SS}		"		"			"
			18	15.0 V		GND	15.0 V	15.0 V	15.0 V	"							"	None		"		"			"
			19	GND		GND	GND	GND	GND	"							"	V_{SS}		"		"			"
V_{OH1}	3006		20	V_{IH1} 4/		5/	V_{IH1} 4/	V_{IH1} 4/	V_{IH1} 4/	"	I_{OH} 6/	I_{OH} 6/	I_{OH} 6/	I_{OH} 6/	I_{OH} 6/	I_{OH} 6/	5.0 V	D_{4+4}	4.5		4.5		4.5		V
			21	"		"	"	"	"	"							"	D_{4+5}		"		"			"
			22	"		"	"	"	"	"							"	D_{3+4}		"		"			"
			23	"		"	"	"	"	"							"	D_{2+4}		"		"			"
			24	"		"	"	"	"	"							"	D_{2+5}		"		"			"
			25	"		"	"	"	"	"							"	D_{1+4}		"		"			"
V_{OH2}			26	V_{IH2} 7/		"	V_{IH2} 7/	V_{IH2} 7/	V_{IH2} 7/	"							12.5 V	D_{4+4}	11.25		11.25		11.25		"
			27	"		"	"	"	"	"							"	D_{4+5}		"		"			"
			28	"		"	"	"	"	"							"	D_{3+4}		"		"			"
			29	"		"	"	"	"	"							"	D_{2+4}		"		"			"
			30	"		"	"	"	"	"							"	D_{2+5}		"		"			"
			31	"		"	"	"	"	"							"	D_{1+4}		"		"			"
V_{OL1}	3007		32	V_{IL1} 8/		"	V_{IL1} 8/	V_{IL1} 8/	V_{IL1} 8/	"	I_{OL} 9/	I_{OL} 9/	I_{OL} 9/	I_{OL} 9/	I_{OL} 9/	I_{OL} 9/	5.0 V	D_{4+4}		0.5		0.5		0.5	"
			33	"		"	"	"	"	"							"	D_{4+5}		"		"			"
			34	"		"	"	"	"	"							"	D_{3+4}		"		"			"
			35	"		"	"	"	"	"							"	D_{2+4}		"		"			"
			36	"		"	"	"	"	"							"	D_{2+5}		"		"			"
			37	"		"	"	"	"	"							"	D_{1+4}		"		"			"
V_{OL2}			38	V_{IL2} 10/		"	V_{IL2} 10/	V_{IL2} 10/	V_{IL2} 10/	"							12.5 V	D_{4+4}		1.25		1.25		1.25	"
			39	"		"	"	"	"	"							"	D_{4+5}		"		"			"
			40	"		"	"	"	"	"							"	D_{3+4}		"		"			"
			41	"		"	"	"	"	"							"	D_{2+4}		"		"			"
			42	"		"	"	"	"	"							"	D_{2+5}		"		"			"
			43	"		"	"	"	"	"							"	D_{1+4}		"		"			"
I_{IH1} 11/	3010		44	15.0 V		15.0 V	15.0 V	15.0 V	15.0 V	"							15.0 V	All inputs together		5.0					μA
I_{IH2}			45	15.0 V		GND	GND	GND	GND	"							"	D_1		1.0		4			"
			46	GND		15.0 V	GND	GND	"	"							"	Clock		"		"			"
			47	"		GND	15.0 V	GND	"	"							"	D_2		"		"			"
			48	"		GND	GND	15.0 V	"	"							"	D_3		"		"			"
			49	"		GND	GND	GND	15.0 V	"							"	D_4		"		"			"

See footnotes at end of device type 01.

TABLE III. Group A inspection for device type 01 - Continued.

Symbol	MIL-STD-883 method	Cases A, C, D, X, Y Symbol	Terminal conditions and limits 1/															Measured terminal	Test limits						Unit
			D_1	NC	Clock	D_2	D_3	D_4	V_{SS}	D_{4+4}	D_{4+5}	D_{3+4}	D_{2+4}	D_{2+5}	D_{1+4}	V_{DD}		Subgroup 1 $T_C = 25°C$		Subgroup 2 $T_C = 125°C$		Subgroup 3 $T_C = -55°C$		
		Test no.	1	2	3	4	5	6	7	8	9	10	11	12	13	14		Min	Max	Min	Max	Min	Max	
I_{IL} 11/	3009	50	GND		GND	GND	GND	GND	GND							15.0	All inputs together		-5.0					mA
I_{IL2}		51	"		"	"	"	"	"							"	D_1		-1.0		-10			"
		52	"		"	"	"	"	"							"	Clock		"		"			"
		53	"		"	"	"	"	"							"	D_2		"		"			"
		54	"		"	"	"	"	"							"	D_3		"		"			"
		55	"		"	"	"	"	"							"	D_4		"		"			"
																		Subgroup 4 $T_C = 25°C$ Min	Max					
C_{IN}	3012	56	12/						GND							GND	D_1		12					pF
		57			12/				"							"	Clock		20					"
		58				12/			"							"	D_2		12					"
		59					12/		"							"	D_3		12					"
		60						12/	"							"	D_4		12					"
																		Subgroup 7 $T_C = 25°C$ Min	Max	Subgroup 8 $T_C = 125°C$ Min	Max	Subgroup 9 $T_C = -55°C$ Min	Max	
Truth table test	3014 13/	61	GND		14/	GND	GND	GND	GND							5.0 V	None	See 15/, 16/						
		62	5.0 V			5.0 V	5.0 V	5.0 V	"							"	None							
		63	"		"	GND	GND	GND	"							"	None							
		64	"		"	"	"	"	"							"	All outputs							
		65	"		GND	"	"	"	"	"		"	"		"	"								
		66	"		GND	"	"	"	"	"		"	"		"	"								
		67	"		GND	"	"	"	"	"		"	"		"	"								
		68	5.0 V		5.0 V	5.0 V	5.0 V	5.0 V	"	"		"	"		"	"								
		69	"		"	"	"	"	"	"		"	"		"	"								
		70	"		"	"	"	"	"	"		"	"		"	"								
		71	"		"	"	"	"	"	"		"	"		"	"								
		72	"		GND	"	"	"	"	H	L	H	H	L	H	"								
		73	"		5.0 V	"	"	"	"	H	L	H	H	L	H	"								
		74	"		GND	"	"	"	"	L	H	L	L	H	L	"								
		75	"		5.0 V	"	"	"	"	L	H	L	L	H	L	"								
		76	"		GND	"	"	"	"	L	L	L	L	L	L	"								
																		Subgroup 9 $T_C = 25°C$ Min	Max	Subgroup 10 $T_C = 125°C$ Min	Max	Subgroup 11 $T_C = -55°C$ Min	Max	
t_{PHL}	3003 Fig.8	77			IN			IN	GND	OUT						5.0 V	Clock to D_{4+1}	20	800	30	1200	20	800	ns
		78			"			IN	"		OUT					"	Clock to D_{4+5}	"	"	"	"	"	"	"
		79			"		IN		"			OUT				"	Clock to D_{3+1}	"	"	"	"	"	"	"
		80			"	IN			"				OUT			"	Clock to D_{2+1}	"	"	"	"	"	"	"
		81			"	IN			"					OUT		"	Clock to D_{2+5}	"	"	"	"	"	"	"
		82	IN		"				"						OUT	"	Clock to D_{1+1}	"	"	"	"	"	"	"

See footnotes at end of device type 01.

TABLE III. Group A inspection for device type 01 - Continued.

Symbol	MIL-STD-883 Method	Cases A C,D,X,Y Symbol	Terminal conditions and limits 1/ D_1	NC	Clock	D_2	D_3	D_4	V_{SS}	D_{4+4}	D_{4+5}	D_{3+4}	D_{2+4}	D_{2+5}	D_{1+4}	V_{DD}	Measured terminal	Test limits Subgroup 1 T_C = 25°C Min	Subgroup 1 Max	Subgroup 2 T_C = 125°C Min	Subgroup 2 Max	Subgroup 3 T_C = -55°C Min	Subgroup 3 Max	Unit
		Test no.	1	2	3	4	5	6	7	8	9	10	11	12	13	14								
t_{PLH}	3003 Fig.8	83			IN			IN	GND	OUT						5.0 V	Clock to D_{4+4}	20	600	30	975	20	650	ns
		84			"			IN	"		OUT					"	Clock to D_{4+5}	"	"	"	"	"	"	"
		85			"		IN		"			OUT				"	Clock to D_{3+4}	"	"	"	"	"	"	"
		86			"	IN			"				OUT			"	Clock to D_{2+4}	"	"	"	"	"	"	"
		87			"	IN			"					OUT		"	Clock to D_{2+5}	"	"	"	"	"	"	"
		88	IN		"				"						OUT	"	Clock to D_{1+4}	"	"	"	"	"	"	"
t_{THL}	3004 Fig.9	89			"			IN	"	OUT						"	D_{4+4}	13	740	18	1140	13	760	"
		90			"			IN	"		OUT					"	D_{4+5}	"	"	"	"	"	"	"
		91			"		IN		"			OUT				"	D_{3+4}	"	"	"	"	"	"	"
		92			"	IN			"				OUT			"	D_{2+4}	"	"	"	"	"	"	"
		93			"	IN			"					OUT		"	D_{2+5}	"	"	"	"	"	"	"
		94	IN		"				"						OUT	"	D_{1+4}	"	"	"	"	"	"	"
t_{TLH}		95			"			IN	"	OUT						"	D_{4+4}	"	"	"	"	"	"	"
		96			"			IN	"		OUT					"	D_{4+5}	"	"	"	"	"	"	"
		97			"		IN		"			OUT				"	D_{3+4}	"	"	"	"	"	"	"
		98			"	IN			"				OUT			"	D_{2+4}	"	"	"	"	"	"	"
		99			"	IN			"					OUT		"	D_{2+5}	"	"	"	"	"	"	"
		100	IN		"				"						OUT	"	D_{1+4}	"	"	"	"	"	"	"
f_{CL} (max) 17/		101			"			IN	"	OUT						"	Clock		1.0		1.4		1.0	μs
		102			"			IN	"		OUT					"	"		"		"		"	"
		103			"		IN		"			OUT				"	"		"		"		"	"
		104			"	IN			"				OUT			"	"		"		"		"	"
		105			"	IN			"					OUT		"	"		"		"		"	"
		106	IN		"				"						OUT	"	"		"		"		"	"

1/ Terminals not designated may be "HIGH" level logic, "LOW" level logic or open except as follows:
$V_{IC(pos)}$ tests; the V_{SS} terminal shall be open.
$V_{IC(neg)}$ tests; the V_{DD} terminal shall be open.
I_{SS} tests; the output terminals shall be open.
2/ Test numbers 11 through 19 shall be run in sequence. See 4.5.4
3/ Apply single clock pulse; V_{IN} = 0 V to V_{DD}.
4/ V_{IH1} = 3.8 V at 25°C, 3.6 V at 125°C, 3.95 V at -55°C.
5/ Apply clock pulse; V_{IN} = 0 V to V_{DD} until proper output state is achieved.
6/ I_{OH} = -100 μA at 25°C, -70 μA at 125°C, -125 μA at -55°C.
7/ V_{IH2} = 9.5 V at 25°C, 9.25 V at 125°C, 9.75 V at -55°C.
8/ V_{IL1} = 1.1 V at 25°C, 0.85 V at 125°C, 1.35 V at -55°C.
9/ I_{OL} = 125 μA at 25°C, 85 μA at 125°C, 165 μA at -55°C.
10/ V_{IL2} = 2.8 V at 25°C, 2.55 V at 125°C, 3.05 V at -55°C.
11/ The device manufacturer may, at his option, measure I_{IL} and I_{IH} at 25°C for each individual input or measure all inputs together.
12/ See 4.4.1c.
13/ Test numbers 61 through 76 shall be run in sequence.
14/ Apply single clock pulse; V_{IN} = 0 V to V_{DD}.
15/ The output voltage limits for each temperature are "H" = V_{DD} -0.5 V min. and "L" = V_{SS} +0.5 V max.
16/ The functional tests shall be performed at V_{IH} and V_{DD} ≤5.0 V and ≥15 V.
17/ The maximum clock frequency (f_{CL}) requirement is considered met if proper output state changes occur with the pulse repetition period set to that given in the limits column.

TABLE III. Group A inspection for device type 02.

Symbol	MIL-STD-883 method	Cases E,F,Z Test no.	Terminal conditions and limits 1/ P_{I8} 1	Q_6 2	Q_8 3	P_{I4} 4	P_{I3} 5	P_{I2} 6	P_{I1} 7	V_{SS} 8	P/S control 9	Clock 10	Serial In 11	Q_7 12	P_{I5} 13	P_{I6} 14	P_{I7} 15	V_{DD} 16	Measured terminal	Test limits Subgroup 1 T_C=25°C Min	Subgroup 1 Max	Subgroup 2 T_C=125°C Min	Subgroup 2 Max	Subgroup 3 T_C=-55°C Min	Subgroup 3 Max	Unit
V_{IC} (pos)		1	1 mA															GND	P_{I8}		1.5					V
		2				1 mA												"	P_{I4}		"					"
		3					1 mA											"	P_{I3}		"					"
		4						1 mA										"	P_{I2}		"					"
		5							1 mA									"	P_{I1}		"					"
		6									1 mA							"	P/S control		"					"
		7										1 mA						"	Clock		"					"
		8											1 mA					"	Serial In		"					"
		9													1 mA			"	P_{I5}		"					"
		10														1 mA		"	P_{I6}		"					"
		11															1 mA	"	P_{I7}		"					"
V_{IC} (neg)		12	-1 mA							GND									P_{I8}		-6					"
		13				-1 mA				"									P_{I4}		"					"
		14					-1 mA			"									P_{I3}		"					"
		15						-1 mA		"									P_{I2}		"					"
		16							-1 mA	"									P_{I1}		"					"
		17								"	-1 mA								P/S control		"					"
		18								"		-1 mA							Clock		"					"
		19								"			-1 mA						Serial In		"					"
		20								"					-1 mA				P_{I5}		"					"
		21								"						-1 mA			P_{I6}		"					"
		22								"							-1 mA		P_{I7}		"					"
I_{SS} 2/	3005	23	GND			GND	15.0 V	GND	15.0 V	"	15.0 V	15.0 V	GND		15.0 V	GND	15.0 V	15.0 V	None		-0.5		-5.0			μA
		24	GND			GND	15.0 V	GND	15.0 V	"	"	GND	GND		15.0 V	GND	15.0 V	"	"		"		"			"
		25	GND			GND	15.0 V	GND	15.0 V	"	"	15.0 V	GND		15.0 V	GND	15.0 V	"	"		"		"			"
		26	15.0 V			15.0 V	GND	15.0 V	GND	"	"	15.0 V	15.0 V		GND	15.0 V	GND	"	"		"		"			"
		27	"			"	"	"	"	"	"	GND	"		"	"	"	"	V_{SS}		"		"			"
		28	"			"	"	"	"	"	"	15.0 V	"		"	"	"	"	None		"		"			"
		29	"			"	"	"	"	"	GND	15.0 V	"		"	"	"	"	V_{SS}		"		"			"
		30	"			"	"	"	"	"	"	GND	"		"	"	"	"	None		"		"			"
		31	"			"	"	"	"	"	"	15.0 V	"		"	"	"	"	None		"		"			"
		32	GND			GND	15.0 V	GND	15.0 V	"	"	15.0 V	GND		15.0 V	GND	15.0 V	"	V_{SS}		"		"			"
V_{OH1}	3006	33	V_{IH1} 3/	I_{OH} 4/		V_{IH1} 3/	V_{IH1} 3/	V_{IH1} 3/	V_{IH1} 3/	"	V_{IH1} 3/	5/	V_{IH1} 3/		V_{IH1} 3/	V_{IH1} 3/	V_{IH1} 3/	15.0 V	Q_6	4.5		4.5		4.5		V
		34	V_{IH1} 3/			V_{IH1} 3/	V_{IH1} 3/	V_{IH1} 3/	V_{IH1} 3/	"	V_{IH1} 3/	"	V_{IH1} 3/	I_{OH} 4/	V_{IH1} 3/	V_{IH1} 3/	V_{IH1} 3/	15.0 V	Q_7	4.5		4.5		4.5		"
		35	V_{IH1} 3/		I_{OH} 4/	V_{IH1} 3/	V_{IH1} 3/	V_{IH1} 3/	V_{IH1} 3/	"	V_{IH1} 3/	"	V_{IH1} 3/		V_{IH1} 3/	V_{IH1} 3/	V_{IH1} 3/	15.0 V	Q_8	4.5		4.5		4.5		"
V_{OH2}		36	V_{IH2} 6/			V_{IH2} 6/	V_{IH2} 6/	V_{IH2} 6/	V_{IH2} 6/	"	V_{IH2} 6/	"	V_{IH2} 6/		V_{IH2} 6/	V_{IH2} 6/	V_{IH2} 6/	12.5 V	Q_6	11.25		11.25		11.25		"
		37	V_{IH2} 6/			V_{IH2} 6/	V_{IH2} 6/	V_{IH2} 6/	V_{IH2} 6/	"	V_{IH2} 6/	"	V_{IH2} 6/		V_{IH2} 6/	V_{IH2} 6/	V_{IH2} 6/	12.5 V	Q_7	11.25		11.25		11.25		"
		38	V_{IH2} 6/			V_{IH2} 6/	V_{IH2} 6/	V_{IH2} 6/	V_{IH2} 6/	"	V_{IH2} 6/	"	V_{IH2} 6/		V_{IH2} 6/	V_{IH2} 6/	V_{IH2} 6/	12.5 V	Q_8	11.25		11.25		11.25		"
V_{OL1}	3007	39	V_{IL1} 8/	I_{OL} 7/		V_{IL1} 8/	V_{IL1} 8/	V_{IL1} 8/	V_{IL1} 8/	"	V_{IH1} 8/	"	V_{IL1} 8/		V_{IL1} 8/	V_{IL1} 8/	V_{IL1} 8/	15.0 V	Q_6		0.5		0.5		0.5	"
		40	V_{IL1} 8/			V_{IL1} 8/	V_{IL1} 8/	V_{IL1} 8/	V_{IL1} 8/	"	V_{IH1} 8/	"	V_{IL1} 8/	I_{OL} 7/	V_{IL1} 8/	V_{IL1} 8/	V_{IL1} 8/	15.0 V	Q_7		0.5		0.5		0.5	"
		41	V_{IL1} 8/		I_{OL} 7/	V_{IL1} 8/	V_{IL1} 8/	V_{IL1} 8/	V_{IL1} 8/	"	V_{IH1} 8/	"	V_{IL1} 8/		V_{IL1} 8/	V_{IL1} 8/	V_{IL1} 8/	15.0 V	Q_8		0.5		0.5		0.5	"
V_{OL2}		42	V_{IL2} 9/			V_{IL2} 9/	V_{IL2} 9/	V_{IL2} 9/	V_{IL2} 9/	"	V_{IH2} 9/		V_{IL2} 9/		V_{IL2} 9/	V_{IL2} 9/	V_{IL2} 9/	12.5 V	Q_6		1.25		1.25		1.25	
		43	V_{IL2} 9/			V_{IL2} 9/	V_{IL2} 9/	V_{IL2} 9/	V_{IL2} 9/	"	V_{IH2} 9/	"	V_{IL2} 9/		V_{IL2} 9/	V_{IL2} 9/	V_{IL2} 9/	12.5 V	Q_7		1.25		1.25		1.25	"
		44	V_{IL2} 9/			V_{IL2} 9/	V_{IL2} 9/	V_{IL2} 9/	V_{IL2} 9/	"	V_{IH2} 9/	"	V_{IL2} 9/		V_{IL2} 9/	V_{IL2} 9/	V_{IL2} 9/	12.5 V	Q_8		1.25		1.25		1.25	
I_{IH1} 10/	3010	45	15.0 V			15.0 V	15.0 V	15.0 V	15.0 V	"	15.0 V	15.0 V	15.0 V		15.0 V	15.0 V	15.0 V	15.0 V	All inputs together		11.0					nA
I_{IH2}		46	15.0 V			GND	GND	GND	GND	"	GND	GND	GND		GND	GND	GND	"	P_{I8}		1.0		+5			"
		47	GND			15.0 V	GND	GND	"	"	"	"	"		"	"	"	"	P_{I4}		"		"			"
		48	"			GND	15.0 V	GND	"	"	"	"	"		"	"	"	"	P_{I3}		"		"			"
		49	"			"	GND	15.0 V	"	"	"	"	"		"	"	"	"	P_{I2}		"		"			"
		50	"			"	"	GND	15.0 V	"	"	"	"		"	"	"	"	P_{I1}		"		"			"
		51	"			"	"	"	GND	"	15.0 V	"	"		"	"	"	"	P/S control		"		"			"
		52	"			"	"	"	"	"	GND	15.0 V	"		"	"	"	"	Clock		"		"			"
		53	"			"	"	"	"	"	"	GND	15.0 V		"	"	"	"	Serial In		"		"			"
		54	"			"	"	"	"	"	"	"	GND		15.0 V	"	"	"	P_{I5}		"		"			"
		55	"			"	"	"	"	"	"	"	GND		GND	15.0 V	"	"	P_{I6}		"		"			"
		56	"			"	"	"	"	"	"	"	GND		GND	GND	15.0 V	"	P_{I7}		"		"			"

See footnotes at end of device type 02.

TABLE III. Group A inspection for device type 02 - Continued.

Symbol	MIL-STD-883 method	Cases E,F,Z Test no.	Terminal conditions and limits 1/ P_{I8} 1	Q_6 2	Q_8 3	P_{I4} 4	P_{I3} 5	P_{I2} 6	P_{I1} 7	V_{SS} 8	P/S control 9	Clock 10	Serial In 11	Q_7 12	P_{I5} 13	P_{I6} 14	P_{I7} 15	V_{DD} 16	Measured terminal	Test limits Subgroup 1 T_C=25°C Min	Subgroup 1 Max	Subgroup 2 T_C=125°C Min	Subgroup 2 Max	Subgroup 3 T_C=-55°C Min	Subgroup 3 Max	Unit
I_{IL1} 10/	3009	57	GND			GND	GND	GND	GND	GND	GND	GND	GND		GND	GND	GND	15.0 V	All inputs together		-10.0					nA
I_{IL2}		58	"			"	"	"	"	"	"	"	"		"	"	"	"	P_{I8}		-10		-45			"
		59	"			"	"	"	"	"	"	"	"		"	"	"	"	P_{I4}		"		"			"
		60	"			"	"	"	"	"	"	"	"		"	"	"	"	P_{I3}		"		"			"
		61	"			"	"	"	"	"	"	"	"		"	"	"	"	P_{I2}		"		"			"
		62	"			"	"	"	"	"	"	"	"		"	"	"	"	P_{I1}		"		"			"
		63	"			"	"	"	"	"	"	"	"		"	"	"	"	P/S control		"		"			"
		64	"			"	"	"	"	"	"	"	"		"	"	"	"	Clock		"		"			"
		65	"			"	"	"	"	"	"	"	"		"	"	"	"	Serial In		"		"			"
		66	"			"	"	"	"	"	"	"	"		"	"	"	"	P_{I5}		"		"			"
		67	"			"	"	"	"	"	"	"	"		"	"	"	"	P_{I6}		"		"			"
		68	"			"	"	"	"	"	"	"	"		"	"	"	"	P_{I7}		"		"			"
																				Subgroup 4 T_C = 25°C Min	Max					
C_i	3012	69	11/							GND								GND	P_{I8}		15					pF
		70				11/				"								"	P_{I4}		"					"
		71					11/			"								"	P_{I3}		"					"
		72						11/		"								"	P_{I2}		"					"
		73							11/	"								"	P_{I1}		"					"
		74								"	11/							"	P/S control		"					"
		75								"		11/						"	Clock		"					"
		76								"			11/					"	Serial In		"					"
		77								"					11/			"	P_{I5}		"					"
		78								"						11/		"	P_{I6}		"					"
		79								"							11/	"	P_{I7}		"					"
																				Subgroup 7 T_C = 25°C Min	Max	Subgroup 8 T_C=-55°C Min	Max	Subgroup 8 T_C=125°C Min	Max	
Truth table test 12/	3014	80	5.0 V			5.0 V	5.0 V	5.0 V	5.0 V	GND	5.0 V	5.0 V	GND		5.0 V	5.0 V	5.0 V	5.0 V	None	See 13/ to 14/						
		81	5.0 V			5.0 V	5.0 V	5.0 V	5.0 V	"	5.0 V	GND	"		5.0 V	5.0 V	5.0 V	"	None							
		82	5.0 V	H	H	5.0 V	5.0 V	5.0 V	5.0 V	"	5.0 V	5.0 V	"	H	5.0 V	5.0 V	5.0 V	"	All outputs							
		83	GND	"	"	GND	GND	GND	GND	"	GND	5.0 V	"	"	GND	GND	GND	"								
		84	"	"	"	"	"	"	"	"	"	GND	"	"	"	"	"	"	"								
		85	"	"	"	"	"	"	"	"	"	5.0 V	"	"	"	"	"	"	"								
		86	"	"	"	"	"	"	"	"	"	5.0 V	5.0 V	"	"	"	"	"	"								
		87	"	"	"	"	"	"	"	"	"	GND	"	"	"	"	"	"	"								
		88	"	"	"	"	"	"	"	"	"	5.0 V	"	"	"	"	"	"	"								
		89	"	"	"	"	"	"	"	"	"	GND	"	"	"	"	"	"	"								
		90	"	"	"	"	"	"	"	"	"	5.0 V	"	"	"	"	"	"	"								
		91	"	"	"	"	"	"	"	"	"	GND	"	"	"	"	"	"	"								
		92	"	"	"	"	"	"	"	"	"	5.0 V	"	"	"	"	"	"	"								
		93	"	"	"	"	"	"	"	"	"	GND	"	"	"	"	"	"	"								
		94	"	"	"	"	"	"	"	"	"	5.0 V	"	"	"	"	"	"	"								
		95	"	"	"	"	"	"	"	"	"	GND	"	"	"	"	"	"	"								
		96	"	L	"	"	"	"	"	"	"	5.0 V	"	"	"	"	"	"	"								
		97	"	L	"	"	"	"	"	"	"	GND	"	"	"	"	"	"	"								
		98	"	H	"	"	"	"	"	"	"	5.0 V	"	L	"	"	"	"	"								
		99	"	"	"	"	"	"	"	"	"	GND	"	L	"	"	"	"	"								
		100	"	"	L	"	"	"	"	"	"	5.0 V	"	H	"	"	"	"	"								
		101	"	"	L	"	"	"	"	"	"	GND	"	"	"	"	"	"	"								
		102	"	"	H	"	"	"	"	"	"	5.0 V	"	"	"	"	"	"	"								
		103	"	"	H	"	"	"	"	"	5.0 V	5.0 V	GND	"	"	"	"	"	"								
		104	"	"	H	"	"	"	"	"	5.0 V	GND	"	"	"	"	"	"	"								
		105	"	L	L	"	"	"	"	"	5.0 V	5.0 V	"	L	"	"	"	"	"								
		106	5.0 V	L	L	5.0 V	5.0 V	5.0 V	5.0 V	"	GND	GND	"	L	5.0 V	5.0 V	5.0 V	"	"							

See footnotes at end of device type 02.

TABLE III. Group A inspection for device type 02 - Continued

Symbol	MIL-STD-883 method	Cases E,F,Z Test no.	Terminal conditions and limits 1/ P_{I8} 1	Q_6 2	Q_8 3	P_{I4} 4	P_{I3} 5	P_{I2} 6	P_{I1} 7	V_{SS} 8	P/S control 9	Clock 10	Serial In 11	Q_7 12	P_{I5} 13	P_{I6} 14	P_{I7} 15	V_{DD} 16	Measured terminal	Test limits Subgroup 7 T_C=25°C Min	Max	Subgroup 8 T_C=-55°C Min	Max	Subgroup 8 T_C=125°C Min	Max	Unit
Truth table 1/	3014	107	5.0 V	L	L	5.0 V	5.0 V	5.0 V	5.0 V	GND	GND	5.0 V	GND	L	5.0 V	5.0 V	5.0 V	5.0 V	All outputs	See 13/ and 14/						
		108	"	"	"	"	"	"	"	"	"	GND	"	"	"	"	"	"	"							
		109	"	"	"	"	"	"	"	"	"	5.0 V	"	"	"	"	"	"	"							
		110	"	"	"	"	"	"	"	"	"	GND	"	"	"	"	"	"	"							
		111	"	"	"	"	"	"	"	"	"	5.0 V	"	"	"	"	"	"	"							
		112	"	"	"	"	"	"	"	"	"	GND	"	"	"	"	"	"	"							
		113	"	"	"	"	"	"	"	"	"	5.0 V	"	"	"	"	"	"	"							
		114	"	"	"	"	"	"	"	"	"	GND	"	"	"	"	"	"	"							
		115	"	"	"	"	"	"	"	"	"	5.0 V	"	"	"	"	"	"	"							
		116	"	"	"	"	"	"	"	"	5.0 V	GND	5.0 V	"	"	"	"	"	"							
		117	"	H	H	"	"	"	"	"	5.0 V	5.0 V	5.0 V	H	"	"	"	"	"							
		118	GND	"	"	GND	GND	GND	GND	"	GND	GND	GND	"	GND	GND	GND	"	"							
		119	"	"	"	"	"	"	"	"	"	5.0 V	"	"	"	"	"	"	"							
		120	"	"	"	"	"	"	"	"	"	GND	"	"	"	"	"	"	"							
		121	"	"	"	"	"	"	"	"	"	5.0 V	"	"	"	"	"	"	"							
		122	"	"	"	"	"	"	"	"	"	GND	"	"	"	"	"	"	"							
		123	"	"	"	"	"	"	"	"	"	5.0 V	"	"	"	"	"	"	"							
		124	"	"	"	"	"	"	"	"	"	GND	"	"	"	"	"	"	"							
		125	"	"	"	"	"	"	"	"	"	5.0 V	"	"	"	"	"	"	"							
		126	"	"	"	"	"	"	"	"	"	GND	"	"	"	"	"	"	"							
		127	"	"	"	"	"	"	"	"	"	5.0 V	"	"	"	"	"	"	"							
																				Subgroup 9 T_C= 25°C Min	Max	Subgroup 10 T_C=125°C Min	Max	Subgroup 11 T_C=-55°C Min	Max	
t_{PHL1}	3003 Fig. 7	128	IN	OUT		IN	IN	IN	IN	GND	GND	IN	IN		IN	IN	IN	5.0 V	Clock to Q_6	13	975	18	1465	13	975	ns
		129	"			"	"	"	"	"	"	"	"	OUT	"	"	"	"	Clock to Q_7	"	"	"	"	"	"	"
		130	"		OUT	"	"	"	"	"	"	"	"		"	"	"	"	Clock to Q_8	"	"	"	"	"	"	"
t_{PLH1}		131	"	OUT		"	"	"	"	"	"	"	"		"	"	"	"	Clock to Q_6	"	"	"	"	"	"	"
		132	"			"	"	"	"	"	"	"	"	OUT	"	"	"	"	Clock to Q_7	"	"	"	"	"	"	"
		133	"		OUT	"	"	"	"	"	"	"	"		"	"	"	"	Clock to Q_8	"	"	"	"	"	"	"
t_{PHL2}		134	"	OUT		"	"	"	"	"	5.0 V	"	"		"	"	"	"	Clock to Q_6	"	"	"	"	"	"	"
		135	"			"	"	"	"	"	"	"	"	OUT	"	"	"	"	Clock to Q_7	"	"	"	"	"	"	"
		136	"		OUT	"	"	"	"	"	"	"	"		"	"	"	"	Clock to Q_8	"	"	"	"	"	"	"
t_{PLH2}		137	"	OUT		"	"	"	"	"	"	"	"		"	"	"	"	Clock to Q_6	"	"	"	"	"	"	"
		138	"			"	"	"	"	"	"	"	"	OUT	"	"	"	"	Clock to Q_7	"	"	"	"	"	"	"
		139	"		OUT	"	"	"	"	"	"	"	"		"	"	"	"	Clock to Q_8	"	"	"	"	"	"	"
t_{THL}	3004 Fig. 7	140	"	OUT		"	"	"	"	"	"	"	"		"	"	"	"	Q_6	10	650	14	975	10	650	"
		141	"			"	"	"	"	"	"	"	"	OUT	"	"	"	"	Q_7	"	650	"	975	"	650	"
		142	"		OUT	"	"	"	"	"	"	"	"		"	"	"	"	Q_8	"	650	"	975	"	650	"
t_{TLH}		143	"	OUT		"	"	"	"	"	"	"	"		"	"	"	"	Q_6	"	900	"	1350	"	900	"
		144	"			"	"	"	"	"	"	"	"	OUT	"	"	"	"	Q_7	"	900	"	1350	"	900	"
		145	"		OUT	"	"	"	"	"	"	"	"		"	"	"	"	Q_8	"	900	"	1350	"	900	"
t_{CL} (Max) 15/		146		OUT							GND	"	"					"	Clock		1.0		1.4		1.0	μs
		147									GND	"	"	OUT				"	Clock		1.0		1.4		1.0	μs
		148			OUT						GND	"	"					"	Clock		1.0		1.4		1.0	μs

See footnotes at end of device type 02

NOTES:

1/ Terminals not designated may be "HIGH" level logic, "LOW" level logic or open except as follows:
$V_{IC(pos)}$ tests; the V_{SS} terminal shall be open.
$V_{IC(neg)}$ tests; the V_{DD} terminal shall be open.
I_{SS} tests; the output terminals shall be open.

2/ Test numbers 23 through 32 shall be run in sequence. See 4.5.4

3/ V_{IH1} = 3.8 V at 25°C, 3.6 V at 125°C, 3.95 V at -55°C.

4/ I_{OH} = -80 μA at 25°C, -55 μA at 125°C, -100 μA at -55°C.

5/ Apply clock pulse; V_{IN} = 0 V to V_{DD} until proper output state is achieved.

6/ V_{IH2} = 9.5 V at 25°C, 9.25 V at 125°C, 9.75 V at -55°C.

7/ I_{OL} = 120 μA at 25°C, 85 μA at 125°C, 150 μA at -55°C.

8/ V_{IL1} = 1.1 V at 25°C, 0.85 V at 125°C, 1.35 V at -55°C.

9/ V_{IL2} = 1.8 V at 25°C, 2.55 V at 125°C, 3.05 V at -55°C.

10/ The device manufacturer may, at his option, measure I_{IL} and I_{IH} at 25°C for each individual input or measure all inputs together.

11/ See 4.4.1c.

12/ Test numbers 80 through 127 shall be run in sequence.

13/ The output voltage limits for each temperature are "H" = V_{DD} -0.5 V min. and "L" = V_{SS} +0.5 V max.

14/ The functional tests shall be performed at V_{IH} and V_{DD} ≤5.0 V dc and ≥15 V dc.

15/ The maximum clock frequency (f_{CL}) requirement is considered met if proper output state changes occur with the pulse repetition period set to that given in the limits column.

TABLE III. Group A inspection for device type 03.

Symbol	MIL-STD-883 method	Cases E,F,Z Test no.	Terminal conditions and limits 1/: Clock B 1	Q_{4B} 2	Q_{3A} 3	Q_{2A} 4	Q_{1A} 5	Reset A 6	Data A 7	V_{SS} 8	Clock A 9	Q_{4A} 10	Q_{3B} 11	Q_{2B} 12	Q_{1B} 13	Reset B 14	Data B 15	V_{DD} 16	Measured terminal	Test limits: Subgroup 1 T_C=25°C Min	Subgroup 1 T_C=25°C Max	Subgroup 2 T_C=125°C Min	Subgroup 2 T_C=125°C Max	Subgroup 3 T_C=-55°C Min	Subgroup 3 T_C=-55°C Max	Unit
I_C (pos)		1									1 mA							GND	Clock A		1.5					V
		2							1 mA									"	Data A		"					"
		3						1 mA										"	Reset A		"					"
		4	1 mA															"	Clock B		"					"
		5															1 mA	"	Data B		"					"
		6														1 mA		"	Reset B		"					"
V_{IC} (neg)		7								GND	-1 mA								Clock A		-6					"
		8							-1 mA	"									Data A		"					"
		9						-1 mA		"									Reset A		"					"
		10	-1 mA							"									Clock B		"					"
		11								"							-1 mA		Data B		"					"
		12								"						-1 mA			Reset B		"					"
I_{SS} 2/	3005	13	GND					15.0 V	15.0 V	"	GND					15.0 V	15.0 V	15.0 V	V_{SS}		-0.5		5.0			μA
		14	15.0 V					15.0 V	"	"	15.0 V					15.0 V	"	"	None		"		"			"
		15	15.0 V					GND	"	"	15.0 V					GND	"	"	"		"		"			"
		16	GND					"	"	"	GND					"	"	"	"		"		"			"
		17	15.0 V					"	"	"	15.0 V					"	"	"	"		"		"			"
		18	15.0 V					"	GND	"	15.0 V					"	GND	"	"		"		"			"
		19	GND					"	GND	"	GND					"	GND	"	"		"		"			"
		20	15.0 V					"	GND	"	15.0 V					"	GND	"	"		"		"			"
		21	15.0 V					"	15.0 V	"	15.0 V					"	15.0 V	"	"		"		"			"
		22	GND					"	15.0 V	"	GND					"	15.0 V	"	"		"		"			"
		23	15.0 V					"	15.0 V	"	15.0 V					"	15.0 V	"	"		"		"			"
		24	15.0 V					"	GND	"	15.0 V					"	GND	"	V_{SS}		"		"			"
		25	GND					"	GND	"	GND					"	GND	"	V_{SS}		"		"			"
		26	15.0 V					"	GND	"	15.0 V					"	GND	"	None		"		"			"
		27	15.0 V					"	15.0 V	"	15.0 V					"	15.0 V	"	V_{SS}		"		"			"
V_{OH1}	3006	28	GND				I_{OH} 4/	V_{IL1} 5/	V_{IH1} 6/	"	3/					GND	GND	5.0 V	Q_{1A}	4.5		4.5		4.5		V
		29	"			I_{OH}				"	"					"	"	"	Q_{2A}	"		"		"		"
		30	"		I_{OH}			"	"	"	"					"	"	"	Q_{3A}	"		"		"		"
		31	"					"	"	"	"	I_{OH}				"	"	"	Q_{4A}	"		"		"		"
		32	3/					GND	GND	"	GND				I_{OH}	V_{IL1}	V_{IH1}	"	Q_{1B}	"		"		"		"
		33	"					"	"	"	"			I_{OH}		"	"	"	Q_{2B}	"		"		"		"
		34	"					"	"	"	"		I_{OH}			"	"	"	Q_{3B}	"		"		"		"
		35	"	I_{OH}				"	"	"	"					"	"	"	Q_{4B}	"		"		"		"
V_{OH2}		36	GND					V_{IL2} 7/	V_{IH2} 8/	"	3/					GND	GND	12.5 V	Q_{1A}	11.25		11.25		11.25		"
		37	"					"	"	"	"					"	"	"	Q_{2A}	"		"		"		"
		38	"					"	"	"	"					"	"	"	Q_{3A}	"		"		"		"
		39	"					"	"	"	"					"	"	"	Q_{4A}	"		"		"		"
		40	3/					GND	GND	"	GND					V_{IL2}	V_{IH2}	"	Q_{1B}	"		"		"		"
		41	"					"	"	"	"					"	"	"	Q_{2B}	"		"		"		"
		42	"					"	"	"	"					"	"	"	Q_{3B}	"		"		"		"
		43	"					"	"	"	"					"	"	"	Q_{4B}	"		"		"		"
V_{OL1}	3007	44	GND				I_{OL} 9/	V_{IL1}	V_{IL1}	"	3/					GND	GND	5.0 V	Q_{1A}		0.5		0.5		0.5	"
		45	"			I_{OL}				"	"					"	"	"	Q_{2A}		"		"		"	"
		46	"		I_{OL}			"	"	"	"					"	"	"	Q_{3A}		"		"		"	"
		47	"					"	"	"	"	I_{OL}				"	"	"	Q_{4A}		"		"		"	"
		48	3/					GND	GND	"	GND				I_{OL}	V_{IL1}	V_{IL1}	"	Q_{1B}		"		"		"	"
		49	"					"	"	"	"			I_{OL}		"	"	"	Q_{2B}		"		"		"	"
		50	"					"	"	"	"		I_{OL}			"	"	"	Q_{3B}		"		"		"	"
		51	"	I_{OL}				"	"	"	"					"	"	"	Q_{4B}		"		"		"	"
V_{OL2}		52	GND					V_{IL2}	V_{IL2}	"	3/					GND	GND	12.5 V	Q_{1A}		1.25		1.25		1.25	"
		53	"					"	"	"	"					"	"	"	Q_{2A}		"		"		"	"
		54	"					"	"	"	"					"	"	"	Q_{3A}		"		"		"	"
		55	"					"	"	"	"					"	"	"	Q_{4A}		"		"		"	"
		56	3/					GND	GND	"	GND					V_{IL2}	V_{IL2}	"	Q_{1B}		"		"		"	"
		57	"					"	"	"	"					"	"	"	Q_{2B}		"		"		"	"
		58	"					"	"	"	"					"	"	"	Q_{3B}		"		"		"	"
		59	"					"	"	"	"					"	"	"	Q_{4B}		"		"		"	"

See footnotes at end of device type 03.

TABLE III. Group A inspection for device type 03 - Continued.

Symbol	MIL-STD-883 method	Cases E,F,Z Test no.	Terminal conditions and limits 1/: Clock B 1	Q4B 2	Q3A 3	Q2A 4	Q1A 5	Reset A 6	Data A 7	VSS 8	Clock A 9	Q4A 10	Q3B 11	Q2B 12	Q1B 13	Reset B 14	Data B 15	VDD 16	Measured terminal	Test limits: Subgroup 1 TC=25°C Min	Subgroup 1 TC=25°C Max	Subgroup 2 TC=125°C Min	Subgroup 2 TC=125°C Max	Subgroup 3 TC=-55°C Min	Subgroup 3 TC=-55°C Max	Unit
I_{IH1} 10/	3010	60	15.0 V					15.0 V	15.0 V	GND	15.0 V					15.0 V	15.0 V	15.0 V	All inputs together		6.0					mA
I_{IH2}		61	GND					GND	GND	"	15.0 V					GND	GND	"	Clock A		1.0		45			"
		62	GND					GND	15.0 V	"	GND					"	"	"	Data A		"		"			"
		63	GND					15.0 V	GND	"	"					"	"	"	Reset A		"		"			"
		64	15.0 V					GND	"	"	"					"	"	"	Clock B		"		"			"
		65	GND					"	"	"	"					"	15.0 V	"	Data B		"		"			"
		66	"					"	"	"	"					15.0 V	GND	"	Reset B		"		"			"
I_{IL1} 10/	3009	67	"					"	"	"	"					GND	GND	"	All inputs together		-6.0					"
I_{IL2}		68	"					"	"	"	"					"	"	"	Clock A		-1.0		-45			"
		69	"					"	"	"	"					"	"	"	Data A		"		"			"
		70	"					"	"	"	"					"	"	"	Reset A		"		"			"
		71	"					"	"	"	"					"	"	"	Clock B		"		"			"
		72	"					"	"	"	"					"	"	"	Data B		"		"			"
		73	"					"	"	"	"					"	"	"	Reset B		"		"			"
																				Subgroup 4 TC=25°C Min	Subgroup 4 TC=25°C Max					
C_i	3012	74								GND	11/							GND	Clock A		12					pF
		75							11/	"								"	Data A		"					"
		76						11/		"								"	Reset A		"					"
		77	11/							"								"	Clock B		"					"
		78								"							11/	"	Data B		"					"
		79								"						11/		"	Reset B		"					"
																				Subgroup 7 TC=25°C Min	Subgroup 7 TC=25°C Max	Subgroup 8 TC=125°C Min	Subgroup 8 TC=125°C Max	Subgroup 8 TC=-55°C Min	Subgroup 8 TC=-55°C Max	
Truth table test 12/	3014	80	5.0 V	L	L	L	L	5.0 V	5.0 V	GND	5.0 V	L	L	L	L	5.0 V	5.0 V	5.0 V	All outputs	See 13/, 14/						
		81	5.0 V	"	"	"	L	GND	"	"	5.0 V	"	"	"	L	GND	"	"	"							
		82	GND	"	"	"	L	"	"	"	GND	"	"	"	L	"	"	"	"							
		83	5.0 V	"	"	"	H	"	"	"	5.0 V	"	"	"	H	"	"	"	"							
		84	5.0 V	"	"	"	H	"	GND	"	5.0 V	"	"	"	H	"	GND	"	"							
		85	GND	"	"	"	H	"	GND	"	GND	"	"	"	H	"	GND	"	"							
		86	5.0 V	"	"	H	L	"	GND	"	5.0 V	"	"	H	L	"	GND	"	"							
		87	5.0 V	"	"	H	L	"	5.0 V	"	5.0 V	"	"	H	L	"	5.0 V	"	"							
		88	GND	"	"	H	L	"	"	"	GND	"	"	H	L	"	"	"	"							
		89	5.0 V	"	H	L	H	"	"	"	5.0 V	"	H	L	H	"	"	"	"							
		90	GND	"	H	L	"	"	"	"	GND	"	H	L	"	"	"	"	"							
		91	5.0 V	H	L	H	"	"	"	"	5.0 V	H	L	H	"	"	"	"	"							
		92	GND	H	L	"	"	"	"	"	GND	H	L	"	"	"	"	"	"							
		93	5.0 V	L	H	"	"	"	"	"	5.0 V	L	H	"	"	"	"	"	"							
		94	GND	L	"	"	"	"	"	"	GND	L	"	"	"	"	"	"	"							
		95	5.0 V	H	"	"	"	"	"	"	5.0 V	H	"	"	"	"	"	"	"							
		96	GND	H	"	"	"	"	"	"	GND	H	"	"	"	"	"	"	"							
		97	GND	L	L	L	L	5.0 V	"	"	GND	L	L	L	L	5.0 V	"	"	"							
		98	5.0 V	L	L	L	L	5.0 V	"	"	5.0 V	L	L	L	L	5.0 V	"	"	"							
																				Subgroup 9 TC=25°C Min	Subgroup 9 TC=25°C Max	Subgroup 10 TC=125°C Min	Subgroup 10 TC=125°C Max	Subgroup 11 TC=-55°C Min	Subgroup 11 TC=-55°C Max	
t_{PHL1}	3003 Fig. 6	99	IN				OUT	GND	IN	GND	IN					GND	IN	5.0 V	Clock A to Q_{1A}	20	975	30	1465	20	975	ns
		100				OUT		"	"	"	"					"	"		Clock A to Q_{2A}	"	"	"	"	"	"	"
		101			OUT			"	"	"	"					"	"		Clock A to Q_{3A}	"	"	"	"	"	"	"
		102						"	"	"	"	OUT				"	"		Clock A to Q_{4A}	"	"	"	"	"	"	"
		103	IN						"	"					OUT	"	"	IN	Clock B to Q_{1B}	"	"	"	"	"	"	"

See footnotes at end of device type 03.

TABLE III. Group A inspection for device type 03 - Continued.

Symbol	MIL-STD-883 method	Cases E,F,Z	Terminal conditions and Limits 1/																Measured terminal	Test limits						Unit
			Clock B	Q_{4B}	Q_{3A}	Q_{2A}	Q_{1A}	Reset A	Data A	V_{SS}	Clock A	Q_{4A}	Q_{3B}	Q_{2B}	Q_{1B}	Reset B	Data B	V_{DD}		Subgroup 9 T_C=25°C		Subgroup 10 T_C=125°C		Subgroup 11 T_C=-55°C		
		Test no.	1	2	3	4	5	6	7	8	9	10	11	12	13	14	15	16		Min	Max	Min	Max	Min	Max	
t_{PHL1}	3003 Fig. 8	104	IN					GND		GND				OUT		GND	IN	5.0 V	Clock B to Q_{2B}	20	975	30	1465	20	975	ns
		105	"					"		"			OUT			"	"	"	Clock B to Q_{3B}	"	"	"	"	"	"	"
		106	"	OUT				"		"						"	"	"	Clock B to Q_{4B}	"	"	"	"	"	"	"
t_{PLH1}		107					OUT	"	IN	"	IN					"		"	Clock A to Q_{1A}	"	"	"	"	"	"	"
		108				OUT		"	"	"	"					"		"	Clock A to Q_{2A}	"	"	"	"	"	"	"
		109			OUT			"	"	"	"					"		"	Clock A to Q_{3A}	"	"	"	"	"	"	"
		110						"	"	"	"	OUT				"		"	Clock A to Q_{4A}	"	"	"	"	"	"	"
		111	IN					"		"					OUT	"	IN	"	Clock B to Q_{1B}	"	"	"	"	"	"	"
		112	"					"		"				OUT		"	"	"	Clock B to Q_{2B}	"	"	"	"	"	"	"
		113	"					"		"			OUT			"	"	"	Clock B to Q_{3B}	"	"	"	"	"	"	"
		114	"	OUT				"		"						"	"	"	Clock B to Q_{4B}	"	"	"	"	"	"	"
t_{PHL2}		115	GND				OUT	IN		"	GND							"	Reset to Q_{1A}	"	"	"	"	"	"	"
		116	"			OUT		"		"	"							"	Reset to Q_{2A}	"	"	"	"	"	"	"
		117	"		OUT			"		"	"							"	Reset to Q_{3A}	"	"	"	"	"	"	"
		118	"					"		"	"	OUT						"	Reset to Q_{4A}	"	"	"	"	"	"	"
		119	"							"	"				OUT	IN		"	Reset to Q_{1B}	"	"	"	"	"	"	"
		120	"							"	"			OUT		"		"	Reset to Q_{2B}	"	"	"	"	"	"	"
		121	"							"	"		OUT			"		"	Reset to Q_{3B}	"	"	"	"	"	"	"
		122	"	OUT						"	"					"		"	Reset to Q_{4B}	"	"	"	"	"	"	"
t_{THL}	3004 Fig. 8	123					OUT	GND	IN	"	IN					GND		"	Q_{1A}	13	650	18	975	13	650	"
		124				OUT		"	"	"	"					"		"	Q_{2A}	"	"	"	"	"	"	"
		125			OUT			"	"	"	"					"		"	Q_{3A}	"	"	"	"	"	"	"
		126						"	"	"	"	OUT				"		"	Q_{4A}	"	"	"	"	"	"	"
		127	IN					"		"					OUT	"	IN	"	Q_{1B}	"	"	"	"	"	"	"
		128	"					"		"				OUT		"	"	"	Q_{2B}	"	"	"	"	"	"	"
		129	"					"		"			OUT			"	"	"	Q_{3B}	"	"	"	"	"	"	"
		130	"	OUT				"		"						"	"	"	Q_{4B}	"	"	"	"	"	"	"
t_{TLH}		131					OUT	"	IN	"	IN					"		"	Q_{1A}	"	975	"	1465	"	975	"
		132				OUT		"	"	"	"					"		"	Q_{2A}	"	"	"	"	"	"	"
		133			OUT			"	"	"	"					"		"	Q_{3A}	"	"	"	"	"	"	"
		134						"	"	"	"	OUT				"		"	Q_{4A}	"	"	"	"	"	"	"
		135	IN					"		"					OUT	"	IN	"	Q_{1B}	"	"	"	"	"	"	"
		136	"					"		"				OUT		"	"	"	Q_{2B}	"	"	"	"	"	"	"
		137	"					"		"			OUT			"	"	"	Q_{3B}	"	"	"	"	"	"	"
		138	"	OUT				"		"						"	"	"	Q_{4B}	"	"	"	"	"	"	"
f_{CL} (max) 15/		139				OUT		"	IN	"	IN					"		"	Clock A		1.0		1.4		1.0	μs
		140				OUT		"	"	"	"					"		"	"		"		"		"	"
		141			OUT			"	"	"	"					"		"	"		"		"		"	"
		142						"	"	"	"	OUT				"		"	"		"		"		"	"
		143	IN					"		"					OUT	"	IN	"	Clock B		"		"		"	"
		144	"					"		"				OUT		"	"	"	"		"		"		"	"
		145	"					"		"			OUT			"	"	"	"		"		"		"	"
		146	"	OUT				"		"						"	"	"	"		"		"		"	"

See footnotes at end of device type 03.

NOTES:

1/ Terminals not designated may be "HIGH" level logic, "LOW" level logic or open except as follows:
$V_{IC(pos)}$ tests; the V_{SS} terminal shall be open.
$V_{IC(neg)}$ tests; the V_{DD} terminal shall be open.
I_{SS} tests; the output terminals shall be open.
2/ Test numbers 13 through 27 shall be run in sequence. See 4.5.4.
3/ Apply clock pulse; V_{IN} = 0 V dc to V_{DD} until proper output state is achieved.
4/ I_{OH} = -80 μA at 25°C, -55 μA at 125°C, -100 μA at -55°C.
5/ V_{IL1} = 1.1 V at 25°C, 0.85 V at 125°C, 1.35 V at -55°C.
6/ V_{IH1} = 3.8 V at 25°C, 3.6 V at 125°C, 3.95 V at -55°C.
7/ V_{IL2} = 2.8 V at 25°C, 2.55 V at 125°C, 3.05 V at -55°C.
8/ V_{IH2} = 9.5 V at 25°C, 9.25 V at 125°C, 9.75 V at -55°C.
9/ I_{OL} = 120 μA at 25°C, 85 μA at 125°C, 150 μA at -55°C.
10/ The device manufacturer may, at his option, measure I_{IL} and I_{IH} at 25°C for each individual input or measure all inputs together.
11/ See 4.4.1c.
12/ Test numbers 80 through 98 shall be run in sequence.
13/ The output voltage limits for each temperature are "H" = V_{DD} -0.5 V min. and "L" = V_{SS} +0.5 V max.
14/ The functional test shall be performed at V_{IH} and V_{DD} <5.0 V dc and >15.0 V dc.
15/ The maximum clock frequency (fCL) requirement is considered met if proper output state changes occur with the pulse repetition period set to that given in the limits column.

TABLE III. Group A inspection for device type 04.

Symbol	MIL-STD-883 method	Cases E,F,Z Test no.	Terminal conditions and limits 1/ P_{I8} 1	Q_6 2	Q_8 3	P_{I4} 4	P_{I3} 5	P_{I2} 6	P_{I1} 7	V_{SS} 8	P/S control 9	Clock 10	Serial In 11	Q_7 12	P_{I5} 13	P_{I6} 14	P_{I7} 15	V_{DD} 16	Measured terminal	Test limits Subgroup 1 T_C=25°C Min	Subgroup 1 Max	Subgroup 2 T_C=125°C Min	Subgroup 2 Max	Subgroup 3 T_C=-55°C Min	Subgroup 3 Max	Unit
V_{IC} (pos)		1	1 mA															GND	P_{I8}		1.5					V
		2				1 mA												"	P_{I4}		"					"
		3					1 mA											"	P_{I3}		"					"
		4						1 mA										"	P_{I2}		"					"
		5							1 mA									"	P_{I1}		"					"
		6									1 mA							"	P/S control		"					"
		7										1 mA						"	Clock		"					"
		8											1 mA					"	Serial In		"					"
		9													1 mA			"	P_{I5}		"					"
		10														1 mA		"	P_{I6}		"					"
		11															1 mA	"	P_{I7}		"					"
V_{IC} (neg)		12	-1 mA							GND									P_{I8}		-6					"
		13				-1 mA				"									P_{I4}		"					"
		14					-1 mA			"									P_{I3}		"					"
		15						-1 mA		"									P_{I2}		"					"
		16							-1 mA	"									P_{I1}		"					"
		17								"									P/S control		"					"
		18								"		-1 mA							Clock		"					"
		19								"			-1 mA						Serial In		"					"
		20								"					-1 mA				P_{I5}		"					"
		21								"						-1 mA			P_{I6}		"					"
		22								"							-1 mA		P_{I7}		"					"
I_{CC} 1/	3005	23	GND			GND	15.0 V	GND	15.0 V	"	15.0 V	GND	GND		15.0 V	GND	15.0 V	15.0 V	V_{SS}		-0.5		-0.5			-5
		24	15.0 V			15.0 V	GND	15.0 V	GND	"	15.0 V	GND	15.0 V		GND	15.0 V	GND	"	V_{SS}		"		"			"
		25	15.0 V			15.0 V	GND	15.0 V	GND	"	15.0 V	15.0 V	15.0 V		GND	15.0 V	GND	"	None		"		"			"
		26	15.0 V			15.0 V	GND	15.0 V	GND	"	GND	"	15.0 V		GND	15.0 V	GND	"	V_{SS}		"		"			"
		27	GND			GND	15.0 V	GND	15.0 V	"	15.0 V	"	GND		15.0 V	GND	15.0 V	"	None		"		"			"
		28	GND			GND	15.0 V	GND	15.0 V	"	GND	"	GND		15.0 V	GND	15.0 V	"	V_{SS}		"		"			"
		29	GND			GND	15.0 V	GND	15.0 V	"	GND	GND	GND		15.0 V	GND	15.0 V	"	V_{SS}		"		"			"
V_{OH1}	3006	30	V_{IH1} 3/	I_{OH} 2/		V_{IH1}	V_{IH1}	V_{IH1}	V_{IH1}	"	V_{IH1}	5/ "	V_{IH1}		V_{IH1}	V_{IH1}	V_{IH1}	15.0 V	Q_6	4.5		4.5		4.5		V
		31	V_{IH1} 3/			V_{IH1}	V_{IH1}	V_{IH1}	V_{IH1}	"	V_{IH1}	"	V_{IH1}	I_{OH}	V_{IH1}	V_{IH1}	V_{IH1}	15.0 V	Q_7	4.5		4.5		4.5		"
		32	V_{IH1} 3/		I_{OH}	V_{IH1}	V_{IH1}	V_{IH1}	V_{IH1}	"	V_{IH1}	"	V_{IH1}		V_{IH1}	V_{IH1}	V_{IH1}	15.0 V	Q_8	4.5		4.5		4.5		"
V_{OH2}		33	V_{IH2} 6/			V_{IH2}	V_{IH2}	V_{IH2}	V_{IH2}	"	V_{IH2}	"	V_{IH2}		V_{IH2}	V_{IH2}	V_{IH2}	12.5 V	Q_6	11.25		11.25		11.25		"
		34	V_{IH2} 6/			V_{IH2}	V_{IH2}	V_{IH2}	V_{IH2}	"	V_{IH2}	"	V_{IH2}		V_{IH2}	V_{IH2}	V_{IH2}	12.5 V	Q_7	11.25		11.25		11.25		"
		35	V_{IH2} 6/			V_{IH2}	V_{IH2}	V_{IH2}	V_{IH2}	"	V_{IH2}	"	V_{IH2}		V_{IH2}	V_{IH2}	V_{IH2}	12.5 V	Q_8	11.25		11.25		11.25		"
V_{OL1}	3007	36	V_{IL1} 7/	I_{OL} 2/		V_{IL1}	V_{IL1}	V_{IL1}	V_{IL1}	"	V_{IH1}	"	V_{IL1}		V_{IL1}	V_{IL1}	V_{IL1}	15.0 V	Q_6		0.5		0.5		0.5	"
		37	V_{IL1} 7/			V_{IL1}	V_{IL1}	V_{IL1}	V_{IL1}	"	V_{IH1}	"	V_{IL1}	I_{OL}	V_{IL1}	V_{IL1}	V_{IL1}	15.0 V	Q_7		0.5		0.5		0.5	"
		38	V_{IL1} 7/		I_{OL}	V_{IL1}	V_{IL1}	V_{IL1}	V_{IL1}	"	V_{IH1}	"	V_{IL1}		V_{IL1}	V_{IL1}	V_{IL1}	15.0 V	Q_8		0.5		0.5		0.5	"
V_{OL2}		39	V_{IL2} 8/			V_{IL2}	V_{IL2}	V_{IL2}	V_{IL2}	"	V_{IH2}	"	V_{IL2}		V_{IL2}	V_{IL2}	V_{IL2}	12.5 V	Q_6		1.25		1.25		1.25	"
		40	V_{IL2} 8/			V_{IL2}	V_{IL2}	V_{IL2}	V_{IL2}	"	V_{IH2}	"	V_{IL2}		V_{IL2}	V_{IL2}	V_{IL2}	12.5 V	Q_7		1.25		1.25		1.25	"
		41	V_{IL2} 8/			V_{IL2}	V_{IL2}	V_{IL2}	V_{IL2}	"	V_{IH2}	"	V_{IL2}		V_{IL2}	V_{IL2}	V_{IL2}	12.5 V	Q_8		1.25		1.25		1.25	"
I_{IH1} 10/	3010	42	15.0 V			15.0 V	15.0 V	15.0 V	15.0 V	"	15.0 V	15.0 V	15.0 V		15.0 V	15.0 V	15.0 V	15.0 V	All inputs together		11.0					nA
I_{IH2}		43	15.0 V			GND	GND	GND	GND	"	GND	GND	GND		GND	GND	GND	"	P_{I8}		1.0					"
		44	GND			15.0 V	GND	GND	"	"	"	"	"		"	"	"	"	P_{I4}		"					"
		45	"			GND	15.0 V	GND	"	"	"	"	"		"	"	"	"	P_{I3}		"					"
		46	"			"	GND	15.0 V	"	"	"	"	"		"	"	"	"	P_{I2}		"					"
		47	"			"	"	GND	15.0 V	"	"	"	"		"	"	"	"	P_{I1}		"					"
		48	"			"	"	"	GND	"	15.0 V	"	"		"	"	"	"	P/S control		"					"
		49	"			"	"	"	"	"	GND	15.0 V	"		"	"	"	"	Clock		"					"
		50	"			"	"	"	"	"	"	GND	15.0 V		"	"	"	"	Serial In		"					"
		51	"			"	"	"	"	"	"	"	GND		15.0 V	"	"	"	P_{I5}		"					"
		52	"			"	"	"	"	"	"	"	GND		GND	15.0 V	"	"	P_{I6}		"					"
		53	"			"	"	"	"	"	"	"	GND		GND	GND	15.0 V	"	P_{I7}		"					"

See footnotes at end of device type 04.

TABLE III. Group A inspection for device type 04 - Continued.

Symbol	MIL-STD-883 method	Cases E,F,2	Terminal conditions and limits 1/																Measured terminal	Test limits: Subgroup 1 T_C=25°C		Subgroup 2 T_C=125°C		Subgroup 3 T_C=-55°C		Unit
		Test no.	P_{I8} 1	Q_6 2	Q_8 3	P_{I4} 4	P_{I3} 5	P_{I2} 6	P_{I1} 7	V_{SS} 8	P/S control 9	Clock 10	Serial In 11	Q_7 12	P_{I5} 13	P_{I6} 14	P_{I7} 15	V_{DD} 16		Min	Max	Min	Max	Min	Max	
I_{IL1} 2/	3010	54	GND			GND	GND	GND	GND	GND	GND	GND	GND		GND	GND	GND	15.0 V	All inputs together		-11.0					nA
I_{IL2}		55	"			"	"	"	"	"	"	"	"		"	"	"	"	P_{I8}		-1.0		-45			"
		56	"			"	"	"	"	"	"	"	"		"	"	"	"	P_{I4}		"		"			"
		57	"			"	"	"	"	"	"	"	"		"	"	"	"	P_{I3}		"		"			"
		58	"			"	"	"	"	"	"	"	"		"	"	"	"	P_{I2}		"		"			"
		59	"			"	"	"	"	"	"	"	"		"	"	"	"	P_{I1}		"		"			"
		60	"			"	"	"	"	"	"	"	"		"	"	"	"	P/S control		"		"			"
		61	"			"	"	"	"	"	"	"	"		"	"	"	"	Clock		"		"			"
		62	"			"	"	"	"	"	"	"	"		"	"	"	"	Serial In		"		"			"
		63	"			"	"	"	"	"	"	"	"		"	"	"	"	P_{I5}		"		"			"
		64	"			"	"	"	"	"	"	"	"		"	"	"	"	P_{I6}		"		"			"
		65	"			"	"	"	"	"	"	"	"		"	"	"	"	P_{I7}		"		"			"
																				Subgroup 4 T_C = 25°C Min	Max					
C_i	3012	66	11/							GND								GND	P_{I8}		12					pF
		67				11/				"								"	P_{I4}		"					"
		68					11/			"								"	P_{I3}		"					"
		69						11/		"								"	P_{I2}		"					"
		70							11/	"								"	P_{I1}		"					"
		71								"	11/							"	P/S control		"					"
		72								"		11/						"	Clock		"					"
		73								"			11/					"	Serial In		"					"
		74								"					11/			"	P_{I5}		"					"
		75								"						11/		"	P_{I6}		"					"
		76								"							11/	"	P_{I7}		"					"
																				Subgroup 7 T_C=25°C Min	Max	Subgroup 8 T_C=-55°C Min	Max	Subgroup 9 T_C=125°C Min	Max	
Truth table test 12/	3014	77	GND	L	L	GND	GND	GND	GND	GND	5.0 V	5.0 V	GND	L	GND	GND	GND	5.0 V	All outputs	See 12/ 14/						
		78	GND	"	"	GND	GND	GND	GND	"	GND	5.0 V	GND	"	GND	GND	GND	"	"							
		79	5.0 V	"	"	5.0 V	5.0 V	5.0 V	GND	"	"	15/	5.0 V	"	5.0 V	5.0 V	5.0 V	"	"							
		80	"	"	"	5.0 V	5.0 V	GND	5.0 V	"	"	"	GND	"	"	"	"	"	"							
		81	"	"	"	5.0 V	GND	5.0 V	GND	"	"	"	5.0 V	"	"	"	"	"	"							
		82	"	"	"	GND	5.0 V	GND	"	"	"	"	"	"	"	"	"	"	"							
		83	"	"	"	5.0 V	GND	"	"	"	"	"	"	"	GND	"	"	"	"							
		84	"	"	"	5.0 V	"	"	"	"	"	GND	"	"	GND	"	"	"	"							
		85	"	H	"	GND	"	"	"	"	"	5.0 V	"	"	5.0 V	GND	"	"	"							
		86	"	H	"	"	"	"	"	"	"	GND	"	"	5.0 V	GND	"	"	"							
		87	"	L	"	"	"	"	"	"	"	5.0 V	"	H	GND	5.0 V	GND	"	"							
		88	"	L	"	"	"	"	"	"	"	GND	"	H	"	5.0 V	GND	"	"							
		89	GND	H	H	"	"	"	"	"	"	5.0 V	"	L	"	GND	5.0 V	"	"							
		90	5.0 V	"	L	"	"	"	"	"	"	15/	"	H	"	"	GND	"	"							
		91	GND	"	H	"	"	"	"	"	"	15/	"	H	"	"	"	"	"							
		92	"	"	H	"	"	"	"	"	"	GND	"	H	"	"	"	"	"							
		93	"	L	L	"	"	"	"	"	5.0 V	GND	"	L	"	"	"	"	"							
		94	"	"	"	"	"	"	"	"	GND	GND	GND	"	"	"	"	"	"							
		95	5.0 V	"	"	5.0 V	5.0 V	5.0 V	5.0 V	"	"	5.0 V	"	"	5.0 V	5.0 V	5.0 V	"	"							
		96	"	"	"	"	"	"	"	"	"	15/	"	"	"	"	"	"	"							
		97	"	"	"	"	"	"	"	"	"	"	"	"	"	"	"	"	"							
		98	"	"	"	"	"	"	"	"	"	"	"	"	"	"	"	"	"							
		99	"	"	"	"	"	"	"	"	"	"	"	"	"	"	"	"	"							
		100	"	"	"	"	"	"	"	"	"	GND	"	"	"	"	"	"	"							
		101	"	H	H	"	"	"	"	"	5.0 V	GND	"	H	"	"	"	"	"							
		102	"	"	"	"	"	"	"	"	GND	GND	5.0 V	"	"	"	"	"	"							
		103	GND	"	"	GND	GND	GND	"	"	GND	5.0 V	5.0 V	"	GND	GND	GND	"	"							
		104	GND	"	"	GND	GND	5.0 V	"	"	GND	15/	5.0 V	"	GND	GND	GND	"	"							

See footnotes at end of device type 04.

TABLE III. Group A inspection for device type 04 - Continued.

Symbol	MIL-STD-883 method	Cases E,F,Z Test no.	Terminal conditions and limits 1/ P_{I8} 1	Q_6 2	Q_8 3	P_{I4} 4	P_{I3} 5	P_{I2} 6	P_{I1} 7	V_{SS} 8	P/S control 9	Clock 10	Serial In 11	Q_7 12	P_{I5} 13	P_{I6} 14	P_{I7} 15	V_{DD} 16	Measured terminal	Test limits: Subgroup 7 T_C=25°C Min	Subgroup 7 T_C=25°C Max	Subgroup 8 T_C=125°C Min	Subgroup 8 T_C=125°C Max	Subgroup 8 T_C=-55°C Min	Subgroup 8 T_C=-55°C Max	Unit
Truth table test 12/	3014	105	GND	H	H	GND	5.0 V	5.0 V	5.0 V	GND	GND	15/	5.0 V	H	GND	GND	GND	5.0 V	All outputs	See 13/,14/						
		106	"	H	H	5.0 V	5.0 V	5.0 V	5.0 V	"	GND	15/	"	H	GND	"	"	"	"							
		107	"	H	H	5.0 V	5.0 V	5.0 V	5.0 V	"	GND	15/	"	H	5.0 V	"	"	"	"							
		108	"	L	L	GND	GND	GND	GND	"	15/	5.0 V	"	L	GND	"	"	"	"							
		109	"	"	"	GND	GND	"	"	"	GND	15/	"	"	GND	"	"	"	"							
		110	5.0 V	"	"	5.0 V	5.0 V	"	"	"	"	"	"	"	5.0 V	5.0 V	5.0 V	"	"							
		111	"	"	"	5.0 V	GND	"	"	"	"	"	"	"	5.0 V	"	"	"	"							
		112	"	"	"	GND	GND	"	"	"	"	"	"	"	5.0 V	"	"	"	"							
		113	"	"	"	GND	GND	"	"	"	"	"	"	"	GND	"	"	"	"							
																				Subgroup 9 T_C=25°C Min	Subgroup 9 T_C=25°C Max	Subgroup 10 T_C=125°C Min	Subgroup 10 T_C=125°C Max	Subgroup 11 T_C=-55°C Min	Subgroup 11 T_C=-55°C Max	
t_{PHL1}	3003 Fig.9	114	IN	OUT		GND	GND	GND	GND	GND	IN	GND			GND	IN	IN	5.0 V	P/S control to Q_6	20	975	30	1465	20	975	ns
		115	"			"	"	"	"	"	"	"		OUT	"	"	"	"	P/S control to Q_7	"	"	"	"	"	"	"
		116	"		OUT	"	"	"	"	"	"	"			"	"	"	"	P/S control to Q_8	"	"	"	"	"	"	"
t_{PLH1}		117	"	OUT		"	"	"	"	"	"	"			"	"	"	"	P/S control to Q_6	"	"	"	"	"	"	"
		118	"			"	"	"	"	"	"	"		OUT	"	"	"	"	P/S control to Q_7	"	"	"	"	"	"	"
		119	"		OUT	"	"	"	"	"	"	"			"	"	"	"	P/S control to Q_8	"	"	"	"	"	"	"
t_{PHL2}		120		OUT						"	GND	IN	IN					"	Clock to Q_6	"	"	"	"	"	"	"
		121								"	"	"	"	OUT				"	Clock to Q_7	"	"	"	"	"	"	"
		122			OUT					"	"	"	"					"	Clock to Q_8	"	"	"	"	"	"	"
t_{PLH2}		123		OUT						"	"	"	"					"	Clock to Q_6	"	"	"	"	"	"	"
		124								"	"	"	"	OUT				"	Clock to Q_7	"	"	"	"	"	"	"
		125			OUT					"	"	"	"					"	Clock to Q_8	"	"	"	"	"	"	"
t_{THL}	3004 Fig.9	126		OUT						"	"	"	"					"	Q_6	13	700	18	1050	13	700	"
		127								"	"	"	"	OUT				"	Q_7	"	700	"	1050	"	700	"
		128			OUT					"	"	"	"					"	Q_8	"	700	"	1050	"	700	"
t_{TLH}		129		OUT						"	"	"	"					"	Q_6	"	900	"	1350	"	900	"
		130								"	"	"	"	OUT				"	Q_7	"	900	"	1350	"	900	"
		131			OUT					"	"	"	"					"	Q_8	"	900	"	1350	"	900	"
t_C 12/		132		OUT						"	"	"	"					"	Clock		1.0		1.4		1.0	μs
		133								"	"	"	"	OUT				"	Clock		1.0		1.4		1.0	μs
		134			OUT					"	"	"	"					"	Clock		1.0		1.4		1.0	μs

See footnotes at end of device type 04.

NOTES:

1/ Terminals not designated may be "HIGH" level logic, "LOW" level logic or open except as follows:
$V_{IC(pos)}$ tests; the V_{SS} terminal shall be open.
$V_{IC(neg)}$ tests; the V_{DD} terminal shall be open.
I_{SS} tests; the output terminals shall be open.
2/ Test numbers 23 through 29 shall be run in sequence. See 4.5.4
3/ V_{IH1} = 3.8 V at 25°C, 3.6 V at 125°C, 3.95 V at -55°C.
4/ I_{OH} = -80 μA at 25°C, -55 μA at 125°C, -100 μA at -55°C.
5/ Apply clock pulse; V_{IN} = 0 V to V_{DD} until proper output state is achieved.
6/ V_{IH2} = 9.5 V at 25°C, 9.25 V at 125°C, 9.75 V at -55°C.
7/ V_{IL1} = 1.1 V at 25°C, 0.85 V at 125°C, 1.35 V at -55°C.
8/ I_{OL} = 120 μA at 25°C, 85 μA at 125°C, 9.75 μA at -55°C.
9/ V_{IL2} = 2.8 V at 25°C, 2.55 V at 125°C, 3.05 V at -55°C.
10/ The device manufacturer may, at his option, measure I_{IL} and I_{IH} at 25°C for each individual input or measure all inputs together.
11/ See 4.4.1c.
12/ Test numbers 77 through 113 shall be run in sequence.
13/ The output voltage limits for each temperature are "H" = V_{DD} -0.5 V min. and "L" = V_{SS} +0.5 V max.
14/ The functional tests shall be performed at V_{IH} and V_{DD} ±5.0 V dc and ≥15 V dc.
15/ Apply clock pulse; V_{IN} = 0 Vdc to V_{DD}.
16/ The maximum clock frequency (f_{CL}) requirement is considered met if proper output state changes occur with the pulse repetition period set to that given in the limits column.

TABLE III. Group A inspection for device type 05.

Symbol	MIL-STD-883 method	Cases E,F,Z	Terminal conditions and limits 1/																Measured terminal	Test limits						Unit
			Recirc in	Clock	NC	NC	NC	Q	$\overline{Q}$	VSS	Delayed clock	Mode cont.	NC	NC	NC	NC	Data in	V_{DD}		Subgroup 1 T_C=25°C		Subgroup 2 T_C=125°C		Subgroup 3 T_C=-55°C		
		Test no.	1	2	3	4	5	6	7	8	9	10	11	12	13	14	15	16		Min	Max	Min	Max	Min	Max	
V_{IC} (pos)		1	1 mA															GND	Recirc in		1.5					V
		2		1 mA														'	Clock		"					"
		3										1 mA						'	Mode cont.		"					"
		4															1 mA	'	Data in		"					"
V_{IC} (neg)		5	-1 mA							GND									Recirc in		-6					"
		6		-1 mA						"									Clock		"					"
		7								"		-1 mA							Mode cont.		"					"
		8								"							-1 mA		Data in		"					"
I_{SS} 2/	3005	9	GND	3/						"		GND					15.0 V	15.0 V	None		-2.0		-20			μA
		10	"	"						"		"					GND	'	"		"		"			"
		11	"	"						"		"					15.0 V	'	"		"		"			"
		12	"	"						"		"					GND	'	"		"		"			"
		13	"	"						"		"					15.0 V	'	"		"		"			"
		14	"	"						"		"					GND	'	"		"		"			"
		15	"	"						"		"					15.0 V	'	"		"		"			"
		16	"	"						"		"					GND	'	"		"		"			"
		17	"	"						"		"					15.0 V	'	"		"		"			"
		18	"	"						"		"					GND	'	"		"		"			"
		19	"	"						"		"					15.0 V	'	"		"		"			"
		20	"	"						"		"					GND	'	"		"		"			"
		21	"	"						"		"					15.0 V	'	"		"		"			"
		22	"	"						"		"					GND	'	"		"		"			"
		23	"	"						"		"					15.0 V	'	"		"		"			"
		24	"	"						"		"					GND	'	"		"		"			"
		25	"	"						"		"					15.0 V	'	"		"		"			"
		26	"	"						"		"					GND	'	"		"		"			"
		27	"	"						"		"					15.0 V	'	"		"		"			"
		28	"	"						"		"					GND	'	"		"		"			"
		29	"	"						"		"					15.0 V	'	"		"		"			"
		30	"	"						"		"					GND	'	"		"		"			"
		31	"	"						"		"					15.0 V	'	"		"		"			"
		32	"	"						"		"					GND	'	"		"		"			"
		33	"	"						"		"					15.0 V	'	"		"		"			"
		34	"	"						"		"					GND	'	"		"		"			"
		35	"	"						"		"					15.0 V	'	"		"		"			"
		36	"	"						"		"					GND	'	"		"		"			"
		37	"	"						"		"					15.0 V	'	"		"		"			"
		38	"	"						"		"					GND	'	"		"		"			"
		39	"	"						"		"					15.0 V	'	"		"		"			"
		40	"	"						"		"					GND	'	"		"		"			"
		41	"	"						"		"					15.0 V	'	"		"		"			"
		42	"	"						"		"					GND	'	"		"		"			"
		43	"	"						"		"					15.0 V	'	"		"		"			"
		44	"	"						"		"					GND	'	"		"		"			"
		45	"	"						"		"					15.0 V	'	"		"		"			"
		46	"	"						"		"					GND	'	"		"		"			"
		47	"	"						"		"					15.0 V	'	"		"		"			"
		48	"	"						"		"					GND	'	"		"		"			"
		49	"	"						"		"					15.0 V	'	"		"		"			"
		50	"	"						"		"					GND	'	"		"		"			"
		51	"	"						"		"					15.0 V	'	"		"		"			"
		52	"	"						"		"					GND	'	"		"		"			"
		53	"	"						"		"					15.0 V	'	"		"		"			"
		54	"	"						"		"					GND	'	"		"		"			"
		55	"	"						"		"					15.0 V	'	"		"		"			"
		56	"	"						"		"					GND	'	"		"		"			"
		57	"	"						"		"					15.0 V	'	"		"		"			"
		58	"	"						"		"					GND	'	"		"		"			"
		59	"	"						"		"					15.0 V	'	"		"		"			"

TABLE III. Group A inspection for device type 05 - Continued.

Symbol	MIL-STD-883 method	Cases E,F,Z Test no.	Terminal conditions and limits 1/: Recirc in 1	Clock 2	NC 3	NC 4	NC 5	Q 6	$\overline{Q}$ 7	V_{SS} 8	Delayed clock 9	Mode Cont. 10	NC 11	NC 12	NC 13	NC 14	Data in 15	V_{DD} 16	Measured terminal	Test limits: Subgroup 1 T_C=25°C Min	Subgroup 1 Max	Subgroup 2 T_C=125°C Min	Subgroup 2 Max	Subgroup 3 T_C=-55°C Min	Subgroup 3 Max	Unit
I_{SS} 2/	3005	60	GND	3/						GND		GND					GND	15.0 V	None		-2.0		-20			μA
		61	"	"						"		"					15.0 V	"	"		"		"			"
		62	"	"						"		"					GND	"	"		"		"			"
		63	"	"						"		"					15.0 V	"	"		"		"			"
		64	"	"						"		"					GND	"	"		"		"			"
		65	"	"						"		"					15.0 V	"	"		"		"			"
		66	"	"						"		"					GND	"	"		"		"			"
		67	"	"						"		"					15.0 V	"	"		"		"			"
		68	"	"						"		"					GND	"	"		"		"			"
		69	"	"						"		"					15.0 V	"	"		"		"			"
		70	"	"						"		"					GND	"	"		"		"			"
		71	"	15.0 V						"		"					15.0 V	"	V_{SS}		"		"			"
		72	"	GND						"		"					GND	"	V_{SS}		"		"			"
		73	"	15.0 V						"		"					15.0 V	"	None		"		"			"
		74	15.0 V	"						"		"					GND	"	V_{SS}		"		"			"
		75	15.0 V	"						"		15.0 V					GND	"	V_{SS}		"		"			"
		76	GND	"						"		15.0 V					15.0 V	"	V_{SS}		"		"			"
V_{OH1}	3006	77	V_{IL1} 4/	5/				I_{OH1} 6/		"		V_{IL1}					V_{IH1} 9/	15.0 V	Q	4.5		4.5		4.5		V
		78	V_{IL1} 4/	5/					I_{OH2} 7/	"		V_{IL1}					V_{IL1}	5.0 V	$\overline{Q}$	4.5		4.5		4.5		"
		79	V_{IL1} 4/	V_{IH1}						"	I_{OH3} 8/	V_{IL1}					V_{IH1}	5.0 V	Delayed clock	4.5		4.5		4.5		
V_{OH2}		80	V_{IL2} 10/	5/						"		V_{IL2}					V_{IH2} 11/	12.5 V	Q	11.25		11.25		11.25		"
		81	V_{IL2} 10/	5/						"		V_{IL2}					V_{IL2}	12.5 V	$\overline{Q}$	11.25		11.25		11.25		"
		82	V_{IL2} 10/	V_{IH2}						"		V_{IL2}					V_{IH2}	12.5 V	Delayed clock	11.25		11.25		11.25		
V_{OL1}	3007	83	V_{IL1}	5/				I_{OL1} 12/		"		V_{IL1}					V_{IL1}	5.0 V	Q		0.5		0.5		0.5	"
		84	V_{IL1}	5/					I_{OL2} 13/	"		V_{IL1}					V_{IH1}	5.0 V	$\overline{Q}$		0.5		0.5		0.5	"
		85	V_{IL1}	V_{IL1}						"	I_{OL3} 14/	V_{IL1}					V_{IL1}	5.0 V	Delayed clock		0.5		0.5		0.5	
V_{OL2}		86	V_{IL2}	5/						"		V_{IL2}					V_{IL2}	12.5 V	Q		1.25		1.25		1.25	"
		87	V_{IL2}	5/						"		V_{IL2}					V_{IH2}	12.5 V	$\overline{Q}$		1.25		1.25		1.25	"
		88	V_{IL2}	V_{IL2}						"		V_{IL2}					V_{IL2}	12.5 V	Delayed clock		1.25		1.25		1.25	
I_{IH1} 15/	3010	89	15.0 V	15.0 V						"		15.0 V					15.0 V	15.0 V	All inputs together		4.0					μA
I_{IH2}		90	15.0 V	GND						"		GND					GND		Recirc in		1.0		45			"
		91	GND	15.0 V						"		GND					GND		Clock		"		"			"
		92	"	GND						"		15.0 V					GND		Mode control		"		"			"
		93	"	"						"		GND					15.0 V		Data in		"		"			"
I_{IL1} 15/	3009	94	"	"						"		"					GND		All inputs together		-4.0					"
I_{IL2}		95	"	"						"		"					"		Recirc in		-1.0		-45			"
		96	"	"						"		"					"		Clock		"		"			"
		97	"	"						"		"					"		Mode control		"		"			"
		98	"	"						"		"					"		Data in		"		"			"
																				Subgroup 4 T_C=25°C Min	Max					
C_i	3012	99	16/							GND								GND	Recirc in		12					pF
		100		16/						"								"	Clock		70					"
		101								"		16/						"	Mode control		12					"
		102								"							16/	"	Data in		12					"

See footnotes at end of device type 05.

TABLE III. Group A inspection for device type 05 - Continued.

Symbol	MIL-STD-883 method	Cases E,F,Z	Terminal conditions and limits 1/																Measured terminal	Test limits Subgroup 1 T_C=25°C		Subgroup 2 T_C=125°C		Subgroup 3 T_C=-55°C		Unit
		Test no.	Recirc in 1	Clock 2	NC 3	NC 4	NC 5	Q 6	$\overline{Q}$ 7	V_{SS} 8	Delayed clock 9	Mode cont. 10	NC 11	NC 12	NC 13	NC 14	Data in 15	V_{DD} 16		Min	Max	Min	Max	Min	Max	
Truth table test 17/	3014	103	GND	5.0 V						GND		GND					5.0 V	5.0 V	None	See 18/,19/,20/						
		104	GND	GND						"		'					5.0 V	"	"							
		105	GND	5.0 V						"		'					5.0 V	"	"							
		106	5.0 V	GND						"		'					GND	"	"							
		107	5.0 V	5.0 V						"		'					GND	"	"							
		108	GND	GND						"		'					5.0 V	"	"							
		109	"	5.0 V						"		'					"	"	"							
		110	"	GND						"		5.0 V					"	"	"							
		111	"	5.0 V						"		'					"	"	"							
		112	5.0 V	GND						"		'					GND	"	"							
		113	"	5.0 V						"		'					GND	"	"							
		114	"	21/						"		GND					5.0 V	"	"							
		115	"	5.0 V				H	L	"	H	'					"	"	All outputs							
		116	"	GND				H	L	"	L	'					"	"	"							
		117	"	5.0 V				L	H	"	H	'					"	"	"							
		118	"	GND				L	H	"	L	'					"	"	"							
		119	"	5.0 V				H	L	"	H	'					"	"	"							
		120	"	GND				H	L	"	L	'					"	"	"							
		121	"	5.0 V				L	H	"	H	'					"	"	"							
		122	"	GND				L	H	"	L	'					"	"	"							
		123	"	5.0 V				H	L	"	H	'					"	"	"							

Symbol	MIL-STD-883 method	Cases E,F,Z	Recirc in 1	Clock 2	NC 3	NC 4	NC 5	Q 6	$\overline{Q}$ 7	V_{SS} 8	Delayed clock 9	Mode cont. 10	NC 11	NC 12	NC 13	NC 14	Data in 15	V_{DD} 16	Measured terminal	Subgroup 9 T_C=25°C Min	Max	Subgroup 10 T_C=125°C Min	Max	Subgroup 11 T_C=-55°C Min	Max	Unit
t_{PHL1}	3003 Fig.10	124	GND	IN				OUT		GND		GND					IN	5.0 V	Clock to Q	13	1060	18	1590	13	1060	ns
t_{PHL2}		125	GND	"					OUT	"		GND					IN	"	Clock to $\overline{Q}$	"	1320	"	1980	"	1320	"
t_{PHL3}		126	GND	"						"	OUT	GND						"	Clock to delayed clock	"	650	"	975	"	650	"
t_{PHL4}		127	IN	"				OUT		"		5.0 V						"	Clock to Q	"	1060	"	1590	"	1060	"
t_{PLH1}		128	GND	"				OUT		"		GND					IN	"	Clock to Q	"	1060	"	1590	"	1060	"
t_{PLH2}		129	GND	"					OUT	"		GND					IN	"	Clock to $\overline{Q}$	"	1320	"	1980	"	1320	"
t_{PLH3}		130	GND	"						"	OUT	GND						"	Clock to delayed clock	"	650	"	975	"	650	"
t_{PLH4}		131	IN	"				OUT		"		5.0 V						"	Clock to Q	"	1060	"	1590	"	1060	"
t_{THL1}	3004 Fig.10	132	GND	"				OUT		"		GND					IN	"	Q	10	290	14	435	10	290	"
t_{THL2}		133	GND	"					OUT	"		GND					IN	"	$\overline{Q}$	"	1400	"	2100	"	1400	"
t_{THL3}		134	GND	"						"	OUT	GND						"	Delayed clock	"	350	"	525	"	350	"

TABLE III. Group A inspection for device type 05 - Continued.

Symbol	MIL-STD-883 Method	Cases E,F,Z Test no.	Terminal conditions and limits 1/ Recirc in 1	Clock 2	NC 3	NC 4	NC 5	Q 6	$\overline{Q}$ 7	V_{SS} 8	Delayed clock 9	Mode cont. 10	NC 11	NC 12	NC 13	NC 14	Data in 15	V_{DD} 16	Measured terminal	Test limits Subgroup 5 T_C=25°C Min	Max	Subgroup 10 T_C=125°C Min	Max	Subgroup 11 T_C=-55°C Min	Max	Unit
t_{TLH1}	3004 Fig.12	135	GND	IN				OUT				GND					IN	5.0 V	Q	10	340	14	510	12	340	ns
t_{TLH2}		136	GND	"					OUT			"					IN	"	$\overline{Q}$	"	1400	"	2100	"	1400	"
t_{TLH3}		137	GND	"							OUT	"						"	Delayed clock	"	350	"	525	"	350	"
f_{CL} (Max) 22/		138		"							OUT	"						"	Clock		1.25		1.81		1.25	µs
		139		"				OUT				"					IN	"	"		"		"		"	"
		140		"					OUT			"					IN	"	"		"		"		"	"
		141	IN	"				OUT				5.0 V						"	"		"		"		"	"
		142	IN	"					OUT			5.0 V						"	"		"		"		"	"

1/ Terminals not designated may be "HIGH" level logic, "LOW" level logic or open except as follows:
$V_{IC(pos)}$ tests; the V_{SS} terminal shall be open.
$V_{IC(neg)}$ tests; the V_{DD} terminal shall be open.
I_{SS} tests; the output terminals shall be open.
2/ Test numbers 9 through 76 shall be run in sequence. See 4.5.4
3/ Apply single clock pulse; V_{IN} = 0 V dc to V_{DD}.
4/ V_{IL1} = 1.1 V at 25°C, 0.85 V at 125°C, 1.35 V at -55°C.
5/ Apply clock pulse; V_{IN} = 0 V dc to V_{DD} until proper output state is achieved.
6/ I_{OH1} = -320 µA at 25°C, -225 µA at 125°C, -400 µA at -55°C.
7/ I_{OH2} = -90 µA at 25°C, -60 µA at 125°C, -110 µA at -55°C.
8/ I_{OH3} = -400 µA at 25°C, -280 µA at 125°C, -480 µA at -55°C.
9/ V_{IH1} = 3.8 V at 25°C, 3.6 V at 125°C, 3.95 V at -55°C.
10/ V_{IL2} = 2.8 V at 25°C, 2.55 V at 125°C, 3.05 V at -55°C.
11/ V_{IH2} = 9.5 V at 25°C, 9.25 V at 125°C, 9.75 V at -55°C.
12/ I_{OL1} = 1.3 mA at 25°C, 0.5 mA at 125°C, 1.5 mA at -55°C.
13/ I_{OL2} = 90 µA at 25°C, 60 µA at 125°C, 110 µA at -55°C.
14/ I_{OL3} = 400 µA at 25°C, 280 µA at 125°C, 480 µA at -55°C.
15/ The device manufacturer may, at his option, measure I_{IL} and I_{IH} at 25°C for each individual input or measure all inputs together.
16/ See 4.4.1c.
17/ Test numbers 103 through 143 shall be run in sequence.
18/ The output voltage limits for each temperature are "H" = V_{DD} -0.5 V min. and "L" = V_{SS} +0.5 V maximum.
19/ For all test conditions delayed clock (CL_D) is clock delayed by two inverters.
20/ The functional tests shall be performed at V_{IH} and V_{DD} ≤5.0 Vdc and ≥15 Vdc.
21/ Apply 59 clock pulses: V_{IN} = 0 V to V_{DD}.
22/ The maximum clock frequency (f_{CL}) requirement is considered met if proper output state changes occur with the pulse repetition period set to that given in the limits column.

TABLE III. Group A inspection for device type 06.

Symbol	MIL-STD-883-method	Cases J,K,U Symbol	Terminal conditions and limits 1/													
			B_8	B_7	B_6	B_5	B_4	B_3	B_2	B_1	AE	Serial In	A/B	V_{SS}	P/S	A/S
		Test no.	1	2	3	4	5	6	7	8	9	10	11	12	13	14
V_{IC} (pos)	2/	1									1 mA					
		2										1 mA				
		3											1 mA			
		4													1 mA	
		5														1 mA
		6														
V_{IC} (neg)		7									-1 mA			GND		
		8										-1 mA		"		
		9											-1 mA	"		
		10												"	-1 mA	
		11												"		-1 mA
		12												"		
I_{SS} 3/	3005	13									15.0 V	15.0 V	15.0 V	"	15.0 V	15.0 V
		14									"	GND	"	"	15.0 V	15.0 V
		15									"	"	"	"	15.0 V	GND
		16									"	"	"	"	GND	GND
		17									"	"	"	"	GND	15.0 V
		18									GND	"	"	"	GND	GND
		19									"	"	"	"	15.0 V	"
		20									"	"	GND	"	GND	"
		21									"	"	"	"	GND	"
		22	15.0 V	GND	15.0 V	GND	15.0 V	GND	15.0 V	GND	15.0 V	"	"	"	GND	"
		23	15.0 V	GND	15.0 V	GND	15.0 V	GND	15.0 V	GND	15.0 V	"	"	"	15.0 V	"
V_{OH1}	3006	24								4/	5.0 V		5.0 V	"	5.0 V	"
		25							4/		"		"	"	"	"
		26						4/			"		"	"	"	"
		27					4/				"		"	"	"	"
		28				4/					"		"	"	"	"
		29			4/						"		"	"	"	"
		30		4/							"		"	"	"	"
		31	4/								"		"	"	"	"
		32								6/	"		GND	"	"	"
		33							6/		"		"	"	"	"
		34						6/			"		"	"	"	"
		35					6/				"		"	"	"	"
		36				6/					"		"	"	"	"
		37			6/						"		"	"	"	"
		38		6/							"		"	"	"	"
		39	6/								"		"	"	"	"
		40									"	6/	"	"	GND	"
V_{OH2}		41									12.5 V		12.5 V	"	12.5 V	"
		42									"		"	"	"	"
		43									"		"	"	"	"
		44									"		"	"	"	"
		45									"		"	"	"	"
		46									"		"	"	"	"
		47									"		"	"	"	"
		48								7/	"		GND	"	"	"
		49							7/		"		"	"	"	"
		50						7/			"		"	"	"	"
		51					7/				"		"	"	"	"
		52				7/					"		"	"	"	"
		53			7/						"		"	"	"	"
		54		7/							"		"	"	"	"
		55	7/								"	7/	"	"	"	"
		56														
		57														

See footnotes at end of device type 06.

TABLE III. Group A inspection for device type 06.

Cases J,K,U Symbol	Clock	A_1	A_2	A_3	A_4	A_5	A_6	A_7	A_8	V_{DD}	Measured terminal	Subgroup 1 T_C=25°C Min	Subgroup 1 T_C=25°C Max	Subgroup 2 T_C=125°C Min	Subgroup 2 T_C=125°C Max	Subgroup 3 T_C=-55°C Min	Subgroup 3 T_C=-55°C Max	Unit
Test no.	15	16	17	18	19	20	21	22	23	24								
1										5.0 V	AE		1.5					V
2										"	Ser in		"					"
3										"	A/B		"					"
4										"	P/S		"					"
5										"	A/S		"					"
6	1 mA									"	Clock		"					"
7											AE		-6					"
8											Ser in		"					"
9											A/B		"					"
10											P/S		"					"
11											A/S		"					"
12	-1 mA										Clock		"					"
13	GND	GND	15.0 V	GND	15.0 V	GND	15.0 V	GND	15.0 V	15.0 V	V_{SS}		-1.0		-5.0			μA
14	15.0 V	15.0 V	GND	15.0 V	GND	15.0 V	GND	15.0 V	GND	"	V_{SS}		"		"			"
15	15.0 V	15.0 V	GND	15.0 V	GND	15.0 V	GND	15.0 V	GND	"	None		"		"			"
16	15.0 V	15.0 V	GND	15.0 V	GND	15.0 V	GND	15.0 V	GND	"	V_{SS}		"		"			"
17	GND	GND	15.0 V	GND	15.0 V	GND	15.0 V	GND	15.0 V	"	V_{SS}		"		"			"
18	"	"	"	"	"	"	"			"	None		"		"			"
19	"	"	"	"	"	"	"			"	V_{SS}		"		"			"
20	"	"	"	"	"	"	"			"	V_{SS}		"		"			"
21										"	None		"		"			"
22										"	V_{SS}		"		"			"
23										"	V_{SS}		"		"			"
24	5/	6/								5.0 V	B_1	4.5		4.5		4.5		V
25	"		6/							"	B_2	"		"		"		"
26	"			6/						"	B_3	"		"		"		"
27	"				6/					"	B_4	"		"		"		"
28	"					6/				"	B_5	"		"		"		"
29	"						6/			"	B_6	"		"		"		"
30	"							6/		"	B_7	"		"		"		"
31	"								6/	"	B_8	"		"		"		"
32	"	4/								"	A_1	"		"		"		"
33	"		4/							"	A_2	"		"		"		"
34	"			4/						"	A_3	"		"		"		"
35	"				4/					"	A_4	"		"		"		"
36	"					4/				"	A_5	"		"		"		"
37	"						4/			"	A_6	"		"		"		"
38	"							4/		"	A_7	"		"		"		"
39	"								4/	"	A_8	"		"		"		"
40	"	4/								"	A_1	"		"		"		"
41	"	7/								12.5 V	B_1	11.25		11.25		11.25		"
42	"		7/							"	B_2	"		"		"		"
43	"			7/						"	B_3	"		"		"		"
44	"				7/					"	B_4	"		"		"		"
45	"					7/				"	B_5	"		"		"		"
46	"						7/			"	B_6	"		"		"		"
47	"							7/		"	B_7	"		"		"		"
48	"								7/	"	B_8	"		"		"		"
49	"									"	A_1	"		"		"		"
50	"									"	A_2	"		"		"		"
51	"									"	A_3	"		"		"		"
52	"									"	A_4	"		"		"		"
53	"									"	A_5	"		"		"		"
54	"									"	A_6	"		"		"		"
55	"									"	A_7	"		"		"		"
56	"									"	A_8	"		"		"		"
57	"									"	A_1	"		"		"		"

TABLE III. Group A inspection for device type 06 - Continued.

Symbol	MIL-STD-883-method	Cases J,K,U Symbol	Terminal conditions and limits 1/													
			B_8	B_7	B_6	B_5	B_4	B_3	B_2	B_1	AE	Serial Ir	A/B	V_{SS}	Y/S	A/S
		Test no.	1	2	3	4	5	6	7	8	9	10	11	12	13	14
V_{OL1}	3007	58								8/	5.0 V		5.0 V	GND	5.0 V	GND
		59							8/		"		"	"	"	"
		60						8/			"		"	"	"	"
		61					8/				"		"	"	"	"
		62				8/					"		"	"	"	"
		63			8/						"		"	"	"	"
		64		8/							"		"	"	"	"
		65	8/								"		"	"	"	"
		66								9/	"		GND	"	"	"
		67							9/		"		"	"	"	"
		68						9/			"		"	"	"	"
		69					9/				"		"	"	"	"
		70				9/					"		"	"	"	"
		71			9/						"		"	"	"	"
		72		9/							"		"	"	GND	"
		73	9/								"		"	"	GND	"
		74									"	9/	"	"	GND	"
V_{OL2}		75									12.5 V		12.5 V	"	12.5 V	"
		76									"		"	"	"	"
		77									"		"	"	"	"
		78									"		"	"	"	"
		79									"		"	"	"	"
		80									"		"	"	"	"
		81									"		"	"	"	"
		82									"		"	"	"	"
		83								10/	"		GND	"	"	"
		84							10/		"		"	"	"	"
		85						10/			"		"	"	"	"
		86					10/				"		"	"	"	"
		87				10/					"		"	"	"	"
		88			10/						"		"	"	"	"
		89		10/							"		"	"	"	"
		90	10/								"		"	"	"	"
		91									"	10/	"	"	GND	"
I_{IH1} 11/	3010	92									15.0 V	15.0 V	15.0 V	"	15.0 V	15.0 V
		92A	15.0 V	15.0 V	15.0 V	15.0 V	15.0 V	15.0 V	15.0 V	15.0 V	GND	15.0 V	GND	"	15.0 V	15.0 V
I_{IH2}		93	15.0 V	GND	GND	GND	GND	GND	GND	GND	GND	GND	GND	"	GND	GND
		94	GND	15.0 V	GND	GND	"	"	"	"	"	"	"	"	"	"
		95	"	GND	15.0 V	GND	"	"	"	"	"	"	"	"	"	"
		96	"	"	GND	15.0 V	"	"	"	"	"	"	"	"	"	"
		97	"	"	"	GND	15.0 V	"	"	"	"	"	"	"	"	"
		98	"	"	"	"	GND	15.0 V	"	"	"	"	"	"	"	"
		99	"	"	"	"	"	GND	15.0 V	"	"	"	"	"	"	"
		100	"	"	"	"	"	"	GND	15.0 V	"	"	"	"	"	"
		101	"	"	"	"	"	"	"	GND	15.0 V	"	"	"	"	"
		102	"	"	"	"	"	"	"	"	GND	15.0 V	"	"	"	"
		103	"	"	"	"	"	"	"	"	"	GND	15.0 V	"	"	"
		104	"	"	"	"	"	"	"	"	"	"	GND	"	15.0 V	"
		105	"	"	"	"	"	"	"	"	"	"	"	"	GND	15.0 V
		106	"	"	"	"	"	"	"	"	"	"	"	"	"	GND
		107	"	"	"	"	"	"	"	"	"	"	"	"	"	"
		108	"	"	"	"	"	"	"	"	"	"	"	"	"	"
		109	"	"	"	"	"	"	"	"	"	"	"	"	"	"
		110	"	"	"	"	"	"	"	"	"	"	"	"	"	"
		111	"	"	"	"	"	"	"	"	"	"	"	"	"	"
		112	"	"	"	"	"	"	"	"	"	"	"	"	"	"
		113	"	"	"	"	"	"	"	"	"	"	"	"	"	"
		114	"	"	"	"	"	"	"	"	"	"	"	"	"	"

See footnotes at end of device type 06.

TABLE III. Group A inspection for device type 06 - Continued.

Cases J,K,U												Subgroup 1 T_c=25°C		Subgroup 2 T_c=125°C		Subgroup 3 T_c=-55°C		
Symbol	Clock	A_1	A_2	A_3	A_4	A_5	A_6	A_7	A_8	V_{DD}	Measured terminal	Min	Max	Min	Max	Min	Max	Unit
Test no.	15	16	17	18	19	20	21	22	23	24								
58	5/	9/								5.0 V	B_1		0.5		0.5		0.5	V
59	"		9/							"	B_2		"		"		"	"
60	"			9/						"	B_3		"		"		"	"
61	"				9/					"	B_4		"		"		"	"
62	"					9/				"	B_5		"		"		"	"
63	"						9/			"	B_6		"		"		"	"
64	"							9/		"	B_7		"		"		"	"
65	"								9/	"	B_8		"		"		"	"
66	"	8/								"	A_1		"		"		"	"
67	"		8/							"	A_2		"		"		"	"
68	"			8/						"	A_3		"		"		"	"
69	"				8/					"	A_4		"		"		"	"
70	"					8/				"	A_5		"		"		"	"
71	"						8/			"	A_6		"		"		"	"
72	"							8/		"	A_7		"		"		"	"
73	"								8/	"	A_8		"		"		"	"
74	"	8/								"	A_1		"		"		"	"
75	"	10/								12.5 V	B_1		1.25		1.25		1.25	"
76	"		10/							"	B_2		"		"		"	"
77	"			10/						"	B_3		"		"		"	"
78	"				10/					"	B_4		"		"		"	"
79	"					10/				"	B_5		"		"		"	"
80	"						10/			"	B_6		"		"		"	"
81	"							10/		"	B_7		"		"		"	"
82	"								10/	"	B_8		"		"		"	"
83	"									"	A_1		"		"		"	"
84	"									"	A_2		"		"		"	"
85	"									"	A_3		"		"		"	"
86	"									"	A_4		"		"		"	"
87	"									"	A_5		"		"		"	"
88	"									"	A_6		"		"		"	"
89	"									"	A_7		"		"		"	"
90	"									"	A_8		"		"		"	"
91	"									"	A_1		"		"		"	"
92	15.0 V	15.0 V	15.0 V	15.0 V	15.0 V	15.0 V	15.0 V	15.0 V	15.0 V	15.0 V	All "HIGH" level inputs together		14					nA
92A	15.0 V									"			12					"
93	GND	GND	GND	GND	GND	GND	GND	GND	GND	"	B_8		1.0		45			"
94	"	"	"	"	"	"	"	"	"	"	B_7		"		"			"
95	"	"	"	"	"	"	"	"	"	"	B_6		"		"			"
96	"	"	"	"	"	"	"	"	"	"	B_5		"		"			"
97	"	"	"	"	"	"	"	"	"	"	B_4		"		"			"
98	"	"	"	"	"	"	"	"	"	"	B_3		"		"			"
99	"	"	"	"	"	"	"	"	"	"	B_2		"		"			"
100	"	"	"	"	"	"	"	"	"	"	B_1		"		"			"
101	"	"	"	"	"	"	"	"	"	"	$\overline{AE}$		"		"			"
102	"	"	"	"	"	"	"	"	"	"	Ser IN		"		"			"
103	"	"	"	"	"	"	"	"	"	"	A/B		"		"			"
104	"	"	"	"	"	"	"	"	"	"	P/S		"		"			"
105	"	"	"	"	"	"	"	"	"	"	A/S		"		"			"
106	15.0 V	"	"	"	"	"	"	"	"	"	Clock		"		"			"
107	GND	15.0 V	"	"	"	"	"	"	"	"	A_1		"		"			"
108	"	GND	15.0 V	"	"	"	"	"	"	"	A_2		"		"			"
109	"	"	GND	15.0 V	"	"	"	"	"	"	A_3		"		"			"
110	"	"	"	GND	15.0 V	"	"	"	"	"	A_4		"		"			"
111	"	"	"	"	GND	15.0 V	"	"	"	"	A_5		"		"			"
112	"	"	"	"	"	GND	15.0 V	"	"	"	A_6		"		"			"
113	"	"	"	"	"	GND	GND	15.0 V	"	"	A_7		"		"			"
114	"	"	"	"	"	GND	GND	GND	15.0 V	"	A_8		"		"			"

TABLE III. Group A inspection for device type 06 - Continued.

Symbol	MIL-STD-883-method	Cases J,K,U Symbol	Terminal conditions and limits 1/													
			B_8	B_7	B_6	B_5	B_4	B_3	B_2	B_1	AE	Serial In	A/B	V_{SS}	P/S	A/S
		Test no.	1	2	3	4	5	6	7	8	9	10	11	12	13	14
I_{IL1} 11/	3009	115	GND	GND	GND	GND	GND	GND	GND	GND	GND	GND	GND	GND	GND	GND
I_{IL2}		116	"	"	"	"	"	"	"	"	"	"	"	"	"	"
		117	"	"	"	"	"	"	"	"	"	"	"	"	"	"
		118	"	"	"	"	"	"	"	"	"	"	"	"	"	"
		119	"	"	"	"	"	"	"	"	"	"	"	"	"	"
		120	"	"	"	"	"	"	"	"	"	"	"	"	"	"
		121	"	"	"	"	"	"	"	"	"	"	"	"	"	"
		122	"	"	"	"	"	"	"	"	"	"	"	"	"	"
		123	"	"	"	"	"	"	"	"	"	"	"	"	"	"
		124	"	"	"	"	"	"	"	"	"	"	"	"	"	"
		125	"	"	"	"	"	"	"	"	"	"	"	"	"	"
		126	"	"	"	"	"	"	"	"	"	"	"	"	"	"
		127	"	"	"	"	"	"	"	"	"	"	"	"	"	"
		128	"	"	"	"	"	"	"	"	"	"	"	"	"	"
		129	"	"	"	"	"	"	"	"	"	"	"	"	"	"
		130	"	"	"	"	"	"	"	"	"	"	"	"	"	"
		131	"	"	"	"	"	"	"	"	"	"	"	"	"	"
		132	"	"	"	"	"	"	"	"	"	"	"	"	"	"
		133	"	"	"	"	"	"	"	"	"	"	"	"	"	"
		134	"	"	"	"	"	"	"	"	"	"	"	"	"	"
		135	"	"	"	"	"	"	"	"	"	"	"	"	"	"
		136	"	"	"	"	"	"	"	"	"	"	"	"	"	"
		137	"	"	"	"	"	"	"	"	"	"	"	"	"	"
C_i	3012	138									12/			GND		
		139										12/		"		
		140											12/	"		
		141												"		
		142												"	12/	
		143												"		12/
Truth table test 13/	3014	144									5.0 V	GND	5.0 V	GND	5.0 V	GND
		145	L	H	L	H	L	H	L	H	5.0 V	"	"	"	5.0 V	"
		146	"	"	"	"	"	"	"	"	GND	"	"	"	GND	"
		147	"	"	"	"	"	"	"	"	5.0 V	"	"	"	"	"
		148	"	"	"	"	"	"	"	"	"	"	"	"	"	"
		149	H	L	H	L	H	L	H	L	"	"	"	"	"	"
		150	"	"	"	"	"	"	"	"	"	"	"	"	5.0 V	"
		151	"	"	"	"	"	"	"	"	"	5.0 V	"	"	GND	"
		152	"	"	"	"	"	"	"	"	"	"	"	"	GND	"
		153	L	H	L	H	L	H	L	H	"	"	"	"	GND	"
		154	H	L	H	L	H	L	H	L	"	"	"	"	5.0 V	5.0 V
		155	L	H	L	H	L	H	L	H	"	GND	"	"	"	"
		156	L	H	L	H	L	H	L	H	GND	"	"	"	"	"
		157	L	H	L	H	L	H	L	H	GND	"	"	"	"	"
		158									GND	"	GND	"	GND	"
		159	GND	5.0 V	GND	5.0 V	GND	5.0 V	GND	5.0 V	5.0 V	"	"	"	5.0 V	"
		160	5.0 V	GND	5.0 V	GND	5.0 V	GND	5.0 V	GND	"	5.0 V	"	"	"	"
		161	5.0 V	GND	5.0 V	GND	5.0 V	GND	5.0 V	GND	"	"	"	"	"	GND
		162	GND	5.0 V	GND	5.0 V	GND	5.0 V	GND	5.0 V	"	"	"	"	"	GND
		163	GND	5.0 V	GND	5.0 V	GND	5.0 V	GND	5.0 V	"	"	"	"	GND	GND

See footnotes at end of device type 06.

TABLE III. Group A inspection for device type 06 - Continued.

Cases J,K,U Symbol	Clock	A_1	A_2	A_3	A_4	A_5	A_6	A_7	A_8	V_{DD}	Measured terminal	Subgroup 1 T_C=25°C Min	Subgroup 1 T_C=25°C Max	Subgroup 2 T_C=125°C Min	Subgroup 2 T_C=125°C Max	Subgroup 3 T_C=-55°C Min	Subgroup 3 T_C=-55°C Max	Unit
Test no.	15	16	17	18	19	20	21	22	23	24								
115	GND	GND	GND	GND	GND	GND	GND	GND	GND	15.0 V	All inputs together		-22					nA
116	"	"	"	"	"	"	"	"	"	"	B_8		-1.0		-45			"
117	"	"	"	"	"	"	"	"	"	"	B_7		"		"			"
118	"	"	"	"	"	"	"	"	"	"	B_6		"		"			"
119	"	"	"	"	"	"	"	"	"	"	B_5		"		"			"
120	"	"	"	"	"	"	"	"	"	"	B_4		"		"			"
121	"	"	"	"	"	"	"	"	"	"	B_3		"		"			"
122	"	"	"	"	"	"	"	"	"	"	B_2		"		"			"
123	"	"	"	"	"	"	"	"	"	"	B_1		"		"			"
124	"	"	"	"	"	"	"	"	"	"	AE		"		"			"
125	"	"	"	"	"	"	"	"	"	"	Serial In		"		"			"
126	"	"	"	"	"	"	"	"	"	"	A/B		"		"			"
127	"	"	"	"	"	"	"	"	"	"	P/S		"		"			"
128	"	"	"	"	"	"	"	"	"	"	A/S		"		"			"
129	"	"	"	"	"	"	"	"	"	"	Clock		"		"			"
130	"	"	"	"	"	"	"	"	"	"	A_1		"		"			"
131	"	"	"	"	"	"	"	"	"	"	A_2		"		"			"
132	"	"	"	"	"	"	"	"	"	"	A_3		"		"			"
133	"	"	"	"	"	"	"	"	"	"	A_4		"		"			"
134	"	"	"	"	"	"	"	"	"	"	A_5		"		"			"
135	"	"	"	"	"	"	"	"	"	"	A_6		"		"			"
136	"	"	"	"	"	"	"	"	"	"	A_7		"		"			"
137	"	"	"	"	"	"	"	"	"	"	A_8		"		"			"
												Subgroup 4 T_C=25°C Min	Subgroup 4 T_C=25°C Max					
138										GND	AE		12					pF
139										"	Serial In		"					"
140										"	A/B		"					"
141										"	P/S		"					"
142										"	A/S		"					"
143	12/									"	Clock		"					"
												Subgroup 7 T_C=25°C Min	Subgroup 7 T_C=25°C Max	Subgroup 8 T_C=125°C Min	Subgroup 8 T_C=125°C Max	Subgroup 8 T_C=-55°C Min	Subgroup 8 T_C=-55°C Max	
144	GND	5.0 V	GND	5.0 V	GND	5.0 V	GND	5.0 V	GND	5.0 V	All outputs	See 14/, 15/						
145	5.0 V	"	"	"	"	"	"	"	"	"	"							
146	5.0 V	"	"	"	"	"	"	"	"	"	"							
147	5.0 V	"	"	"	"	"	"	"	"	"	"							
148	GND	"	"	"	"	"	"	"	"	"	"							
149	5.0 V	"	"	"	"	"	"	"	"	"	"							
150	5.0 V	"	"	"	"	"	"	"	"	"	"							
151	5.0 V	GND	5.0 V	GND	5.0 V	GND	5.0 V	GND	5.0 V	"	"							
152	GND	"	"	"	"	"	"	"	"	"	"							
153	"	"	"	"	"	"	"	"	"	"	"							
154	"	"	"	"	"	"	"	"	"	"	"							
155	"	5.0 V	GND	5.0 V	GND	5.0 V	GND	5.0 V	GND	"	"							
156	"	5.0 V	GND	5.0 V	GND	5.0 V	GND	5.0 V	GND	"	"							
157	5.0 V	GND	5.0 V	GND	5.0 v	GND	5.0 V	GND	5.0 V	"	"							
158	GND									"	"							
159	"	H	L	H	L	H	L	H	L	"	"							
160	"	L	H	L	H	L	H	L	H	"	"							
161	"	"	"	"	"	"	"	"	"	"	"							
162	"	"	"	"	"	"	"	"	"	"	"							
163	"	"	"	"	"	"	"	"	"	"	"							

TABLE III. Group A inspection for device type 06 - Continued.

Symbol	MIL-STD-883-method	Cases J,K,U Symbol	Terminal conditions and limits 1/													
			B_8	B_7	B_6	B_5	B_4	B_3	B_2	B_1	AE	Serial In	A/B	V_{SS}	P/S	A/S
		Test no.	1	2	3	4	5	6	7	8	9	10	11	12	13	14
Truth table test 13/	3014	164	GND	5.0 V	GND	5.0 V	GND	5.0 V	GND	5.0 V	5.0 V	5.0 V	GND	GND	GND	5.0 V
		165	GND	5.0 V	GND	5.0 V	GND	5.0 V	GND	5.0 V	"	"	"	"	5.0 V	GND
		166	GND	5.0 V	GND	5.0 V	GND	5.0 V	GND	5.0 V	"	"	"	"	"	"
		167	5.0 V	GND	5.0 V	GND	5.0 V	GND	5.0 V	GND	"	"	"	"	"	"
		168	"	"	"	"	"	"	"	"	"	"	"	"	"	"
		169	"	"	"	"	"	"	"	"	"	"	"	"	GND	"
		170	"	"	"	"	"	"	"	"	"	"	"	"	GND	"
t_{PHL1}	3003 Fig.11	171								OUT	5.0 V		5.0 V	GND	5.0 V	GND
		172							OUT		"		"	"	"	"
		173						OUT			"		"	"	"	"
		174					OUT				"		"	"	"	"
		175				OUT					"		"	"	"	"
		176			OUT						"		"	"	"	"
		177		OUT							"		"	"	"	"
		178	OUT								"		"	"	"	"
t_{PLH1}		179								OUT	"		"	"	"	"
		180							OUT		"		"	"	"	"
		181						OUT			"		"	"	"	"
		182					OUT				"		"	"	"	"
		183				OUT					"		"	"	"	"
		184			OUT						"		"	"	"	"
		185		OUT							"		"	"	"	"
		186	OUT								"		"	"	"	"
t_{PHL2}		187								IN	"		GND	"	"	"
		188							IN		"		"	"	"	"
		189						IN			"		"	"	"	"
		190					IN				"		"	"	"	"
		191				IN					"		"	"	"	"
		192			IN						"		"	"	"	"
		193		IN							"		"	"	"	"
		194	IN								"		"	"	"	"

See footnotes at end of device type 06.

TABLE III. Group A inspection for device type 06 - Continued.

Cases J,K,U												Subgroup 1 T_C=25°C		Subgroup 2 T_C=125°C		Subgroup 3 T_C=-55°C		Unit
Symbol	Clock	A_1	A_2	A_3	A_4	A_5	A_6	A_7	A_8	V_{DD}	Measured terminal	Min	Max	Min	Max	Min	Max	
Test no.	15	16	17	18	19	20	21	22	23	24								
164	GND	L	H	L	H	L	H	L	H	5.0 V	All outputs	14/, 15/						
165	"	H	L	H	L	H	L	H	L	"	"							
166	"	H	L	H	L	H	L	H	L	"	"							
167	"	H	L	H	L	H	L	H	L	"	"							
168	5.0 V	L	H	L	H	L	H	L	H	"	"							
169	GND	L	H	L	H	L	H	L	H	"	"							
170	5.0 V	H	L	H	L	H	L	H	L	"	"							
												Subgroup 9 T_C=25°C		Subgroup 10 T_C=125°C		Subgroup 11 T_C=-55°C		
												Min	Max	Min	Max	Min	Max	
171	IN	IN								5.0 V	Clock to B_1	13	1100	18	1300	13	1000	ns
172	"		IN							"	Clock to B_2	"	"	"	"	"	"	"
173	"			IN						"	Clock to B_3	"	"	"	"	"	"	"
174	"				IN					"	Clock to B_4	"	"	"	"	"	"	"
175	"					IN				"	Clock to B_5	"	"	"	"	"	"	"
176	"						IN			"	Clock to B_6	"	"	"	"	"	"	"
177	"							IN		"	Clock to B_7	"	"	"	"	"	"	"
178	"								IN	"	Clock to B_8	"	"	"	"	"	"	"
179	"	IN								"	Clock to B_1	"	1300	"	1500	"	1200	"
180	"		IN							"	Clock to B_2	"	"	"	"	"	"	"
181	"			IN						"	Clock to B_3	"	"	"	"	"	"	"
182	"				IN					"	Clock to B_4	"	"	"	"	"	"	"
183	"					IN				"	Clock to B_5	"	"	"	"	"	"	"
184	"						IN			"	Clock to B_6	"	"	"	"	"	"	"
185	"							IN		"	Clock to B_7	"	"	"	"	"	"	"
186	"								IN	"	Clock to B_8	"	"	"	"	"	"	"
187	"	OUT								"	Clock to A_1	"	1100	"	1300	"	1000	"
188	"		OUT							"	Clock to A_2	"	"	"	"	"	"	"
189	"			OUT						"	Clock to A_3	"	"	"	"	"	"	"
190	"				OUT					"	Clock to A_4	"	"	"	"	"	"	"
191	"					OUT				"	Clock to A_5	"	"	"	"	"	"	"
192	"						OUT			"	Clock to A_6	"	"	"	"	"	"	"
193	"							OUT		"	Clock to A_7	"	"	"	"	"	"	"
194	"								OUT	"	Clock to A_8	"	"	"	"	"	"	"

TABLE III. Group A inspection for device type 06 - Continued.

Symbol	MIL-STD-883-method	Cases J,K,U Symbol	Terminal conditions and limits 1/													
			B_8	B_7	B_6	B_5	B_4	B_3	B_2	B_1	AE	Serial In	A/B	V_{SS}	P/S	A/S
		Test no.	1	2	3	4	5	6	7	8	9	10	11	12	13	14
t_{PLH2}	3003 Fig. 11	195								IN	5.0 V		GND	GND	5.0 V	GND
		196							IN		"		"	"	"	"
		197						IN			"		"	"	"	"
		198					IN				"		"	"	"	"
		199				IN					"		"	"	"	"
		200			IN						"		"	"	"	"
		201		IN							"		"	"	"	"
		202	IN								"		"	"	"	"
t_{PHL3}		203								OUT	"	IN	5.0 V	"	GND	"
		204							OUT		"	"	"	"	"	"
		205						OUT			"	"	"	"	"	"
		206					OUT				"	"	"	"	"	"
		207				OUT					"	"	"	"	"	"
		208			OUT						"	"	"	"	"	"
		209		OUT							"	"	"	"	"	"
		210	OUT								"	"	"	"	"	"
t_{PLH3}		211								OUT	"	"	"	"	"	"
		212							OUT		"	"	"	"	"	"
		213						OUT			"	"	"	"	"	"
		214					OUT				"	"	"	"	"	"
		215				OUT					"	"	"	"	"	"
		216			OUT						"	"	"	"	"	"
		217		OUT							"	"	"	"	"	"
		218	OUT								"	"	"	"	"	"
t_{PHL4}		219									"	"	GND	"	"	"
		220									"	"	"	"	"	"
		221									"	"	"	"	"	"
		222									"	"	"	"	"	"
		223									"	"	"	"	"	"
		224									"	"	"	"	"	"
		225									"	"	"	"	"	"
		226									"	"	"	"	"	"

See footnotes at end of device type 06.

TABLE III. Group A inspection for device type 06 - Continued.

Cases C,K,U Symbol	Clock	A_1	A_2	A_3	A_4	A_5	A_6	A_7	A_8	V_{DD}	Measured terminal	Subgroup 9 T_C=25°C		Subgroup 10 T_C=125°C		Subgroup 11 T_C=-55°C		Unit
Test no.	15	16	17	18	19	20	21	22	23	24		Min	Max	Min	Max	Min	Max	
195	IN	OUT								5.0 V	Clock to A_1	13	1300	18	1500	13	1200	ns
196	"		OUT							"	Clock to A_2	"	"	"	"	"	"	"
197	"			OUT						"	Clock to A_3	"	"	"	"	"	"	"
198	"				OUT					"	Clock to A_4	"	"	"	"	"	"	"
199	"					OUT				"	Clock to A_5	"	"	"	"	"	"	"
200	"						OUT			"	Clock to A_6	"	"	"	"	"	"	"
201	"							OUT		"	Clock to A_7	"	"	"	"	"	"	"
202	"								OUT	"	Clock to A_8	"	"	"	"	"	"	"
203	"									"	Clock to B_1	"	1100	"	1300	"	1000	"
204	"									"	Clock to B_2	"	"	"	"	"	"	"
205	"									"	Clock to B_3	"	"	"	"	"	"	"
206	"									"	Clock to B_4	"	"	"	"	"	"	"
207	"									"	Clock to B_5	"	"	"	"	"	"	"
208	"									"	Clock to B_6	"	"	"	"	"	"	"
209	"									"	Clock to B_7	"	"	"	"	"	"	"
210	"									"	Clock to B_8	"	"	"	"	"	"	"
211	"									"	Clock to B_1	"	1300	"	1500	"	1200	"
212	"									"	Clock to B_2	"	"	"	"	"	"	"
213	"									"	Clock to B_3	"	"	"	"	"	"	"
214	"									"	Clock to B_4	"	"	"	"	"	"	"
215	"									"	Clock to B_5	"	"	"	"	"	"	"
216	"									"	Clock to B_6	"	"	"	"	"	"	"
217	"									"	Clock to B_7	"	"	"	"	"	"	"
218	"									"	Clock to B_8	"	"	"	"	"	"	"
219	"	OUT								"	Clock to A_1	"	1100	"	1300	"	1000	"
220	"		OUT							"	Clock to A_2	"	"	"	"	"	"	"
221	"			OUT						"	Clock to A_3	"	"	"	"	"	"	"
222	"				OUT					"	Clock to A_4	"	"	"	"	"	"	"
223	"					OUT				"	Clock to A_5	"	"	"	"	"	"	"
224	"						OUT			"	Clock to A_6	"	"	"	"	"	"	"
225	"							OUT		"	Clock to A_7	"	"	"	"	"	"	"
226	"								OUT	"	Clock to A_8	"	"	"	"	"	"	"

TABLE III. Group A inspection for device type 06 - Continued.

Symbol	MIL-STD-883-method	Cases J,K,U Symbol	Terminal conditions and limits 1/													
			B_8	B_7	B_6	B_5	B_4	B_3	B_2	B_1	AE	Serial In	A/B	V_{SS}	P/S	A/S
		Test no.	1	2	3	4	5	6	7	8	9	10	11	12	13	14
t_{PLH4}	3003 Fig. 11	227									5.0 V	IN	GND	GND	GND	GND
		228									"	"	"	"	"	"
		229									"	"	"	"	"	"
		230									"	"	"	"	"	"
		231									"	"	"	"	"	"
		232									"	"	"	"	"	"
		233									"	"	"	"	"	"
		234									"	"	"	"	"	"
t_{THL1}	3004 Fig. 11	235								OUT	"		5.0 V	"	5.0 V	"
		236							OUT		"		"	"	"	"
		237						OUT			"		"	"	"	"
		238					OUT				"		"	"	"	"
		239				OUT					"		"	"	"	"
		240			OUT						"		"	"	"	"
		241		OUT							"		"	"	"	"
		242	OUT								"		"	"	"	"
t_{TLH1}		243								OUT	"		"	"	"	"
		244							OUT		"		"	"	"	"
		245						OUT			"		"	"	"	"
		246					OUT				"		"	"	"	"
		247				OUT					"		"	"	"	"
		248			OUT						"		"	"	"	"
		249		OUT							"		"	"	"	"
		250	OUT								"		"	"	"	"
t_{THL2}		251								IN	"		GND	"	"	"
		252							IN		"		"	"	"	"
		253						IN			"		"	"	"	"
		254					IN				"		"	"	"	"
		255				IN					"		"	"	"	"
		256			IN						"		"	"	"	"
		257		IN							"		"	"	"	"
		258	IN								"		"	"	"	"
t_{TLH2}		259								IN	"		"	"	"	"
		260							IN		"		"	"	"	"
		261						IN			"		"	"	"	"
		262					IN				"		"	"	"	"
		263				IN					"		"	"	"	"
		264			IN						"		"	"	"	"
		265		IN							"		"	"	"	"
		266	IN								"		"	"	"	"

See footnotes at end of device type 06.

TABLE III. Group A inspection for device type 06 - Continued.

Cases J,K,U Symbol	Clock	A_1	A_2	A_3	A_4	A_5	A_6	A_7	A_8	V_{DD}	Measured terminal	Subgroup 9 T_C=25°C		Subgroup 10 T_C=125°C		Subgroup 11 T_C=-55°C		Unit
Test no.	15	16	17	18	19	20	21	22	23	24		Min	Max	Min	Max	Min	Max	
227	IN	OUT								5.0 V	Clock to A_1	13	1300	18	1500	13	1200	ns
228	"		OUT							"	Clock to A_2	"	"	"	"	"	"	"
229	"			OUT						"	Clock to A_3	"	"	"	"	"	"	"
230	"				OUT					"	Clock to A_4	"	"	"	"	"	"	"
231	"					OUT				"	Clock to A_5	"	"	"	"	"	"	"
232	"						OUT			"	Clock to A_6	"	"	"	"	"	"	"
233	"							OUT		"	Clock to A_7	"	"	"	"	"	"	"
234	"								OUT	"	Clock to A_8	"	"	"	"	"	"	"
235	"	IN								"	B_1	10	1100	14	1300	10	1000	"
236	"		IN							"	B_2	"	"	"	"	"	"	"
237	"			IN						"	B_3	"	"	"	"	"	"	"
238	"				IN					"	B_4	"	"	"	"	"	"	"
239	"					IN				"	B_5	"	"	"	"	"	"	"
240	"						IN			"	B_6	"	"	"	"	"	"	"
241	"							IN		"	B_7	"	"	"	"	"	"	"
242	"								IN	"	B_8	"	"	"	"	"	"	"
243	"	IN								"	B_1	"	2000	"	2300	"	1800	"
244	"		IN							"	B_2	"	"	"	"	"	"	"
245	"			IN						"	B_3	"	"	"	"	"	"	"
246	"				IN					"	B_4	"	"	"	"	"	"	"
247	"					IN				"	B_5	"	"	"	"	"	"	"
248	"						IN			"	B_6	"	"	"	"	"	"	"
249	"							IN		"	B_7	"	"	"	"	"	"	"
250	"								IN	"	B_8	"	"	"	"	"	"	"
251	"	OUT								"	A_1	"	1100	"	1300	"	1000	"
252	"		OUT							"	A_2	"	"	"	"	"	"	"
253	"			OUT						"	A_3	"	"	"	"	"	"	"
254	"				OUT					"	A_4	"	"	"	"	"	"	"
255	"					OUT				"	A_5	"	"	"	"	"	"	"
256	"						OUT			"	A_6	"	"	"	"	"	"	"
257	"							OUT		"	A_7	"	"	"	"	"	"	"
258	"								OUT	"	A_8	"	"	"	"	"	"	"
259	"	OUT								"	A_1	"	2000	"	2300	"	1800	"
260	"		OUT							"	A_2	"	"	"	"	"	"	"
261	"			OUT						"	A_3	"	"	"	"	"	"	"
262	"				OUT					"	A_4	"	"	"	"	"	"	"
263	"					OUT				"	A_5	"	"	"	"	"	"	"
264	"						OUT			"	A_6	"	"	"	"	"	"	"
265	"							OUT		"	A_7	"	"	"	"	"	"	"
266	"								OUT	"	A_8	"	"	"	"	"	"	"

TABLE III. Group A inspection for device type 06 - Continued.

Symbol	MIL-STD-883-method	Cases J,K,U Symbol	Terminal conditions and limits 1/													
			B_8	B_7	B_6	B_5	B_4	B_3	B_2	B_1	AE	Serial In	A/B	V_{SS}	P/S	A/S
		Test no.	1	2	3	4	5	6	7	8	9	10	11	12	13	14
f_{CL} 16/	3004 Fig. 11	267									5.0 V	IN	GND	GND	GND	GND
		268									"	"	"	"	"	"
		269									"	"	"	"	"	"
		270									"	"	"	"	"	"
		271									"	"	"	"	"	"
		272									"	"	"	"	"	"
		273									"	"	"	"	"	"
		274									"	"	"	"	"	"
		275								OUT	"	"	5.0 V	"	"	"
		276							OUT		"	"	"	"	"	"
		277						OUT			"	"	"	"	"	"
		278					OUT				"	"	"	"	"	"
		279				OUT					"	"	"	"	"	"
		280			OUT						"	"	"	"	"	"
		281		OUT							"	"	"	"	"	"
		282	OUT								"	"	"	"	"	"

1/ Terminals not designated may be "HIGH" level logic, "LOW" level logic or open except as follows:
$V_{IC(pos)}$ tests; the V_{SS} terminal shall be open.
$V_{IC(neg)}$ tests; the V_{DD} terminal shall be open.
I_{SS} tests; the output terminals shall be open.
I_{IH1} tests; the undesignated terminals shall be open.

2/ In device type 06, circuit C, all terminals except 12 and 24 are inputs connected to gate structures, therefore, the table III, $V_{IC(pos)}$ and $V_{IC(neg)}$ tests shall be expanded to include testing terminals 1 through 8, and 16 through 23.

3/ Test numbers 13 through 23 shall be run in sequence. See 4.5.4

4/ I_{OH} = -50 µA at 25°C, -35 µA at 125°C, -75 µA at -55°C.

5/ Apply clock pulse; V_{IN} = 0 V to V_{DD} until proper output state is achieved.

6/ V_{IH1} = 3.8 V at 25°C, 3.6 V at 125°C, 3.95 V at -55°C.

7/ V_{IH2} = 9.5 V at 25°C, 9.25 V at 125°C, 9.75 V at -55°C.

8/ I_{OL} = 100 µA at 25°C, 70 µA at 125°C, 124 µA at -55°C.

9/ V_{IL1} = 1.1 V at 25°C, 0.85 V at 125°C, 1.35 V at -55°C.

10/ V_{IL2} = 2.8 V at 25°C, 2.55 V at 125°C, 3.05 V at -55°C.

11/ The device manufacturer may, at his option, measure I_{IL} and I_{IH} at 25°C for each individual input or measure all inputs together.

12/ See 4.4.1c.

13/ Test numbers 144 through 170 shall be run in sequence.

14/ The output voltage limits for each temperature are "H" = V_{DD} -0.5 V min. and "L" = V_{SS} +0.5 V maximum.

15/ The functional tests shall be performed at V_{IH} and V_{DD} $\leq$5.0 V dc and $\geq$15 V dc.

16/ The maximum clock frequency (f_{CL}) requirement is considered met if proper output state changes occur with the pulse repetition period set to that given in the limits column.

TABLE III. Group A inspection for device type 06 - Continued.

Cases J,K,U												Subgroup 9 T_C=25°C		Subgroup 10 T_C=125°C		Subgroup 11 T_C=-55°C		Unit
Symbol	Clock	A_1	A_2	A_3	A_4	A_5	A_6	A_7	A_8	V_{DD}	Measured terminal							
Test no.	15	16	17	18	19	20	21	22	23	24		Min	Max	Min	Max	Min	Max	
267	IN	OUT								5.0 V	Clock		1.3		1.9		1.3	µs
268	"		OUT							"	"		"		"		"	"
269	"			OUT						"	"		"		"		"	"
270	"				OUT					"	"		"		"		"	"
271	"					OUT				"	"		"		"		"	"
272	"						OUT			"	"		"		"		"	"
273	"							OUT		"	"		"		"		"	"
274	"								OUT	"	"		"		"		"	"
275	"									"	"		"		"		"	"
276	"									"	"		"		"		"	"
277	"									"	"		"		"		"	"
278	"									"	"		"		"		"	"
279	"									"	"		"		"		"	"
280	"									"	"		"		"		"	"
281	"									"	"		"		"		"	"
282	"									"	"		"		"		"	"

TABLE III. Group A inspection for device type 51.

Symbol	MIL-STD-883 method	Cases A, C, D, X, Y Symbol	Terminal conditions and limits 1/														Measured terminal	Test limits						Unit
			D_1	NC	Clock	D_2	D_3	D_4	V_{SS}	D_{4+4}	D_{4+5}	D_{3+4}	D_{2+4}	D_{2+5}	D_{1+4}	V_{DD}		Subgroup 1 T_C = 25°C		Subgroup 2 T_C = 125°C		Subgroup 3 T_C = -55°C		
		Test no.	1	2	3	4	5	6	7	8	9	10	11	12	13	14		Min	Max	Min	Max	Min	Max	
V_{IC} (pos)		1	1 mA													GND	D_1		1.5					V
		2			1 mA											"	Clock		"					"
		3				1 mA										"	D_2		"					"
		4					1 mA									"	D_3		"					"
		5						1 mA								"	D_4		"					"
V_{IC} (neg)		6	-1 mA						GND								D_1		-5.0					"
		7			-1 mA				"								Clock		"					"
		8				-1 mA			"								D_2		"					"
		9					-1 mA		"								D_3		"					"
		10						-1 mA	"								D_4		"					"
I_{SS} 2/	3005	11	GND		3/	GND	GND	GND	"							18.0 V	None		-0.5		-3.0			μA
		12	18.0 V		"	18.0 V	18.0 V	18.0 V	"							"	"		"		"			"
		13	GND		"	GND	GND	GND	"							"	"		"		"			"
		14	18.0 V		"	18.0 V	18.0 V	18.0 V	"							"	"		"		"			"
		15	GND		"	GND	GND	GND	"							"	"		"		"			"
		16	18.0 V		GND	18.0 V	18.0 V	18.0 V	"							"	V_{SS}		"		"			"
		17	18.0 V		18.0 V	18.0 V	18.0 V	18.0 V	"							"	V_{SS}		"		"			"
		18	18.0 V		GND	18.0 V	18.0 V	18.0 V	"							"	None		"		"			"
		19	GND		GND	GND	GND	GND	"							"	V_{SS}		"		"			"
V_{OH3}	3006	20	15.0 V		4/	15.0 V	15.0 V	15.0 V	"							15.0 V	D_{4+4}	14.95		14.95		14.95		V
		21	"		"	"	"	"	"							"	D_{4+5}	"		"		"		"
		22	"		"	"	"	"	"							"	D_{3+4}	"		"		"		"
		23	"		"	"	"	"	"							"	D_{2+4}	"		"		"		"
		24	"		"	"	"	"	"							"	D_{2+5}	"		"		"		"
		25	"		"	"	"	"	"							"	D_{1+4}	"		"		"		"
V_{OL3}	3007	26	GND		"	GND	GND	GND	"							"	D_{4+4}		0.05		0.05		0.05	"
		27	"		"	"	"	"	"							"	D_{4+5}		"		"		"	"
		28	"		"	"	"	"	"							"	D_{3+4}		"		"		"	"
		29	"		"	"	"	"	"							"	D_{2+4}		"		"		"	"
		30	"		"	"	"	"	"							"	D_{2+5}		"		"		"	"
		31	"		"	"	"	"	"							"	D_{1+4}		"		"		"	"
V_{IH1} 11/		32	5/		5/	5/	5/	5/	"	5/	5/	5/	5/	5/	5/	5/	All outputs	5/	5/	5/	5/	5/	5/	5/
V_{IH2} 11/		33	"		"	"	"	"	"	"	"	"	"	"	"	"	"	"	"	"	"	"	"	"	"
V_{IH3} 11/		34	"		"	"	"	"	"	"	"	"	"	"	"	"	"	"	"	"	"	"	"	"	"
V_{IL1} 11/		35	"		"	"	"	"	"	"	"	"	"	"	"	"	"	"	"	"	"	"	"	"	"
V_{IL2} 11/		36	"		"	"	"	"	"	"	"	"	"	"	"	"	"	"	"	"	"	"	"	"	"
V_{IL3} 11/		37	"		"	"	"	"	"	"	"	"	"	"	"	"	"	"	"	"	"	"	"	"	"
I_{OL1}		38	GND		4/	GND	GND	GND	"	0.4 V						5.0 V	D_{4+4}		0.51		0.36		0.64	mA
		39	"		"	"	"	"	"		0.4 V					"	D_{4+5}		"		"		"	"
		40	"		"	"	"	"	"			0.4 V				"	D_{3+4}		"		"		"	"
		41	"		"	"	"	"	"				0.4 V			"	D_{2+4}		"		"		"	"
		42	"		"	"	"	"	"					0.4 V		"	D_{2+5}		"		"		"	"
		43	"		"	"	"	"	"						0.4 V	"	D_{1+4}		"		"		"	"
I_{OL2}		44	"		"	"	"	"	"	1.5 V						15.0 V	D_{4+4}		3.4		2.4		4.2	"
		45	"		"	"	"	"	"		1.5 V					"	D_{4+5}		"		"		"	"
		46	"		"	"	"	"	"			1.5 V				"	D_{3+4}		"		"		"	"
		47	"		"	"	"	"	"				1.5 V			"	D_{2+4}		"		"		"	"
		48	"		"	"	"	"	"					1.5 V		"	D_{2+5}		"		"		"	"
		49	"		"	"	"	"	"						1.5 V	"	D_{1+4}		"		"		"	"

See footnotes at end of device type 51.

TABLE III. Group A inspection for device type 51 - Continued.

Symbol	MIL-STD-883 method	Cases A, C, D, X, Y Symbol	Test no.	Terminal conditions and limits 1/															Measured terminal	Test limits						Unit
				D_1	NC	Clock	D_2	D_3	D_4	V_{SS}	D_{4+4}	D_{4+5}	D_{3+4}	D_{2+4}	D_{2+5}	D_{1+4}	V_{DD}			Subgroup 1 T_C = 25°C		Subgroup 2 T_C = 125°C		Subgroup 3 T_C = -55°C		
				1	2	3	4	5	6	7	8	9	10	11	12	13	14			Min	Max	Min	Max	Min	Max	
I_{OH1}			50	5.0 V		4/	5.0 V	5.0 V	5.0 V	GND	4.6 V						5.0 V	D_{4+4}		-0.51		-0.36		-0.64		mA
			51	"		"	"	"	"	"		4.6 V					"	D_{4+5}		"		"		"		"
			52	"		"	"	"	"	"			4.6 V				"	D_{3+4}		"		"		"		"
			53	"		"	"	"	"	"				4.6 V			"	D_{2+4}		"		"		"		"
			54	"		"	"	"	"	"					4.6 V		"	D_{2+5}		"		"		"		"
			55	"		"	"	"	"	"						4.6 V	"	D_{1+4}		"		"		"		"
I_{OH2}			56	15.0 V		"	15.0 V	15.0 V	15.0 V	"	13.5 V						15.0 V	D_{4+4}		-3.4		-2.4		-4.2		"
			57	"		"	"	"	"	"		13.5 V					"	D_{4+5}		"		"		"		"
			58	"		"	"	"	"	"			13.5 V				"	D_{3+4}		"		"		"		"
			59	"		"	"	"	"	"				13.5 V			"	D_{2+4}		"		"		"		"
			60	"		"	"	"	"	"					13.5 V		"	D_{2+5}		"		"		"		"
			61	"		"	"	"	"	"						13.5 V	"	D_{1+4}		"		"		"		"
I_{IH1} 6/	3010		62	18.0 V		18.0 V	18.0 V	18.0 V	18.0 V	"							18.0 V	All inputs together			5.0					nA
I_{IH2}			63	18.0 V		GND	GND	GND	GND	"							"	D_1			1.0		45			"
			64	GND		18.0 V	GND	GND	"	"							"	Clock			"		"			"
			65	"		GND	18.0 V	GND	"	"							"	D_2			"		"			"
			66	"		GND	GND	18.0 V	"	"							"	D_3			"		"			"
			67	"		GND	GND	GND	18.0 V	"							"	D_4			"		"			"
I_{IL1} 6/	3009		68	GND		GND	GND	GND	GND	"							"	All inputs together			-5.0					"
I_{IL2}			69	GND		18.0 V	18.0 V	18.0 V	18.0 V	"							"	D_1			-1.0		-45			"
			70	18.0 V		GND	18.0 V	18.0 V	"	"							"	Clock			"		"			"
			71	"		18.0 V	GND	18.0 V	"	"							"	D_2			"		"			"
			72	"		18.0 V	18.0 V	GND	"	"							"	D_3			"		"			"
			73	"		18.0 V	18.0 V	18.0 V	GND	"							"	D_4			"		"			"
																			Subgroup 4 T_C = 25°C	Min	Max					
C_i	3012		74	7/						GND							GND	D_1			12.0					pF
			75			7/				"							"	Clock			"					"
			76				7/			"							"	D_2			"					"
			77					7/		"							"	D_3			"					"
			78						7/	"							"	D_4			"					"
																			Subgroup 7 T_C = 25°C	Min	Max	Subgroup 8 T_C = 125°C	Max	Subgroup 8 T_C = -55°C	Max	
Truth table test 8/	3014		79	GND		3/	GND	GND	GND	GND							5.0 V	None	See 9/							
			80	5.0 V		"	5.0 V	5.0 V	5.0 V	"							"	None								
			81	GND		"	GND	GND	GND	"							"	None								
			82	"		"	"	"	"	"	L		L	L		L	"	All outputs								
			83	"		GND	"	"	"	"	"		"	"		"	"									
			84	"		GND	"	"	"	"	"		"	"		"	"									
			85	"		GND	"	"	"	"	"		"	"		"	"									
			86	5.0 V		5.0 V	5.0 V	5.0 V	5.0 V	"	"		"	"		"	"									
			87	"		"	"	"	"	"	"		"	"		"	"									
			88	"		"	"	"	"	"	"		"	"		"	"									
			89	"		"	"	"	"	"	"		"	"		"	"									
			90	"		GND	"	"	"	"	H	L	H	H	L	H	"									
			91	"		5.0 V	"	"	"	"	H	L	H	H	L	H	"									
			92	"		GND	"	"	"	"	L	H	L	L	H	L	"									
			93	"		5.0 V	"	"	"	"	L	H	L	L	H	L	"									
			94	"		GND	"	"	"	"	L	L	L	L	L	L	"									

See footnotes at end of device type 51.

TABLE III. Group A inspection for device type 51 - Continued.

Symbol	MIL-STD-883 method	Cases A C,D,X,Y Symbol	Terminal conditions and limits 1/															Measured terminal	Test limits						Unit
			D_1	NC	Clock	D_2	D_3	D_4	V_{SS}	D_{4+4}	D_{4+5}	D_{3+4}	D_{2+4}	D_{2+5}	D_{1+4}	V_{DD}			Subgroup 9 T_C = 25°C		Subgroup 10 T_C = 125°C		Subgroup 11 T_C = -55°C		
		Test no.	1	2	3	4	5	6	7	8	9	10	11	12	13	14			Min	Max	Min	Max	Min	Max	
t_{PHL}	3003 Fig.6	95			IN			IN	GND	OUT						5.0 V	Clock to D_{4+4}	20	421	30	550	20	421	ns
		96			"			IN	"		OUT					"	Clock to D_{4+5}	"	"	"	"	"	"	"
		97			"		IN		"			OUT				"	Clock to D_{3+4}	"	"	"	"	"	"	"
		98			"	IN			"				OUT			"	Clock to D_{2+4}	"	"	"	"	"	"	"
		99			"	IN			"					OUT		"	Clock to D_{2+5}	"	"	"	"	"	"	"
		100	IN		"				"						OUT	"	Clock to D_{1+4}	"	"	"	"	"	"	"
t_{PLH}		101			"			IN	"	OUT						"	Clock to D_{4+4}	"	"	"	"	"	"	"
		102			"			IN	"		OUT					"	Clock to D_{4+5}	"	"	"	"	"	"	"
		103			"		IN		"			OUT				"	Clock to D_{3+4}	"	"	"	"	"	"	"
		104			"	IN			"				OUT			"	Clock to D_{2+4}	"	"	"	"	"	"	"
		105			"	IN			"					OUT		"	Clock to D_{2+5}	"	"	"	"	"	"	"
		106	IN		"				"						OUT	"	Clock to D_{1+4}	"	"	"	"	"	"	"
t_{THL}	3004 Fig.6	107			"			IN	"	OUT						"	D_{4+4}	13	150	18	200	13	150	"
		108			"			IN	"		OUT					"	D_{4+5}	"	"	"	"	"	"	"
		109			"		IN		"			OUT				"	D_{3+4}	"	"	"	"	"	"	"
		110			"	IN			"				OUT			"	D_{2+4}	"	"	"	"	"	"	"
		111			"	IN			"					OUT		"	D_{2+5}	"	"	"	"	"	"	"
		112	IN		"				"						OUT	"	D_{1+4}	"	"	"	"	"	"	"
t_{TLH}		113			"			IN	"	OUT						"	D_{4+4}	"	"	"	"	"	"	"
		114			"			IN	"		OUT					"	D_{4+5}	"	"	"	"	"	"	"
		115			"		IN		"			OUT				"	D_{3+4}	"	"	"	"	"	"	"
		116			"	IN			"				OUT			"	D_{2+4}	"	"	"	"	"	"	"
		117			"	IN			"					OUT		"	D_{2+5}	"	"	"	"	"	"	"
		118	IN		"				"						OUT	"	D_{1+4}	"	"	"	"	"	"	"
f_{CL} 10/		119			"			IN	"	OUT						"	Clock		.54		.714		.54	µs
		120			"			IN	"		OUT					"	"		"		"		"	"
		121			"		IN		"			OUT				"	"		"		"		"	"
		122			"	IN			"				OUT			"	"		"		"		"	"
		123			"	IN			"					OUT		"	"		"		"		"	"
		124	IN		"				"						OUT	"	"		"		"		"	"

1/ Terminals not designated may be "HIGH" level logic, "LOW" level logic or open except as follows:
$V_{IC(pos)}$ tests; the V_{SS} terminal shall be open.
$V_{IC(neg)}$ tests; the V_{DD} terminal shall be open.
I_{SS} tests; the output terminals shall be open.

2/ The I_{SS} test measurements shall be run in sequence.

3/ Apply single clock pulse; V_{IN} = 0 V to V_{DD}.

4/ Apply clock pulse; V_{IN} = 0 V dc to V_{DD} until proper output state is achieved.

5/ V_{IH} and V_{IL} tests are performed by repeating the truth table test (numbers 79 through 94) using the input and output conditions as follows:

Test	V_{DD}	Input levels		Output levels	
		H	L	H	L
				Min	Max
V_{IL1} V_{IH1}	5.0 V	3.5 V	1.5 V	4.5 V	0.5 V
V_{IL2} V_{IH2}	10.0 V	7.0 V	3.0 V	9.0 V	1.0 V
V_{IL3} V_{IH3}	15.0 V	11.0 V	4.0 V	13.5 V	1.5 V

6/ The device manufacturer may, at his option, measure I_{IL} and I_{IH} at 25°C for each individual input or measure all inputs together.

7/ See 4.4.1c.

8/ The truth table test shall be performed in sequence.

9/ The truth table tests shall be performed at V_{IH} and V_{DD} $\leq$5 V dc and $\geq$18 V dc.
L = V_{SS} +0.5 V maximum, and H = V_{DD} - 0.50 V dc minimum.

10/ The maximum clock frequency (f_{CL}) requirement is considered met if proper output state changes occur with the pulse repetition period set to that given in the limits column.

11/ The device manufacturer may perform V_{IL}/V_{IH} tests as functional tests.

TABLE III. Group A inspection for device type 52.

Symbol	MIL-STD-883 method	Cases E,F,Z	Terminal conditions and limits 1/																Measured terminal	Test limits						Unit
			P_{I8}	Q_6	Q_8	P_{I4}	P_{I3}	P_{I2}	P_{I1}	V_{SS}	P/S control	Clock	Serial In	Q_7	P_{I5}	P_{I6}	P_{I7}	V_{DD}		Subgroup 1 T_C=25°C		Subgroup 2 T_C=125°C		Subgroup 3 T_C=-55°C		
		Test no.	1	2	3	4	5	6	7	8	9	10	11	12	13	14	15	16		Min	Max	Min	Max	Min	Max	
V_{IC} (pos)		1	1 mA															GND	P_{I8}		1.5					V
		2				1 mA												"	P_{I4}		"					"
		3					1 mA											"	P_{I3}		"					"
		4						1 mA										"	P_{I2}		"					"
		5							1 mA									"	P_{I1}		"					"
		6									1 mA							"	P/S control		"					"
		7										1 mA						"	Clock		"					"
		8											1 mA					"	Serial In		"					"
		9													1 mA			"	P_{I5}		"					"
		10														1 mA		"	P_{I6}		"					"
		11															1 mA	"	P_{I7}		"					"
V_{IC} (neg)		12	-1 mA							GND									P_{I8}		-6					"
		13				-1 mA				"									P_{I4}		"					"
		14					-1 mA			"									P_{I3}		"					"
		15						-1 mA		"									P_{I2}		"					"
		16							-1 mA	"									P_{I1}		"					"
		17								"	-1 mA								P/S control		"					"
		18								"		-1 mA							Clock		"					"
		19								"			-1 mA						Serial In		"					"
		20								"					-1 mA				P_{I5}		"					"
		21								"						-1 mA			P_{I6}		"					"
		22								"							-1 mA		P_{I7}		"					"
I_{SS} 2/	3005	23	GND			GND	18.0 V	GND	18.0 V	"	18.0 V	18.0 V	GND		18.0 V	GND	18.0 V	18.0 V	None		-0.5		-5.0			μA
		24	GND			GND	18.0 V	GND	18.0 V	"	"	GND	GND		18.0 V	GND	18.0 V	"	"		"		"			"
		25	GND			GND	18.0 V	GND	18.0 V	"	"	18.0 V	GND		18.0 V	GND	18.0 V	"	"		"		"			"
		26	18.0 V			18.0 V	GND	18.0 V	GND	"	"	18.0 V	18.0 V		GND	18.0 V	GND	"	"		"		"			"
		27	"			"	"	"	"	"	"	GND	"		"	"	"	"	V_{SS}		"		"			"
		28	"			"	"	"	"	"	"	18.0 V	"		"	"	"	"	None		"		"			"
		29	"			"	"	"	"	"	GND	18.0 V	"		"	"	"	"	V_{SS}		"		"			"
		30	"			"	"	"	"	"	"	GND	"		"	"	"	"	None		"		"			"
		31	"			"	"	"	"	"	"	18.0 V	"		"	"	"	"	None		"		"			"
		32	GND			GND	18.0 V	GND	18.0 V	"	"	18.0 V	GND		18.0 V	GND	18.0 V	"	V_{SS}		"		"			"
V_{OH3}	3006	33	15.0 V			15.0 V	15.0 V	15.0 V	15.0 V	"	15.0 V	3/	15.0 V		15.0 V	15.0 V	15.0 V	15.0 V	Q_6	14.95		14.95		14.95		V
		34	15.0 V			15.0 V	15.0 V	15.0 V	15.0 V	"	"	3/	15.0 V		15.0 V	15.0 V	15.0 V	"	Q_7	14.95		14.95		14.95		"
		35	15.0 V			15.0 V	15.0 V	15.0 V	15.0 V	"	"	3/	15.0 V		15.0 V	15.0 V	15.0 V	"	Q_8	14.95		14.95		14.95		"
V_{OL3}	3007	36	GND			GND	GND	GND	GND	"	"	GND	GND		GND	GND	GND	"	Q_6		0.05		0.05		0.05	"
		37	GND			GND	GND	GND	GND	"	"	GND	GND		GND	GND	GND	"	Q_7		0.05		0.05		0.05	"
		38	GND			GND	GND	GND	GND	"	"	GND	GND		GND	GND	GND	"	Q_8		0.05		0.05		0.05	"
V_{IH1} 2/		39	4/	4/	4/	4/	4/	4/	4/	"	4/	4/	4/	4/	4/	4/	4/	4/	All outputs	4/	4/	4/	4/	4/	4/	
V_{IH2} 2/		40	"	"	"	"	"	"	"	"	"	"	"	"	"	"	"	"	"	"	"	"	"	"	"	
V_{IH3} 2/		41	"	"	"	"	"	"	"	"	"	"	"	"	"	"	"	"	"	"	"	"	"	"	"	
V_{IL1} 2/		42	"	"	"	"	"	"	"	"	"	"	"	"	"	"	"	"	"	"	"	"	"	"	"	
V_{IL2} 2/		43	"	"	"	"	"	"	"	"	"	"	"	"	"	"	"	"	"	"	"	"	"	"	"	
V_{IL3} 2/		44	"	"	"	"	"	"	"	"	"	"	"	"	"	"	"	"	"	"	"	"	"	"	"	
I_{OL1}		45	GND	0.4 V		GND	GND	GND	GND	"	5.0 V	3/	GND		GND	GND	GND	5.0 V	Q_6	0.51		0.36		0.64		mA
		46	"			"	"	"	"	"	5.0 V	"	"	0.4 V	"	"	"	5.0 V	Q_7	0.51		0.36		0.64		"
		47	"		0.4 V	"	"	"	"	"	5.0 V	"	"		"	"	"	5.0 V	Q_8	0.51		0.36		0.64		"
I_{OL2}		48	"	1.5 V		"	"	"	"	"	15.0 V	"	"		"	"	"	15.0 V	Q_6	3.4		2.4		4.2		"
		49	"			"	"	"	"	"	15.0 V	"	"	1.5 V	"	"	"	15.0 V	Q_7	3.4		2.4		4.2		"
		50	"		1.5 V	"	"	"	"	"	15.0 V	"	"		"	"	"	15.0 V	Q_8	3.4		2.4		4.2		"

See footnotes at end of device type 52.

TABLE III. Group A inspection for device type 52 - Continued.

Symbol	MIL-STD-883 method	Cases E,F,Z Test no.	Terminal conditions and limits 1/: P_{I8} 1	Q_6 2	Q_8 3	P_{I4} 4	P_{I3} 5	P_{I2} 6	P_{I1} 7	V_{SS} 8	P/S control 9	Clock 10	Serial In 11	Q_7 12	P_{I5} 13	P_{I6} 14	P_{I7} 15	V_{DD} 16	Measured terminal	Test limits: Subgroup 1 T_C=25°C Min	Subgroup 1 Max	Subgroup 2 T_C=125°C Min	Subgroup 2 Max	Subgroup 3 T_C=-55°C Min	Subgroup 3 Max	Unit
I_{OH1}		51	5.0 V	4.6 V		5.0 V	5.0 V	5.0 V	5.0 V	GND	5.0 V	3/	5.0 V		5.0 V	5.0 V	5.0 V	5.0 V	Q_6	-0.51		-0.36		-0.64		mA
		52	5.0 V			5.0 V	5.0 V	5.0 V	5.0 V	"	5.0 V	"	5.0 V	4.6 V	5.0 V	5.0 V	5.0 V	5.0 V	Q_7	-0.51		-0.36		-0.64		"
		53	5.0 V		4.6 V	5.0 V	5.0 V	5.0 V	5.0 V	"	5.0 V	"	5.0 V		5.0 V	5.0 V	5.0 V	5.0 V	Q_8	-0.51		-0.35		-0.64		"
I_{OH2}		54	15.0 V	13.5 V		15.0 V	15.0 V	15.0 V	15.0 V	"	15.0 V	"	15.0 V		15.0 V	15.0 V	15.0 V	15.0 V	Q_6	-3.4		-2.4		-4.2		"
		55	15.0 V			15.0 V	15.0 V	15.0 V	15.0 V	"	15.0 V	"	15.0 V	13.5 V	15.0 V	15.0 V	15.0 V	15.0 V	Q_7	-3.4		-2.4		-4.2		"
		56	15.0 V		13.5 V	15.0 V	15.0 V	15.0 V	15.0 V	"	15.0 V	"	15.0 V		15.0 V	15.0 V	15.0 V	15.0 V	Q_8	-3.4		-2.4		-4.2		"
I_{IH1} 5/	3010	57	18.0 V			18.0 V	18.0 V	18.0 V	18.0 V	"	18.0 V	18.0 V 6/	18.0 V		18.0 V	18.0 V	18.0 V	18.0 V	All inputs together		11					nA
I_{IH2}		58	18.0 V			GND	GND	GND	GND	"	GND	GND	GND		GND	GND	GND	"	P_{I8}		1		45			"
		59	GND			18.0 V	GND	GND	"	"	"	"	"		"	"	"	"	P_{I4}		"		"			"
		60	"			GND	18.0 V	GND	"	"	"	"	"		"	"	"	"	P_{I3}		"		"			"
		61	"			"	GND	18.0 V	"	"	"	"	"		"	"	"	"	P_{I2}		"		"			"
		62	"			"	"	GND	18.0 V	"	"	"	"		"	"	"	"	P_{I1}		"		"			"
		63	"			"	"	"	GND	"	18.0 V	"	"		"	"	"	"	P/S control		"		"			"
		64	"			"	"	"	"	"	GND	18.0 V	"		"	"	"	"	Clock		"		"			"
		65	"			"	"	"	"	"	"	GND	18.0 V		"	"	"	"	Serial In		"		"			"
		66	"			"	"	"	"	"	"	"	GND		18.0 V	"	"	"	P_{I5}		"		"			"
		67	"			"	"	"	"	"	"	"	"		GND	18.0 V	"	"	P_{I6}		"		"			"
		68	"			"	"	"	"	"	"	"	"		"	GND	18.0 V	"	P_{I7}		"		"			"
I_{IL1} 5/	3009	69	"			"	"	"	"	"	"	"	"		"	"	GND	"	All inputs together		-11					"
I_{IL2}		70	"			"	"	"	"	"	"	"	"		"	"	"	"	P_{I8}		-1		-45			"
		71	"			"	"	"	"	"	"	"	"		"	"	"	"	P_{I4}		"		"			"
		72	"			"	"	"	"	"	"	"	"		"	"	"	"	P_{I3}		"		"			"
		73	"			"	"	"	"	"	"	"	"		"	"	"	"	P_{I2}		"		"			"
		74	"			"	"	"	"	"	"	"	"		"	"	"	"	P_{I1}		"		"			"
		75	"			"	"	"	"	"	"	"	"		"	"	"	"	P/S control		"		"			"
		76	"			"	"	"	"	"	"	"	"		"	"	"	"	Clock		"		"			"
		77	"			"	"	"	"	"	"	"	"		"	"	"	"	Serial In		"		"			"
		78	"			"	"	"	"	"	"	"	"		"	"	"	"	P_{I5}		"		"			"
		79	"			"	"	"	"	"	"	"	"		"	"	"	"	P_{I6}		"		"			"
		80	"			"	"	"	"	"	"	"	"		"	"	"	"	P_{I7}		"		"			"
																				Subgroup 4 T_C=25°C Min	Max					
C_{IN}	3012	81	7/							GND								GND	P_{I8}		12					pF
		82				7/				"								"	P_{I4}		"					"
		83					7/			"								"	P_{I3}		"					"
		84						7/		"								"	P_{I2}		"					"
		85							7/	"								"	P_{I1}		"					"
		86								"	7/							"	P/S control		"					"
		87								"		7/						"	Clock		"					"
		88								"			7/					"	Serial In		"					"
		89								"					7/			"	P_{I5}		"					"
		90								"						7/		"	P_{I6}		"					"
		91								"							7/	"	P_{I7}		"					"

See footnotes at end of device type 52.

TABLE III. Group A inspection for device type 52 - Continued.

Symbol	MIL-STD-883 method	Cases E,F,Z Test no.	Terminal conditions and limits 1/																Measured terminal	Test limits: Subgroup 7 T_C=25°C		Subgroup 8 T_C=125°C		Subgroup 8 T_C=-55°C		Unit
			P_{I8} 1	Q_6 2	Q_8 3	P_{I4} 4	P_{I3} 5	P_{I2} 6	P_{I1} 7	V_{SS} 8	P/S control 9	Clock 10	Serial In 11	Q_7 12	P_{I5} 13	P_{I6} 14	P_{I7} 15	V_{DD} 16		Min	Max	Min	Max	Min	Max	
Truth table test	3014 8/	92	5.0 V			5.0 V	5.0 V	5.0 V	5.0 V	GND	5.0 V	5.0 V	GND		5.0 V	5.0 V	5.0 V	5.0 V	None	See 9/,10/						
		93	5.0 V			5.0 V	5.0 V	5.0 V	5.0 V	"	5.0 V	GND	"		5.0 V	5.0 V	5.0 V	"	None							
		94	5.0 V	H	H	5.0 V	5.0 V	5.0 V	5.0 V	"	5.0 V	5.0 V	"	H	5.0 V	5.0 V	5.0 V	"	All							
		95	GND	"	"	GND	GND	GND	GND	"	GND	5.0 V	"	"	GND	GND	GND	"	outputs							
		96	"	"	"	"	"	"	"	"	"	GND	"	"	"	"	"	"	"							
		97	"	"	"	"	"	"	"	"	"	5.0 V	"	"	"	"	"	"	"							
		98	"	"	"	"	"	"	"	"	"	5.0 V	5.0 V	"	"	"	"	"	"							
		99	"	"	"	"	"	"	"	"	"	GND	"	"	"	"	"	"	"							
		100	"	"	"	"	"	"	"	"	"	5.0 V	"	"	"	"	"	"	"							
		101	"	"	"	"	"	"	"	"	"	GND	"	"	"	"	"	"	"							
		102	"	"	"	"	"	"	"	"	"	5.0 V	"	"	"	"	"	"	"							
		103	"	"	"	"	"	"	"	"	"	GND	"	"	"	"	"	"	"							
		104	"	"	"	"	"	"	"	"	"	5.0 V	"	"	"	"	"	"	"							
		105	"	"	"	"	"	"	"	"	"	GND	"	"	"	"	"	"	"							
		106	"	"	"	"	"	"	"	"	"	5.0 V	"	"	"	"	"	"	"							
		107	"	"	"	"	"	"	"	"	"	GND	"	"	"	"	"	"	"							
		108	"	L	"	"	"	"	"	"	"	5.0 V	"	"	"	"	"	"	"							
		109	"	L	"	"	"	"	"	"	"	GND	"	"	"	"	"	"	"							
		110	"	H	"	"	"	"	"	"	"	5.0 V	"	L	"	"	"	"	"							
		111	"	"	"	"	"	"	"	"	"	GND	"	L	"	"	"	"	"							
		112	"	"	L	"	"	"	"	"	"	5.0 V	"	H	"	"	"	"	"							
		113	"	"	L	"	"	"	"	"	"	GND	"	"	"	"	"	"	"							
		114	"	"	H	"	"	"	"	"	"	5.0 V	"	"	"	"	"	"	"							
		115	"	"	H	"	"	"	"	"	5.0 V	5.0 V	GND	"	"	"	"	"	"							
		116	"	"	H	"	"	"	"	"	5.0 V	GND	"	"	"	"	"	"	"							
		117	"	L	L	"	"	"	"	"	5.0 V	5.0 V	"	L	"	"	"	"	"							
		118	5.0 V	"	"	5.0 V	5.0 V	5.0 V	5.0 V	"	GND	GND	"	"	5.0 V	5.0 V	5.0 V	"	"							
		119	"	"	"	"	"	"	"	"	"	5.0 V	"	"	"	"	"	"	"							
		120	"	"	"	"	"	"	"	"	"	GND	"	"	"	"	"	"	"							
		121	"	"	"	"	"	"	"	"	"	5.0 V	"	"	"	"	"	"	"							
		122	"	"	"	"	"	"	"	"	"	GND	"	"	"	"	"	"	"							
		123	"	"	"	"	"	"	"	"	"	5.0 V	"	"	"	"	"	"	"							
		124	"	"	"	"	"	"	"	"	"	GND	"	"	"	"	"	"	"							
		125	"	"	"	"	"	"	"	"	"	5.0 V	"	"	"	"	"	"	"							
		126	"	"	"	"	"	"	"	"	"	GND	"	"	"	"	"	"	"							
		127	"	"	"	"	"	"	"	"	"	5.0 V	"	"	"	"	"	"	"							
		128	"	"	"	"	"	"	"	"	5.0 V	GND	5.0 V	"	"	"	"	"	"							
		129	"	H	H	"	"	"	"	"	5.0 V	5.0 V	5.0 V	H	"	"	"	"	"							
		130	GND	"	"	GND	GND	GND	GND	"	GND	GND	GND	"	GND	GND	GND	"	"							
		131	"	"	"	"	"	"	"	"	"	5.0 V	"	"	"	"	"	"	"							
		132	"	"	"	"	"	"	"	"	"	GND	"	"	"	"	"	"	"							
		133	"	"	"	"	"	"	"	"	"	5.0 V	"	"	"	"	"	"	"							
		134	"	"	"	"	"	"	"	"	"	GND	"	"	"	"	"	"	"							
		135	"	"	"	"	"	"	"	"	"	5.0 V	"	"	"	"	"	"	"							
		136	"	"	"	"	"	"	"	"	"	GND	"	"	"	"	"	"	"							
		137	"	"	"	"	"	"	"	"	"	5.0 V	"	"	"	"	"	"	"							
		138	"	"	"	"	"	"	"	"	"	GND	"	"	"	"	"	"	"							
		139	"	"	"	"	"	"	"	"	"	5.0 V	"	"	"	"	"	"	"							
																				Subgroup 9 T_C=25°C		Subgroup 10 T_C=125°C		Subgroup 11 T_C=-55°C		
																				Min	Max	Min	Max	Min	Max	
t_{PHL1}	3003 Fig. 9	140	IN	OUT		IN	IN	IN	IN	GND	GND	IN	IN		IN	IN	IN	5.0 V	Clock to Q_6	13	338	18	540	13	338	ns
		141	IN			IN	IN	IN	IN	GND	GND	IN	IN	OUT	IN	IN	IN	5.0 V	Clock to Q_7	"	"	"	"	"	"	ns
		142	IN		OUT	IN	IN	IN	IN	GND	GND	IN	IN		IN	IN	IN	5.0 V	Clock to Q_8	"	"	"	"	"	"	ns

See footnotes at end of device type 52.

TABLE III. Group A inspection for device type 52 - Continued.

Symbol	MIL-STD-883 method	Cases E,F,Z	Terminal conditions and limits 1/																	Measured terminal	Test limits Subgroup 9 T_C=25°C		Subgroup 10 T_C=125°C		Subgroup 11 T_C=-55°C		Unit
		Test no.	P_{I8} 1	Q_6 2	Q_8 3	P_{I4} 4	P_{I3} 5	P_{I2} 6	P_{I1} 7	V_{SS} 8	P/S control 9	Clock 10	Serial In 11	Q_7 12	P_{I5} 13	P_{I6} 14	P_{I7} 15	V_{DD} 16		Min	Max	Min	Max	Min	Max	
t_{PLH1}	3003 Fig. 9	143	IN	OUT		IN	IN	IN	IN	GND	GND	IN	IN		IN	IN	IN	5.0 V	Clock to Q_6	13	338	18	450	13	338	ns
		144	"			"	"	"	"	"	GND	"	"	OUT	"	"	"	"	Clock to Q_7	"	"	"	"	"	"	"
		145	"		OUT	"	"	"	"	"	GND	"	"		"	"	"	"	Clock to Q_8	"	"	"	"	"	"	"
t_{PHL2}		146	"	OUT		"	"	"	"	"	5.0 V	"	"		"	"	"	"	Clock to Q_6	"	"	"	"	"	"	"
		147	"			"	"	"	"	"	"	"	"	OUT	"	"	"	"	Clock to Q_7	"	"	"	"	"	"	"
		148	"		OUT	"	"	"	"	"	"	"	"		"	"	"	"	Clock to Q_8	"	"	"	"	"	"	"
t_{PLH2}		149	"	OUT		"	"	"	"	"	"	"	"		"	"	"	"	Clock to Q_6	"	"	"	"	"	"	"
		150	"			"	"	"	"	"	"	"	"	OUT	"	"	"	"	Clock to Q_7	"	"	"	"	"	"	"
		151	"		OUT	"	"	"	"	"	"	"	"		"	"	"	"	Clock to Q_8	"	"	"	"	"	"	"
t_{THL}	3004 Fig. 9	152	"	OUT		"	"	"	"	"	"	"	"		"	"	"	"	Q_5	10	210	14	280	10	210	"
		153	"		OUT	"	"	"	"	"	"	"	"	OUT	"	"	"	"	Q_7	"	"	"	"	"	"	"
		154	"			"	"	"	"	"	"	"	"		"	"	"	"	Q_3	"	"	"	"	"	"	"
t_{TLH}		155	"	OUT		"	"	"	"	"	"	"	"		"	"	"	"	Q_5	"	"	"	"	"	"	"
		156	"		OUT	"	"	"	"	"	"	"	"	OUT	"	"	"	"	Q_7	"	"	"	"	"	"	"
		157	"			"	"	"	"	"	"	"	"		"	"	"	"	Q_3	"	"	"	"	"	"	"
f_{CL} (max)		158		OUT							GND	"	"					"	Clock		625		1.933		.625	μs
		159									GND	"	"	OUT				"	Clock		"		"		"	μs
		160 11/			OUT						GND	"	"					"	Clock		"		"		"	μs

1/ Terminals not designated may be "HIGH" level logic, "LOW" level logic or open except as follows: $V_{IC(pos)}$ tests; the V_{SS} terminal shall be open. $V_{IC(neg)}$ tests; the V_{DD} terminal shall be open. I_{SS} test, the output terminal shall be open.

2/ I_{SS} tests; the output terminals shall be performed in sequence.

3/ Apply a single clock pulse; V_{IN} = 0 V dc to V_{DD}.

4/ V_{IH} and V_{IL} tests are performed by repeating the truth table tests (numbers 92 through 139) using the input and output conditions as follows:

Test	V_{DD}	Input H	Input L	Output H	Output L
V_{IH1} V_{IL1}	5.0 V	3.5 V	1.5 V	4.5 V min	0.5 V max
V_{IH2} V_{IL2}	10.0 V	7.0 V	3.0 V	9.0 V min	1.0 V max
V_{IH3} V_{IL3}	15.0 V	11.0 V	4.0 V	13.5 V min	1.5 V max

5/ The device manufacturer may, at his option, measure I_{IL} and I_{IH} at 25°C for each individual input or measure all inputs together.

6/ Apply six (6) clock pulses, V_{IN} = 0 V dc to V_{DD}.

7/ See 4.4.1c.

8/ Truth table test shall be run in sequence.

9/ The output voltage limits for each temperature are "H" = V_{DD} -0.5 V min and "L" = V_{SS} +0.5 V min.

10/ The truth table test shall be performed at V_{IH} and V_{DD} ≤5.0 V dc and ≥18.0 Vdc.

11/ The maximum clock frequency (f_{CL}) requirement is considered met if proper output state changes occur with the pulse repetition period set to that given in the limits column.

12/ The device manufacturer may perform V_{IL}/V_{IH} tests as functional tests.

TABLE III. Group A inspection for device type 53.

Symbol	MIL-STD-883 method	Cases E,F,2 Test no.	Terminal conditions and limits 1/ Clock B 1	Q_{4B} 2	Q_{3A} 3	Q_{2A} 4	Q_{1A} 5	Reset A 6	Data A 7	V_{SS} 8	Clock A 9	Q_{4A} 10	Q_{3B} 11	Q_{2B} 12	Q_{1B} 13	Reset B 14	Data B 15	V_{DD} 16	Measured terminal	Test limits Subgroup 1 T_C=25°C Min	Subgroup 1 Max	Subgroup 2 T_C=125°C Min	Subgroup 2 Max	Subgroup 3 T_C=-55°C Min	Subgroup 3 Max	Unit
V_{IC} (pos)		1									1 mA							GND	Clock A		1.5					V
		2							1 mA									"	Data A		"					"
		3						1 mA										"	Reset A		"					"
		4	1 mA															"	Clock B		"					"
		5															1 mA	"	Data B		"					"
		6														1 mA		"	Reset B		"					"
V_{IC} (neg)		7								GND	-1 mA								Clock A		-6					"
		8							-1 mA	"									Data A		"					"
		9						-1 mA		"									Reset A		"					"
		10	-1 mA							"									Clock B		"					"
		11								"							-1 mA		Data B		"					"
		12								"						-1 mA			Reset B		"					"
I_{SS} 2/	3005	13	GND					18.0 V	18.0 V	"	GND					18.0 V	18.0 V	18.0 V	V_{SS}		-0.5		-5.0			μA
		14	18.0 V					18.0 V	"	"	18.0 V					18.0 V	"	"	None		"		"			"
		15	18.0 V					GND	"	"	18.0 V					GND	"	"	"		"		"			"
		16	GND					"	"	"	GND					"	"	"	"		"		"			"
		17	18.0 V					"	"	"	18.0 V					"	"	"	"		"		"			"
		18	18.0 V					"	GND	"	18.0 V					"	GND	"	"		"		"			"
		19	GND					"	GND	"	GND					"	GND	"	"		"		"			"
		20	18.0 V					"	GND	"	18.0 V					"	GND	"	"		"		"			"
		21	18.0 V					"	18.0 V	"	18.0 V					"	18.0 V	"	"		"		"			"
		22	GND					"	18.0 V	"	GND					"	18.0 V	"	"		"		"			"
		23	18.0 V					"	18.0 V	"	18.0 V					"	18.0 V	"	"		"		"			"
		24	18.0 V					"	GND	"	18.0 V					"	GND	"	V_{SS}		"		"			"
		25	GND					"	GND	"	GND					"	GND	"	V_{SS}		"		"			"
		26	18.0 V					"	GND	"	18.0 V					"	GND	"	None		"		"			"
		27	18.0 V					"	18.0 V	"	18.0 V					"	18.0 V	"	V_{SS}		"		"			"
V_{OH3}	3006	28	GND					"	15.0 V	"	3/					"	GND	15.0 V	Q_{1A}	14.95		14.95		14.95		V
		29	"					"	"	"	"					"	"	"	Q_{2A}	"		"		"		"
		30	"					"	"	"	"					"	"	"	Q_{3A}	"		"		"		"
		31	"					"	"	"	"					"	"	"	Q_{4A}	"		"		"		"
		32	3/					"	GND	"	GND					"	15.0 V	"	Q_{1B}	"		"		"		"
		33	"					"	"	"	"					"	"	"	Q_{2B}	"		"		"		"
		34	"					"	"	"	"					"	"	"	Q_{3B}	"		"		"		"
		35	"					"	"	"	"					"	"	"	Q_{4B}	"		"		"		"
V_{OL3}	3007	36	GND					"	"	"	3/					"	GND	"	Q_{1A}		0.05		0.05		0.05	"
		37	"					"	"	"	"					"	"	"	Q_{2A}		"		"		"	"
		38	"					"	"	"	"					"	"	"	Q_{3A}		"		"		"	"
		39	"					"	"	"	"					"	"	"	Q_{4A}		"		"		"	"
		40	3/					"	"	"	GND					"	"	"	Q_{1B}		"		"		"	"
		41	"					"	"	"	"					"	"	"	Q_{2B}		"		"		"	"
		42	"					"	"	"	"					"	"	"	Q_{3B}		"		"		"	"
		43	"					"	"	"	"					"	"	"	Q_{4B}		"		"		"	"
V_{IH1}		44	4/	4/	4/	4/	4/	4/	4/		4/	4/	4/	4/	4/	4/	4/	4/	All outputs	4/	4/	4/	4/	4/	4/	
V_{IH2}		45	"	"	"	"	"	"	"	"	"	"	"	"	"	"	"	"	"	"	"	"	"	"	"	
V_{IH3}		46	"	"	"	"	"	"	"	"	"	"	"	"	"	"	"	"	"	"	"	"	"	"	"	
V_{IL1}		47	"	"	"	"	"	"	"	"	"	"	"	"	"	"	"	"	"	"	"	"	"	"	"	
V_{IL2}		48	"	"	"	"	"	"	"	"	"	"	"	"	"	"	"	"	"	"	"	"	"	"	"	
V_{IL3}		49	"	"	"	"	"	"	"	"	"	"	"	"	"	"	"	"	"	"	"	"	"	"	"	

See footnotes at end of device type 53.

TABLE III. Group A inspection for device type 53 - Continued.

Symbol	MIL-STD-883 method	Cases E,F,Z Test no.	Terminal conditions and limits 1/: Clock B 1	Q_{4B} 2	Q_{3A} 3	Q_{2A} 4	Q_{1A} 5	Reset A 6	Data A 7	V_{SS} 8	Clock A 9	Q_{4A} 10	Q_{3B} 11	Q_{2B} 12	Q_{1B} 13	Reset B 14	Data B 15	V_{DD} 16	Measured terminal	Test limits: Subgroup 1 T_C=25°C Min	Subgroup 1 T_C=25°C Max	Subgroup 2 T_C=125°C Min	Subgroup 2 T_C=125°C Max	Subgroup 3 T_C=-55°C Min	Subgroup 3 T_C=-55°C Max	Unit
I_{OL1}		50	GND				0.4 V	GND	GND	GND	3/					GND	GND	15.0 V	Q_{1A}	0.5		0.36		0.54		nA
		51	"			0.4 V		"	"	"	"					"	"	"	Q_{2A}	"		"		"		"
		52	"		0.4 V			"	"	"	"					"	"	"	Q_{3A}	"		"		"		"
		53	"					"	"	"	"	0.4 V				"	"	"	Q_{4A}	"		"		"		"
		54	3/					"	"	"	GND				0.4 V	"	"	"	Q_{1B}	"		"		"		"
		55	"					"	"	"	"			0.4 V		"	"	"	Q_{2B}	"		"		"		"
		56	"					"	"	"	"		0.4 V			"	"	"	Q_{3B}	"		"		"		"
		57	"	0.4 V				"	"	"	"					"	"	"	Q_{4B}	"		"		"		"
I_{OL2}		58	GND				1.5 V	"	"	"	3/					"	"	15.0 V	Q_{1A}	3.4		2.4		4.2		"
		59	"			1.5 V		"	"	"	"					"	"	"	Q_{2A}	"		"		"		"
		60	"		1.5 V			"	"	"	"					"	"	"	Q_{3A}	"		"		"		"
		61	"					"	"	"	"	1.5 V				"	"	"	Q_{4A}	"		"		"		"
		62	3/					"	"	"	GND				1.5 V	"	"	"	Q_{1B}	"		"		"		"
		63	"					"	"	"	"			1.5 V		"	"	"	Q_{2B}	"		"		"		"
		64	"					"	"	"	"		1.5 V			"	"	"	Q_{3B}	"		"		"		"
		65	"	1.5 V				"	"	"	"					"	"	"	Q_{4B}	"		"		"		"
I_{OH1}		66	GND			4.6 V	4.6 V	"	5.0 V	"	3/					"	"	5.0 V	Q_{1A}	-0.41		-0.36		-0.64		"
		67	"		4.6 V			"	"	"	"					"	"	"	Q_{2A}	"		"		"		"
		68	"					"	"	"	"					"	"	"	Q_{3A}	"		"		"		"
		69	"					"	"	"	"	4.6 V				"	"	"	Q_{4A}	"		"		"		"
		70	3/					"	GND	"	GND				4.6 V	"	5.0 V	"	Q_{1B}	"		"		"		"
		71	"					"	"	"	"			4.6 V		"	"	"	Q_{2B}	"		"		"		"
		72	"					"	"	"	"		4.6 V			"	"	"	Q_{3B}	"		"		"		"
		73	"	4.6 V				"	"	"	"					"	"	"	Q_{4B}	"		"		"		"
I_{OH2}		74	GND			13.5 V	13.5 V	"	15.0 V	"	3/					"	GND	15.0 V	Q_{1A}	-3.4		-2.4		-4.2		"
		75	"		13.5 V			"	"	"	"					"	"	"	Q_{2A}	"		"		"		"
		76	"					"	"	"	"					"	"	"	Q_{3A}	"		"		"		"
		77	"					"	"	"	"	13.5 V				"	"	"	Q_{4A}	"		"		"		"
		78	3/					"	GND	"	GND				13.5 V	"	15.0 V	"	Q_{1B}	"		"		"		"
		79	"					"	"	"	"			13.5 V		"	"	"	Q_{2B}	"		"		"		"
		80	"					"	"	"	"		13.5 V			"	"	"	Q_{3B}	"		"		"		"
		81	"	13.5 V				"	"	"	"					"	"	"	Q_{4B}	"		"		"		"
I_{IH} 4/	2009	82	18.0 V					18.0 V	18.0 V	"	18.0 V					18.0 V	18.0 V	18.0 V	All inputs together		6.0					nA
		83	GND					GND	GND	"	18.0 V					GND	GND	"	Clock A		1.0		45			"
		84	GND					GND	18.0 V	"	GND					"	"	"	Data A		"		"			"
		85	GND					18.0 V	GND	"	"					"	"	"	Reset A		"		"			"
		86	18.0 V					GND	"	"	"					"	"	"	Clock B		"		"			"
		87	GND					"	"	"	"					"	18.0 V	"	Data B		"		"			"
		88	"					"	"	"	"					18.0 V	GND	"	Reset B		"		"			"
I_{IL} 4/	2009	89	"					"	"	"	"					GND	"	"	All inputs together		-6.0					"
		90	"					"	"	"	"					"	"	"	Clock A		-1.0		-45			"
		91	"					"	"	"	"					"	"	"	Data A		"		"			"
		92	"					"	"	"	"					"	"	"	Reset A		"		"			"
		93	"					"	"	"	"					"	"	"	Clock B		"		"			"
		94	"					"	"	"	"					"	"	"	Data B		"		"			"
		95	"					"	"	"	"					"	"	"	Reset B		"		"			"
																				Subgroup 4 T_C=25°C Min	Subgroup 4 T_C=25°C Max					
[illegible]	2012	96							6/	GND	6/							GND	Clock A		12					pF
		97								"								"	Data A		"					"
		98	6/					6/		"								"	Reset A		"					"
		100								"							6/	"	Clock B		"					"
		101								"						6/		"	Data B		"					"
																			Reset B		"					"

See footnotes at end of device type 53.

TABLE III. Group A inspection for device type 53 - Continued.

Symbol	MIL-STD-883 method	Cases E,F,Z Test no.	Terminal conditions and limits 1/ Clock B 1	Q_{4B} 2	Q_{3A} 3	Q_{2A} 4	Q_{1A} 5	Reset A 6	Data A 7	V_{SS} 8	Clock A 9	Q_{4A} 10	Q_{3B} 11	Q_{2B} 12	Q_{1B} 13	Reset B 14	Data B 15	V_{DD} 16	Measured terminal	Test limits Subgroup 7 T_C=25°C Min	Subgroup 7 Max	Subgroup 8 T_C=125°C Min	Subgroup 8 Max	Subgroup 8 T_C=-55°C Min	Subgroup 8 Max	Unit
Truth table test 7/	3014	102	5.0 V	L	L	L	L	5.0 V	5.0 V	GND	5.0 V	L	L	L	L	5.0 V	5.0 V	5.0 V	All outputs							
		103	5.0 V	"	"	"	L	GND	"	"	5.0 V	"	"	"	L	GND	"	"								
		104	GND	"	"	"	L	"	"	"	GND	"	"	"	L	"	"	"								
		105	5.0 V	"	"	"	H	"	"	"	5.0 V	"	"	"	H	"	"	"								
		106	5.0 V	"	"	"	H	"	GND	"	5.0 V	"	"	"	H	"	GND	"								
		107	GND	"	"	"	H	"	GND	"	GND	"	"	"	H	"	GND	"								
		108	5.0 V	"	"	H	L	"	GND	"	5.0 V	"	"	H	L	"	GND	"								
		109	5.0 V	"	"	H	L	"	5.0 V	"	5.0 V	"	"	H	L	"	5.0 V	"								
		110	GND	"	"	H	L	"	"	"	GND	"	"	H	L	"	"	"								
		111	5.0 V	"	H	L	H	"	"	"	5.0 V	"	H	L	H	"	"	"								
		112	GND	"	H	L	"	"	"	"	GND	"	H	L	"	"	"	"								
		113	5.0 V	H	L	H	"	"	"	"	5.0 V	H	L	H	"	"	"	"								
		114	GND	H	L	"	"	"	"	"	GND	H	L	"	"	"	"	"								
		115	5.0 V	L	H	"	"	"	"	"	5.0 V	L	H	"	"	"	"	"								
		116	GND	L	H	"	"	"	"	"	GND	L	"	"	"	"	"	"								
		117	5.0 V	H	H	"	"	"	"	"	5.0 V	H	"	"	"	"	"	"								
		118	GND	H	H	"	"	"	"	"	GND	H	"	"	"	"	"	"								
		119	GND	L	L	L	L	5.0 V	"	"	GND	L	L	L	L	5.0 V	"	"								
		120	5.0 V	L	L	L	L	5.0 V	"	"	5.0 V	L	L	L	L	5.0 V	"	"								
																				Subgroup 9 T_C=25°C Min	Subgroup 9 Max	Subgroup 10 T_C=125°C Min	Subgroup 10 Max	Subgroup 11 T_C=-55°C Min	Subgroup 11 Max	
t_{PHL1}	3003 Fig.8	121	IN				OUT	GND	IN	GND	IN					GND	IN	5.0 V	Clock A to Q_{1A}	20	421	30	560	20	421	ns
		122	"			OUT		"	"	"	"					"	"	"	Clock A to Q_{2A}	"	"	"	"	"	"	"
		123	"		OUT			"	"	"	"					"	"	"	Clock A to Q_{3A}	"	"	"	"	"	"	"
		124	"					"	"	"	"	OUT				"	"	"	Clock A to Q_{4A}	"	"	"	"	"	"	"
		125	"					"	"	"	"				OUT	"	"	"	Clock B to Q_{1B}	"	"	"	"	"	"	"
		126	"					"	"	"	"			OUT		"	"	"	Clock B to Q_{2B}	"	"	"	"	"	"	"
		127	"					"	"	"	"		OUT			"	"	"	Clock B to Q_{3B}	"	"	"	"	"	"	"
		128	"	OUT				"	"	"	"					"	"	"	Clock B to Q_{4B}	"	"	"	"	"	"	"
t_{PLH1}		129	"				OUT	"	"	"	"					"	"	"	Clock A to Q_{1A}	"	"	"	"	"	"	"
		130	"			OUT		"	"	"	"					"	"	"	Clock A to Q_{2A}	"	"	"	"	"	"	"
		131	"		OUT			"	"	"	"					"	"	"	Clock A to Q_{3A}	"	"	"	"	"	"	"
		132	"					"	"	"	"	OUT				"	"	"	Clock A to Q_{4A}	"	"	"	"	"	"	"
		133	"					"	"	"	"				OUT	"	"	"	Clock B to Q_{1B}	"	"	"	"	"	"	"
		134	"					"	"	"	"			OUT		"	"	"	Clock B to Q_{2B}	"	"	"	"	"	"	"
		135	"					"	"	"	"		OUT			"	"	"	Clock B to Q_{3B}	"	"	"	"	"	"	"
		136	"	OUT				"	"	"	"					"	"	"	Clock B to Q_{4B}	"	"	"	"	"	"	"

See footnotes at end of device type 53.

TABLE III. Group A inspection for device type 53 - Continued.

Symbol	MIL-STD-883 method	Cases E,F,Z Test no.	Terminal conditions and limits 1/ Clock B 1	Q_{4B} 2	Q_{3A} 3	Q_{2A} 4	Q_{1A} 5	Reset A 6	Data A 7	V_{SS} 8	Clock A 9	Q_{4A} 10	Q_{3B} 11	Q_{2B} 12	Q_{1B} 13	Reset B 14	Data B 15	V_{DD} 16	Measured terminal	Test limits Subgroup 9 T_C=25°C Min	Subgroup 9 Max	Subgroup 10 T_C=125°C Min	Subgroup 10 Max	Subgroup 11 T_C=-55°C Min	Subgroup 11 Max	Unit
t_{PHL2}	3003 Fig. 8	137	GND				OUT	IN	IN	GND	GND					IN	IN	5.0 V	Reset A to Q_{1A}	20	368	30	490	20	368	ns
		138	"			OUT		"	"	"	"					"	"	"	Reset A to Q_{2A}	"	"	"	"	"	"	"
		139	"		OUT			"	"	"	"					"	"	"	Reset A to Q_{3A}	"	"	"	"	"	"	"
		140	"					"	"	"	"	OUT				"	"	"	Reset A to Q_{4A}	"	"	"	"	"	"	"
		141	"					"	"	"	"				OUT	"	"	"	Reset B to Q_{1B}	"	"	"	"	"	"	"
		142	"					"	"	"	"			OUT		"	"	"	Reset B to Q_{2B}	"	"	"	"	"	"	"
		143	"					"	"	"	"		OUT			"	"	"	Reset B to Q_{3B}	"	"	"	"	"	"	"
		144	"	OUT				"	"	"	"					"	"	"	Reset B to Q_{4B}	"	"	"	"	"	"	"
t_{THL}	3004 Fig. 8	145	IN				OUT	GND	"	"	IN					GND	"	"	Q_{1A}	13	210	18	280	13	210	"
		146	"			OUT		"	"	"	"					"	"	"	Q_{2A}	"	"	"	"	"	"	"
		147	"		OUT			"	"	"	"					"	"	"	Q_{3A}	"	"	"	"	"	"	"
		148	"					"	"	"	"	OUT				"	"	"	Q_{4A}	"	"	"	"	"	"	"
		149	"					"	"	"	"				OUT	"	"	"	Q_{1B}	"	"	"	"	"	"	"
		150	"					"	"	"	"			OUT		"	"	"	Q_{2B}	"	"	"	"	"	"	"
		151	"					"	"	"	"		OUT			"	"	"	Q_{3B}	"	"	"	"	"	"	"
		152	"	OUT				"	"	"	"					"	"	"	Q_{4B}	"	"	"	"	"	"	"
t_{TLH}		153	"				OUT	"	"	"	"					"	"	"	Q_{1A}	"	"	"	"	"	"	"
		154	"			OUT		"	"	"	"					"	"	"	Q_{2A}	"	"	"	"	"	"	"
		155	"		OUT			"	"	"	"					"	"	"	Q_{3A}	"	"	"	"	"	"	"
		156	"					"	"	"	"	OUT				"	"	"	Q_{4A}	"	"	"	"	"	"	"
		157	"					"	"	"	"				OUT	"	"	"	Q_{1B}	"	"	"	"	"	"	"
		158	"					"	"	"	"			OUT		"	"	"	Q_{2B}	"	"	"	"	"	"	"
		159	"					"	"	"	"		OUT			"	"	"	Q_{3B}	"	"	"	"	"	"	"
		160	"	OUT				"	"	"	"					"	"	"	Q_{4B}	"	"	"	"	"	"	"
f_{CL} (max) 10/		161	"				OUT	"	"	"	"					"	"	"	Clock A		.5		.667		.5	μs
		162	"			OUT		"	"	"	"					"	"	"	"		"		"		"	"
		163	"		OUT			"	"	"	"					"	"	"	"		"		"		"	"
		164	"					"	"	"	"	OUT				"	"	"	"		"		"		"	"
		165	"					"	"	"	"				OUT	"	"	"	Clock B		"		"		"	"
		166	"					"	"	"	"			OUT		"	"	"	"		"		"		"	"
		167	"					"	"	"	"		OUT			"	"	"	"		"		"		"	"
		168	"	OUT				"	"	"	"					"	"	"	"		"		"		"	"

1/ Terminals not designated may be "HIGH" level logic, "LOW" level logic or open except as follows: $V_{IC(pos)}$ tests; the V_{SS} terminal shall be open.
$V_{IC(neg)}$ tests; the V_{DD} terminal shall be open. I_{SS} test, the output terminal shall be open.

2/ I_{SS} test measurements shall be performed in sequence.

3/ Apply a clock pulse; V_{IN} = 0 V dc to V_{DD} until proper output state is achieved.

4/ V_{IH} and V_{IL} tests are performed by repeating the truth table tests (numbers 102 through 120) using the input conditions as follows:

Test	V_{DD}	Input H	Input L	Output H	Output L
V_{IH1} V_{IL1}	5.0 V	3.5 V	1.5 V	4.5 V	0.5 V
V_{IH2} V_{IL2}	10.0 V	7.0 V	3.0 V	9.0 V	1.0 V
V_{IH3} V_{IL3}	15.0 V	11.0 V	4.0 V	13.5 V	1.5 V

5/ The device manufacturer may, at his option, measure I_{IL} and I_{IH} at 25°C for each individual input or measure all inputs together.

6/ See 4.4.1c.

7/ Truth table test shall be run in sequence.

8/ The truth table test shall be performed at V_{IH} and V_{DD} ≤5.0 V dc and 18.0 V dc.

9/ The output voltage limits for each temperature are "H" = V_{DD} -0.5 V min and "L" = V_{SS} +0.5 V min.

10/ The maximum clock frequency (f_{CL}) requirement is considered met if proper output state changes occur with the pulse repetition period set to that given in the limits column.

TABLE III. Group A inspection for device type 54.

Symbol	MIL-STD-883 method	Cases E,F,Z Test no.	Terminal conditions and limits 1/ P_{I8} 1	C_6 2	Q_8 3	P_{I4} 4	P_{I3} 5	P_{I2} 6	P_{I1} 7	V_{SS} 8	P/S control 9	Clock 10	Serial In 11	Q_7 12	P_{I5} 13	P_{I6} 14	P_{I7} 15	V_{DD} 16	Measured terminal	Test limits Subgroup 1 T_C=25°C Min	Max	Subgroup 2 T_C=125°C Min	Max	Subgroup 3 T_C=-55°C Min	Max	Unit
V_{IC} (pos)		1	1 mA															GND	P_{I8}		1.5					V
		2				1 mA												"	P_{I4}		"					"
		3					1 mA											"	P_{I3}		"					"
		4						1 mA										"	P_{I2}		"					"
		5							1 mA									"	P_{I1}		"					"
		6									1 mA							"	P/S control		"					"
		7										1 mA						"	Clock		"					"
		8											1 mA					"	Serial In		"					"
		9													1 mA			"	P_{I5}		"					"
		10														1 mA		"	P_{I6}		"					"
		11															1 mA	"	P_{I7}		"					"
V_{IC} (neg)		12	-1 mA							GND									P_{I8}		-6					"
		13				-1 mA				"									P_{I4}		"					"
		14					-1 mA			"									P_{I3}		"					"
		15						-1 mA		"									P_{I2}		"					"
		16							-1 mA	"									P_{I1}		"					"
		17								"	-1 mA								P/S control		"					"
		18								"		-1 mA							Clock		"					"
		19								"			-1 mA						Serial In		"					"
		20								"					-1 mA				P_{I5}		"					"
		21								"						-1 mA			P_{I6}		"					"
		22								"							-1 mA		P_{I7}		"					"
I_{SS} 2/	3005	23	GND			GND	18.0 V	GND	18.0 V	"	18.0 V	GND	GND		18.0 V	GND	18.0 V	18.0 V	V_{SS}		-0.5		-5.0			μA
		24	18.0 V			18.0 V	GND	18.0 V	GND	"	18.0 V	GND	18.0 V		GND	18.0 V	GND	"	V_{SS}		"		"			"
		25	18.0 V			18.0 V	GND	18.0 V	GND	"	18.0 V	18.0 V	18.0 V		GND	18.0 V	GND	"	None		"		"			"
		26	18.0 V			18.0 V	GND	18.0 V	GND	"	GND	"	18.0 V		GND	18.0 V	GND	"	V_{SS}		"		"			"
		27	GND			GND	18.0 V	GND	18.0 V	"	18.0 V	"	GND		18.0 V	GND	18.0 V	"	None		"		"			"
		28	GND			GND	18.0 V	GND	18.0 V	"	GND	"	GND		18.0 V	GND	18.0 V	"	V_{SS}		"		"			"
		29	GND			GND	18.0 V	GND	18.0 V	"	GND	GND	GND		18.0 V	GND	18.0 V	"	V_{SS}		"		"			"
V_{OH3}	3006	30	15.0 V			15.0 V	15.0 V	15.0 V	15.0 V		15.0 V	3/	15.0 V		15.0 V	15.0 V	15.0 V	15.0 V	Q_6	14.95		14.95		14.95		V
		31	15.0 V			15.0 V	15.0 V	15.0 V	15.0 V	"		"	15.0 V		15.0 V	15.0 V	15.0 V	"	Q_7	14.95		14.95		14.95		"
		32	15.0 V			15.0 V	15.0 V	15.0 V	15.0 V	"		"	15.0 V		15.0 V	15.0 V	15.0 V	"	Q_8	14.95		14.95		14.95		"
V_{OL3}	3007	33	GND			GND	GND	GND	GND	"		"	GND		GND	GND	GND	"	Q_6		.05		.05		.05	"
		34	GND			GND	GND	GND	GND	"		"	GND		GND	GND	GND	"	Q_7		.05		.05		.05	"
		35	GND			GND	GND	GND	GND	"		"	GND		GND	GND	GND	"	Q_8		.05		.05		.05	"
V_{IH1}		36	4/	4/	4/	4/	4/	4/	4/	"	4/	4/	4/	4/	4/	4/	4/	4/	All outputs	4/	4/	4/	4/	4/	4/	4/
V_{IH2}		37	"	"	"	"	"	"	"	"	"	"	"	"	"	"	"	"	"	"	"	"	"	"	"	"
V_{IH3}		38	"	"	"	"	"	"	"	"	"	"	"	"	"	"	"	"	"	"	"	"	"	"	"	"
V_{IL1}		39	"	"	"	"	"	"	"	"	"	"	"	"	"	"	"	"	"	"	"	"	"	"	"	"
V_{IL2}		40	"	"	"	"	"	"	"	"	"	"	"	"	"	"	"	"	"	"	"	"	"	"	"	"
V_{IL3}		41	"	"	"	"	"	"	"	"	"	"	"	"	"	"	"	"	"	"	"	"	"	"	"	"
I_{OL1}		42	GND	0.4 V		GND	GND	GND	GND	"	5.0 V	3/	GND		GND	GND	GND	5.0 V	Q_6	0.51		0.36		0.64		mA
		43	"			"	"	"	"	"	5.0 V	"	"	0.4 V	"	"	"	5.0 V	Q_7	0.51		0.36		0.64		"
		44	"		0.4 V	"	"	"	"	"	5.0 V	"	"		"	"	"	5.0 V	Q_8	0.51		0.36		0.64		"
I_{OL2}		45	"	1.5 V		"	"	"	"	"	15.0 V	"	"		"	"	"	15.0 V	Q_6	3.4		2.4		4.2		"
		46	"			"	"	"	"	"	15.0 V	"	"	1.5 V	"	"	"	15.0 V	Q_7	3.4		2.4		4.2		"
		47	"		1.5 V	"	"	"	"	"	15.0 V	"	"		"	"	"	15.0 V	Q_8	3.4		2.4		4.2		"
I_{OH1}		48	5.0 V	4.6 V		5.0 V	5.0 V	5.0 V	5.0 V	"	5.0 V	"	5.0 V		5.0 V	5.0 V	5.0 V	5.0 V	Q_6	-0.51		-0.36		-0.64		"
		49	5.0 V			5.0 V	5.0 V	5.0 V	5.0 V	"	5.0 V	"	5.0 V	4.6 V	5.0 V	5.0 V	5.0 V	5.0 V	Q_7	-0.51		-0.36		-0.64		"
		50	5.0 V		4.6 V	5.0 V	5.0 V	5.0 V	5.0 V	"	5.0 V	"	5.0 V		5.0 V	5.0 V	5.0 V	5.0 V	Q_8	-0.51		-0.36		-0.64		"

See footnotes at end of device type 54.

TABLE III. Group A inspection for device type 54 - Continued.

Symbol	MIL-STD-883 method	Cases E,F,Z	Terminal conditions and limits 1/																	Measured terminal	Test limits						Unit
			P_{I8}	Q_6	Q_8	P_{I4}	P_{I3}	P_{I2}	P_{I1}	V_{SS}	P/S control	Clock	Serial In	Q_7	P_{I5}	P_{I6}	P_{I7}	V_{DD}		Subgroup 1 T_C=25°C		Subgroup 2 T_C=125°C		Subgroup 3 T_C=-55°C		
		Test no.	1	2	3	4	5	6	7	8	9	10	11	12	13	14	15	16		Min	Max	Min	Max	Min	Max	
I_{OH2}		51	15.0 V	13.5 V		15.0 V	15.0 V	15.0 V	15.0 V	GND	15.0 V	3/	15.0 V		15.0 V	15.0 V	15.0 V	15.0 V	Q_6	-3.4		-2.4		-4.2		mA
		52	15.0 V			15.0 V	15.0 V	15.0 V	15.0 V	"	15.0 V	3/	15.0 V	13.5 V	15.0 V	15.0 V	15.0 V	15.0 V	Q_7	-3.4		-2.4		-4.2		mA
		53	15.0 V		13.5 V	15.0 V	15.0 V	15.0 V	15.0 V	"	15.0 V	3/	15.0 V		15.0 V	15.0 V	15.0 V	15.0 V	Q_8	-3.4		-2.4		-4.2		mA
I_{IH1} 5/	3010	54	18.0 V			18.0 V	18.0 V	18.0 V	18.0 V	"	18.0 V	18.0 V	18.0 V		18.0 V	18.0 V	18.0 V	18.0 V	All inputs together		11					mA
I_{IH2}		55	18.0 V			GND	GND	GND	GND	"	GND	GND	GND		GND	GND	GND	"	P_{I8}		1.0		45			"
		56	GND			18.0 V	GND	GND	"	"	"	"	"		"	"	"	"	P_{I4}		"		"			"
		57	"			GND	18.0 V	GND	"	"	"	"	"		"	"	"	"	P_{I3}		"		"			"
		58	"			"	GND	18.0 V	"	"	"	"	"		"	"	"	"	P_{I2}		"		"			"
		59	"			"	"	GND	18.0V	"	"	"	"		"	"	"	"	P_{I1}		"		"			"
		60	"			"	"	"	GND	"	18.0 V	"	"		"	"	"	"	P/S control		"		"			"
		51	"			"	"	"	"	"	GND	18.0 V	"		"	"	"	"	Clock		"		"			"
		52	"			"	"	"	"	"	"	GND	18.0 V		"	"	"	"	Serial In		"		"			"
		53	"			"	"	"	"	"	"	"	GND		18.0 V	"	"	"	P_{I5}		"		"			"
		54	"			"	"	"	"	"	"	"	"		GND	18.0 V	"	"	P_{I6}		"		"			"
		55	"			"	"	"	"	"	"	"	"			GND	18.0 V	"	P_{I7}		"		"			"
I_{IL1} 5/	3009	56	"			"	"	"	"	"	"	"	"		"	"	"	"	All inputs together		-11					"
I_{IL2}		67	"			"	"	"	"	"	"	"	"		"	"	"	"	P_{I8}		-1.0		-45			"
		68	"			"	"	"	"	"	"	"	"		"	"	"	"	P_{I4}		"		"			"
		69	"			"	"	"	"	"	"	"	"		"	"	"	"	P_{I3}		"		"			"
		70	"			"	"	"	"	"	"	"	"		"	"	"	"	P_{I2}		"		"			"
		71	"			"	"	"	"	"	"	"	"		"	"	"	"	P_{I1}		"		"			"
		72	"			"	"	"	"	"	"	"	"		"	"	"	"	P/S control		"		"			"
		73	"			"	"	"	"	"	"	"	"		"	"	"	"	Clock		"		"			"
		74	"			"	"	"	"	"	"	"	"		"	"	"	"	Serial In		"		"			"
		75	"			"	"	"	"	"	"	"	"		"	"	"	"	P_{I5}		"		"			"
		76	"			"	"	"	"	"	"	"	"		"	"	"	"	P_{I6}		"		"			"
		77	"			"	"	"	"	"	"	"	"		"	"	"	"	P_{I7}		"		"			"
																				Subgroup 4 T_C = 25°C						
																				Min	Max					
C_i	3012	78	6/							GND								GND	P_{I8}		12					pF
		79				6/				"								"	P_{I4}		"					"
		80					6/			"								"	P_{I3}		"					"
		81						6/		"								"	P_{I2}		"					"
		82							6/	"								"	P_{I1}		"					"
		83								"	6/							"	P/S control		"					"
		84								"		6/						"	Clock		"					"
		85								"			6/					"	Serial In		"					"
		86								"					6/			"	P_{I5}		"					"
		87								"						6/		"	P_{I6}		"					"
		88								"							6/	"	P_{I7}		"					"
																				Subgroup 7 T_C = 25°C		Subgroup 8 T_C=-55°C		Subgroup 9 T_C=125°C		
																				Min	Max	Min	Max	Min	Max	
Truth table test 7/	3014	89	GND	L	L	GND	GND	GND	GND	GND	5.0 V	5.0 V	GND	L	GND	GND	GND	5.0 V	All outputs	9/	10/					
		90	GND	"	"	GND	GND	GND	GND	"	GND	5.0 V	GND	"	GND	GND	GND	"	"							
		91	5.0 V	"	"	5.0 V	5.0 V	5.0 V	GND	"	GND	8/	5.0 V	"	5.0 V	5.0 V	5.0 V	"	"							
		92	5.0 V	"	"	5.0 V	5.0 V	GND	5.0 V	"	GND	8/	GND	"	5.0 V	5.0 V	5.0 V	"	"							

See footnotes at end of device type 54.

TABLE III. Group A inspection for device type 54 - Continued.

Symbol	MIL-STD-883 method	Cases E,F,Z Test no.	Terminal conditions and limits 1/ P_{I8} 1	Q_6 2	Q_8 3	P_{I4} 4	P_{I3} 5	P_{I2} 6	P_{I1} 7	V_{SS} 8	P/S control 9	Clock 10	Serial In 11	Q_7 12	P_{I5} 13	P_{I6} 14	P_{I7} 15	V_{DD} 16	Measured terminal	Test limits Subgroup 7 T_C=25°C Min	Subgroup 7 Max	Subgroup 8 T_C=-55°C Min	Subgroup 8 Max	Subgroup 8 T_C=125°C Min	Subgroup 8 Max	Unit
Truth table test 7/	3014	93	5.0 V	L	L	5.0 V	GND	5.0 V	GND	GND	GND	8/	5.0 V	L	5.0 V	5.0 V	5.0 V	5.0 V	All outputs	See 9/ and 10/						
		94	"	"	"	GND	5.0 V	GND	"	"	"	8/	"	"	5.0 V	"	"	"								
		95	"	"	"	5.0 V	GND	"	"	"	"	8/	"	"	GND	"	"	"								
		96	"	"	"	5.0 V	"	"	"	"	"	GND	"	"	GND	"	"	"								
		97	"	H	"	GND	"	"	"	"	"	5.0 V	"	"	5.0 V	GND	"	"								
		98	"	H	"	"	"	"	"	"	"	GND	"	"	5.0 V	GND	"	"								
		99	"	L	"	"	"	"	"	"	"	5.0 V	"	H	GND	5.0 V	GND	"								
		100	"	L	"	"	"	"	"	"	"	GND	"	H	"	5.0 V	GND	"								
		101	GND	H	H	"	"	"	"	"	"	5.0 V	"	L	"	GND	5.0 V	"								
		102	5.0 V	"	L	"	"	"	"	"	"	8/	"	H	"	"	GND	"								
		103	GND	"	H	"	"	"	"	"	"	8/	"	H	"	"	"	"								
		104	"	"	H	"	"	"	"	"	"	GND	"	H	"	"	"	"								
		105	"	L	L	"	"	"	"	"	5.0 V	GND	"	L	"	"	"	"								
		106	"	"	"	"	"	"	"	"	GND	GND	GND	"	"	"	"	"								
		107	5.0 V	"	"	5.0 V	5.0 V	5.0 V	5.0 V	"	"	5.0 V	"	"	5.0 V	5.0 V	5.0 V	"								
		108	"	"	"	"	"	"	"	"	"	8/	"	"	"	"	"	"								
		109	"	"	"	"	"	"	"	"	"	"	"	"	"	"	"	"								
		110	"	"	"	"	"	"	"	"	"	"	"	"	"	"	"	"								
		111	"	"	"	"	"	"	"	"	"	GND	"	"	"	"	"	"								
		112	"	"	"	"	"	"	"	"	5.0 V	GND	"	H	"	"	"	"								
		113	"	H	H	"	"	"	"	"	GND	GND	5.0 V	"	"	"	"	"								
		114	"	"	"	"	"	"	"	"	GND	5.0 V	"	"	GND	GND	GND	"								
		115	GND	"	"	GND	GND	GND	"	"	"	8/	"	"	"	"	"	"								
		116	"	"	"	GND	GND	5.0 V	"	"	"	"	"	"	"	"	"	"								
		117	"	"	"	GND	5.0 V	"	"	"	"	"	"	"	"	"	"	"								
		118	"	"	"	5.0 V	5.0 V	"	"	"	"	"	"	"	"	"	"	"								
		119	"	"	"	5.0 V	5.0 V	"	"	"	"	8/	5.0 V	"	GND	"	"	"								
		120	"	L	L	GND	GND	GND	GND	"	8/	GND	"	L	GND	"	"	"								
		121	"	"	"	GND	GND	"	"	"	GND	8/	"	"	GND	"	"	"								
		122	5.0 V	"	"	5.0 V	5.0 V	"	"	"	"	"	"	"	5.0 V	5.0 V	5.0 V	"								
		123	"	"	"	5.0 V	GND	"	"	"	"	"	"	"	5.0 V	"	"	"								
		124	"	"	"	GND	GND	"	"	"	"	"	"	"	5.0 V	"	"	"								
		125	"	"	"	GND	GND	"	"	"	"	"	"	"	GND	"	"	"								

Symbol	MIL-STD-883 method	Cases E,F,Z Test no.	P_{I8} 1	Q_6 2	Q_8 3	P_{I4} 4	P_{I3} 5	P_{I2} 6	P_{I1} 7	V_{SS} 8	P/S control 9	Clock 10	Serial In 11	Q_7 12	P_{I5} 13	P_{I6} 14	P_{I7} 15	V_{DD} 16	Measured terminal	Subgroup 9 T_C= 25°C Min	Subgroup 9 Max	Subgroup 10 T_C=125°C Min	Subgroup 10 Max	Subgroup 11 T_C=-55°C Min	Subgroup 11 Max	Unit
t_{PHL1}	3003 Fig. 9	126		OUT		IN	IN	IN	IN	GND	IN	GND			IN	IN		5.0 V	P/S	20	368	30	490	20	368	ns
		127								"	"	"		OUT			IN	"	to Q_6 P/S	"	"	"	"	"	"	"
		128	IN		OUT					"	"	"						"	to Q_7 P/S to Q_8	"	"	"	"	"	"	"
t_{PLH1}		129		OUT		IN	IN	IN	IN	"	"	"			IN	IN		"	P/S	"	"	"	"	"	"	"
		130								"	"	"		OUT			IN	"	to Q_6 P/S	"	"	"	"	"	"	"
		131	IN		OUT					"	"	"						"	to Q_7 P/S to Q_8	"	"	"	"	"	"	"
t_{PHL2}		132		OUT						"	GND	IN	IN					"	Clock	"	"	"	"	"	"	"
		133								"	"	"	"	OUT				"	to Q_6 Clock	"	"	"	"	"	"	"
		134			OUT					"	"	"	"					"	to Q_7 Clock to Q_8	"	"	"	"	"	"	"
t_{PLH2}		135		OUT						"	"	"	"					"	Clock	"	"	"	"	"	"	"
		136								"	"	"	"	OUT				"	to Q_6 Clock	"	"	"	"	"	"	"
		137			OUT					"	"	"	"					"	to Q_7 Clock to Q_8	"	"	"	"	"	"	"

See footnotes at end of device type 54.

TABLE III. Group A inspection for device type 54 - Continued.

Symbol	MIL-STD-883 method	Cases E,F,Z	Terminal conditions and limits 1/																Measured terminal	Test limits						Unit
			P_{I8}	Q_6	Q_8	P_{I4}	P_{I3}	P_{I2}	P_{I1}	V_{SS}	P/S control	Clock	Serial In	Q_7	P_{I5}	P_{I6}	P_{I7}	V_{DD}		Subgroup 9 T_C=25°C		Subgroup 10 T_C= 125°C		Subgroup 11 T_C = -55°C		
		Test no.	1	2	3	4	5	6	7	8	9	10	11	12	13	14	15	16		Min	Max	Min	Max	Min	Max	
t_{THL}	3004 Fig. 9	138		OUT						GND	GND	IN	IN					5.0 V	Q_6	13	210	18	280	13	210	ns
		139								"	"	"	"	OUT				"	Q_7	"	"	"	"	"	"	"
		140			OUT					"	"	"	"					"	Q_8	"	"	"	"	"	"	"
t_{TLH}		141		OUT						"	"	"	"					"	Q_6	"	"	"	"	"	"	"
		142								"	"	"	"	OUT				"	Q_7	"	"	"	"	"	"	"
		143			OUT					"	"	"	"					"	Q_8	"	"	"	"	"	"	"
f_{CL} 11/		144		OUT						"	"	"	"					"	Clock		.75		1.0		.75	µs
		145								"	"	"	"	OUT				"	Clock		"		"		"	µs
		146			OUT					"	"	"	"					"	Clock		"		"		"	µs

1/ Pins not designated may be "high" level logic, "low" level logic, or open. Exceptions are as follows: $V_{IC(pos)}$ tests, the V_{SS} terminal shall be open; $V_{IC(neg)}$ tests, the V_{DD} terminal shall be open; I_{SS} tests, the output terminals shall be open.

2/ The I_{SS} test measurements shall be performed in sequence.

3/ Apply clock pulse V_{IN} = 0 V dc to V_{DD} until proper state is achieved.

4/ V_{IH} and V_{IL} tests are performed by repeating the truth table tests (numbers 89 through 125) using the input and output conditions as shown below:

		Input		Output	
Test	V_{DD}	H	L	H	L
V_{IH1} V_{IL1}	5.0 V	3.5 V	1.5 V	Min 4.5 V	Max 0.5 V
V_{IH2} V_{IL2}	10.0 V	7.0 V	3.0 V	9.0 V	1.0 V
V_{IH3} V_{IL3}	15.0 V	11.0 V	4.0 V	13.5 V	1.5 V

5/ The device manufacturer may, at his option, measure I_{IL} and I_{IH} at 25°C for each individual input or measure all inputs together.

6/ See 4.4.1c.

7/ The truth table test shall be performed in sequence.

8/ Apply clock pulse, V_{IN} = 0 V dc to V_{DD}, t_p = 500 ns (min), t_{THL} = 10 ns ±10%.

9/ The output voltage limits for each temperature are "H" = V_{DD} -0.5 V min, and "L" = V_{SS} +0.5 V min.

10/ The truth table test shall be performed at V_{IH} and $V_{DD} \leq$ 5.0 V dc and $\geq$ 18 V dc.

11/ The maximum clock frequency (f_{CL}) requirement is considered met if proper output state changes occur with the pulse repetition period set to that given in the limits column.

TABLE III. Group A inspection for device type 55.

Symbol	MIL-STD-883 method	Cases E,F,Z	Terminal conditions and limits 1/																Measured terminal	Test limits						Unit
			Recir In	Clock	NC	NC	NC	Q	$\overline{Q}$	V_{SS}	Delayed clock	Mode cont	NC	NC	NC	NC	Data In	V_{DD}		Subgroup 1 T_C=25°C		Subgroup 2 T_C=125°C		Subgroup 3 T_C=-55°C		
		Test no.	1	2	3	4	5	6	7	8	9	10	11	12	13	14	15	16		Min	Max	Min	Max	Min	Max	
V_{IC} (pos)		1	1 mA															GND	Recir In		1.5					V
		2		1 mA														"	Clock		"					"
		3										1 mA						"	Mode Cont		"					"
		4															1 mA	"	Data In		"					"
V_{IC} (neg)		5	-1 mA							GND									Recir In		-6					"
		6		-1 mA						"									Clock		"					"
		7								"		-1 mA							Mode Cont		"					"
		8								"							-1 mA		Data In		"					"
I_{SS} 2/	3005	9	GND	3/						"		GND					18.0 V	18.0 V	None		-2		-20			μA
		10	"	"						"		"					GND	"	"		"		"			"
		11	"	"						"		"					18.0 V	"	"		"		"			"
		12	"	"						"		"					GND	"	"		"		"			"
		13	"	"						"		"					18.0 V	"	"		"		"			"
		14	"	"						"		"					GND	"	"		"		"			"
		15	"	"						"		"					18.0 V	"	"		"		"			"
		16	"	"						"		"					GND	"	"		"		"			"
		17	"	"						"		"					18.0 V	"	"		"		"			"
		18	"	"						"		"					GND	"	"		"		"			"
		19	"	"						"		"					18.0 V	"	"		"		"			"
		20	"	"						"		"					GND	"	"		"		"			"
		21	"	"						"		"					18.0 V	"	"		"		"			"
		22	"	"						"		"					GND	"	"		"		"			"
		23	"	"						"		"					18.0 V	"	"		"		"			"
		24	"	"						"		"					GND	"	"		"		"			"
		25	"	"						"		"					18.0 V	"	"		"		"			"
		26	"	"						"		"					GND	"	"		"		"			"
		27	"	"						"		"					18.0 V	"	"		"		"			"
		28	"	"						"		"					GND	"	"		"		"			"
		29	"	"						"		"					18.0 V	"	"		"		"			"
		30	"	"						"		"					GND	"	"		"		"			"
		31	"	"						"		"					18.0 V	"	"		"		"			"
		32	"	"						"		"					GND	"	"		"		"			"
		33	"	"						"		"					18.0 V	"	"		"		"			"
		34	"	"						"		"					GND	"	"		"		"			"
		35	"	"						"		"					18.0 V	"	"		"		"			"
		36	"	"						"		"					GND	"	"		"		"			"
		37	"	"						"		"					18.0 V	"	"		"		"			"
		38	"	"						"		"					GND	"	"		"		"			"
		39	"	"						"		"					18.0 V	"	"		"		"			"
		40	"	"						"		"					GND	"	"		"		"			"
		41	"	"						"		"					18.0 V	"	"		"		"			"
		42	"	"						"		"					GND	"	"		"		"			"
		43	"	"						"		"					18.0 V	"	"		"		"			"
		44	"	"						"		"					GND	"	"		"		"			"
		45	"	"						"		"					18.0 V	"	"		"		"			"
		46	"	"						"		"					GND	"	"		"		"			"
		47	"	"						"		"					18.0 V	"	"		"		"			"
		48	"	"						"		"					GND	"	"		"		"			"
		49	"	"						"		"					18.0 V	"	"		"		"			"
		50	"	"						"		"					GND	"	"		"		"			"
		51	"	"						"		"					18.0 V	"	"		"		"			"
		52	"	"						"		"					GND	"	"		"		"			"
		53	"	"						"		"					18.0 V	"	"		"		"			"
		54	"	"						"		"					GND	"	"		"		"			"
		55	"	"						"		"					18.0 V	"	"		"		"			"
		56	"	"						"		"					GND	"	"		"		"			"
		57	"	"						"		"					18.0 V	"	"		"		"			"
		58	"	"						"		"					GND	"	"		"		"			"
		59	"	"						"		"					18.0 V	"	"		"		"			"
		60	"	"						"		"					GND	"	"		"		"			"
		61	"	"						"		"					18.0 V	"	"		"		"			"
		62	"	"						"		"					GND	"	"		"		"			"

See footnotes at end of device type 55.

TABLE III. Group A inspection for device type 55 - Continued.

Symbol	MIL-STD-883 method	Cases E,F,Z Test no.	Terminal conditions and limits 1/ Recir In 1	Clock 2	NC 3	NC 4	NC 5	Q 6	$\overline{Q}$ 7	V_{SS} 8	Delayed clock 9	Mode cont 10	NC 11	NC 12	NC 13	NC 14	Data In 15	V_{DD} 16	Measured terminal	Test limits Subgroup 1 T_C=25°C Min	Max	Subgroup 2 T_C=125°C Min	Max	Subgroup 3 T_C=-55°C Min	Max	Unit
I_{SS} 2/	3005	63	GND	3/						GND		GND					18.0 V	18.0 V	None		-2		-20			μA
		64	"	"						"		"					GND	"	"		"		"			"
		65	"	"						"		"					18.0 V	"	"		"		"			"
		66	"	"						"		"					GND	"	"		"		"			"
		67	"	"						"		"					18.0 V	"	"		"		"			"
		68	"	"						"		"					GND	"	"		"		"			"
		69	"	"						"		"					18.0 V	"	"		"		"			"
		70	"	"						"		"					GND	"	"		"		"			"
		71	"	18.0 V						"		"					18.0 V	"	V_{SS}		"		"			"
		72	"	GND						"		"					18.0 V	"	V_{SS}		"		"			"
		73	"	18.0 V						"		"					18.0 V	"	None		"		"			"
		74	18.0 V	"						"		"					GND	"	V_{SS}		"		"			"
		75	18.0 V	"						"		18.0 V					GND	"	V_{SS}		"		"			"
		76	GND	"						"		18.0 V					18.0 V	"	V_{SS}		"		"			"
V_{OH3}	3006	77	GND	4/						"		GND					15.0 V	15.0 V	Q	14.95		14.95		14.95		V
		78	GND	4/						"		"					GND	"	$\overline{Q}$	"		"		"		"
		79	GND	15.0 V						"		"					15.0 V	"	Delay clock	"		"		"		"
V_{OL3}	3007	80	GND	4/						"		"					GND	"	Q		0.05		0.05		0.05	"
		81	GND	4/						"		"					15.0 V	"	$\overline{Q}$		"		"		"	"
		82	GND	GND						"		"					GND	"	Delay clock		"		"		"	"
V_{IH1}		83	5/	5/	5/	5/	5/	5/	5/	"	5/	5/	5/	5/	5/	5/	5/	5/	All outputs	5/	5/	5/	5/	5/	5/	5/
V_{IH2}		84	"	"	"	"	"	"	"	"	"	"	"	"	"	"	"	"	"	"	"	"	"	"	"	"
V_{IH3}		85	"	"	"	"	"	"	"	"	"	"	"	"	"	"	"	"	"	"	"	"	"	"	"	"
V_{IL1}		86	"	"	"	"	"	"	"	"	"	"	"	"	"	"	"	"	"	"	"	"	"	"	"	"
V_{IL2}		87	"	"	"	"	"	"	"	"	"	"	"	"	"	"	"	"	"	"	"	"	"	"	"	"
V_{IL3}		88	"	"	"	"	"	"	"	"	"	"	"	"	"	"	"	"	"	"	"	"	"	"	"	"
I_{OL1}		89	GND	4/				0.4 V		"		GND					GND	5.0 V	Q	0.51		0.36		0.64		mA
		90	"	4/					0.4 V	"		"					5.0 V	5.0 V	$\overline{Q}$	0.51		0.36		0.64		"
		91	"	GND						"	0.4 V	"					GND	5.0 V	Delay clock	0.51		0.36		0.64		"
I_{OL2}		92	"	4/				1.5 V		"		"					GND	15.0 V	Q	3.4		2.4		4.2		"
		93	"	4/					1.5 V	"		"					15.0 V	15.0 V	$\overline{Q}$	3.4		2.4		4.2		"
		94	"	GND						"	1.5 V	"					GND	15.0 V	Delay clock	3.4		2.4		4.2		"
I_{OH1}		95	"	4/						"		"					5.0 V	5.0 V	Q	-0.51		-0.36		-0.64		"
		96	"	4/						"		"					GND	5.0 V	$\overline{Q}$	-0.51		-0.36		-0.64		"
		97	"	5.0 V						"		"					5.0 V	5.0 V	Delay clock	-0.51		-0.36		-0.64		"
I_{OH2}		98	"	4/						"		"					15.0 V	15.0 V	Q	-3.4		-2.4		-4.2		"
		99	"	4/						"		"					GND	15.0 V	$\overline{Q}$	-3.4		-2.4		-4.2		"
		100	"	15.0 V						"		"					15.0 V	15.0 V	Delay clock	-3.4		-2.4		-4.2		"
I_{I1} 5/	3010	101	18.0 V	18.0 V						"		18.0 V					18.0 V	18.0 V	All inputs together		4					mA

See footnotes at end of device type 55.

TABLE III. Group A inspection for device type 55 - Continued.

Symbol	MIL-STD-883 method	Cases E,F,Z Test no.	Terminal conditions and limits 1/: Recir In 1	Clock 2	NC 3	NC 4	NC 5	Q 6	$\overline{Q}$ 7	V_{SS} 8	Delayed clock 9	Mode cont 10	NC 11	NC 12	NC 13	NC 14	Data In 15	V_{DD} 16	Measured terminal	Test limits: Subgroup 1 T_C=25°C Min	Subgroup 1 Max	Subgroup 2 T_C=125°C Min	Subgroup 2 Max	Subgroup 3 T_C=-55°C Min	Subgroup 3 Max	Unit
I_{IH2}	3010	102	18.0 V	GND						GND		GND					GND	18.0 V	Recir In			45				nA
		103	GND	18.0 V						"		GND					GND	"	Clock			"				"
		104	"	GND						"		18.0 V					GND	"	Mode cont			"				"
		105	"	"						"		GND					18.0 V	"	Data In			"				"
I_{IL1} 6/	3009	106	"	"						"		"					GND	"	All inputs together	-4						"
I_{IL2}		107	"	"						"		"					"	"	Recir In	-1		-45				"
		108	"	"						"		"					"	"	Clock	"		"				"
		109	"	"						"		"					"	"	Mode cont	"		"				"
		110	"	"						"		"					"	"	Data in	"		"				"
																				Subgroup 4 T_C=25°C Min	Max					
C_i	3012	111	7/	7/						GND								GND	Recir In		12					pF
		112								"								"	Clock		70					"
		113								"		7/						"	Mode cont		12					"
		114								"							7/	"	Data in		12					"
																				Subgroup 7 T_C=25°C Min	Max	Subgroup 8 T_C=125°C Min	Max	Subgroup 8 T_C=-55°C Min	Max	
Truth table test 8/	3014	115	GND	5.0 V						GND		GND					5.0 V	5.0 V	None	See 9/,10/,11/						
		116	GND	GND						"		"					5.0 V	"	"							
		117	GND	5.0 V						"		"					5.0 V	"	"							
		118	5.0 V	GND						"		"					GND	"	"							
		119	5.0 V	5.0 V						"		"					GND	"	"							
		120	GND	GND						"		"					5.0 V	"	"							
		121	"	5.0 V						"		"					"	"	"							
		122	"	GND						"		5.0 V					"	"	"							
		123	"	5.0 V						"		"					"	"	"							
		124	5.0 V	GND						"		"					GND	"	"							
		125	"	5.0 V						"		"					GND	"	"							
		126	"	12/						"		GND					5.0 V	"	"							
		127	"	5.0 V				H	L	"	H	"					"	"	All outputs							
		128	"	GND				H	L	"	L	"					"	"	"							
		129	"	5.0 V				L	H	"	H	"					"	"	"							
		130	"	GND				L	H	"	L	"					"	"	"							
		131	"	5.0 V				H	L	"	H	"					"	"	"							
		132	"	GND				H	L	"	L	"					"	"	"							
		133	"	5.0 V				L	H	"	H	"					"	"	"							
		134	"	GND				L	H	"	L	"					"	"	"							
		135	"	5.0 V				H	L	"	H	"					"	"	"							
																				Subgroup 9 T_C=25°C Min	Max	Subgroup 10 T_C=125°C Min	Max	Subgroup 11 T_C=-55°C Min	Max	
t_{PHL1}	3003 Fig.10	136	GND	IN				OUT		GND		GND					IN	5.0 V	Clock to Q	13	632	18	840	13	632	rs
t_{PHL2}		137	GND	IN					OUT	GND		GND					IN	5.0 V	Clock to $\overline{Q}$	"	632	"	840	"	632	rs
t_{PHL3}		138	GND	IN						GND	OUT	GND						5.0 V	Clock to Delayed clock	"	263	"	350	"	263	rs

See footnotes at end of device type 55.

TABLE III. Group A inspection for device type 55 - Continued.

Symbol	MIL-STD-883 method	Cases E,F,Z Test no.	Terminal conditions and limits 1/ 1 Recir in	2 Clock	3 NC	4 NC	5 NC	6 Q	7 $\bar{Q}$	8 V_{SS}	9 Delayed clock	10 Mode cont	11 NC	12 NC	13 NC	14 NC	15 Data In	16 V_{DD}	Measured terminal	Test limits Subgroup 9 T_C=25°C Min	Max	Subgroup 10 T_C=125°C Min	Max	Subgroup 11 T_C=-55°C Min	Max	Unit
t_{PHL4}	3003 Fig.12	139	IN	IN				OUT		GND		5.0 V						5.0 V	Clock to Q	13	632	18	840	13	632	ns
t_{PLH1}		140	GND	"				OUT		"		GND					IN	"	Clock to Q	"	"	"	"	"	"	"
t_{PLH2}		141	GND	"					OUT	"		GND					IN	"	Clock to Q	"	"	"	"	"	"	"
t_{PLH3}		142	GND	"						"	OUT	GND						"	Clock to delayed clock	"	263	"	350	"	263	"
t_{PLH4}		143	IN	"				OUT		"		5.0 V						"	Clock to Q	"	632	"	840	"	632	"
t_{THL1}	3004 Fig.10	144	GND	"				OUT		"		GND					IN	"	Q	10	210	14	280	10	210	"
t_{THL2}		145	"	"					OUT	"		"					IN	"	Q	"	210	"	280	"	210	"
t_{THL3}		146	"	"						"	OUT	"						"	Delay clock	"	150	"	200	"	150	"
t_{TLH1}		147	"	"				OUT		"		"					IN	"	Q	"	210	"	280	"	210	"
t_{TLH2}		148	"	"					OUT	"		"					IN	"	Q	"	210	"	280	"	210	"
t_{TLH3}		149	"	"						"	OUT	"						"	Delay clock	"	150	"	200	"	150	"
f_{CL} (max) 13/		150		"						"	OUT	"							Clock		.94		1.25		.94	µs
		151		"				OUT		"		"					IN	"	"		"		"		"	"
		152		"					OUT	"		"					IN	"	"		"		"		"	"
		153	IN	"				OUT		"		5.0 V						"	"		"		"		"	"
		154	IN	"					OUT	"		5.0 V						"	"		"		"		"	"

1/ Terminals not designated may be "HIGH" level logic, "LOW" level logic or open except as follows: $V_{IC(pos)}$ tests; the V_{SS} terminal shall be open. $V_{IC(neg)}$ tests; the V_{DD} terminal shall be open. I_{SS} test, the output terminal shall be open.

2/ The I_{SS} tests shall be performed in sequence.

3/ Apply a single clock pulse; V_{IN} = 0 V dc to V_{DD}.

4/ Apply clock pulse: V_{IH} = 0 V dc to V_{DD}, until proper output state is achieved.

5/ V_{IH} and V_{IL} tests are performed by repeating the truth table tests (numbers 115 through 135) using the input and output conditions as follows:

Test	V_{DD}	Input H	Input L	Output H	Output L
V_{IH1} V_{IL1}	5.0 V	3.5 V	1.5 V	4.5 V	0.5 V
V_{IH2} V_{IL2}	10.0 V	7.0 V	3.0 V	9.0 V	1.0 V
V_{IH3} V_{IL3}	15.0 V	11.0 V	4.0 V	13.5 V	1.5 V

6/ The device manufacturer may, at his option, measure I_{IL} and I_{IH} at 25°C for each indivdiual input or measure all inputs together.

7/ See 4.4.1c.

8/ Test numbers 115 through 135 shall be run in sequence.

9/ For all test conditions delayed clock (C_{LD}) is clock delayed by two inverters.

10/ The output voltage limits for each temperature are "H" = V_{DD} -0.5 V min and "L" = V_{SS} +0.5 V min.

11/ The functional test shall be performed at V_{IH} and V_{DD} ≤5.0 V dc and ≥18.0 V dc.

12/ Apply 59 clock pulses: V_{IN} = 0 V dc to V_{DD}, t_p = 500 ns (min) and t_{TLH} = t_{THL} = 10 ns ±10%.

13/ The maximum clock frequency (f_{CL}) requirement is considered met if proper output state changes occur with the pulse repetition period set to that given in the limits column.

TABLE III. Group A inspection for device type 56.

Symbol	MIL-STD-883-method	Cases J,K,U Symbol	Terminal conditions and limits 1/													
			B_8	B_7	B_6	B_5	B_4	B_3	B_2	B_1	AE	Serial In	A/B	V_{SS}	P/S	A/S
		Test no.	1	2	3	4	5	6	7	8	9	10	11	12	13	14
V_{IC} (pos)	2/	1									1 mA					
		2										1 mA				
		3											1 mA			
		4													1 mA	
		5														1 mA
		6														
V_{IC} (neg)		7									-1 mA			GND		
		8										-1 mA		"		
		9											-1 mA	"		
		10												"	-1 mA	
		11												"		-1 mA
		12												"		
I_{SS} 3/	3005	13									18.0 V	18.0 V	18.0 V	"	18.0 V	18.0 V
		14									"	GND	"	"	18.0 V	18.0 V
		15									"	"	"	"	18.0 V	GND
		16									"	"	"	"	GND	GND
		17									"	"	"	"	GND	18.0 V
		18									GND	"	"	"	GND	GND
		19									"	"	"	"	18.0 V	"
		20									"	"	GND	"	GND	"
		21									"	"	"	"	GND	"
		22	18.0 V	GND	18.0 V	GND	18.0 V	GND	18.0 V	GND	18.0 V	"	"	"	GND	"
		23	18.0 V	GND	18.0 V	GND	18.0 V	GND	18.0 V	GND	18.0 V	"	"	"	18.0 V	"
V_{OH3}	3006	24									15.0 V		15.0 V	"	15.0 V	"
		25									"		"	"	"	"
		26									"		"	"	"	"
		27									"		"	"	"	"
		28									"		"	"	"	"
		29									"		"	"	"	"
		30									"		"	"	"	"
		31									"		"	"	"	"
		32									"		GND	"	"	"
		33									"		"	"	"	"
		34									"		"	"	"	"
		35									"		"	"	"	"
		36									"		"	"	"	"
		37									"		"	"	"	"
		38									"		"	"	"	"
		39									"		"	"	"	"
		40									"		"	"	GND	"
V_{OL3}	3007	41									15.0 V		15.0 V	"	15.0 V	"
		42									"		"	"	"	"
		43									"		"	"	"	"
		44									"		"	"	"	"
		45									"		"	"	"	"
		46									"		"	"	"	"
		47									"		"	"	"	"
		48									"		"	"	"	"
		49									"		GND	"	"	"
		50									"		"	"	"	"
		51									"		"	"	"	"
		52									"		"	"	"	"
		53									"		"	"	"	"
		54									"		"	"	"	"
		55									"		"	"	"	"
		56									"		"	"	"	"
		57									"		"	"	GND	"

See footnotes at end of device type 56.

TABLE III. Group A inspection for device type 56 - Continued.

Cases J,K,U Symbol	Clock	A_1	A_2	A_3	A_4	A_5	A_6	A_7	A_8	V_{DD}	Measured terminal	Subgroup 1 T_C=25°C		Subgroup 2 T_C=125°C		Subgroup 3 T_C=-55°C		Unit
Test no.	15	16	17	18	19	20	21	22	23	24		Min	Max	Min	Max	Min	Max	
1																		
2										5.0 V	AE		1.5					V
3										"	Ser In		"					"
4										"	A/B		"					"
5										"	P/S		"					"
6	1 mA									"	A/S		"					"
										"	Clock		"					"
7																		
8											AE		-6					"
9											Ser In		"					"
10											A/B		"					"
11											P/S		"					"
12	-1 mA										A/S		"					"
											Clock		"					"
13	GND	GND	18.0 V	GND	18.0 V	GND	18.0 V	GND	18.0 V	18.0 V	V_{SS}		-1.0		-5.0			μA
14	18.0 V	18.0 V	GND	18.0 V	GND	18.0 V	GND	18.0 V	GND	"	V_{SS}		"		"			"
15	18.0 V	18.0 V	GND	18.0 V	GND	18.0 V	GND	18.0 V	GND	"	None		"		"			"
16	18.0 V	18.0 V	GND	18.0 V	GND	18.0 V	GND	18.0 V	GND	"	V_{SS}		"		"			"
17	GND	GND	18.0 V	GND	18.0 V	GND	18.0 V	GND	18.0 V	"	V_{SS}		"		"			"
18	"	"	"	"	"	"	"			"	None		"		"			"
19	"	"	"	"	"	"	"			"	V_{SS}		"		"			"
20	"	"	"	"	"	"	"			"	V_{SS}		"		"			"
21	"									"	None		"		"			"
22	"									"	V_{SS}		"		"			"
23	"									"	V_{SS}		"		"			"
24	4/																	
25	"									15.0 V	B_1	14.95		14.95		14.95		V
26	"									"	B_2	"		"		"		"
27	"									"	B_3	"		"		"		"
28	"									"	B_4	"		"		"		"
29	"									"	B_5	"		"		"		"
30	"									"	B_6	"		"		"		"
31	"									"	B_7	"		"		"		"
32	"									"	B_8	"		"		"		"
33	"									"	A_1	"		"		"		"
34	"									"	A_2	"		"		"		"
35	"									"	A_3	"		"		"		"
36	"									"	A_4	"		"		"		"
37	"									"	A_5	"		"		"		"
38	"									"	A_6	"		"		"		"
39	"									"	A_7	"		"		"		"
40	"									"	A_8	"		"		"		"
										"	A_1	"		"		"		"
41	"									"	B_1		.05		.05		.05	"
42	"									"	B_2		"		"		"	"
43	"									"	B_3		"		"		"	"
44	"									"	B_4		"		"		"	"
45	"									"	B_5		"		"		"	"
46	"									"	B_6		"		"		"	"
47	"									"	B_7		"		"		"	"
48	"									"	B_8		"		"		"	"
49	"									"	A_1		"		"		"	"
50	"									"	A_2		"		"		"	"
51	"									"	A_3		"		"		"	"
52	"									"	A_4		"		"		"	"
53	"									"	A_5		"		"		"	"
54	"									"	A_6		"		"		"	"
55	"									"	A_7		"		"		"	"
56	"									"	A_8		"		"		"	"
57	"									"	A_1		"		"		"	"

TABLE III. Group A inspection for device type 56 - Continued.

Symbol	MIL-STD-883-method	Cases J,K Symbol	Terminal conditions and limits 1/													
			B_8	B_7	B_6	B_5	B_4	B_3	B_2	B_1	AE	Serial In	A/B	I_{SS}	P/S	A/S
		Test no.	1	2	3	4	5	6	7	8	9	10	11	12	13	14
V_{IH1}		58	5/	5/	5/	5/	5/	5/	5/	5/	5/	5/	5/	GND	5/	5/
V_{IH2}		59	"	"	"	"	"	"	"	"	"	"	"	"	"	"
V_{IH3}		60	"	"	"	"	"	"	"	"	"	"	"	"	"	"
V_{IL1}		61	"	"	"	"	"	"	"	"	"	"	"	"	"	"
V_{IL2}		62	"	"	"	"	"	"	"	"	"	"	"	"	"	"
V_{IL3}		63	"	"	"	"	"	"	"	"	"	"	"	"	"	"
I_{CL1}		64								0.4 V	5.0 V		5.0 V	"	5.0 V	GND
		65							0.4 V		"		"	"	"	"
		66						0.4 V			"		"	"	"	"
		67					0.4 V				"		"	"	"	"
		68				0.4 V					"		"	"	"	"
		69			0.4 V						"		"	"	"	"
		70		0.4 V							"		"	"	"	"
		71	0.4 V								"		"	"	"	"
		72								GND	"		GND	"	"	"
		73							GND		"		"	"	"	"
		74						GND			"		"	"	"	"
		75					GND				"		"	"	"	"
		76				GND					"		"	"	"	"
		77			GND						"		"	"	"	"
		78		GND							"		"	"	"	"
		79	GND								"		"	"	"	"
		80									"	GND	"	"	GND	"
I_{OL2}		81								1.5 V	15.0 V		15.0 V	"	15.0 V	"
		82							1.5 V		"		"	"	"	"
		83						1.5 V			"		"	"	"	"
		84					1.5 V				"		"	"	"	"
		85				1.5 V					"		"	"	"	"
		86			1.5 V						"		"	"	"	"
		87		1.5 V							"		"	"	"	"
		88	1.5 V								"		"	"	"	"
		89								GND	"		GND	"	"	"
		90							GND		"		"	"	"	"
		91						GND			"		"	"	"	"
		92					GND				"		"	"	"	"
		93				GND					"		"	"	"	"
		94			GND						"		"	"	"	"
		95		GND							"		"	"	"	"
		96	GND								"		"	"	"	"
		97									"	GND	"	"	GND	"
I_{OH1}		98								4.6 V	5.0 V		5.0 V	"	5.0 V	"
		99							4.6 V		"		"	"	"	"
		100						4.6 V			"		"	"	"	"
		101					4.6 V				"		"	"	"	"
		102				4.6 V					"		"	"	"	"
		103			4.6 V						"		"	"	"	"
		104		4.6 V							"		"	"	"	"
		105	4.6 V								"		"	"	"	"
		106								5.0 V	"		GND	"	"	"
		107							5.0 V		"		"	"	"	"
		108						5.0 V			"		"	"	"	"
		109					5.0 V				"		"	"	"	"
		110				5.0 V					"		"	"	"	"
		111			5.0 V						"		"	"	"	"
		112		5.0 V							"		"	"	"	"
		113	5.0 V								"		"	"	"	"
		114									"	5.0 V	"	"	GND	"

See footnotes at end of device type 56.

TABLE III. Group A inspection for device type 56 - Continued.

Cases J,K Symbol	Clock	A_1	A_2	A_3	A_4	A_5	A_6	A_7	A_8	V_{DD}	Measured terminal	Subgroup 1 T_C=25°C Min	Subgroup 1 T_C=25°C Max	Subgroup 2 T_C=125°C Min	Subgroup 2 T_C=125°C Max	Subgroup 3 T_C=-55°C Min	Subgroup 3 T_C=-55°C Max	Unit
Test no.	15	16	17	18	19	20	21	22	23	24								
58	5/	5/	5/	5/	5/	5/	5	5/	5/	5/	All outputs	5/	5/	5/	5/	5/	5/	5/
59	"	"	"	"	"	"	"	"	"	"	"	"	"	"	"	"	"	"
60	"	"	"	"	"	"	"	"	"	"	"	"	"	"	"	"	"	"
61	"	"	"	"	"	"	"	"	"	"	"	"	"	"	"	"	"	"
62	"	"	"	"	"	"	"	"	"	"	"	"	"	"	"	"	"	"
63	"	"	"	"	"	"	"	"	"	"	"	"	"	"	"	"	"	"
64	4/	GND																
65	"		GND							5.0 V	B_1	0.51		0.36		0.64		mA
66	"			GND						"	B_2	"		"		"		"
67	"				GND					"	B_3	"		"		"		"
68	"					GND				"	B_4	"		"		"		"
69	"						GND			"	B_5	"		"		"		"
70	"							GND		"	B_6	"		"		"		"
71	"	0.4 V							GND	"	B_7	"		"		"		"
72	"		0.4 V							"	B_8	"		"		"		"
73	"			0.4 V						"	A_1	"		"		"		"
74	"				0.4 V					"	A_2	"		"		"		"
75	"					0.4 V				"	A_3	"		"		"		"
76	"						0.4 V			"	A_4	"		"		"		"
77	"							0.4 V		"	A_5	"		"		"		"
78	"								0.4 V	"	A_6	"		"		"		"
79	"	0.4 V								"	A_7	"		"		"		"
80	"									"	A_8	"		"		"		"
81	"	GND									A_1	"		"		"		"
82	"		GND							15.0 V	B_1	3.4		2.4		2.2		"
83	"			GND						"	B_2	"		"		"		"
84	"				GND					"	B_3	"		"		"		"
85	"					GND				"	B_4	"		"		"		"
86	"						GND			"	B_5	"		"		"		"
87	"							GND		"	B_6	"		"		"		"
88	"	1.5 V							GND	"	B_7	"		"		"		"
89	"		1.5 V							"	B_8	"		"		"		"
90	"			1.5 V						"	A_1	"		"		"		"
91	"				1.5 V					"	A_2	"		"		"		"
92	"					1.5 V				"	A_3	"		"		"		"
93	"						1.5 V			"	A_4	"		"		"		"
94	"							1.5 V		"	A_5	"		"		"		"
95	"								1.5 V	"	A_6	"		"		"		"
96	"	1.5 V								"	A_7	"		"		"		"
97	"									"	A_8	"		"		"		"
98	"	5.0 V									A_1	"		"		"		"
99	"		5.0 V							5.0 V	B_1	-.51		-.36		-.64		"
100	"			5.0 V						"	B_2	"		"		"		"
101	"				5.0 V					"	B_3	"		"		"		"
102	"					5.0 V				"	B_4	"		"		"		"
103	"						5.0 V			"	B_5	"		"		"		"
104	"							5.0 V		"	B_6	"		"		"		"
105	"	4.6 V							5.0 V	"	B_7	"		"		"		"
106	"		4.6 V							"	B_8	"		"		"		"
107	"			4.6 V						"	A_1	"		"		"		"
108	"				4.6 V					"	A_2	"		"		"		"
109	"					4.6 V				"	A_3	"		"		"		"
110	"						4.6 V			"	A_4	"		"		"		"
111	"							4.6 V		"	A_5	"		"		"		"
112	"								4.6 V	"	A_6	"		"		"		"
113	"	4.6 V								"	A_7	"		"		"		"
114	"									"	A_8	"		"		"		"
											A_1	"		"		"		"

TABLE III. Group A inspection for device type 56 - Continued.

Symbol	MIL-STD-883-method	Cases J,K,U Symbol Test no.	Terminal conditions and limits 1/ B_8 1	B_7 2	B_6 3	B_5 4	B_4 5	B_3 6	B_2 7	B_1 8	AE 9	Serial In 10	A/B 11	V_{SS} 12	P/S 13	A/S 14
I_{OH2}		115								13.5 V	15.0 V		15.0 V	GND	15.0 V	GND
		116							13.5 V		"		"	"	"	"
		117						13.5 V			"		"	"	"	"
		118					13.5 V				"		"	"	"	"
		119				13.5 V					"		"	"	"	"
		120			13.5 V						"		"	"	"	"
		121		13.5 V							"		"	"	"	"
		122	13.5 V								"		"	"	"	"
		123								15.0 V	"		GND	"	"	"
		124							15.0 V		"		"	"	"	"
		125						15.0 V			"		"	"	"	"
		126					15.0 V				"		"	"	"	"
		127				15.0 V					"		"	"	"	"
		128			15.0 V						"		"	"	"	"
		129		15.0 V							"		"	"	"	"
		130	15.0 V								"		"	"	"	"
		131									"	15.0 V	"	"	GND	"
I_{IH1} 6/	3010	132									18.0 V	18.0 V	18.0 V	"	18.0 V	18.0 V
		133	18.0 V	18.0 V	18.0 V	18.0 V	18.0 V	18.0 V	18.0 V	18.0 V	GND	18.0 V	GND	"	18.0 V	18.0 V
I_{IH2}		134	18.0 V	GND	GND	GND	GND	GND	GND	GND	GND	GND	GND	"	GND	GND
		135	GND	18.0 V	GND	GND	"	"	"	"	"	"	"	"	"	"
		136	"	GND	18.0 V	GND	"	"	"	"	"	"	"	"	"	"
		137	"	"	GND	18.0 V	"	"	"	"	"	"	"	"	"	"
		138	"	"	"	GND	18.0 V	"	"	"	"	"	"	"	"	"
		139	"	"	"	"	GND	18.0 V	"	"	"	"	"	"	"	"
		140	"	"	"	"	"	GND	18.0 V	"	"	"	"	"	"	"
		141	"	"	"	"	"	"	GND	18.0 V	"	"	"	"	"	"
		142	"	"	"	"	"	"	"	GND	18.0 V	"	"	"	"	"
		143	"	"	"	"	"	"	"	GND	GND	18.0 V	"	"	"	"
		144	"	"	"	"	"	"	"	"	"	GND	18.0 V	"	"	"
		145	"	"	"	"	"	"	"	"	"	"	GND	"	18.0 V	"
		146	"	"	"	"	"	"	"	"	"	"	"	"	GND	18.0 V
		147	"	"	"	"	"	"	"	"	"	"	"	"	"	GND
		148	"	"	"	"	"	"	"	"	"	"	"	"	"	"
		149	"	"	"	"	"	"	"	"	"	"	"	"	"	"
		150	"	"	"	"	"	"	"	"	"	"	"	"	"	"
		151	"	"	"	"	"	"	"	"	"	"	"	"	"	"
		152	"	"	"	"	"	"	"	"	"	"	"	"	"	"
		153	"	"	"	"	"	"	"	"	"	"	"	"	"	"
		154	"	"	"	"	"	"	"	"	"	"	"	"	"	"
		155	"	"	"	"	"	"	"	"	"	"	"	"	"	"
I_{IL1} 6/	3009	156	"	"	"	"	"	"	"	"	"	"	"	"	"	"
I_{IL2}		157	"	"	"	"	"	"	"	"	"	"	"	"	"	"
		158	"	"	"	"	"	"	"	"	"	"	"	"	"	"
		159	"	"	"	"	"	"	"	"	"	"	"	"	"	"
		160	"	"	"	"	"	"	"	"	"	"	"	"	"	"
		161	"	"	"	"	"	"	"	"	"	"	"	"	"	"
		162	"	"	"	"	"	"	"	"	"	"	"	"	"	"
		163	"	"	"	"	"	"	"	"	"	"	"	"	"	"
		164	"	"	"	"	"	"	"	"	"	"	"	"	"	"
		165	"	"	"	"	"	"	"	"	"	"	"	"	"	"
		166	"	"	"	"	"	"	"	"	"	"	"	"	"	"
		167	"	"	"	"	"	"	"	"	"	"	"	"	"	"
		168	"	"	"	"	"	"	"	"	"	"	"	"	"	"

See footnotes at end of device type 55.

TABLE III. Group A inspection for device type 56 - Continued.

Cases J,K,U												Subgroup 1 T_C=25°C		Subgroup 2 T_C=125°C		Subgroup 3 T_C=-55°C		
Symbol	Clock	A_1	A_2	A_3	A_4	A_5	A_6	A_7	A_8	V_{DD}	Measured terminal	Min	Max	Min	Max	Min	Max	Unit
Test no.	15	16	17	18	19	20	21	22	23	24								
115	4/	15.0 V																
116	"		15.0 V							15.0 V	B_1	-3.4		-2.4		-4.2		mA
117	"			15.0 V						"	B_2	"		"		"		"
118	"				15.0 V					"	B_3	"		"		"		"
119	"					15.0 V				"	B_4	"		"		"		"
120	"						15.0 V			"	B_5	"		"		"		"
121	"							15.0 V		"	B_6	"		"		"		"
122	"	13.5 V							15.0 V	"	B_7	"		"		"		"
123	"		13.5 V							"	B_8	"		"		"		"
124	"			13.5 V						"	A_1	"		"		"		"
125	"				13.5 V					"	A_2	"		"		"		"
126	"					13.5 V				"	A_3	"		"		"		"
127	"						13.5 V			"	A_4	"		"		"		"
128	"							13.5 V		"	A_5	"		"		"		"
129	"								13.5 V	"	A_6	"		"		"		"
130	"	13.5 V								"	A_7	"		"		"		"
131	"									"	A_8	"		"		"		"
											A_1	"		"		"		"
132	18.0 V	18.0 V	18.0 V	18.0 V	18.0 V	18.0 V	18.0 V	18.0 V	18.0 V	18.0 V	All HIGH level inputs together		14					nA
133	18.0 V									"			12					"
134	GND	GND	GND	GND	GND	GND	GND	GND	GND	18.0 V	B_8		1.0		45			"
135	"	"	"	"	"	"	"	"	"	"	B_7		"		"			"
136	"	"	"	"	"	"	"	"	"	"	B_6		"		"			"
137	"	"	"	"	"	"	"	"	"	"	B_5		"		"			"
138	"	"	"	"	"	"	"	"	"	"	B_4		"		"			"
139	"	"	"	"	"	"	"	"	"	"	B_3		"		"			"
140	"	"	"	"	"	"	"	"	"	"	B_2		"		"			"
141	"	"	"	"	"	"	"	"	"	"	B_1		"		"			"
142	"	"	"	"	"	"	"	"	"	"	AE		"		"			"
143	"	"	"	"	"	"	"	"	"	"	Serial In		"		"			"
144	"	"	"	"	"	"	"	"	"	"	A/B		"		"			"
145	"	"	"	"	"	"	"	"	"	"	P/S		"		"			"
146	"	"	"	"	"	"	"	"	"	"	A/S		"		"			"
147	18.0 V	"	"	"	"	"	"	"	"	"	Clock		"		"			"
148	GND	18.0 V	"	"	"	"	"	"	"	"	A_1		"		"			"
149	"	GND	18.0 V	"	"	"	"	"	"	"	A_2		"		"			"
150	"	"	GND	18.0 V	"	"	"	"	"	"	A_3		"		"			"
151	"	"	"	GND	18.0 V	"	"	"	"	"	A_4		"		"			"
152	"	"	"	"	GND	18.0 V	"	"	"	"	A_5		"		"			"
153	"	"	"	"	"	GND	18.0 V	"	"	"	A_6		"		"			"
154	"	"	"	"	"	"	GND	18.0 V	"	"	A_7		"		"			"
155	"	"	"	"	"	"	"	GND	18.0 V	"	A_8		"		"			"
156	"	"	"	"	"	"	"	"	"	"	All inputs together		-22					"
157	"	"	"	"	"	"	"	"	"	"	B_8		-1.0		-45			"
158	"	"	"	"	"	"	"	"	"	"	B_7		"		"			"
159	"	"	"	"	"	"	"	"	"	"	B_6		"		"			"
160	"	"	"	"	"	"	"	"	"	"	B_5		"		"			"
161	"	"	"	"	"	"	"	"	"	"	B_4		"		"			"
162	"	"	"	"	"	"	"	"	"	"	B_3		"		"			"
163	"	"	"	"	"	"	"	"	"	"	B_2		"		"			"
164	"	"	"	"	"	"	"	"	"	"	B_1		"		"			"
165	"	"	"	"	"	"	"	"	"	"	AE		"		"			"
166	"	"	"	"	"	"	"	"	"	"	Serial In		"		"			"
167	"	"	"	"	"	"	"	"	"	"	A/B		"		"			"
168	"	"	"	"	"	"	"	"	"	"	P/S		"		"			"

TABLE III. Group A inspection for device type 56 - Continued.

Symbol	MIL-STD-883-method	Cases J,K,U Symbol	Terminal conditions and limits 1/													
			B_8	B_7	B_6	B_5	B_4	B_3	B_2	B_1	AE	Serial In	A/B	V_{SS}	P/S	A/S
		Test no.	1	2	3	4	5	6	7	8	9	10	11	12	13	14
I_{IL2}	3009	169	GND	GND	GND	GND	GND	GND	GND	GND	GND	GND	GND	GND	GND	GND
		170	"	"	"	"	"	"	"	"	"	"	"	"	"	"
		171	"	"	"	"	"	"	"	"	"	"	"	"	"	"
		172	"	"	"	"	"	"	"	"	"	"	"	"	"	"
		173	"	"	"	"	"	"	"	"	"	"	"	"	"	"
		174	"	"	"	"	"	"	"	"	"	"	"	"	"	"
		175	"	"	"	"	"	"	"	"	"	"	"	"	"	"
		176	"	"	"	"	"	"	"	"	"	"	"	"	"	"
		177	"	"	"	"	"	"	"	"	"	"	"	"	"	"
		178	"	"	"	"	"	"	"	"	"	"	"	"	"	"
C_i	3012	179									7/	7/		GND		
		180												"		
		181											7/	"		
		182												"	7/	
		183												"		7/
		184												"		
Truth table test 8/	3014	185									5.0 V	GND	5.0 V	GND	5.0 V	GND
		186	L	H	L	H	L	H	L	H	5.0 V	"	"	"	5.0 V	"
		187	"	"	"	"	"	"	"	"	GND	"	"	"	GND	"
		188	"	"	"	"	"	"	"	"	5.0 V	"	"	"	"	"
		189	"	"	"	"	"	"	"	"	"	"	"	"	"	"
		190	H	L	H	L	H	L	H	L	"	"	"	"	"	"
		191	"	"	"	"	"	"	"	"	"	"	"	"	5.0 V	"
		192	"	"	"	"	"	"	"	"	"	5.0 V	"	"	GND	"
		193	"	"	"	"	"	"	"	"	"	"	"	"	GND	"
		194	L	H	L	H	L	H	L	H	"	"	"	"	GND	"
		195	H	L	H	L	H	L	H	L	"	"	"	"	5.0 V	5.0 V
		196	L	H	H	H	L	H	L	H	"	GND	"	"	"	"
		197	L	H	L	H	L	H	L	H	GND	GND	"	"	"	"
		198	L	H	L	H	L	H	L	H			"	"	"	"
		199									GND	GND	5.0 V	"	GND	"
		200	GND	5.0 V	GND	5.0 V	GND	5.0 V	GND	5.0 V	GND	GND	GND	"	5.0 V	"
		201	5.0 V	GND	5.0 V	GND	5.0 V	GND	5.0 V	GND	5.0 V	GND	"	"	"	"
		202	5.0 V	GND	5.0 V	GND	5.0 V	GND	5.0 V	GND	"	5.0 V	"	"	"	GND
		203	GND	5.0 V	GND	5.0 V	GND	5.0 V	GND	5.0 V	"	"	"	"	"	GND
		204	"	"	"	"	"	"	"	"	"	"	"	"	GND	GND
		205	"	"	"	"	"	"	"	"	"	"	"	"	GND	5.0 V
		206	"	"	"	"	"	"	"	"	"	"	"	"	5.0 V	GND
		207	"	"	"	"	"	"	"	"	"	"	"	"	"	"
		208	5.0 V	GND	5.0 V	GND	5.0 V	GND	5.0 V	GND	"	"	"	"	"	"
		209	"	"	"	"	"	"	"	"	"	"	"	"	"	"
		210	"	"	"	"	"	"	"	"	"	"	"	"	GND	"
		211	"	"	"	"	"	"	"	"	"	"	"	"	GND	"
t_{PHL1}	3003 Fig.11	212								OUT	5.0 V		5.0 V	GND	5.0 V	GND
		213							OUT		"		"	"	"	"
		214						OUT			"		"	"	"	"
		215					OUT				"		"	"	"	"

See footnotes at end of device type 56.

TABLE III. Group A inspection for device type 56 - Continued.

Cases J,K,U Symbol	Clock	A_1	A_2	A_3	A_4	A_5	A_6	A_7	A_8	V_{DD}	Measured terminal	Subgroup 1 T_C=25°C Min	Subgroup 1 T_C=25°C Max	Subgroup 2 T_C=125°C Min	Subgroup 2 T_C=125°C Max	Subgroup 3 T_C=-55°C Min	Subgroup 3 T_C=-55°C Max	Unit
Test no.	15	16	17	18	19	20	21	22	23	24								
169	GND	GND	GND	GND	GND	GND	GND	GND	GND	18.0 V	A/S		-1.0		-45			nA
170	"	"	"	"	"	"	"	"	"	"	Clock		"		"			"
171	"	"	"	"	"	"	"	"	"	"	A_1		"		"			"
172	"	"	"	"	"	"	"	"	"	"	A_2		"		"			"
173	"	"	"	"	"	"	"	"	"	"	A_3		"		"			"
174	"	"	"	"	"	"	"	"	"	"	A_4		"		"			"
175	"	"	"	"	"	"	"	"	"	"	A_5		"		"			"
176	"	"	"	"	"	"	"	"	"	"	A_6		"		"			"
177	"	"	"	"	"	"	"	"	"	"	A_7		"		"			"
178	"	"	"	"	"	"	"	"	"	"	A_8		"		"			"
												Subgroup 4 T_C=25°C Min	Subgroup 4 T_C=25°C Max					
179										GND	AE		12					pF
180										"	Serial In		"					"
181										"	A/B		"					"
182										"	P/S		"					"
183										"	A/S		"					"
184	7/									"	Clock		"					"
												Subgroup 7 T_C=25°C Min	Subgroup 7 T_C=25°C Max	Subgroup 8 T_C=125°C Min	Subgroup 8 T_C=125°C Max	Subgroup 8 T_C=-55°C Min	Subgroup 8 T_C=-55°C Max	
185	GND	5.0 V	GND	5.0 V	GND	5.0 V	GND	5.0 V	GND	5.0 V	All outputs	8/, 9/						
186	5.0 V	"	"	"	"	"	"	"	"	"	"							
187	5.0 V	"	"	"	"	"	"	"	"	"	"							
188	5.0 V	"	"	"	"	"	"	"	"	"	"							
189	GND	"	"	"	"	"	"	"	"	"	"							
190	5.0 V	"	"	"	"	"	"	"	"	"	"							
191	5.0 V	"	"	"	"	"	"	"	"	"	"							
192	5.0 V	GND	5.0 V	GND	5.0 V	GND	5.0 V	GND	5.0 V	"	"							
193	GND	"	"	"	"	"	"	"	"	"	"							
194	"	"	"	"	"	"	"	"	"	"	"							
195	"	"	"	"	"	"	"	"	"	"	"							
196	"	5.0 V	GND	5.0 V	GND	5.0 V	GND	5.0 V	GND	"	"							
197	"	5.0 V	GND	5.0 V	GND	5.0 V	GND	5.0 V	GND	"	"							
198	5.0 V	GND	5.0 V	GND	5.0 V	GND	5.0 V	GND	5.0 V	"	"							
199	GND									"	"							
200	"	H	L	H	L	H	L	H	L	"	"							
201	"	L	H	L	H	L	H	L	H	"	"							
202	"	"	"	"	"	"	"	"	"	"	"							
203	"	"	"	"	"	"	"	"	"	"	"							
204	"	"	"	"	"	"	"	"	"	"	"							
205	"	"	"	"	"	"	"	"	"	"	"							
206	"	H	L	H	L	H	L	H	L	"	"							
207	"	H	L	H	L	H	L	H	L	"	"							
208	"	H	L	H	L	H	L	H	L	"	"							
209	5.0 V	L	H	L	H	L	H	L	H	"	"							
210	GND	L	H	L	H	L	H	L	H	"	"							
211	5.0 V	H	L	H	L	H	L	H	L	"	"							
												Subgroup 9 T_C=25°C Min	Subgroup 9 T_C=25°C Max	Subgroup 10 T_C=125°C Min	Subgroup 10 T_C=125°C Max	Subgroup 11 T_C=-55°C Min	Subgroup 11 T_C=-55°C Max	
212	IN	IN								5.0 V	Clock to B_1	13	737	18	980	13	737	ns
213	"		IN							"	Clock to B_2	"	"	"	"	"	"	"
214	"			IN						"	Clock to B_3	"	"	"	"	"	"	"
215	"				IN					"	Clock to B_4	"	"	"	"	"	"	"

TABLE III. Group A inspection for device type 56 - Continued.

Symbol	MIL-STD-883-method	Cases J,K,U Symbol	Terminal conditions and limits 1/													
			B_8	B_7	B_6	B_5	B_4	B_3	B_2	B_1	AE	Serial In	A/B	V_{SS}	P/S	A/S
		Test no.	1	2	3	4	5	6	7	8	9	10	11	12	13	14
t_{PHL1}	3003 Fig.11	216				OUT					5.0 V		5.0 V	GND	5.0 V	GND
		217			OUT						"		"	"	"	"
		218		OUT							"		"	"	"	"
		219	OUT								"		"	"	"	"
t_{PLH1}		220								OUT	"		GND	"	"	"
		221							OUT		"		"	"	"	"
		222						OUT			"		"	"	"	"
		223					OUT				"		"	"	"	"
		224				OUT					"		"	"	"	"
		225			OUT						"		"	"	"	"
		226		OUT							"		"	"	"	"
		227	OUT								"		"	"	"	"
t_{PHL2}		228								OUT	"		"	"	"	"
		229							OUT		"		"	"	"	"
		230						OUT			"		"	"	"	"
		231					OUT				"		"	"	"	"
		232				OUT					"		"	"	"	"
		233			OUT						"		"	"	"	"
		234		OUT							"		"	"	"	"
		235	OUT								"		"	"	"	"
t_{PLH2}		236								IN	"		"	"	"	"
		237							IN		"		"	"	"	"
		238						IN			"		"	"	"	"
		239					IN				"		"	"	"	"
		240				IN					"		"	"	"	"
		241			IN						"		"	"	"	"
		242		IN							"		"	"	"	"
		243	IN								"		"	"	"	"

See footnotes at end of device type 56.

TABLE III. Group A inspection for device type 56 - Continued.

Cases J,K,U Symbol	Clock	A_1	A_2	A_3	A_4	A_5	A_6	A_7	A_8	V_{DD}	Measured terminal	Subgroup 9 T_C=25°C		Subgroup 10 T_C=125°C		Subgroup 11 T_C=-55°C		Unit
Test no.	15	16	17	18	19	20	21	22	23	24		Min	Max	Min	Max	Min	Max	
216	IN					IN				5.0 V	Clock to B_5	13	737	18	980	13	737	ns
217	"						IN			"	Clock to B_6	"	"	"	"	"	"	"
218	"							IN		"	Clock to B_7	"	"	"	"	"	"	"
219	"								IN	"	Clock to B_8	"	"	"	"	"	"	"
220	"	IN								"	Clock to B_1	"	"	"	"	"	"	"
221	"		IN							"	Clock to B_2	"	"	"	"	"	"	"
222	"			IN						"	Clock to B_3	"	"	"	"	"	"	"
223	"				IN					"	Clock to B_4	"	"	"	"	"	"	"
224	"					IN				"	Clock to B_5	"	"	"	"	"	"	"
225	"						IN			"	Clock to B_6	"	"	"	"	"	"	"
226	"							IN		"	Clock to B_7	"	"	"	"	"	"	"
227	"								IN	"	Clock to B_8	"	"	"	"	"	"	"
228	"	IN								"	Clock to B_1	"	"	"	"	"	"	"
229	"		IN							"	Clock to B_2	"	"	"	"	"	"	"
230	"			IN						"	Clock to B_3	"	"	"	"	"	"	"
231	"				IN					"	Clock to B_4	"	"	"	"	"	"	"
232	"					IN				"	Clock to B_5	"	"	"	"	"	"	"
233	"						IN			"	Clock to B_6	"	"	"	"	"	"	"
234	"							IN		"	Clock to B_7	"	"	"	"	"	"	"
235	"								IN	"	Clock to B_8	"	"	"	"	"	"	"
236	"	OUT								"	Clock to A_1	"	"	"	"	"	"	"
237	"		OUT							"	Clock to A_2	"	"	"	"	"	"	"
238	"			OUT						"	Clock to A_3	"	"	"	"	"	"	"
239	"				OUT					"	Clock to A_4	"	"	"	"	"	"	"
240	"					OUT				"	Clock to A_5	"	"	"	"	"	"	"
241	"						OUT			"	Clock to A_6	"	"	"	"	"	"	"
242	"							OUT		"	Clock to A_7	"	"	"	"	"	"	"
243	"								OUT	"	Clock to A_8	"	"	"	"	"	"	"

TABLE III. Group A inspection for device type 56 - Continued.

Symbol	MIL-STD-883-method	Cases J,K,U Symbol	Terminal conditions and limits 1/													
			B_8	B_7	B_6	B_5	B_4	B_3	B_2	B_1	AE	Serial In	A/B	V_{SS}	P/S	A/S
		Test no.	1	2	3	4	5	6	7	8	9	10	11	12	13	14
t_{PHL3}	3003 Fig. 11	244								OUT	5.0 V	IN	5.0 V	GND	GND	GND
		245							OUT		"	"	"	"	"	"
		246						OUT			"	"	"	"	"	"
		247					OUT				"	"	"	"	"	"
		248				OUT					"	"	"	"	"	"
		249			OUT						"	"	"	"	"	"
		250		OUT							"	"	"	"	"	"
		251	OUT								"	"	"	"	"	"
t_{PLH3}		252								OUT	"	"	"	"	"	"
		253							OUT		"	"	"	"	"	"
		254						OUT			"	"	"	"	"	"
		255					OUT				"	"	"	"	"	"
		256				OUT					"	"	"	"	"	"
		257			OUT						"	"	"	"	"	"
		258		OUT							"	"	"	"	"	"
		259	OUT								"	"	"	"	"	"
t_{PHL4}		260									"	"	GND	"	"	"
		261									"	"	"	"	"	"
		262									"	"	"	"	"	"
		263									"	"	"	"	"	"
		264									"	"	"	"	"	"
		265									"	"	"	"	"	"
		266									"	"	"	"	"	"
		267									"	"	"	"	"	"
t_{PLH4}		268									"	"	"	"	"	"
		269									"	"	"	"	"	"
		270									"	"	"	"	"	"
		271									"	"	"	"	"	"
		272									"	"	"	"	"	"
		273									"	"	"	"	"	"
		274									"	"	"	"	"	"
		275									"	"	"	"	"	"

See footnotes at end of table for device type 56.

TABLE III. Group A inspection for device type 56 - Continued.

Cases J,K,U												Subgroup 9 T_C=25°C		Subgroup 10 T_C=125°C		Subgroup 11 T_C=-55°C		Unit
Symbol	Clock	A_1	A_2	A_3	A_4	A_5	A_6	A_7	A_8	V_{DD}	Measured terminal	Min	Max	Min	Max	Min	Max	
Test no.	15	16	17	18	19	20	21	22	23	24								
244	IN									5.0 V	Clock to B_1	13	737	18	980	13	737	ns
245	"									"	Clock to B_2	"	"	"	"	"	"	"
246	"									"	Clock to B_3	"	"	"	"	"	"	"
247	"									"	Clock to B_4	"	"	"	"	"	"	"
248	"									"	Clock to B_5	"	"	"	"	"	"	"
249	"									"	Clock to B_6	"	"	"	"	"	"	"
250	"									"	Clock to B_7	"	"	"	"	"	"	"
251	"									"	Clock to B_8	"	"	"	"	"	"	"
252	"									"	Clock to B_1	"	"	"	"	"	"	"
253	"									"	Clock to B_2	"	"	"	"	"	"	"
254	"									"	Clock to B_3	"	"	"	"	"	"	"
255	"									"	Clock to B_4	"	"	"	"	"	"	"
256	"									"	Clock to B_5	"	"	"	"	"	"	"
257	"									"	Clock to B_6	"	"	"	"	"	"	"
258	"									"	Clock to B_7	"	"	"	"	"	"	"
259	"									"	Clock to B_8	"	"	"	"	"	"	"
260	"	OUT								"	Clock to A_1	"	"	"	"	"	"	"
261	"		OUT							"	Clock to A_2	"	"	"	"	"	"	"
262	"			OUT						"	Clock to A_3	"	"	"	"	"	"	"
263	"				OUT					"	Clock to A_4	"	"	"	"	"	"	"
264	"					OUT				"	Clock to A_5	"	"	"	"	"	"	"
265	"						OUT			"	Clock to A_6	"	"	"	"	"	"	"
266	"							OUT		"	Clock to A_7	"	"	"	"	"	"	"
267	"								OUT	"	Clock to A_8	"	"	"	"	"	"	"
268	"	OUT								"	Clock to A_1	"	"	"	"	"	"	"
269	"		OUT							"	Clock to A_2	"	"	"	"	"	"	"
270	"			OUT						"	Clock to A_3	"	"	"	"	"	"	"
271	"				OUT					"	Clock to A_4	"	"	"	"	"	"	"
272	"					OUT				"	Clock to A_5	"	"	"	"	"	"	"
273	"						OUT			"	Clock to A_6	"	"	"	"	"	"	"
274	"							OUT		"	Clock to A_7	"	"	"	"	"	"	"
275	"								OUT	"	Clock to A_8	"	"	"	"	"	"	"

TABLE III. Group A inspection for device type 56 - Continued.

Symbol	MIL-STD-883-method	Cases J,K,U Symbol	Terminal conditions and limits 1/													
			B_8	B_7	B_6	B_5	B_4	B_3	B_2	B_1	AE	Serial In	A/B	V_{SS}	P/S	A/S
		Test no.	1	2	3	4	5	6	7	8	9	10	11	12	13	14
t_{THL1}	3004 Fig.11	276								OUT	5.0 V		5.0 V	GND	5.0 V	GND
		277							OUT		"		"	"	"	"
		278						OUT			"		"	"	"	"
		279					OUT				"		"	"	"	"
		280				OUT					"		"	"	"	"
		281			OUT						"		"	"	"	"
		282		OUT							"		"	"	"	"
		283	OUT								"		"	"	"	"
t_{TLH1}		284								OUT	"		"	"	"	"
		285							OUT		"		"	"	"	"
		286						OUT			"		"	"	"	"
		287					OUT				"		"	"	"	"
		288				OUT					"		"	"	"	"
		289			OUT						"		"	"	"	"
		290		OUT							"		"	"	"	"
		291	OUT								"		"	"	"	"
t_{THL2}		292								IN	"		GND	"	"	"
		293							IN		"		"	"	"	"
		294						IN			"		"	"	"	"
		295					IN				"		"	"	"	"
		296				IN					"		"	"	"	"
		297			IN						"		"	"	"	"
		298		IN							"		"	"	"	"
		299	IN								"		"	"	"	"
t_{TLH2}		300								IN	"		"	"	"	"
		301							IN		"		"	"	"	"
		302						IN			"		"	"	"	"
		303					IN				"		"	"	"	"
		304				IN					"		"	"	"	"
		305			IN						"		"	"	"	"
		306		IN							"		"	"	"	"
		307	IN								"		"	"	"	"
t_{CL} 10/		308									"	IN	"	"	GND	"
		309									"	"	"	"	"	"
		310									"	"	"	"	"	"
		311									"	"	"	"	"	"
		312									"	"	"	"	"	"
		313									"	"	"	"	"	"
		314									"	"	"	"	"	"
		315									"	"	"	"	"	"
		316								OUT	"	"	5.0 V	"	"	"
		317							OUT		"	"	"	"	"	"
		318						OUT			"	"	"	"	"	"
		319					OUT				"	"	"	"	"	"
		320				OUT					"	"	"	"	"	"
		321			OUT						"	"	"	"	"	"
		322		OUT							"	"	"	"	"	"
		323	OUT								"	"	"	"	"	"

See footnotes at end of table.

TABLE III. Group A inspection for device type 56 - Continued.

Cases J,K,U Symbol	Clock	A_1	A_2	A_3	A_4	A_5	A_6	A_7	A_8	V_{DD}	Measured terminal	Subgroup 9 T_C=25°C		Subgroup 10 T_C=125°C		Subgroup 11 T_C=-55°C		Unit
Test no.	15	16	17	18	19	20	21	22	23	24		Min	Max	Min	Max	Min	Max	
276	IN	IN								5.0 V	B_1	10	210	14	280	10	210	ns
277	"		IN							"	B_2	"	"	"	"	"	"	"
278	"			IN						"	B_3	"	"	"	"	"	"	"
279	"				IN					"	B_4	"	"	"	"	"	"	"
280	"					IN				"	B_5	"	"	"	"	"	"	"
281	"						IN			"	B_6	"	"	"	"	"	"	"
282	"							IN		"	B_7	"	"	"	"	"	"	"
283	"								IN	"	B_8	"	"	"	"	"	"	"
284	"	IN								"	B_1	"	"	"	"	"	"	"
285	"		IN							"	B_2	"	"	"	"	"	"	"
286	"			IN						"	B_3	"	"	"	"	"	"	"
287	"				IN					"	B_4	"	"	"	"	"	"	"
288	"					IN				"	B_5	"	"	"	"	"	"	"
289	"						IN			"	B_6	"	"	"	"	"	"	"
290	"							IN		"	B_7	"	"	"	"	"	"	"
291	"								IN	"	B_8	"	"	"	"	"	"	"
292	"	OUT								"	A_1	"	"	"	"	"	"	"
293	"		OUT							"	A_2	"	"	"	"	"	"	"
294	"			OUT						"	A_3	"	"	"	"	"	"	"
295	"				OUT					"	A_4	"	"	"	"	"	"	"
296	"					OUT				"	A_5	"	"	"	"	"	"	"
297	"						OUT			"	A_6	"	"	"	"	"	"	"
298	"							OUT		"	A_7	"	"	"	"	"	"	"
299	"								OUT	"	A_8	"	"	"	"	"	"	"
300	"	OUT								"	A_1	"	"	"	"	"	"	"
301	"		OUT							"	A_2	"	"	"	"	"	"	"
302	"			OUT						"	A_3	"	"	"	"	"	"	"
303	"				OUT					"	A_4	"	"	"	"	"	"	"
304	"					OUT				"	A_5	"	"	"	"	"	"	"
305	"						OUT			"	A_6	"	"	"	"	"	"	"
306	"							OUT		"	A_7	"	"	"	"	"	"	"
307	"								OUT	"	A_8	"	"	"	"	"	"	"
308	"	OUT								"	Clock		1.0		1.3		1.0	µs
309	"		OUT							"	"		"		"		"	"
310	"			OUT						"	"		"		"		"	"
311	"				OUT					"	"		"		"		"	"
312	"					OUT				"	"		"		"		"	"
313	"						OUT			"	"		"		"		"	"
314	"							OUT		"	"		"		"		"	"
315	"									"	"		"		"		"	"
316	"								OUT	"	"		"		"		"	"
317	"									"	"		"		"		"	"
318	"									"	"		"		"		"	"
319	"									"	"		"		"		"	"
320	"									"	"		"		"		"	"
321	"									"	"		"		"		"	"
322	"									"	"		"		"		"	"
323	"									"	"		"		"		"	"

1/ Pins not designated may be "HIGH" level logic, "LOW" level logic, or open. Exceptions are as follows: $V_{IC(pos)}$ tests, the V_{SS} terminal shall be open; $V_{IC(neg)}$ tests, the V_{DD} terminal shall be open; I_{SS} tests, the output terminals shall be open; I_{IH1} tests, the undesignated terminals shall be open.

2/ In device type 56, circuit B, all terminals except 12 and 14 are inputs connected to gate structures, therefore, the table III, $V_{IC(pos)}$ and $V_{IC(neg)}$ tests shall be expanded to include testing terminals 1 through 8 and 16 through 23.

3/ The I_{SS} test measurements shall be performed in sequence.

4/ Apply clock pulse V_{IN} = 0 V dc to V_{DD} until proper output state is achieved.

5/ V_{IH} and V_{IL} tests are performed by repeating the truth table tests (numbers 185 through 211) using the input and output conditions as follows:

Test	V_{DD}	Input		Output	
		H	L	H	L
V_{IH1} V_{IL1}	5.0 V	3.5 V	1.5 V	4.5 V min	0.5 V max
V_{IH2} V_{IL2}	10.0 V	7.0 V	3.0 V	9.0 V min	1.0 V max
V_{IH3} V_{IL3}	15.0 V	11.0 V	4.0 V	13.5 V min	1.5 V max

6/ The device manufacturer may, at his option, measure I_{IL} and I_{IH} at 25°C for individual input or measure all inputs together.

7/ See 4.4.1c.

8/ The truth table tests shall be performed in sequence.

9/ The truth table test shall be performed at V_{IH} and $V_{DD} \leq 5$ V dc and ≥ 18 V dc. L = V_{SS} +0.50 V dc maximum and H = V_{DD} -0.5 V dc minimum

10/ The maximum clock frequency (f_{CL}) requirements are considered met if proper output state changes occur with the pulse repetition period set to that given in the limits column.

4.4.3 Group C inspection. Group C inspection shall be in accordance with table III of method 5005 of MIL-STD-883 and as follows:

a. End-point electrical parameters shall be as specified in table II herein. Delta limits shall apply only to subgroup 1 of group C inspection, and shall consist of tests specified in table IV herein.

b. Steady-state life test (method 1005 of MIL-STD-883) conditions:

(1) Test condition D, as specified in 4.5.2, and as shown on figure 5, or equivalent.

(2) T_A = 125°C minimum.

(3) Test duration, 1,000 hours, except as permitted by appendix B of MIL-M-38510 and method 1005 of MIL-STD-883.

4.4.4 Group D inspection. Group D inspection shall be in accordance with table IV of method 5005 of MIL-STD-883. End-point electrical parameters shall be as specified in table II.

4.4.5 Group E inspection. Group E inspection is required only for device types intended to be marked as radiation hardened (see 3.6.1). When group E testing is performed it shall be in accordance with table V of method 5005 of MIL-STD-883 and 4.5.5 herein. When group E inspection is performed for class S devices, the total dose radiation testing shall be included as an additional test in the wafer lot acceptance of method 5007 of MIL-STD-883.

4.5 Methods of inspection. Methods of inspection shall be specified as follows:

4.5.1 Voltage and current. All voltages given are referenced to the microcircuit V_{SS} terminal, unless otherwise specified. Currents given are conventional current and positive when flowing into the referenced terminal.

4.5.2 Burn-in and life test cooldown procedures. Burn-in and life test cooldown procedures shall be in accordance with MIL-STD-883 methods 1005 and 1015.

TABLE IV. Delta limits at 25°C.

Parameter 1/	Device types					
	01	02	03	04	05	06
I_{SS}	±60 nA	±100 nA	±100 nA	±100 nA	±400 nA	±100 nA
V_{OL1}	±.04 V	±.04 V	±.04 V	±.04 V	±.04 V	±.04 V
V_{OH1}	±.08 V	±.08 V	±.08 V	±.08 V	±.08 V	±.08 V

Parameter 1/	Device types					
	51	52	53	54	55	56
I_{SS}	±60 nA	±100 nA	±100 nA	±100 nA	±400 nA	±100 nA
I_{OL1}	±15%	±15%	±15%	±15%	±15%	±15%
I_{OH1}	±15%	±15%	±15%	±15%	±15%	±15%

1/ Each of the above parameters shall be recorded before and after the required burn-in and life tests to determine delta's (Δ).

4.5.3 High voltage (V_{ZAP}) test of input protection circuits. All input terminals (up to a maximum of 4) of the DUT shall be subjected to a voltage pulse from a 100 pF source charged to 400 V. This destructive test shall be conducted as follows using the test circuit on figure 12.

a. Measure I_{IL} and I_{IH} at the inputs selected, as stated above, at 25°C. The test limit for each input tested shall be ±10 nA at the specified V_{DD}. Measure I_{SS} on the DUT at 25°C. The test limit for this measurement shall be increased by a maximum of 20 percent of the specified I_{SS} table III limit at the specified V_{DD}.

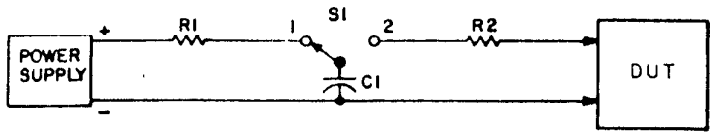

NOTES:
1. R1 = 1 MΩ to 50 MΩ.
2. R2 = 1.5 kΩ.
3. C1 = 100 pF.
4. V_{ZAP} = 400 V charge on CL.
5. S1 = Hg-wetted "bounceless" relay.

FIGURE 12. High voltage V_{ZAP} test circuit.

b. V_{ZAP} is applied to the DUT in the following modes (see table V) by changing C1 to V_{ZAP} with S1 in position 1 and then switching to position 2.

TABLE V. Modes for high-voltage test.

Mode	+ Terminal	- Terminal
1	V_{DD}	Input
2	Input	V_{SS}
3	Input	Associated output

c. Within 24 hours repeat the I_{SS}, I_{IL}, and I_{IH} measurements on the same terminals as performed above. If a DUT exhibits leakage currents in excess of the specified limits after the V_{ZAP} test, it shall be classified as a failure.

4.5.4 Quiescent supply current (I_{SS}) test. When performing quiescent supply current measurements (I_{SS}), the meter shall be placed so that all currents flow through the meter.

4.5.5 Radiation hardness assurance (RHA) testing. The RHA testing shall be performed in accordance with test procedures and sampling specified in table V of method 5005 of MIL-STD-883 and herein:

a. Before irradiation, selected samples shall be assembled in qualified packages and pass the governing electrical parameters (group A, subgroup 1 at 25°C) and also be subjected to the threshold-voltage test in table VIII in order to calculate the delta threshold (ΔV_T) after irradiation.

b. The devices shall be subjected to a total radiation dose as specified in MIL-M-38510 for the radiation hardness assurance (RHA) level being tested, and meet the end point electrical parameters as defined in table VI at 25°C, after exposure. The start and completion of the end point electrical parameter measurements shall not exceed 2 hours following irradiation.

c. Threshold-voltage test circuit conditions shall be as specified in table VIII and figure 13. In situ and remote testing, the tests shall be performed with the devices biased in accordance with table VII and bias may be interrupted for up to 1 minute to remove devices to the remote bias fixture.

d. After irradiation, the devices shall pass the truth table test as specified in subgroup 7 in table III, or if subgroup 7 is not required, then an equivalent truth table test shal be performed.

TABLE VI. Radiation hardness end-point electrical parameters at 25°C.

Parameter	Test limits (all device types)	V_{DD} Device types 01-06	V_{DD} Device types 51-56
		(V dc)	(V dc)
V_{TN}	0.3 V min	10	10
V_{TP}	2.8 V max	10	10
ΔV_T	1.4 V max	10	10
I_{SS}	100 x max limit	15	18
t_{PLH}	1.35 x max limit	5	5
t_{PHL}	1.35 x max limit	5	5

4.5.5.1 Class S requirements. For class S devices, the total dose radiation testing shall be included as an additional test in the wafer lot acceptance of method 5007 of MIL-STD-883. The manufacturer shall test a minimum of four samples from each wafer, selected at a radius approximately equal to two-thirds of the wafer radius and spaced uniformly around this radius and shall reject the wafer if any measurement exceeds the post irradiation end-point electrical parameter limits.

TABLE VII. Bias during exposure to radiation.

Device type	Pin connections 1/		
	V_{DD} = 10 V dc through a 30 kΩ to 60 kΩ resistor	V_{SS} = GND	V_{DD} = 10 V dc
01,51	1,3,4,5,6	7	14
02,52	1,4,5,6,7,9,10, 11,13,14,15	8	16
03,53	1,6,7,9,14,15	8	16
04,54	1,4,5,6,7,9,10,11, 13,14,15,	8	16
05,55	1,2,10,15	8	16
06,56	9,10,11,13,14,15	12	24

1/ Pins not designated are open or connected to 10 V dc through a 30 kΩ to 60 kΩ resistor.

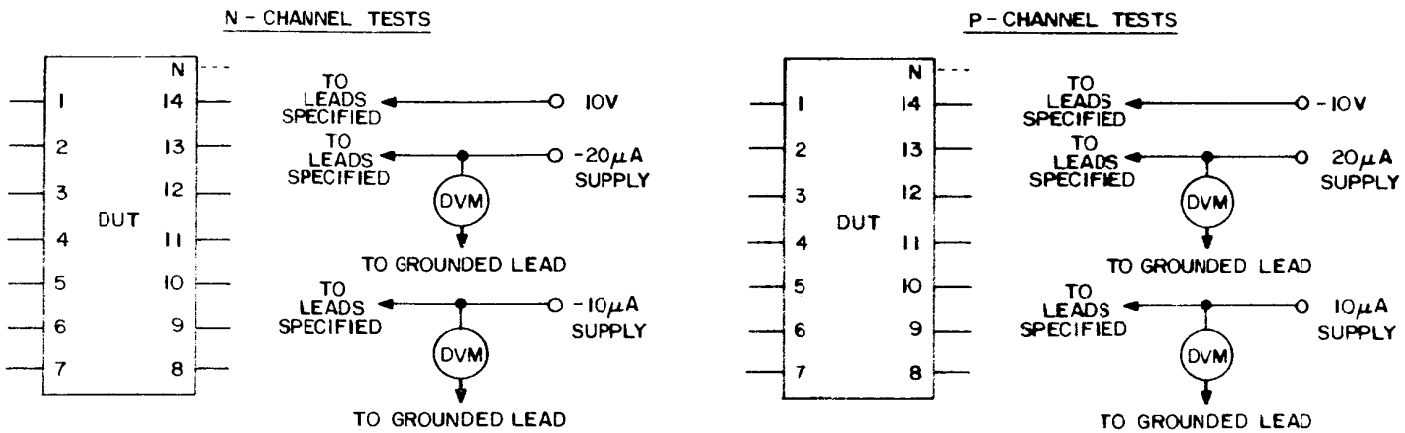

FIGURE 13. Threshold-voltage test circuit.

TABLE VIII. Threshold-voltage test circuit conditions.

Device type	GND	10 V	V_{TN} measured at -20 μA supply	V_{TN} measured at -10 μA supply	GND	-10 V	V_{TP} measured at 20 μA supply	V_{TP} measured at 10 μA supply
01 51	3	14	1,4,5,6,7		3	1,4,5,6,7	14	
02 52	10	16	1,4,5,6,7,8,9, 11,13,14,15		10	1,4,5,6,7,8,9, 11,13,14,15	16	
03 53	1	16	6,7,8,9,14,15		1	6,7,8,9,14,15	16	
04 54	10	16	1,4,5,6,7,8,9, 11,12,13,14,15		10	1,4,5,6,7,8,9, 11,13,14,15	16	
05 55	2	1,10,15, 16	8		2	1,8,10,15	16	
06 56	10	9,11,13,14,15,16, 17,18,19,20,21, 22,23,24		12	10	1,2,3,4,5,6,7, 8,9,11,12,13,14, 15		24

4.6 Data reporting. When specified in the purchase order or contract, a copy of the following data, as applicable, shall be supplied:

a. Attributes data for all screening tests (see 4.2) and variables data for all static burn-in, dynamic burn-in, and steady-state life tests.
b. A copy of each radiograph.
c. The quality conformance inspection data (see 4.4).
d. Parameter distribution data on parameters evaluated during burn-in (see 3.5).
e. Final electrical parameters data (see 4.2d).

5. PACKAGING

5.1 Packaging requirements. The requirements for packaging shall be in accordance with MIL-M-38510.

6. NOTES

6.1 Intended use. Microcircuits conforming to this specification are intended for original equipment design applications and logistic support of existing equipment.

6.2 Ordering data. The acquisition document should specify the following:

a. Complete part number (see 1.2).

b. Requirements for delivery of one copy of the quality conformance inspection data pertinent to the device inspection lot to be supplied with each shipment by the device manufacturer, if applicable.

c. Requirements for certificate of compliance, if applicable.

d. Requirements for notification of change of product or process to the contracting activity in addition to notification to the qualifying activity, if applicable.

e. Requirements for failure analysis (including required test condition of method 5003 of MIL-STD-883), corrective action and reporting of results, if applicable.

f. Requirements for product assurance options.

g. Requirements for special lead lengths or lead forming, if applicable.

h. Requirements for "JAN" marking.

i. Requirement for total dose radiation testing (see 3.6.1 and 4.5.5), if applicable.

6.3 Abbreviations, symbols, and definitions. The abbreviations, symbols, and definitions used herein are defined in MIL-M-38510, MIL-STD-1331, and as follows:

V_{ZAP} - - - - - - - - - - - -	Input test voltage.
C_i - - - - - - - - - - - - - -	Input terminal-to-V_{SS} capacitance.
GND - - - - - - - - - - - - - -	Ground. Zero voltage potential.
T_A - - - - - - - - - - - - - -	Free air temperature.
V_{DD} - - - - - - - - - - - - -	Positive supply voltage.
V_{SS} - - - - - - - - - - - - -	Negative supply voltage.
I_{SS} - - - - - - - - - - - - -	Quiescent supply current.

6.4 Logistic support. Unless otherwise specified, microcircuits acquired for Government logistic support shall be acquired to device class S for National Aeronautics and Space Administration or class B for Department of Defense (see 1.2.2), lead finish C (see 3.3). Longer length leads and lead forming shall not affect the part number.

6.5 Substitutability. The cross-reference information below is presented for the convenience of users. Microcircuits covered by this specification will functionally replace the listed generic-industry type. Generic-industry microcircuit types may not have equivalent operational performance characteristics across military temperature ranges or reliability factors equivalent to MIL-M-38510 device types and may have slight physical variations in relation to case size. The presence of this information shall not be deemed as permitting substitution of generic-industry types for MIL-M-38510 types or as a waiver of any of the provisions of MIL-M-38510.

Military device type	Generic-industry type
01	4006A
02	4014A
03	4015A
04	4021A
05	4031A
06	4034A
51	4006B
52	4014B
53	4015B
54	4021B
55	4031B
56	4034B

6.6 Handling. MOS devices must be handled with certain precautions to avoid damage due to accumulation of static charge. Input protective devices have been designed in the chip to minimize the effect of this static buildup. However, the following handling practices are recommended:

a. Devices should be handled on benches with conductive and grounded surface.

b. Ground test equipment, tools, and operator.

c. Do not handle devices by the leads.

d. Store devices in conductive material or carriers.

e. Avoid use of plastic, rubber, or silk in MOS areas.

f. Maintain relative humidity above 50 percent, if practical.

6.7 Changes from previous issue. Asterisks are not used in this revision to identify changes with respect to the previous issue, due to the extensiveness of the changes.

Custodians:
Army - ER
Navy - EC
Air Force - 17
NASA - NA

Review activities:
Army - MI
Air Force - 11, 19, 85, 99
DLA - ES

User activities:
Army - AR, SM
Navy - AS, OS, CG, MC, SH

Preparing activity:
NASA - NA

Agent:
DLA - ES

(Project 5962-0964-3)

☆ U.S. GOVERNMENT PRINTING OFFICE: 1987 — 548-063/60070