MIL-M-38510/62A
17 JUNE 1985
SUPERSEDING
MIL-M-38510/62(USAF)
24 September 1976

MILITARY SPECIFICATION

MICROCIRCUITS, DIGITAL, ECL, AND/NAND GATES, MONOLITHIC SILICON

This specification is approved for use by all Departments and Agencies of the Department of Defense.

1. SCOPE

1.1 Scope. This specification covers the detail requirements for monolithic silicon, ECL, logic gating microcircuits. Two product assurance classes and a choice of case outlines and lead finishes are provided and are reflected in the complete part number.

1.2 Part number. The part number shall be in accordance with MIL-M-38510.

1.2.1 Device types. The device types shall be as follows:

Device type	Circuit
01	Triple, and Single AND/NAND Gate
02	Hex AND Gate

1.2.2 Device class. The device class shall be the product assurance level as defined in MIL-M-38510.

1.2.3 Case outlines. The case outlines shall be designated as follows:

Outline letter	Case outline (see MIL-M-38510, appendix C)
E	D-2 (16 pin, 1/4" x 7/8"), dual-in-line package
F	F-5 (16 pin, 1/4" x 3/8"), flat-package
2	C-2 (20-terminal, .350" x .350"), square chip carrier package

1.3 Absolute maximum ratings.

Supply voltage range- - - - - - - - - - - -	0 V dc minimum to -7.0 V dc maximum
Input voltage range - - - - - - - - - - - - -	0 V dc to V_{EE} (most negative power supply voltage)
Storage temperature range - - - - - - - - -	-65°C to +150°C
Maximum power dissipation (P_D) per gate 1/-	55 mW
Lead temperature (soldering, 10 seconds)- -	+260°C
Thermal resistance, junction-to-case (θ_{JC}):	
Cases E and F - - - - - - - - - - - - - - -	See MIL-M-38510, appendix C
Case 2- - - - - - - - - - - - - - - - - - -	60°C/W 2/
Junction temperature (T_J) - - - - - - - - - -	+165°C 3/
Maximum output current- - - - - - - - - - - -	-50 mA

1/ Must withstand the added P_D due to short circuit test (e.g., I_{OS}).
2/ When a thermal resistance value is included in MIL-M-38510 appendix C, it shall supersede the value stated herein.
3/ Maximum junction temperature shall not be exceeded except for allowable short duration burn-in screening conditions per method 5004 of MIL-STD-883.

Beneficial comments (recommendations, additions, deletions) and any pertinent data which may be of use in improving this document should be addressed to: Rome Air Development Center (RBE-2), Griffiss AFB, NY 13441, by using the self-addressed Standardization Document Improvement Proposal (DD Form 1426) appearing at the end of this document or by letter.

FSC 5962

DISTRIBUTION STATEMENT A. Approved for public release; distribution is unlimited.

1.4 Recommended operating conditions.

Supply voltage(V_{CC}) - - - - - - - - - - - - - -	-5.46 V minimum to -4.94 V maximum
Minimum high-level input voltage (V_{IH})- - -	-1.105 V at T_A = +25°C
(at 500 linear feet per minute) - - - - -	-1.000 V at T_A = +125°C
(ft/min)- - - - - - - - - - - - - - - - - - -	-1.255 V at T_A = -55°C
Maximum low-level input voltage (V_{IL}) - - -	-1.475 V at T_A = +25°C
(at 500 linear ft/min)- - - - - - - - - - -	-1.400 V at T_A = +125°C
	-1.510 V at T_A = -55°C
Normalized fanout (each output) - - - - - -	10 4/
Case operating temperature range (T_C) - - - (at 500 linear ft/min)	-55°C to +125°C
Case operating temperature range (T_C) - - - (at still air)	-55°C to +125°C

2. APPLICABLE DOCUMENTS

2.1 Government specifications and standards. Unless otherwise specified, the following specifications and standards, of the issue listed in that issue of the Department of Defense Index of Specifications and Standards specified in the solicitation, form a part of this specification to the extent specified herein.

SPECIFICATION

MILITARY

MIL-M-38510 - Microcircuits, General Specification for.

STANDARD

MILITARY

MIL-STD-883 - Test Methods and Procedures for Microelectronics.

(Copies of specifications, standards, handbooks, drawings, and publications required by manufacturers in connection with specific acquisition functions should be obtained from the contracting activity or as directed by the contracting officer.)

2.2 Order of precedence. In the event of a conflict between the text of this specification and the references cited herein, the text of this specification shall take precedence.

3. REQUIREMENTS

3.1 Detail specification. The individual item requirements shall be in accordance with MIL-M-38510, and as specified herein.

3.2 Design, construction, and physical dimensions. The design, construction, and physical dimensions shall be as specified in MIL-M-38510 and herein.

3.2.1 Logic and terminal connections. The logic diagram and terminal connections shall be as specified on figure 1.

3.2.2 Truth tables and logic equations. The truth tables and logic equations shall be as specified on figure 2.

3.2.3 Schematic circuits. Schematic circuits shall be submitted to the preparing activity prior to inclusion of a manufacturer's device in this specification and shall be submitted to the qualifying activity and agent activity (DESC-ECS) as a prerequisite for qualification. All qualified manufacturers' schematics shall be maintained by the preparing activity and will be available upon request.

3.2.4 Case outlines. The case outlines shall be as specified in 1.2.3.

4/ Device will fanout in both high and low levels to the specified number of data inputs on the same device type as that being tested.

3.3 Lead material and finish. The lead material and finish shall be in accordance with MIL-M-38510 and 6.4 herein.

3.4 Electrical performance characteristics. The electrical performance characteristics are as specified in table I and apply over the full recommended case operating temperature range, unless otherwise specified.

TABLE I. Electrical performance characteristics.
(Limits are valid provided circuit is in a test socket and transverse air flow of 500 linear ft/min is maintained.)

Test	Symbol	Conditions 1/ $-55^\circ C \le T_C \le 125^\circ C$	T_C	V_{IH1}	V_{IL1}	Device type	Limits Min	Limits Max	Units
High-level output voltage	V_{OH}	V_{EE} = -5.2 V V_{CC} = 0 V Load = 100Ω to -2 V	+25°C +125°C -55°C	-0.780 -0.630 -0.880	-1.850 V -1.820 V -1.920 V	All	-0.930 -0.825 -1.080	-0.780 -0.630 -0.880	V
Low-level output voltage	V_{OL}	V_{EE} = -5.2 V V_{CC} = 0 V Load = 100Ω to -2 V	+25°C +125°C -55°C	-0.780 -0.630 -0.880	-1.850 V -1.820 V -1.920 V	All	-1.850 -1.820 -1.920	-1.620 -1.545 -1.655	V
High-level threshold output voltage	V_{OTH}	V_{EE} = -5.2 V V_{CC} = 0 V Load = 100Ω to -2 V	+25°C +125°C -55°C	-1.105 V -1.000 V -1.255 V	-1.475 V -1.400 V -1.510 V	All	-0.950 -0.845 -1.100	--- --- ---	V
Low-level threshold output voltage	V_{OTL}	V_{EE} = -5.2 V V_{CC} = 0 V Load = 100Ω to -2 V	+25°C +125°C -55°C	-1.105 V -1.000 V -1.255 V	-1.475 V -1.400 V -1.510 V	All	--- --- ---	-1.600 -1.525 -1.635	V
Power supply drain current	I_{EE}	V_{EE} = -5.2 V V_{CC} = 0 V				01	-39	---	mA
						02	-54	---	
High-level input current	I_{IH1}	V_{EE} = -5.2 V, V_{CC} = 0 V V_{IH1} = -0.780 V at +25°C, -0.630 V at +125°C, -0.880 V at -55°C				All	---	450	μA
High-level input current	I_{IH2}	V_{EE} = -5.2 V, V_{CC} = 0 V V_{IH1} = -0.780 V at +25°C, -0.630 V at +125°C, -0.880 V at -55°C				01 2/	---	375	μA
						02	---	495	

See footnotes at end of table.

TABLE I. Electrical performance characteristics - Continued.
(Limits are valid provided circuit is in a test socket and transverse air flow of 500 linear ft/min is maintained.)

Test	Symbol	Conditions 1/ $-55°C \leq T_C \leq 125°C$	Device type	Limits Min	Limits Max	Units
Low-level input current	I_{IL}	V_{EE} = -5.2 V, V_{CC} = 0 V V_{IL1} = -1.850 V at +25°C, -1.820 V at +125°C, -1.920 V at -55°C	All	0.3	---	µA
Transition time, low-to-high level	t_{TLH}	V_{EEL} = -3.2 V, V_{CC} = +2.0 V R_L = 50Ω, $C_L \leq 5$ pF (output under test) 2/ Load = 100Ω to GND (outputs not under test)	01	1.0	4.1	ns
			02	1.0	5.3	
Transition time, high-to-low level	t_{THL}	V_{EEL} = -3.2 V, V_{CC} = +2.0 V R_L = 50Ω, $C_L \leq 5$ pF (output under test) 2/ Load = 100Ω to GND (outputs not under test)	01	1.0	4.1	ns
			02	1.0	5.3	
Propagation delay time, low-to-high level	t_{PLH}	V_{EEL} = -3.2 V, V_{CC} = +2.0 V R_L = 50Ω, $C_L \leq 5$ pF (output under test) 2/ Load = 100Ω to GND (outputs not under test)	All	1.0	4.7	ns
			02 3/	1.0	5.9	
Propagation delay time, high-to-low level	t_{PHL}	V_{EEL} = -3.2 V, V_{CC} = +2.0 V R_L = 50Ω, $C_L \leq 5$ pF (output under test) 2/ Load = 100Ω to GND (outputs not under test)	All	1.0	4.7	ns
			02 3/	1.0	5.9	

1/ Complete terminal conditions shall be as specified in table III.

2/ Applicable to "B" inputs only.

3/ Applicable to "Common" input only.

3.5 Electrical test requirements. The electrical test requirements for each device class shall be the subgroups specified in table II. The electrical tests for each subgroup are described in table III.

TABLE II. Electrical test requirements.

MIL-STD-883 test requirements	Subgroups (see table III)	
	Class B devices	Class S devices
Interim electrical parameters (pre burn-in) (method 5004)	1	1
Final electrical test parameters (method 5004)	1*,2,3,9	1*,2,3,9
Group A test requirements (method 5005)	1,2,3,9, 10,11	1,2,3,9
Groups C and D end-point electrical parameters (method 5005)	1,2,3	1,2,3
Additional electrical subgroups for group C periodic inspections	None	10,11

*PDA applies to subgroup 1 (see 4.3c).

3.6 Marking. Marking shall be in accordance with MIL-M-38510.

3.7 Microcircuit group assignment. The devices covered by this specification shall be in microcircuit group number 29 (see MIL-M-38510, appendix E).

4. QUALITY ASSURANCE PROVISIONS

4.1 Sampling and inspection. Sampling and inspection procedures shall be in accordance with MIL-M-38510 and methods 5005 and 5007, as applicable, of MIL-STD-883, except as modified herein.

4.2 Qualification inspection. Qualification inspection shall be in accordance with MIL-M-38510. Inspections to be performed shall be those specified in method 5005 of MIL-STD-883 and herein for groups A, B, C, and D inspections (see 4.4.1 through 4.4.4).

4.3 Screening. Screening shall be in accordance with method 5004 of MIL-STD-883, and shall be conducted on all devices prior to qualification and quality conformance inspection. The following additional criteria shall apply:

a. Burn-in (method 1015 of MIL-STD-883).

(1) Test condition D or E, using the circuit shown on figure 3, or equivalent.

(2) T_A = +125°C minimum.

b. Interim and final electrical test parameters shall be as specified in table II, except interim electrical parameters test prior to burn-in is optional at the discretion of the manufacturer.

c. The percent defective allowable (PDA) shall be as specified in MIL-M-38510.

4.4 Quality conformance inspection. Quality conformance inspection shall be in accordance with MIL-M-38510. Inspections to be performed shall be those specified in method 5005 of MIL-STD-883 and herein for groups A, B, C, and D inspections (see 4.4.1 through 4.4.4).

4.4.1 Group A inspection. Group A inspection shall be in accordance with table I of method 5005 of MIL-STD-883 and as follows:

a. Tests shall be as specified in table II herein.

b. Subgroups 4, 5, 6, 7, and 8 of table I of method 5005 of MIL-STD-883 shall be omitted.

4.4.2 Group B inspection. Group B inspection shall be in accordance with table II of method 5005 of MIL-STD-883. Electrical parameters shall be as specified in table II herein.

4.4.3 Group C inspection. Group C inspection shall be in accordance with table III of method 5005 of MIL-STD-883 and as follows:

a. End-point electrical parameters shall be as specified in table II herein.

b. Steady-state life test (method 1005 of MIL-STD-883) conditions, or equivalent:

(1) Test condition D or E, using the circuit shown on figure 3, or equivalent.

(2) T_A = +125°C minimum.

(3) Test duration: 1,000 hours, except as permitted by method 1005 of MIL-STD-883.

c. Subgroups 3 and 4 shall be added to group C inspection requirements for class B devices and shall consist of the tests, conditions, and limits specified for subgroups 10 and 11 of group A.

4.4.4 Group D inspection. Group D inspection shall be in accordance with table IV of method 5005 of MIL-STD-883. End-point electrical parameters shall be as specified in table II herein.

4.5 Methods of inspection. Methods of inspection shall be specified as follows:

4.5.1 Voltage and current. All voltages given are referenced to the microcircuit ground terminal. Currents given are conventional and positive when flowing into the referenced terminal.

5. PACKAGING

5.1 Packaging requirements. The requirements for packaging shall be in accordance with MIL-M-38510.

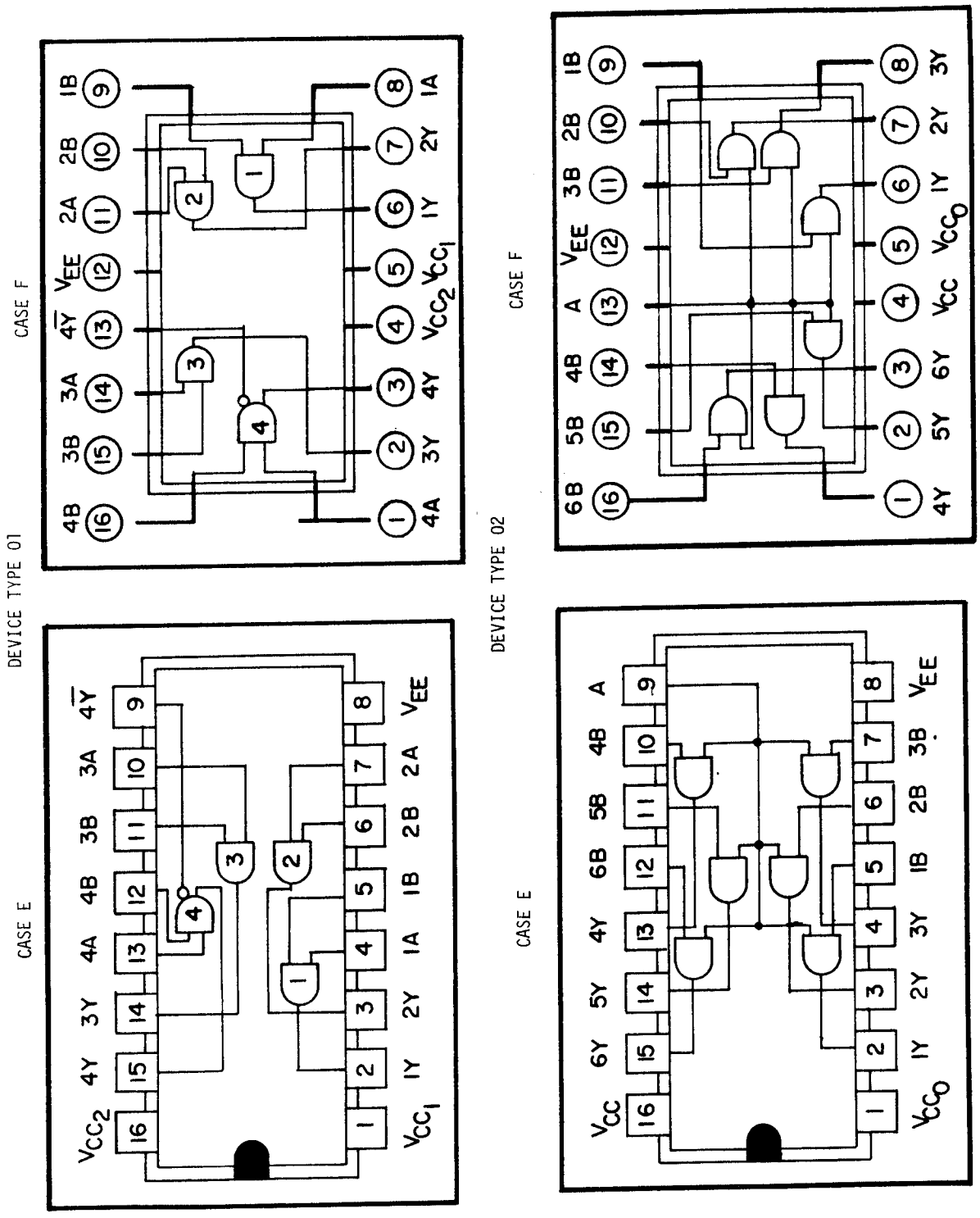

FIGURE 1. Logic diagram and terminal connections.

Device type 01

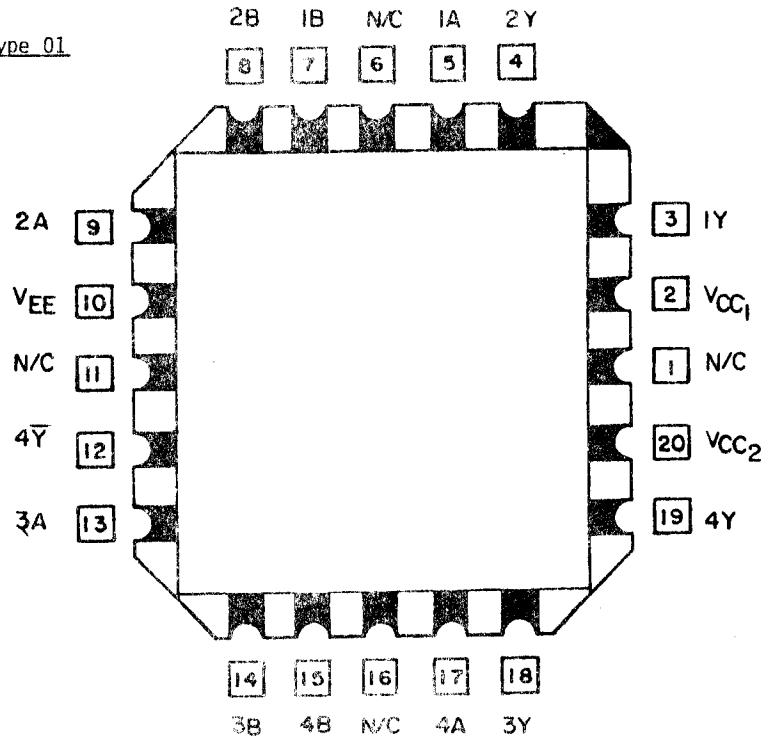

Device type 02

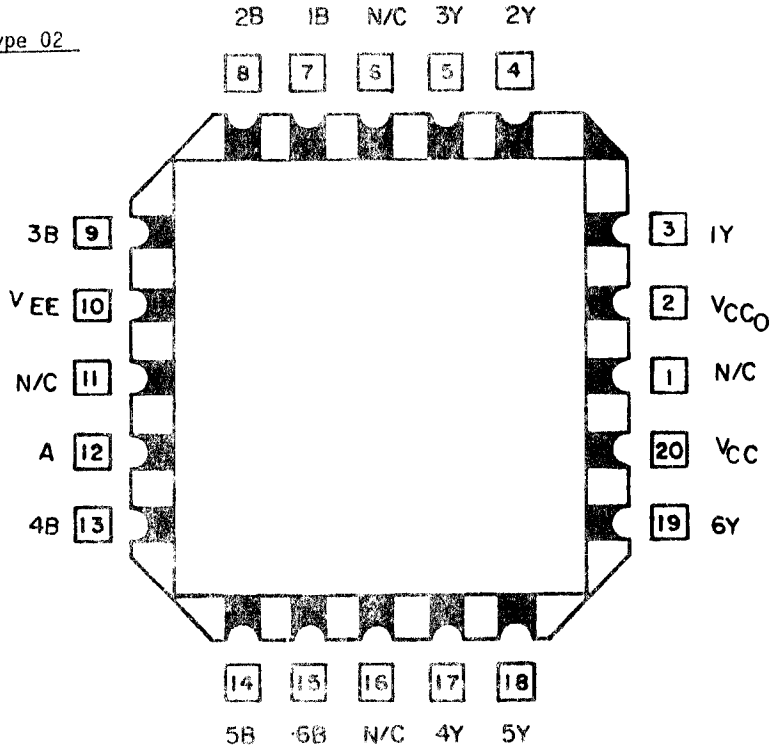

FIGURE 1. Terminal connections (top view).

Device type 01

Each gate

INPUTS		OUTPUTS	
A	B	Y	$\overline{Y}$*
L	L	L	H
H	L	L	H
L	H	L	H
H	H	H	L

*$\overline{Y}$ applies to gate 4 only.

Positive logic:

$Y = AB$

$\overline{Y} = \overline{AB}$

Device type 02

Each gate

INPUTS		OUTPUT
A	B	Y
L	L	L
H	L	L
L	H	L
H	H	H

Positive logic:

$Y = AB$

FIGURE 2. Truth table and logic equation.

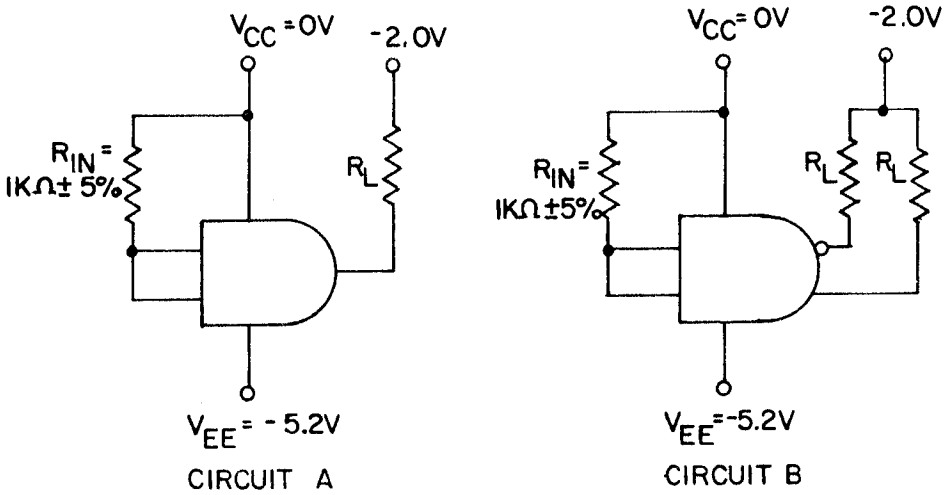

NOTES:
1. Inputs are internally returned to V_{EE} through 50 kΩ (minimum) resistors.
2. R_L = 50Ω ±5% deposited carbon rated at 70 mW at 125°C (or equivalent).
3. Circuit A shall be used for gates 1, 2 and 3 and circuit B for gate 4 for device type 01.
4. Circuit A shall be used for gates 1 thru 6 for device type 02.

FIGURE 3. Burn-in and life test circuits.

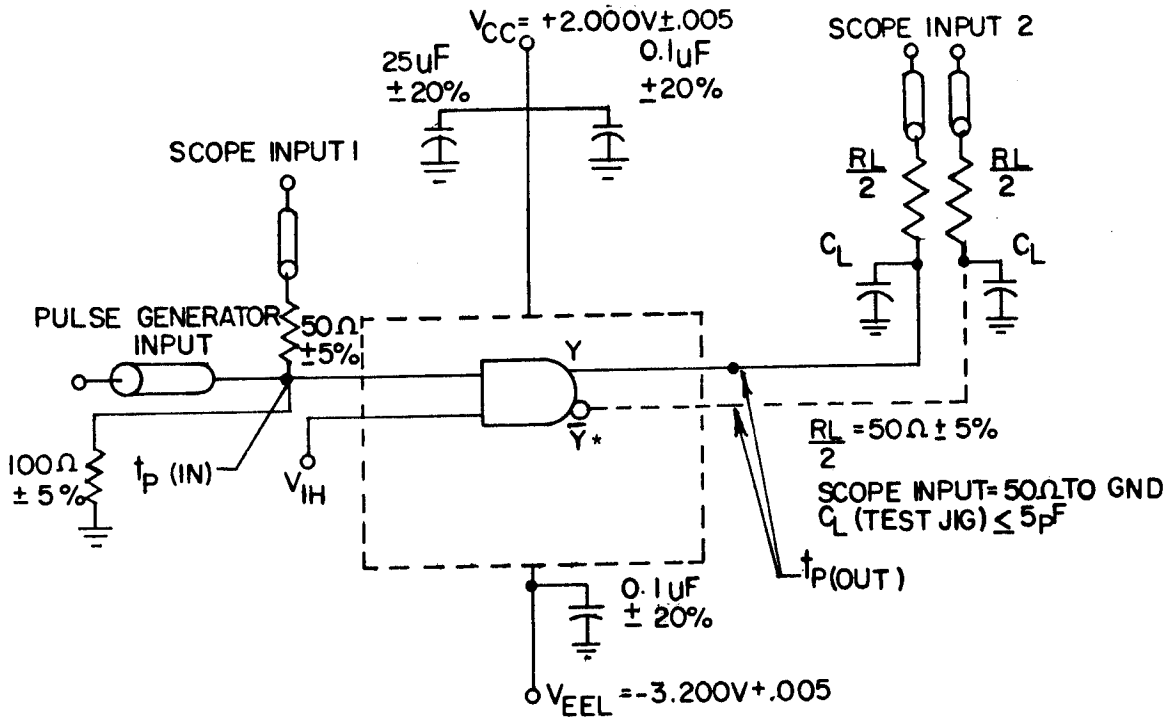

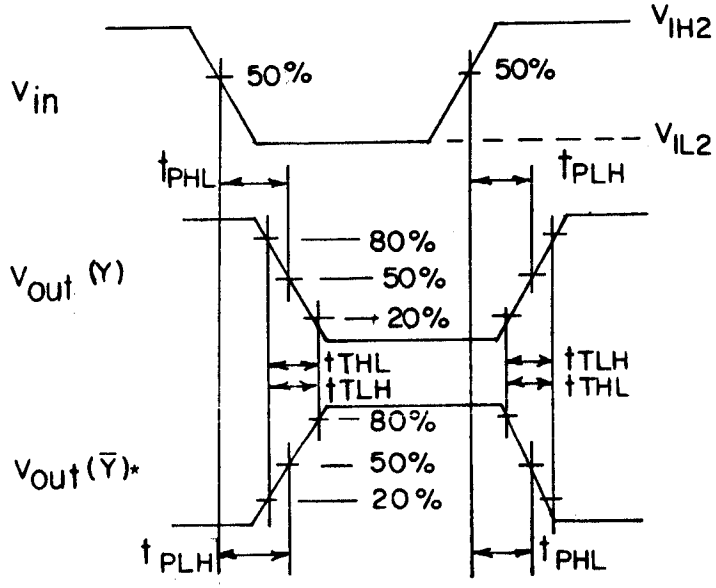

Generator characteristic:

T_A	V_{IH2} (±10 mV)	V_{IL2} (±10 mV)
25°C	+1.11 V	+0.31 V
125°C	+1.24 V	+0.36 V
-55°C	+1.01 V	+0.28 V

t_p = 40 ns ±1 ns
Z_{out} 50Ω
t_{THL} = 2.0 ns (20%-80%) ±0.2 ns
t_{TLH} = 2.0 ns (20%-80%) ±0.2 ns
RRR = 1.00 MHz ±.05 MHz

NOTES:
1. Perform test in accordance with test table; each output is tested separately.
2. All input and output cables to the scope are equal lengths of 50Ω coaxial cables. Wire length should be ≤ 0.250 (6.35 mm) from TP_{in} to input pin and TP_{out} to output pin.
3. Outputs not under test connected to a 100Ω resistor to ground.
4. (*) applies to gate 4 only.

FIGURE 4. Switching time test circuit and waveforms.

FIGURE 5. Junction temperature versus air velocity case E.

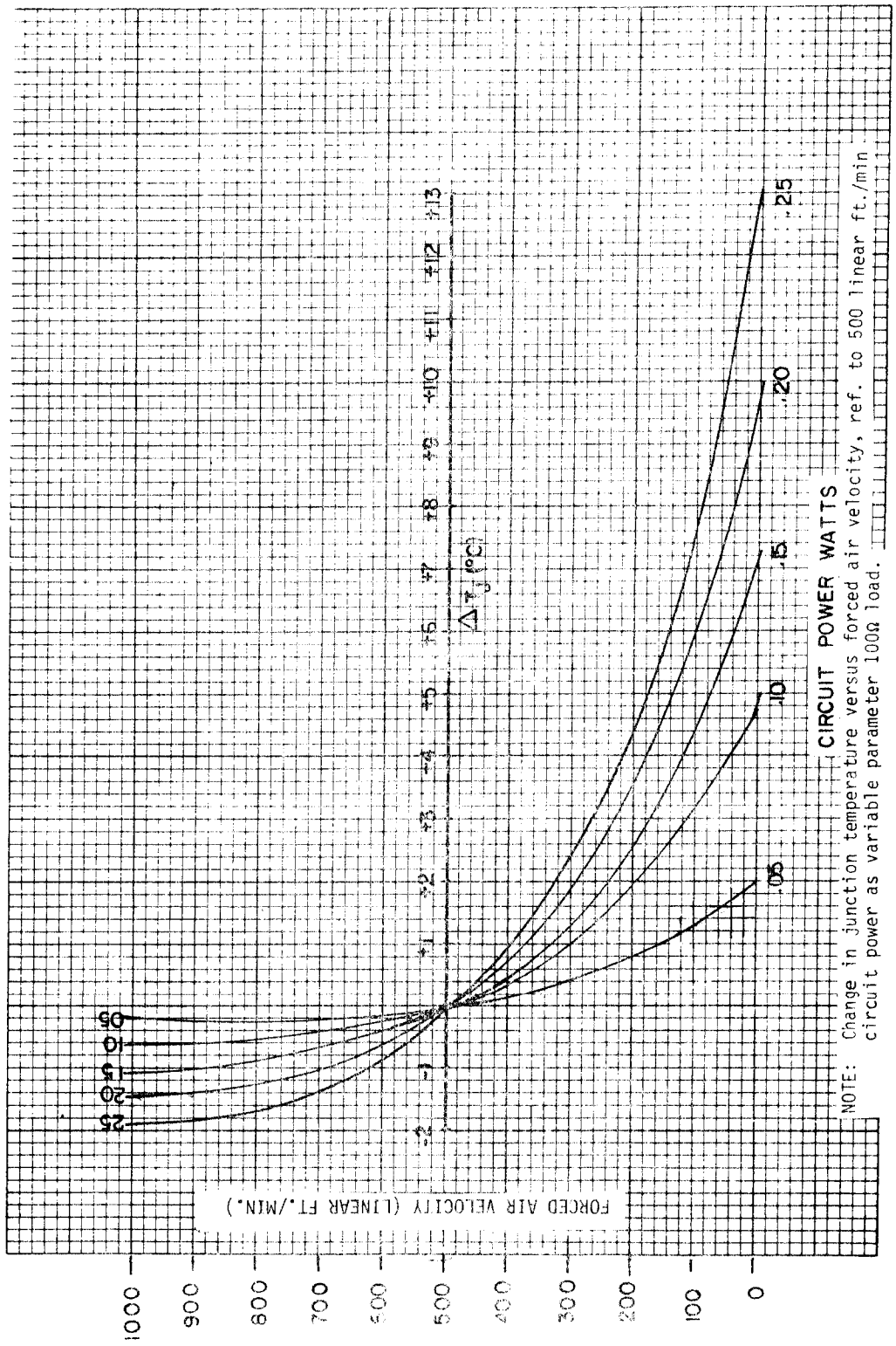

FIGURE 6. Junction temperature versus air velocity case F

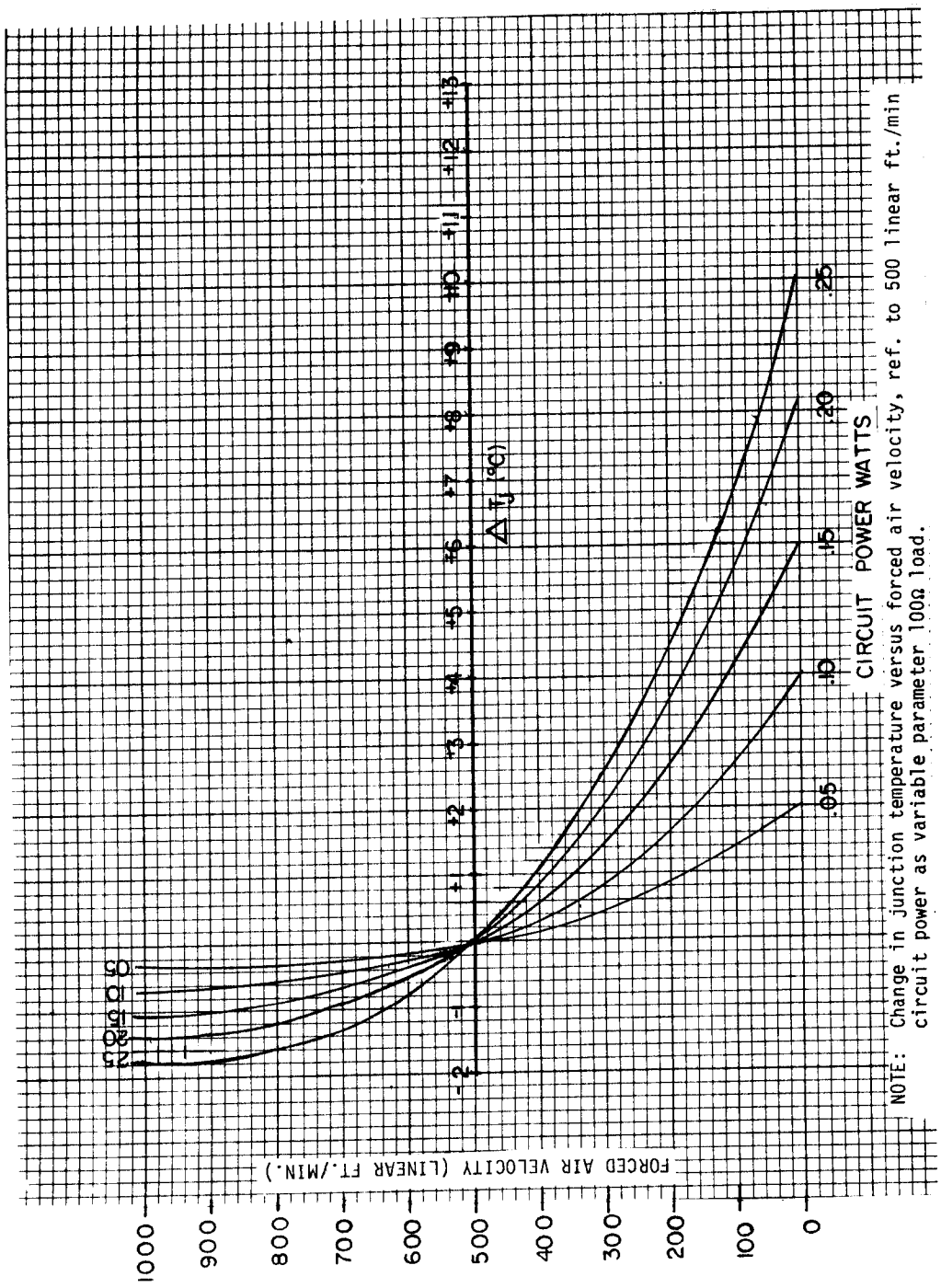

PARAMETER	-55°C (mV/°C)		+25°C (mV/°C)		+125°C (mV/°C)	
	$+\Delta T_J$	$-\Delta T_J$	$+\Delta T_J$	$-\Delta T_J$	$+\Delta T_J$	$-\Delta T_J$
$V_{OH\ max}$, V_{IH1}	1.25	1.25	1.50	1.25	1.50	1.50
$V_{OH\ min}$, V_{OTH}	1.88	1.88	1.05	1.88	1.05	1.05
$V_{OL\ max}$, V_{OTL}	0.44	0.44	0.75	0.44	0.75	0.75
$V_{OL\ min}$, V_{IL}	0.88	0.88	0.30	0.88	0.30	0.30
V_{ITH}	1.88	1.88	1.05	1.88	1.05	1.05
V_{ITL}	0.44	0.44	0.75	0.44	0.75	0.75

FIGURE 7. Adjustment coefficients for forcing function and test limit compensation.

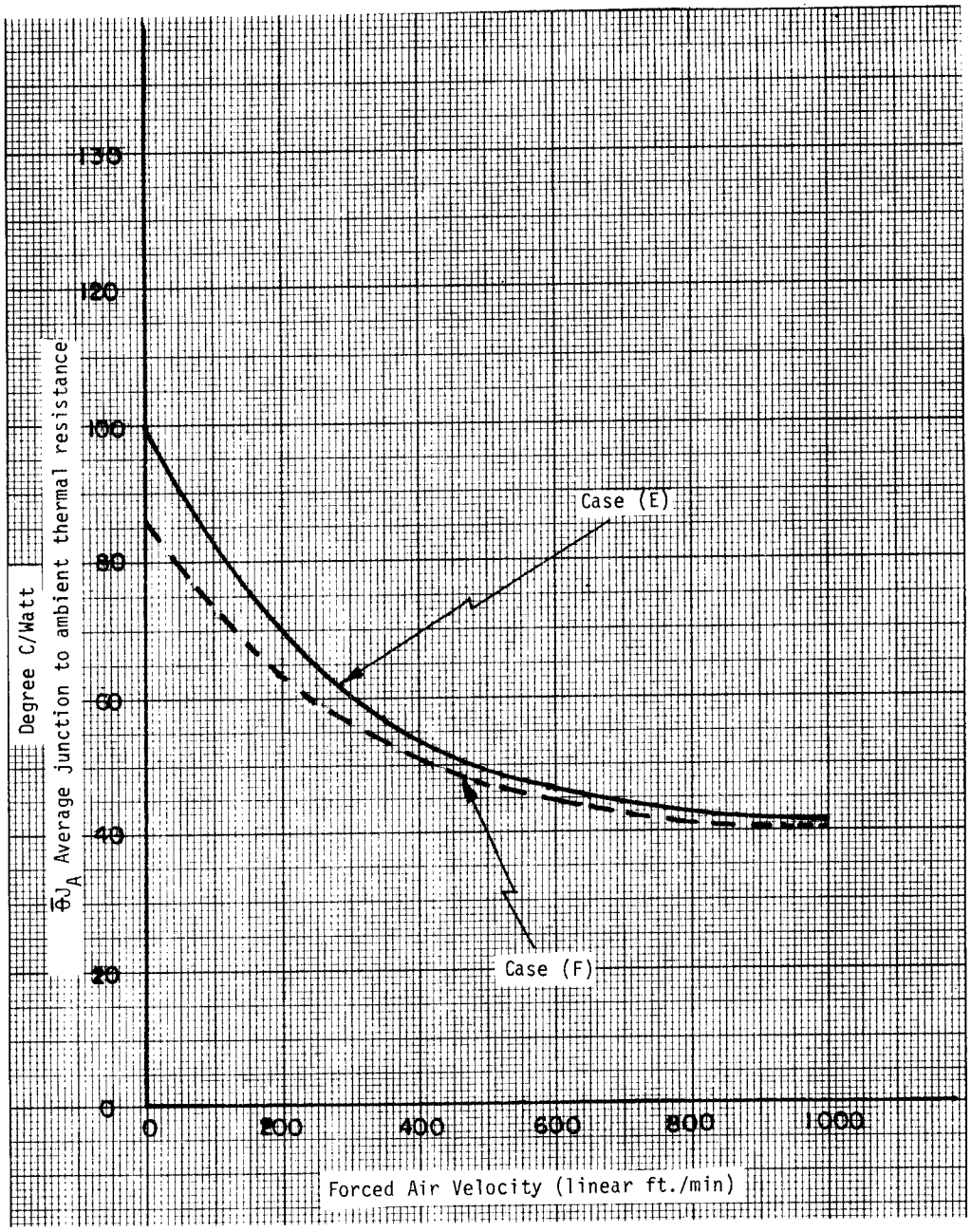

NOTE: ($\emptyset J_A$-vs- Forced Air Velocity) for case (E) and (F).
$T_J = T_C + \emptyset J_A \times P_D$ (max).

FIGURE 8. Air velocity versus thermal resistance.

TABLE III. Group A inspection for device type 01.

Symbol	MIL-STD-883 method	Cases E	1	2	3	4	5	6	7	8	9	10	11	12	13	14	15	16	Measured terminal	Limits						Units
		F	5	6	7	8	9	10	11	12	13	14	15	16	1	2	3	4		Subgroup 1 T_C = +25°C		Subgroup 2 T_C +125°C		Subgroup 3 T_C = -55°C		
		2	2	3	4	5	7	8	9	10	12	13	14	15	17	18	19	20		Min	Max	Min	Max	Min	Max	
		For terminal conditions see table IV																								
		Test no.	V_{CC1}	1Y	2Y	1A	1B	2B	2A	V_{EE}	4$\overline{Y}$	3A	3B	4B	4A	3Y	4Y	V_{CC2}								
V_{OH}	3006	1	GND	LD_1	LD_1	V_{IH1}	V_{IH1}			E_1	LD_1					LD_1	LD_1	GND	1Y	-.930	-0.780	-.825	-.630	-1.08	-.88	V
	"	2	"	"	"			V_{IH1}	V_{IH1}	"	"					"	"	"	2Y	"	"	"	"	"	"	"
	"	3	"	"	"					"	"	V_{IH1}	V_{IH1}			"	"	"	3Y	"	"	"	"	"	"	"
	"	4	"	"	"					"	"			V_{IH1}	V_{IH1}	"	"	"	4Y	"	"	"	"	"	"	"
	"	5	"	"	"					"	"			V_{IH1}	"	"	"	"	4$\overline{Y}$	"	"	"	"	"	"	"
	"	6	"	"	"					"	"				V_{IH1}	"	"	"	4$\overline{Y}$	"	"	"	"	"	"	"
	"	7	"	"	"					"	"			V_{IH1}	V_{IH1}	"	"	"	4$\overline{Y}$	"	"	"	"	"	"	"
V_{OL}	3007	8	"	"	"	V_{IH1}				"	"					"	"	"	1Y	-1.85	-1.62	-1.82	-1.545	-1.92	-1.655	"
	"	9	"	"	"		V_{IH1}			"	"					"	"	"	1Y	"	"	"	"	"	"	"
	"	10	"	"	"			V_{IH1}		"	"					"	"	"	1Y	"	"	"	"	"	"	"
	"	11	"	"	"				V_{IH1}	"	"					"	"	"	2Y	"	"	"	"	"	"	"
	"	12	"	"	"					"	"					"	"	"	2Y	"	"	"	"	"	"	"
	"	13	"	"	"					"	"	V_{IH1}				"	"	"	2Y	"	"	"	"	"	"	"
	"	14	"	"	"					"	"		V_{IH1}			"	"	"	3Y	"	"	"	"	"	"	"
	"	15	"	"	"					"	"					"	"	"	3Y	"	"	"	"	"	"	"
	"	16	"	"	"					"	"					"	"	"	3Y	"	"	"	"	"	"	"
	"	17	"	"	"					"	"			V_{IH1}		"	"	"	4Y	"	"	"	"	"	"	"
	"	18	"	"	"					"	"				V_{IH1}	"	"	"	4Y	"	"	"	"	"	"	"
	"	19	"	"	"					"	"					"	"	"	4Y	"	"	"	"	"	"	"
	"	20	"	"	"					"	"			V_{IH1}	V_{IH1}	"	"	"	4$\overline{Y}$	"	"	"	"	"	"	"
V_{OTH}		21	"	"	"	V_{ITH}	V_{IH1}			"	"					"	"	"	1Y	-.95		-.845		-1.1		"
		22	"	"	"	V_{IH1}	V_{ITH}			"	"					"	"	"	1Y	"		"		"		"
		23	"	"	"			V_{ITH}	V_{IH1}	"	"					"	"	"	2Y	"		"		"		"
		24	"	"	"			V_{IH1}	V_{ITH}	"	"					"	"	"	2Y	"		"		"		"
		25	"	"	"					"	"	V_{ITH}	V_{IH1}			"	"	"	3Y	"		"		"		"
		26	"	"	"					"	"	V_{IH1}	V_{ITH}			"	"	"	3Y	"		"		"		"
		27	"	"	"					"	"			V_{ITH}	V_{IH1}	"	"	"	4Y	"		"		"		"
		28	"	"	"					"	"			V_{IH1}	V_{ITH}	"	"	"	4Y	"		"		"		"
		29	"	"	"					"	"			V_{ITL}	V_{IH1}	"	"	"	4$\overline{Y}$	"		"		"		"
		30	"	"	"					"	"			V_{IH1}	V_{ITL}	"	"	"	4$\overline{Y}$	"		"		"		"
V_{OTL}		31	"	"	"	V_{ITL}	V_{IH1}			"	"					"	"	"	1Y		-1.6		-1.525		-1.635	"
		32	"	"	"	V_{IH1}	V_{ITL}			"	"					"	"	"	1Y		"		"		"	"
		33	"	"	"			V_{ITL}	V_{IH1}	"	"					"	"	"	2Y		"		"		"	"
		34	"	"	"			V_{IH1}	V_{ITL}	"	"					"	"	"	2Y		"		"		"	"
		35	"	"	"					"	"	V_{ITL}	V_{IH1}			"	"	"	3Y		"		"		"	"
		36	"	"	"					"	"	V_{IH1}	V_{ITL}			"	"	"	3Y		"		"		"	"
		37	"	"	"					"	"			V_{ITL}	V_{IH1}	"	"	"	4Y		"		"		"	"
		38	"	"	"					"	"			V_{IH1}	V_{ITL}	"	"	"	4Y		"		"		"	"
		39	"	"	"					"	"			V_{ITH}	V_{IH1}	"	"	"	4$\overline{Y}$		"		"		"	"
		40	"	"	"					"	"			V_{ITH}		"	"	"	4$\overline{Y}$		"		"		"	"
I_{IH1}	3010	41	"			V_{IH1}				"								"	1A		265		450		450	μA
	"	42	"						V_{IH1}	"								"	2A		"		"		"	"
	"	43	"							"		V_{IH1}						"	3A		"		"		"	"
	"	44	"							"					V_{IH1}			"	4A		"		"		"	"
I_{IH2}	"	45	"				V_{IH1}			"								"	1B		220		375		375	"
	"	46	"					V_{IH1}		"								"	2B		"		"		"	"
	"	47	"							"			V_{IH1}					"	3B		"		"		"	"
	"	48	"							"				V_{IH1}				"	4B		"		"		"	"

TABLE III. Group A inspection for device type 01 - Continued.

Symbol	MIL-STD-883 method	Cases E / F / 2 / Test no.	For terminal Conditions see table IV: 1 / 5 / 2 — V_{CC1}	2 / 6 / 3 — 1Y	3 / 7 / 4 — 2Y	4 / 8 / 5 — 1A	5 / 9 / 7 — 1B	6 / 10 / 8 — 2B	7 / 11 / 9 — 2A	8 / 12 / 10 — V_{EE}	9 / 13 / 12 — 4Y	10 / 14 / 13 — 3A	11 / 15 / 14 — 3B	12 / 16 / 15 — 4B	13 / 1 / 17 — 4A	14 / 2 / 18 — 3Y	15 / 3 / 19 — 4Y	16 / 4 / 20 — V_{CC2}	Measured terminal	Limits: Subgroup 1 T_C = +25°C Min	Subgroup 1 Max	Subgroup 2 T_C +125°C Min	Subgroup 2 Max	Subgroup 3 T_C = -55°C Min	Subgroup 3 Max	Units
I_{IL}	3009	49	GND			V_{IL1}				E_1								GND	1A	0.5		0.3		0.5		uA
"	"	50	"				V_{IL1}			"								"	1B	"		"		"		"
"	"	51	"					V_{IL1}		"								"	2B	"		"		"		"
"	"	52	"						V_{IL1}	"								"	2A	"		"		"		"
"	"	53	"							"		V_{IL1}						"	3A	"		"		"		"
"	"	54	"							"			V_{IL1}					"	3B	"		"		"		"
"	"	55	"							"				V_{IL1}				"	4B	"		"		"		"
"	"	56	"							"					V_{IL1}			"	4A	"		"		"		"
I_{EE}		57	"							"								"	V_{EE}	-35		-39		-39		mA

Symbol	MIL-STD-883 method	Cases E / F / 2 / Test no.	1 / 5 / 2 — V_{CC1}	2 / 6 / 3 — 1Y	3 / 7 / 4 — 2Y	4 / 8 / 5 — 1A	5 / 9 / 7 — 1B	6 / 10 / 8 — 2B	7 / 11 / 9 — 2A	8 / 12 / 10 — V_{EE}	9 / 13 / 12 — 4Y	10 / 14 / 13 — 3A	11 / 15 / 14 — 3B	12 / 16 / 15 — 4B	13 / 1 / 17 — 4A	14 / 2 / 18 — 3Y	15 / 3 / 19 — 4Y	16 / 4 / 20 — V_{CC2}	Measured terminal	Limits: Subgroup 9 T_C = +25°C Min	Subgroup 9 Max	Subgroup 10 T_C +125°C Min	Subgroup 10 Max	Subgroup 11 T_C = -55°C Min	Subgroup 11 Max	Units
t_{PLH}	3003	58	E_3	OUT	LD_2	IN	V_{IH2}			E_2	LD_2					LD_2	LD_2	E_3	1Y	1.0	4.0	1.0	4.7	1.0	4.3	ns
"	"	59	"	OUT	LD_2	V_{IH2}	IN			"	"					"	"	"	1Y	"	"	"	"	"	"	"
"	"	60	"	LD_2	OUT			IN	V_{IH2}	"	"					"	"	"	2Y	"	"	"	"	"	"	"
"	"	61	"	"	OUT			V_{IH2}	IN	"	"					"	"	"	2Y	"	"	"	"	"	"	"
"	"	62	"	"	LD_2					"	"	IN	V_{IH2}			OUT	"	"	3Y	"	"	"	"	"	"	"
"	"	63	"	"	"					"	"	V_{IH2}	IN			OUT	"	"	3Y	"	"	"	"	"	"	"
"	"	64	"	"	"					"	"			IN	V_{IH2}	LD_2	OUT	"	4Y	"	"	"	"	"	"	"
"	"	65	"	"	"					"	"			V_{IH2}	IN	"	OUT	"	4Y	"	"	"	"	"	"	"
"	"	66	"	"	"					"	OUT			IN	V_{IH2}	"	LD_2	"	4$\overline{Y}$	"	"	"	"	"	"	"
"	"	67	"	"	"					"	OUT			V_{IH2}	IN	"	"	"	4$\overline{Y}$	"	"	"	"	"	"	"
t_{PHL}	"	68	"	OUT	"	IN	V_{IH2}			"	LD_2					"	"	"	1Y	"	"	"	"	"	"	"
"	"	69	"	OUT	"	V_{IH2}	IN			"	"					"	"	"	1Y	"	"	"	"	"	"	"
"	"	70	"	LD_2	OUT			IN	V_{IH2}	"	"					"	"	"	2Y	"	"	"	"	"	"	"
"	"	71	"	"	OUT			V_{IH2}	IN	"	"					"	"	"	2Y	"	"	"	"	"	"	"
"	"	72	"	"	LD_2					"	"	IN	V_{IH2}			OUT	"	"	3Y	"	"	"	"	"	"	"
"	"	73	"	"	"					"	"	V_{IH2}	IN			OUT	"	"	3Y	"	"	"	"	"	"	"
"	"	74	"	"	"					"	"			IN	V_{IH2}	LD_2	OUT	"	4Y	"	"	"	"	"	"	"
"	"	75	"	"	"					"	"			V_{IH2}	IN	"	OUT	"	4Y	"	"	"	"	"	"	"
"	"	76	"	"	"					"	OUT			IN	V_{IH2}	"	LD_2	"	4$\overline{Y}$	"	"	"	"	"	"	"
"	"	77	"	"	"					"	OUT			V_{IH2}	IN	"	LD_2	"	4$\overline{Y}$	"	"	"	"	"	"	"
t_{TLH}	3004	78	"	OUT	LD_2	IN	V_{IH2}			"	LD_2					LD_2	LD_2	"	1Y	1.1	3.5	"	4.1	"	3.8	"
"	"	79	"	LD_2	OUT			IN	V_{IH2}	"	"					LD_2	"	"	2Y	"	"	"	"	"	"	"
"	"	80	"	"	LD_2					"	"	IN	V_{IH2}			OUT	"	"	3Y	"	"	"	"	"	"	"
"	"	81	"	"	"					"	"			IN	V_{IH2}	LD_2	OUT	"	4Y	"	"	"	"	"	"	"
"	"	82	"	"	"					"	OUT			V_{IH2}	IN	"	LD_2	"	4$\overline{Y}$	"	"	"	"	"	"	"
t_{THL}	"	83	"	OUT	"	IN	V_{IH2}			"	LD_2					"	"	"	1Y	"	"	"	"	"	"	"
"	"	84	"	LD_2	OUT			IN	V_{IH2}	"	"					"	"	"	2Y	"	"	"	"	"	"	"
"	"	85	"	"	LD_2					"	"	IN	V_{IH2}			OUT	"	"	3Y	"	"	"	"	"	"	"
"	"	86	"	"	"					"	"			IN	V_{IH2}	LD_2	OUT	"	4Y	"	"	"	"	"	"	"
"	"	87	"	"	"					"	OUT			V_{IH2}	IN	LD_2	LD_2	"	4$\overline{Y}$	"	"	"	"	"	"	"

TABLE III. Group A inspection for device type 02.

Symbol	MIL-STD-883 method	Cases E / F / 2	Test no.	For terminal conditions see table IV																Measured terminal	Limits: Subgroup 1 T_C = +25°C Min	Subgroup 1 Max	Subgroup 2 T_C +125°C Min	Subgroup 2 Max	Subgroup 3 T_C Min	Subgroup 3 Max	Units
				1 / 5 / 2	2 / 6 / 3	3 / 7 / 4	4 / 8 / 5	5 / 9 / 7	6 / 10 / 8	7 / 11 / 9	8 / 12 / 10	9 / 13 / 12	10 / 14 / 13	11 / 15 / 14	12 / 16 / 15	13 / 1 / 17	14 / 2 / 18	15 / 3 / 19	16 / 4 / 20								
				V_{CCO}	1Y	2Y	3Y	1B	2B	3B	V_{EE}	A	4B	5B	6B	4Y	5Y	6Y	V_{CC}								
V_{OH}	3006	1		GND	LD_1	LD_1	LD_1	V_{IH1}			E_1	V_{IH1}				LD_1	LD_1	LD_1	GND	1Y	-.930	-0.780	-.825	-.630	-1.080	-.880	V dc
		2							V_{IH1}											2Y							
		3								V_{IH1}										3Y							
		4											V_{IH1}							4Y							
		5												V_{IH1}						5Y							
		6													V_{IH1}					6Y							
V_{OL}	3007	7																		1Y	-1.85	-1.62	-1.82	-1.545	-1.92	-1.655	
		8																		2Y							
		9																		3Y							
		10																		4Y							
		11																		5Y							
		12																		6Y							
V_{OTH}		13						V_{ITH}				V_{IH1}								1Y	-.95		-.845		-1.1		
		14							V_{ITH}											2Y							
		15								V_{ITH}										3Y							
		16											V_{ITH}							4Y							
		17												V_{ITH}						5Y							
		18													V_{ITH}					6Y							
		19						V_{IH1}	V_{IH1}	V_{IH1}		V_{ITH}	V_{IH1}	V_{IH1}	V_{IH1}					1Y							
		20																		2Y							
		21																		3Y							
		22																		4Y							
		23																		5Y							
		24																		6Y							
V_{OTL}		25										V_{ITL}								1Y		-1.6	-	-1.525		-1.635	
		26																		2Y							
		27																		3Y							
		28																		4Y							
		29																		5Y							
		30																		6Y							
		31						V_{ITL}				V_{IH1}								1Y							
		32							V_{ITL}											2Y							
		33								V_{ITL}										3Y							
		34											V_{ITL}							4Y							
		35												V_{ITL}						5Y							
		36													V_{ITL}					6Y							
I_{IH1}	3010	37						V_{IH1}												1B		265		450		450	µA
		38							V_{IH1}											2B							
		39								V_{IH1}										3B							
		40											V_{IH1}							4B							
		41												V_{IH1}						5B							
		42													V_{IH1}					6B							
I_{IH2}		43										V_{IH1}								A		290		495		495	

TABLE III. Group A inspection for device type 02 - Continued.

For terminal Conditions see table IV

Symbol	MIL-STD-883 method	Cases E / F / 2	Test no.	1 / 5 / 2 V_{CCO}	2 / 6 / 3 1Y	3 / 7 / 4 2Y	4 / 8 / 5 3Y	5 / 9 / 7 1B	6 / 10 / 8 2B	7 / 11 / 9 3B	8 / 12 / 10 V_{EE}	9 / 13 / 12 A	10 / 14 / 13 4B	11 / 15 / 14 5B	12 / 16 / 15 6B	13 / 1 / 17 4Y	14 / 2 / 18 5Y	15 / 3 / 19 6Y	16 / 4 / 20 V_{CC}	Measured terminal	Limits Subgroup 1 T_C = +25°C Min	Subgroup 1 Max	Subgroup 2 T_C +125°C Min	Subgroup 2 Max	Subgroup 3 T_C = -55°C Min	Subgroup 3 Max	Units
I_{IL}	3009	44		GND				V_{IL1}			E_1								GND	1B	0.5		0.3		0.5		µA
	"	45		"					V_{IL1}		"								"	2B	"		"		"		"
	"	46		"						V_{IL1}	"								"	3B	"		"		"		"
	"	47		"							"		V_{IL1}						"	4B	"		"		"		"
	"	48		"							"			V_{IL1}					"	5B	"		"		"		"
	"	49		"							"				V_{IL1}				"	6B	"		"		"		"
	"	50		"							"	V_{IL1}							"	A	"		"		"		"
I_{EE}		51		"							"								"	V_{EE}	-49		-54		-54		mA

Symbol	MIL-STD-883 method	Test no.	1 V_{CCO}	2 1Y	3 2Y	4 3Y	5 1B	6 2B	7 3B	8 V_{EE}	9 A	10 4B	11 5B	12 6B	13 4Y	14 5Y	15 6Y	16 V_{CC}	Measured terminal	Limits Subgroup 9 T_C = +25°C Min	Subgroup 9 Max	Subgroup 10 T_C +125°C Min	Subgroup 10 Max	Subgroup 11 T_C = -55°C Min	Subgroup 11 Max	Units
t_{PLH}	3003	52	E_3	OUT	LD_2	LD_2	IN	IN		E_2	V_{IH2}				LD_2	LD_2	LD_2	E_3	1Y	1.1	4.0	1.0	4.7	1.0	4.3	ns
	"	53	"	LD_2	OUT	LD_2				"	"				"	"	"	"	2Y	"	"	"	"	"	"	"
	"	54	"	"	LD_2	OUT				"	"	IN			OUT	"	"	"	3Y	"	"	"	"	"	"	"
	"	55	"	"	"	LD_2				"	"		IN		LD_2	OUT	"	"	4Y	"	"	"	"	"	"	"
	"	56	"	"	"	"				"	"			IN	"	LD_2	OUT	"	5Y	"	"	"	"	"	"	"
	"	57	"	"	"	"				"	"				"	"	LD_2	"	6Y	"	"	"	"	"	"	"
	"	58	"	OUT	"	"	V_{IH2}			"	"	IN			"	"	"	"	1Y	"	5.0	"	5.9	"	5.4	"
	"	59	"	LD_2	OUT	"		V_{IH2}		"	"				"	"	"	"	2Y	"	"	"	"	"	"	"
	"	60	"	"	LD_2	OUT				"	"		V_{IH2}		"	"	"	"	3Y	"	"	"	"	"	"	"
	"	61	"	"	"	LD_2				"	"			V_{IH2}	OUT	"	"	"	4Y	"	"	"	"	"	"	"
	"	62	"	"	"	"				"	"				LD_2	OUT	"	"	5Y	"	"	"	"	"	"	"
	"	63	"	"	"	"				"	"				"	LD_2	OUT	"	6Y	"	"	"	"	"	"	"
t_{PHL}	"	64	"	OUT	"	"	IN	IN		"	V_{IH2}				"	"	LD_2	"	1Y	"	4.0	"	4.7	"	4.3	"
	"	65	"	LD_2	OUT	"				"	"				"	"	"	"	2Y	"	"	"	"	"	"	"
	"	66	"	"	LD_2	OUT				"	"	IN			"	"	"	"	3Y	"	"	"	"	"	"	"
	"	67	"	"	"	LD_2				"	"		IN		OUT	"	"	"	4Y	"	"	"	"	"	"	"
	"	68	"	"	"	"				"	"			IN	LD_2	OUT	"	"	5Y	"	"	"	"	"	"	"
	"	69	"	"	"	"				"	"				"	LD_2	OUT	"	6Y	"	"	"	"	"	"	"
	"	70	"	OUT	"	"	V_{IH2}			"	"	IN			"	"	"	"	1Y	"	5.0	"	5.9	"	5.4	"
	"	71	"	LD_2	OUT	"		V_{IH2}		"	"				"	"	"	"	2Y	"	"	"	"	"	"	"
	"	72	"	"	LD_2	OUT				"	"		V_{IH2}		"	"	"	"	3Y	"	"	"	"	"	"	"
	"	73	"	"	"	LD_2				"	"			V_{IH2}	OUT	"	"	"	4Y	"	"	"	"	"	"	"
	"	74	"	"	"	"				"	"				LD_2	OUT	"	"	5Y	"	"	"	"	"	"	"
	"	75	"	"	"	"				"	"				"	LD_2	OUT	"	6Y	"	"	"	"	"	"	"
t_{TLH}	3004	76	"	OUT	"	"	IN	IN		"	V_{IH2}				"	"	LD_2	"	1Y	"	4.5	"	5.3	"	4.9	"
	"	77	"	LD_2	OUT	"				"	"				"	"	"	"	2Y	"	"	"	"	"	"	"
	"	78	"	"	LD_2	OUT				"	"	IN			"	"	"	"	3Y	"	"	"	"	"	"	"
	"	79	"	"	"	LD_2				"	"		IN		OUT	"	"	"	4Y	"	"	"	"	"	"	"
	"	80	"	"	"	"				"	"			IN	LD_2	OUT	"	"	5Y	"	"	"	"	"	"	"
	"	81	"	"	"	"				"	"				"	LD_2	OUT	"	6Y	"	"	"	"	"	"	"
t_{THL}	"	82	"	OUT	LD_2	LD_2	IN	IN		"	"				"	"	LD_2	"	1Y	"	"	"	"	"	"	"
	"	83	"	LD_2	OUT	LD_2				"	"				"	"	"	"	2Y	"	"	"	"	"	"	"
	"	84	"	"	LD_2	OUT				"	"	IN			"	"	"	"	3Y	"	"	"	"	"	"	"
	"	85	"	"	"	LD_2				"	"		IN		OUT	"	"	"	4Y	"	"	"	"	"	"	"
	"	86	"	"	"	"				"	"			IN	LD_2	OUT	"	"	5Y	"	"	"	"	"	"	"
	"	87	"	"	"	"				"	"				"	LD_2	OUT	"	6Y	"	"	"	"	"	"	"

6. NOTES

6.1 Intended use. Microcircuits conforming to this specification are intended for use for Government microcircuit applications (original equipment) and logistic purposes.

TABLE IV. Test conditions for all devices, group A inspection.

Symbol	V_{IH1} (V)	V_{IL1} (V)	V_{IH2} (V)	V_{ITL} (V)	V_{ITH} (V)	E_1 (V)	E_2 (V)	E_3 (V)	LD_1	LD_2
T_C = +25°C	-0.780	-1.850	+1.11	-1.475	-1.105	-5.2	-3.2	+2.0	100Ω to -2 V	100Ω to GND
T_C = +125°C	-0.630	-1.820	+1.24	-1.400	-1.000	-5.2	-3.2	+2.0	100Ω to -2 V	100Ω to GND
T_C = -55°C	-0.880	-1.920	+1.01	-1.510	-1.255	-5.2	-3.2	+2.0	100Ω to -2 V	100Ω to GND

6.2 Ordering data. The acquisition document should specify the following:

a. Complete part number (see 1.2).

b. Requirements for delivery of one copy of the quality conformance inspection data pertinent to the device inspection lot to be supplied with each shipment by the device manufacturer, if applicable.

c. Requirements for certificate of compliance, if applicable.

d. Requirements for notification of change of product or process to the contracting activity in addition to notification to the qualifying activity, if applicable.

e. Requirements for failure analysis (including required test condition of method 5003 of MIL-STD-883), corrective action and reporting of results, if applicable.

f. Requirements for product assurance options.

g. Requirements for special carriers, lead lengths, or lead forming, if applicable. These requirements shall not affect the part number. Unless otherwise specified, these requirements shall not apply to direct purchase by or direct shipment to the Government.

h. Requirements for "JAN" marking.

6.3 Abbreviations, symbols, and definitions. The abbreviations, symbols, and definitions used herein are defined in MIL-M-38510, MIL-STD-1331, and as follows:

GND - - - - - - - - - - - - - - Ground zero voltage potential.
V_{OTH} - - - - - - - - - - - - - High-level threshold output voltage.
V_{OTL} - - - - - - - - - - - - - Low-level threshold output voltage.
V_{ITH} - - - - - - - - - - - - - High-level threshold input voltage.
V_{ITL} - - - - - - - - - - - - - Low-level threshold input voltage.
V_{EEL} - - - - - - - - - - - - - Shifted power supply voltage for the purpose of ac testing.

T_J - - - - - - - - - - - - - - -	Circuit junction temperature.
T_C - - - - - - - - - - - - - - -	Case operating temperature range.
P_D - - - - - - - - - - - - - - -	Circuit power dissipation.
θJ_A - - - - - - - - - - - - - - -	Junction-to-ambient thermal resistance in °C per watt.
θJ_C - - - - - - - - - - - - - - -	Junction-to-case thermal resistance in °C per watt.

6.4 Logistic support. Lead materials and finishes (see 3.3) are interchangeable. Unless otherwise specified, microcircuits acquired for Government logistic support will be acquired to device class B (see 1.2.2), lead material and finish C (see 3.3). Longer length leads and lead forming shall not affect the part number.

6.5 Substitutability. The cross-reference information below is presented for the convenience of users. Microcircuits covered by this specification will functionally replace the listed generic-industry type. Generic-industry microcircuit types may not have equivalent operational performance characteristics across military temperature ranges or reliability factors equivalent to MIL-M-38510 device types and may have slight physical variations in relation to case size. The presence of this information shall not be deemed as permitting substitution of generic-industry types for MIL-M-38510 types or as a waiver of any of the provisions of MIL-M-38510.

6.6 Test limit compensation examples.

a. A device which has a power dissipation of 100 mW in case F is to be tested under a zero air flow condition. On figure 5 ΔT_J between 500 ft/min and zero air flow is +4°C. In order to adjust the various parameter limits, use figure 7 which defines the limit adjustment coefficients for ΔT_J. To adjust V_{OH}(max) at -55°C, use the $+\Delta T_J$ column of the -55°C portion of figure 7 and locate the coefficient corresponding to V_{OH}(max). This value is 1.25 mV/°C. Multiply the ΔT_J by the coefficient and algebraically add it to the -55°C V_{OH}(max) limit from table III.

$$V_{OH}(\max)\ (\text{adjusted limits}) = (+4^\circ\text{C} \times 1.25\ \text{mV}/^\circ\text{C}) + (-880\ \text{mV})$$
$$= 5\ \text{mV} - 880\ \text{mV} = -875\ \text{mV}$$
$$\text{Use } -875\ \text{mV}$$

Follow the same procedure to adjust the remaining parameters at -55°C as well as all parameters at +25°C and +125°C.

b. A device with a power dissipation of 150 mW in case E is to be tested at an air flow of 200 linear ft/min and the 25°C testing is to be accomplished at a case temperature of +20°C. On figure 5 ΔT_J due to air flow is +3°C. The ΔT_J due to case temperature change is -5°C (25-20). Therefore the total ΔT_J = -5°C +3°C = -2°C. Using figure 7, find the +25°C, $-\Delta T_J$ column. To adjust V_{OL}(max) locate the limit coefficient corresponding to V_{OL}(max) for a negative ΔT_J, this value is 0.44 mV°C. Multiply the ΔT_J by the coefficient and algebraically add it to the +25°C V_{OL}(max) limit from table III.

$$V_{OL}(\max)\ (\text{adjusted limit}) = (-2^\circ\text{C}) \times (0.44\ \text{mV}/^\circ\text{C}) + (-1620\ \text{mV})$$
$$= -.88\ \text{mV} - 1620\ \text{mV} = -1621.88\ \text{mV}$$
$$\text{Use } -1621\ \text{mV}$$

Follow the same procedure to adjust the remaining parameters at +25°C.

6.7 Changes from previous issue. Asterisks are not used in this revision to identify changes with respect to the previous issue, due to the extensiveness of the changes.

Custodians:
Army - ER
Navy - EC
Air Force - 17

Review activities:
Army - AR, MI
Navy - SH, OS, TD
Air Force - 11, 19, 85, 99
DLA - ES

User activities:
Army - SM
Navy - AS, CG, MC

Agent:
DLA - ES

Preparing activity:
Air Force - 17

(Project 5962-0784-3)