MIL-M-38510/63A
17 JUNE 1985
SUPERSEDING
MIL-M-38510/63(USAF)
14 July 1978

# MILITARY SPECIFICATION

# MICROCIRCUITS, DIGITAL, ECL, QUAD TRANSLATOR, MONOLITHIC SILICON

This specification is approved for use by all Departments and Agencies of the Department of Defense.

## 1. SCOPE

1.1 Scope. This specification covers the detail requirements for monolithic silicon, ECL, logic gating microcircuits. Two product assurance classes and a choice of case outlines and lead finishes are provided and are reflected in the complete part number.

1.2 Part number. The part number shall be in accordance with MIL-M-38510.

1.2.1 Device types. The device types shall be as follows:

| Device type | Circuit |
|---|---|
| 01 | Quad translator, TTL to ECL |
| 02 | Quad translator, ECL to TTL |

1.2.2 Device class. The device class shall be the product assurance level as defined in MIL-M-38510.

1.2.3 Case outlines. The case outlines shall be designated as follows:

| Outline letter | Case outline (see MIL-M-38510, appendix C) |
|---|---|
| E | D-2 (16 pin, 1/4" X 7/8"), dual-in-line package |
| F | F-5 (16 pin, 1/4" X 3/8"), flat-package |

1.3 Absolute maximum ratings.

| | |
|---|---|
| Supply voltage range | 0 V dc to -7.0 V dc for $V_{EE}$<br>0 V dc to +7.0 V dc for $V_{CC}$ |
| Input voltage range | |
| Device type 01 | +5.0 V dc to GND |
| Device type 02 | GND to $V_{EE}$ |
| Storage temperature range | -65°C to +150°C |
| Maximum power dissipation ($P_D$) per gate 1/ | |
| Device type 01 | 145 mW |
| Device type 02 | 130 mW |
| Lead temperature (soldering, 10 seconds) | +260°C |
| Thermal resistance, junction-to-case ($\theta_{JC}$): | |
| Cases E and F | See MIL-M-38510, appendix C. |
| Case 2 | 0.08°C/W 2/ |
| Junction temperature ($T_J$) | +165°C 3/ |
| Maximum output current | |
| Device type 01 | -50 mA |
| Device type 02 | +24 mA |

1/ Must withstand the added $P_D$ due to short circuit test (e.g., $I_{OS}$).
2/ When a thermal resistance value is included in MIL-M-38510, appendix C, it shall supersede the value stated herein.
3/ Maximum junction temperature shall not be exceeded except for allowable short duration burn-in screening conditions per method 5004 of MIL-STD-883.

Beneficial comments (recommendations, additions, deletions) and any pertinent data which may be of use in improving this document should be addressed to: Rome Air Development Center (RBE-2), Griffiss AFB, NY 13441, by using the self-addressed Standardization Document Improvement Proposal (DD Form 1426) appearing at the end of this document or by letter

FSC 5962

DISTRIBUTION STATEMENT A. Approved for public release; distribution is unlimited.

1.4 Recommended operating conditions.

| | |
|---|---|
| Supply voltage ($V_{CC}$) - - - - - - - - - - - - - | -5.46 V minimum to +5.5 V maximum |
| Minimum high-level input voltage ($V_{IH}$) - - - | -1.105 V at $T_A$ = +25°C (ECL), 2.0 V (TTL) |
| (at 500 linear ft/min) | -1.000 V at $T_A$ = +125°C (ECL), 2.0 V (TTL) |
| (ft/min) | -1.255 V at $T_A$ = -55°C (ECL), 2.0 V (TTL) |
| Maximum low-level input voltage ($V_{IL}$) - - - | -1.475 V at $T_A$ = +25°C (ECL), 0.8 V (TTL) |
| (at 500 linear ft/min) | -1.400 V at $T_A$ = +125°C (ECL), 0.8 V (TTL) |
| | -1.510 V at $T_A$ = -55°C (ECL), 0.8 V (TTL) |
| Normalized fanout (each output) - - - - - - | 10 4/ |
| Case operating temperature range ($T_C$) - - - (at 500 linear ft/min) | -55°C to +125°C |
| Case operating temperature range ($T_C$) (at still air) | |
| Device type 01 - - - - - - - - - - - - - - | -55°C to +105°C (case E) |
| | -55°C to +115°C (case F) |
| Device type 02 - - - - - - - - - - - - - - | -55°C to +115°C (case E) |
| | -55°C to +120°C (case F) |

2. APPLICABLE DOCUMENTS

2.1 Government specifications and standards. Unless otherwise specified, the following specifications and standards, of the issue listed in that issue of the Department of Defense Index of Specifications and Standards specified in the solicitation, form a part of this specification to the extent specified herein.

SPECIFICATION

MILITARY

MIL-M-38510 - Microcircuits, General Specification for.

STANDARD

MILITARY

MIL-STD-883 - Test Methods and Procedures for Microelectronics.

(Copies of specifications, standards, handbooks, drawings, and publications required by manufacturers in connection with specific acquisition functions should be obtained from the contracting activity or as directed by the contracting officer.)

2.2 Order of precedence. In the event of a conflict between the text of this specification and the references cited herein, the text of this specification shall take precedence.

3. REQUIREMENTS

3.1 Detail specification. The individual item requirements shall be in accordance with MIL-M-38510, and as specified herein.

3.2 Design, construction, and physical dimensions. The design, construction, and physical dimensions shall be as specified in MIL-M-38510 and herein.

3.2.1 Logic diagram and terminal connections. The logic diagram and terminal connections shall be as specified on figure 1.

3.2.2 Truth tables and logic equations. The truth tables and logic equations shall be specified on figure 2.

4/ Device will fanout in both high and low levels to the specified number of data inputs on the same device type as that being tested.

3.2.3 Schematic circuits. Schematic circuits shall be submitted to the preparing activity prior to inclusion of a manufacturer's device in this specification and shall be submitted to the qualifying activity and agent activity (DESC-ECS) as a prerequisite for qualification. All qualified manufacturers' schematics shall be maintained by the agent activity and will be available upon request.

3.2.4 Case outlines. The case outlines shall be as specified in 1.2.3.

3.3 Lead material and finish. The lead material and finish shall be in accordance with MIL-M-38510 (see 6.4).

3.4 Electrical performance characteristics. The electrical performance characteristics are as specified in table I, and apply over the full recommended case operating temperature range, unless otherwise specified.

TABLE I. Electrical performance characteristics.

(Limits are valid provided circuit is in a test socket and transverse air flow of 500 linear ft/min is maintained.)

| Test | Symbol | Conditions 1/ 2/ $-55^\circ C \le T_C \le +125^\circ C$ | | | | Device type | Limits Min | Limits Max | Units |
|---|---|---|---|---|---|---|---|---|---|
| | | | $T_C$ | $V_{IH1}$ | $V_{IL1}$ | | | | |
| High level output voltage | $V_{OH}$ | $V_{EE}$ = -5.2 V<br>$V_{CC}$ = +5.0 V<br>Load = 100Ω to -2 V | +25°C | +2.4 V | +0.4 V | 01 | -0.930 | -0.780 | V |
| | | | +125°C | +2.4 V | +0.4 V | | -0.825 | -0.630 | |
| | | | -55°C | +2.4 V | +0.4 V | | -1.080 | -0.880 | |
| | | $V_{EE}$ = -5.2 V<br>$V_{CC}$ = +5.0 V<br>Load = -2 mA | +25°C | -0.780 | -1.850 V | 02 | 2.5 | --- | V |
| | | | +125°C | -0.630 | -1.820 V | | 2.5 | --- | |
| | | | -55°C | -0.880 | -1.920 V | | 2.5 | --- | |
| | | | $T_C$ | $V_{IH1}$ | $V_{IL1}$ | | | | |
| Low level output voltage | $V_{OL}$ | $V_{EE}$ = -5.2 V<br>$V_{CC}$ = +5.0 V<br>Load = 100Ω to -2 V | +25°C | +2.4 V | +0.4 V | 01 | -1.850 | -1.620 | V |
| | | | +125°C | +2.4 V | +0.4 V | | -1.820 | -1.545 | |
| | | | -55°C | +2.4 V | +0.4 V | | -1.920 | -1.655 | |
| | | $V_{EE}$ = -5.2 V<br>$V_{CC}$ = +5.0 V<br>Load = +12 mA | +25°C | -0.780 | -1.850 V | 02 | --- | 0.5 | V |
| | | | +125°C | -0.630 | -1.820 V | | --- | 0.5 | |
| | | | -55°C | -1.880 | -1.920 V | | --- | 0.5 | |
| | | | $T_C$ | $V_{ITH}$ | $V_{ITL}$ | | | | |
| High level threshold output voltage | $V_{OTH}$ | $V_{EE}$ = -5.2 V<br>$V_{CC}$ = +5.0 V<br>Load = 100Ω to -2 V | +25°C | +1.8 | +1.0 | 01 | -0.950 | --- | V |
| | | | +125°C | +1.8 | +0.80 | | -0.845 | --- | |
| | | | -55°C | +2.0 | +1.1 | | -1.100 | --- | |
| | | $V_{EE}$ = -5.2 V<br>$V_{CC}$ = +5.0 V<br>Load = -2 mA | +25°C | -1.105 V | -1.475 V | 02 | 2.5 | --- | V |
| | | | +125°C | -1.000 V | -1.400 V | | 2.5 | --- | |
| | | | -55°C | -1.255 V | -1.510 V | | 2.5 | --- | |
| | | | $T_C$ | $V_{ITH}$ | $V_{ITL}$ | | | | |
| Low level threshold output voltage | $V_{OTL}$ | $V_{EE}$ = -5.2 V<br>$V_{CC}$ = 0 V<br>Load = 100Ω to -2 V | +25°C | +1.8 | +1.10 | 01 | --- | -1.600 | V |
| | | | +125°C | +1.8 | +0.80 | | --- | -1.525 | |
| | | | -55°C | +2.0 | +1.10 | | --- | -1.635 | |
| | | $V_{EE}$ = -5.2 V<br>$V_{CC}$ = +5.0 V<br>Load = -12 mA | +25°C | -1.105 V | -1.475 V | 02 | --- | 0.5 | V |
| | | | +125°C | -1.000 V | -1.400 V | | --- | 0.5 | |
| | | | -55°C | -1.255 V | -1.510 V | | --- | 0.5 | |
| Low level output voltage inputs floating | $V_{OLS}$ | $V_{EE}$ = -5.2 V<br>$V_{CC}$ = +5.0 V | | | | 02 | --- | 0.5 | V |
| Bias voltage | $V_{BB}$ | | +25°C | | | 02 | -1.35 | -1.23 | V |
| | | | +125°C | | | | -1.24 | -1.12 | |
| | | | -55°C | | | | -1.44 | -1.32 | |

See footnotes at end of table

TABLE I. Electrical performance characteristics - Continued.

(Limits are valid provided circuit is in a test socket and transverse air flow of 500 linear ft/min is maintained.)

| Test | Symbol | Conditions 1/ 2/ $-55°C \leq T_C \leq +125°C$ | | Device type | Limits Min | Limits Max | Units |
|---|---|---|---|---|---|---|---|
| Input clamp voltage | $V_{IC}$ | $V_{EE}$ = -5.2 V<br>$V_{CC}$ = +5.0 V | | 01 | -1.5 | --- | V |
| High level input current | $I_{IH1}$ | $V_{CC}$ = +5.0 V<br>$V_{EE}$ = -5.2 V | | 01 | --- | 50 | µA |
| | | | | 02 | | 196 | |
| High level input current | $I_{IH2}$ | $V_{CC}$ = +5.0 V<br>$V_{EE}$ = -5.2 V | | 02 | --- | 200 | µA |
| Input leakage current | $I_{CBO}$ | $V_{EE}$ = -5.2 V<br>$V_{CC}$ = +5.0 V | | 02 | -1.5 | --- | µA |
| Short circuit current | $I_{OS}$ | $V_{EE}$ = -5.2 V<br>$V_{CC}$ = +5.0 V | $T_C$ | 02 | | | mA |
| | | | +25°C | | -40 | -100 | |
| | | | +125°C | | -35 | -100 | |
| | | | -55°C | | -40 | -100 | |
| Low level input current | $I_{IL1}$ | $V_{CC}$ = +5.0 V<br>$V_{EE}$ = -5.2 V | All other inputs | 01 | -3.2 | --- | mA |
| | $I_{IL2}$ | $V_{CC}$ = +5.0 V<br>$V_{EE}$ = -5.2 V | B input 3/ | 01 | -12.8 | --- | mA |
| Low level positive supply current | $I_{CCL}$ | $V_{CC}$ = +5.0 V<br>$V_{EE}$ = -5.2 V | | 01 | --- | 25 | mA |
| | | | | 02 | --- | 39 | |
| High level positive supply | $I_{CCH}$ | $V_{EE}$ = -5.2 V<br>$V_{CC}$ = +5.0 V | | 01 | --- | 18 | mA |
| | | | | 02 | --- | 57 | |
| Power supply draw current | $I_{EE}$ | $V_{EE}$ = -5.2 V<br>$V_{CC}$ = +5.0 V | | 01 | -73 | --- | mA |
| | | | | 02 | -44 | --- | |
| Input breakdown voltage | $BV_{IN}$ | $V_{EE}$ = -5.2 V<br>$V_{CC}$ = +5.0 V | $I_{IN}$ = 1 mA | 01 | 5.5 | --- | V |
| Transition time, low-to-high level | $t_{TLH}$ | $V_{EEL}$ = -3.2 V $V_{CCH}$ = +7.0 V $V_{GG}$ = +2.0 V<br>Load = 100Ω to GND | | 01 | 1.0 | 5.0 | ns |
| | | $V_{EE}$ = -5.2 V $V_{CC}$ = +5.0 V<br>Load = 450Ω 25 pF | | 02 | --- | 5.3 | ns |
| Transition time, high-to-low level | $t_{THL}$ | $V_{EEL}$ = -3.2 V $V_{CCH}$ = +7.0 V $V_{GG}$ = +2.0 V<br>Load = 100Ω to GND | | 01 | 1.0 | 5.0 | ns |
| | | $V_{EE}$ = -5.2 V $V_{CC}$ = +5.0 V<br>Load = 450Ω 25 pF | | 02 | --- | 5.3 | ns |

See footnotes at end of table

TABLE I. Electrical performance characteristics - Continued.

(Limits are valid provided circuit is in a test socket and transverse air flow of 500 linear ft/min is maintained.)

| Test | Symbol | Conditions 1/ 2/ $-55°C \leq T_C \leq +125°C$ | Device type | Limits Min | Limits Max | Units |
|---|---|---|---|---|---|---|
| Propagation delay time, low-to-high level | $t_{PLH}$ | $V_{EEL}$ = -3.2 V $V_{CCH}$ = +7.0 V $V_{GG}$ = +2.0 V Load = 100Ω to GND | 01 | 1.0 | 8.0 | ns |
| | | $V_{EE}$ = -5.2 V $V_{CC}$ = +5.0 V Load = 450Ω 25 pF | 02 | 1.0 | 7.0 | ns |
| Propagation delay time, high-to-low level | $t_{PHL}$ | $V_{EEL}$ = -3.2 V $V_{CCH}$ = +7.0 V $V_{GG}$ = +2.0 V Load = 100Ω to GND | 01 | 1.0 | 8.0 | ns |
| | | $V_{EE}$ = -5.2 V $V_{CC}$ = +5.0 V Load = 450Ω 25 pF | 02 | 1.0 | 7.0 | ns |

1/ Complete terminal conditions shall be as specified in table III.
2/ For voltages, the minimum and maximum limits are based on algebraic values. For currents, the minimum and maximum limits are determined by absolute value where the sign is only an indication of conventional current direction (i.e., current into terminal is positive).
3/ Applicable to "B" inputs only.

3.5 Electrical test requirements. The electrical test requirements for each device class shall be the subgroups specified in table II. The electrical tests for each subgroup are described in table III.

TABLE II. Electrical test requirements.

| MIL-STD-883 test requirements | Subgroups (see table III) Class S devices | Class B devices |
|---|---|---|
| Interim electrical parameters (pre burn-in) (method 5004) | 1 | 1 |
| Final electrical test parameters (method 5004) | 1*, 2, 3, 9 10, 11 | 1*, 2, 3, 9 |
| Group A test requirements (method 5005) | 1, 2, 3, 9 10, 11 | 1, 2, 3, 9 |
| Group B test requirements (method 5005) subgroup 5 | 1, 2, 3, 9 10, 11 | N/A |
| Group C end-point electrical parameters (method 5005) | N/A | 1, 2, 3 |
| Additional electrical subgroups for group C periodic inspections | None | 10, 11 |
| Group D end-point Electrical parameters (method 5005) | 1, 2, 3 | 1, 2, 3 |

*PDA applies to subgroup 1 (see 4.3c).

3.6 Marking. Marking shall be in accordance with MIL-M-38510.

3.7 Microcircuit group assignment. The devices covered by this specification shall be in microcircuit group number 30 (see MIL-M-38510, appendix E).

4. QUALITY ASSURANCE PROVISIONS

4.1 Sampling and inspection. Sampling and inspection procedures shall be in accordance with MIL-M-38510 and methods 5005 and 5007, as applicable, of MIL-STD-883, except as modified herein.

4.2 Qualification inspection. Qualification inspection shall be in accordance with MIL-M-38510. Inspections to be performed shall be those specified in method 5005 of MIL-STD-883 and herein for groups A, B, C, and D inspections (see 4.4.1, through 4.4.4).

4.3 Screening. Screening shall be in accordance with method 5004 of MIL-STD-883, and shall be conducted on all devices prior to qualification and quality conformance inspection. The following additional criteria shall apply:

a. Burn-in (method 1015 of MIL-STD-883).

(1) Test condition D or E using the circuit shown on figure 3, or equivalent.

(2) $T_A$ = +125°C minimum.

b. Interim and final electrical test parameters shall be as specified in table II, except interim electrical parameters test prior to burn-in is optional at the discretion of the manufacturer.

c. The percent defective allowable (PDA) shall be as specified in MIL-M-38510.

4.4 Quality conformance inspection. Quality conformance inspection shall be in accordance with MIL-M-38510. Inspections to be performed shall be those specified in method 5005 of MIL-STD-883 and herein for groups A, B, C, and D inspections (see 4.4.1 through 4.4.4).

4.4.1 Group A inspection. Group A inspection shall be in accordance with table I of method 5005 of MIL-STD-883 and as follows:

a. Test requirements shall be as specified in table II herein.

b. Subgroups 4, 5, 6, 7, and 8 shall be omitted.

4.4.2 Group B inspection. Group B inspection shall be in accordance with table II of method 5005 of MIL-STD-883. Electrical test requirements shall be as specified in table II herein.

4.4.3 Group C inspection. Group C inspection shall be in accordance with table III of method 5005 of MIL-STD-883 and as follows:

a. End-point electrical parameters shall be as specified in table II.

b. Steady-state life test (method 1005 of MIL-STD-883) conditions, or equivalent.

(1) Test condition D or E using the circuit shown on figure 3, or equivalent.

(2) $T_A$ = +125°C minimum.

(3) Test duration: 1,000 hours, except as permitted in method 1005 of MIL-STD-883.

c. Subgroups 3 and 4 shall be added to the group C inspection requirements for class B devices and shall consist of the tests, conditions, and limits specified for subgroups 10 and 11 of group A.

Device type 01

Case F

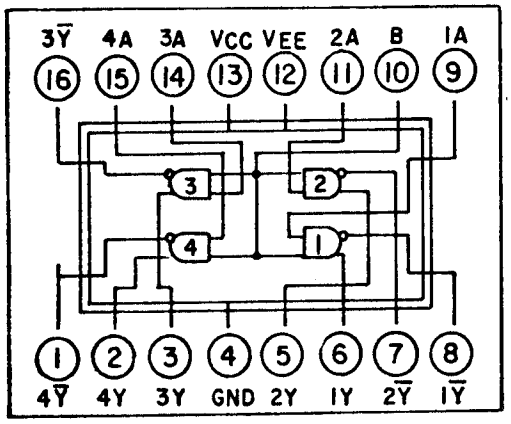


Case E

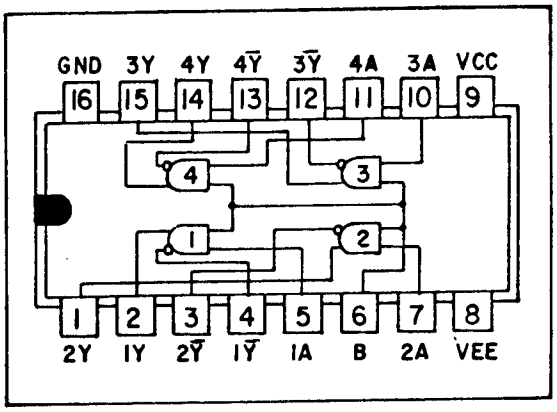


Device type 02

Case F

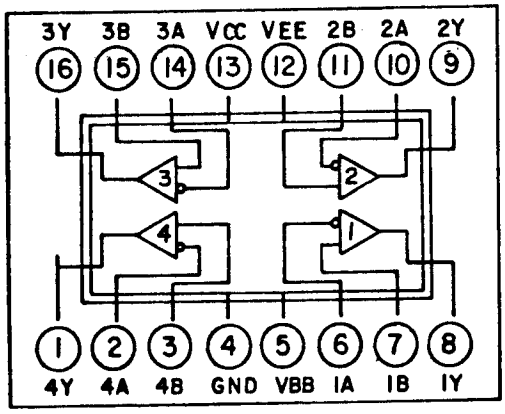


Case E

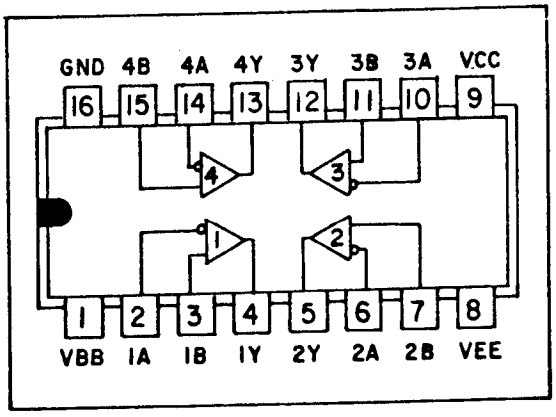


FIGURE 1. Logic diagrams and terminal connections.

Device type 01

Case 2

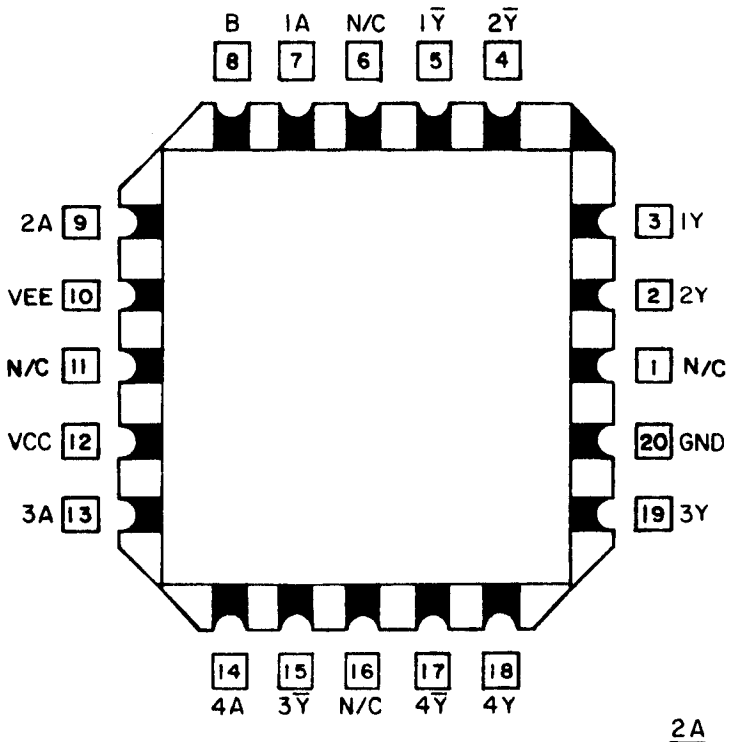


Device type 02

Case 2

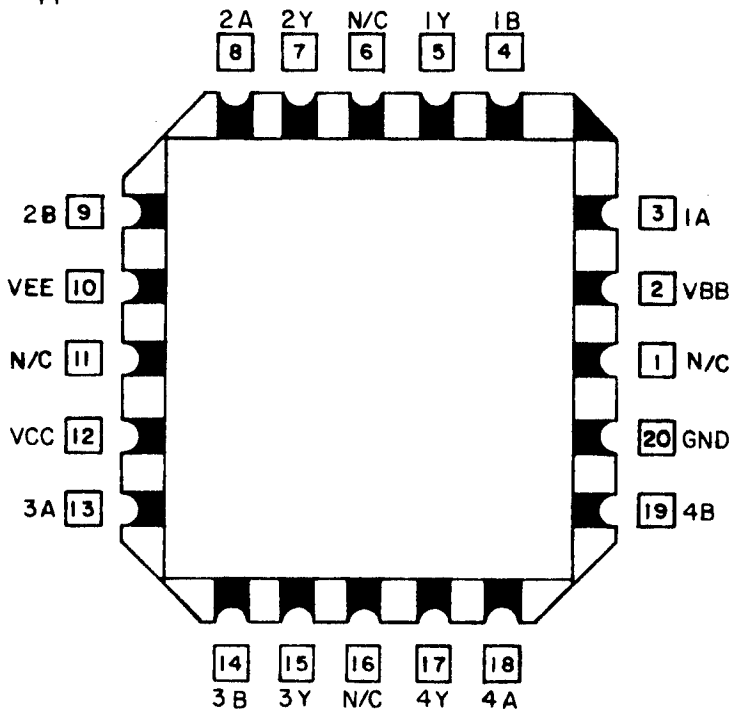


FIGURE 1. Terminal connections (top view).

Device type 01

| Truth table each gate | | | |
|---|---|---|---|
| Input | | Output | |
| A | B | Y | $\overline{Y}$ |
| L | L | L | H |
| H | L | L | H |
| L | H | L | H |
| H | H | H | L |

Device type 02

| TRUTH TABLE | | |
|---|---|---|
| Input | | Output |
| A | B | Y |
| L | L | * |
| L | H | H |
| H | L | L |
| H | $V_{BB}$ | L |
| L | $V_{BB}$ | H |
| Open | Open | L |
| $V_{BB}$ | H | H |
| $V_{BB}$ | L | L |
| H | H | * |

*Not defined

FIGURE 2. Truth tables.

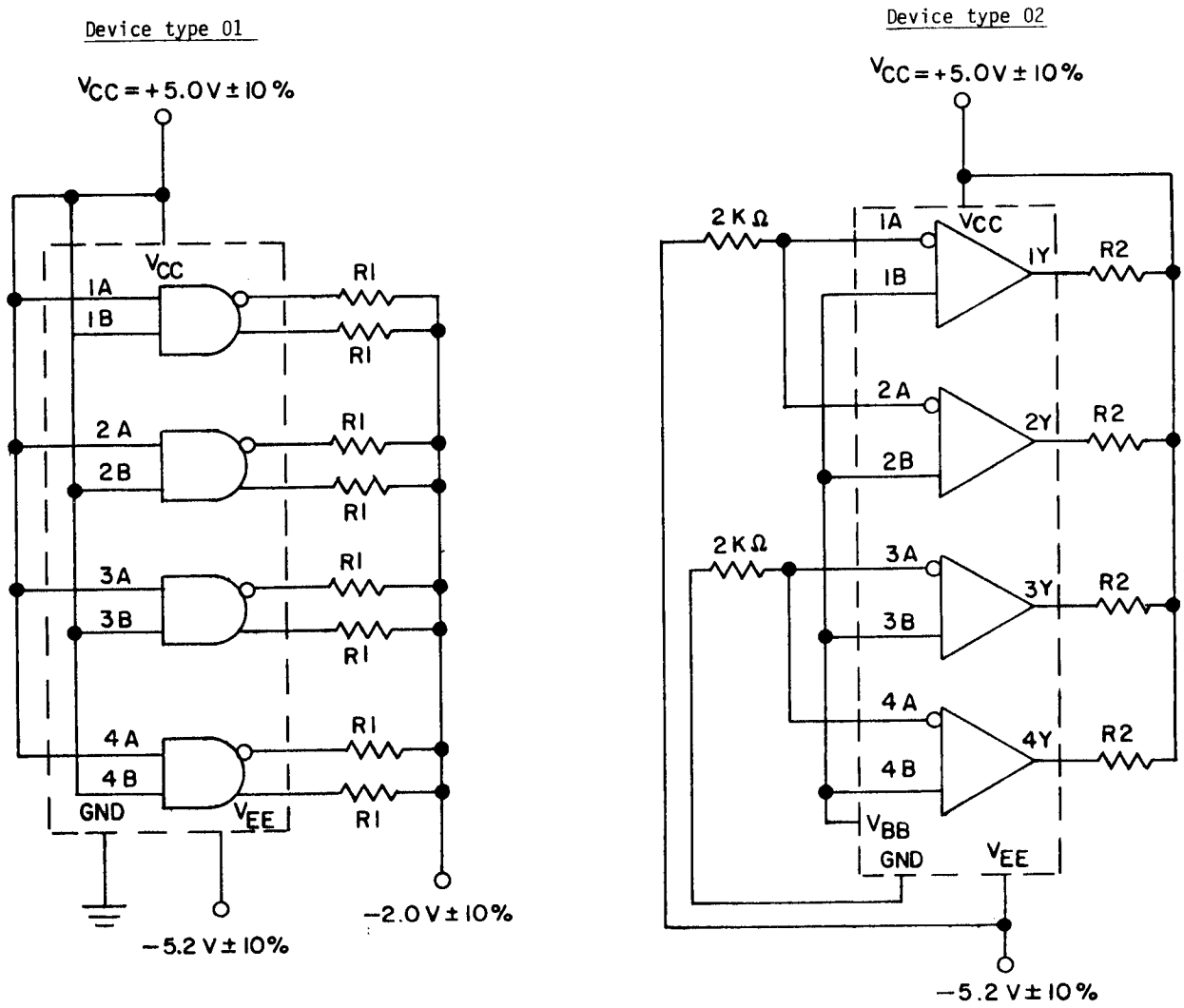


NOTES:
1. $R_L$ = 50Ω ±5% and $R_2$ = 360Ω ±5%.
2. Resistors are rated at 88 mW at 125°C and 150 mW at 150°C.

FIGURE 3. Burn-in and life test circuits.

GENERATOR CHARACTERISTICS

$Z_{out} \approx 50\Omega$
$t_p$ = 40 ns ±2 ns
$t_{THL}$ = 5.5 ns (10%-90%) ±0.5 ns
$t_{TLH}$ = 5.5 ns (10%-90%) ±0.5 ns

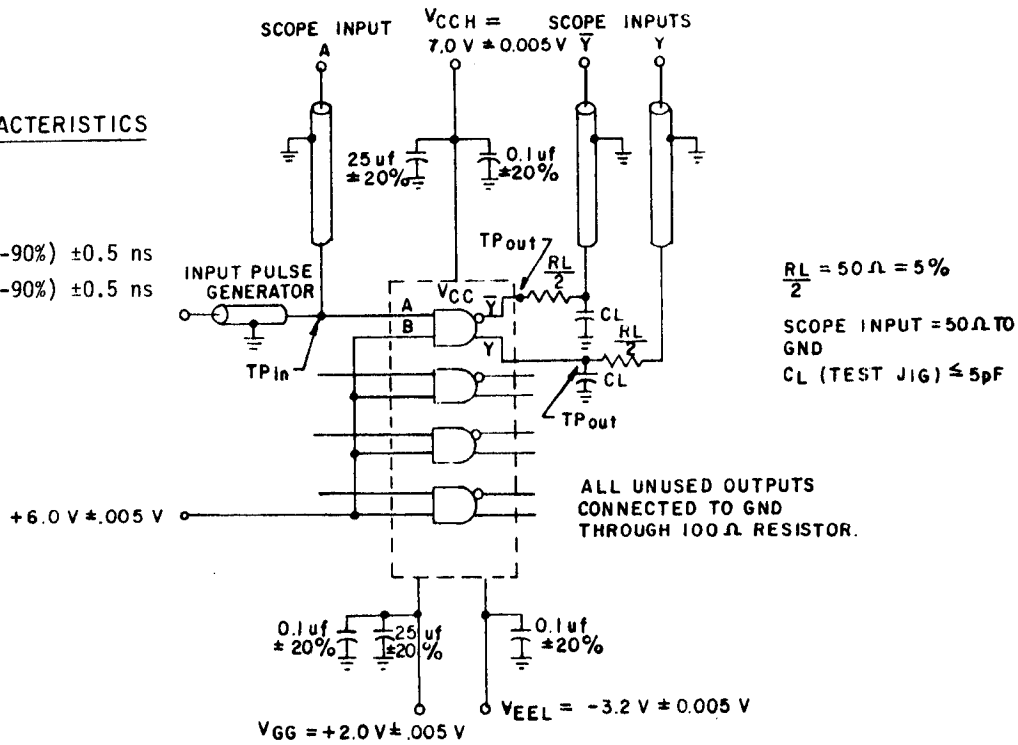


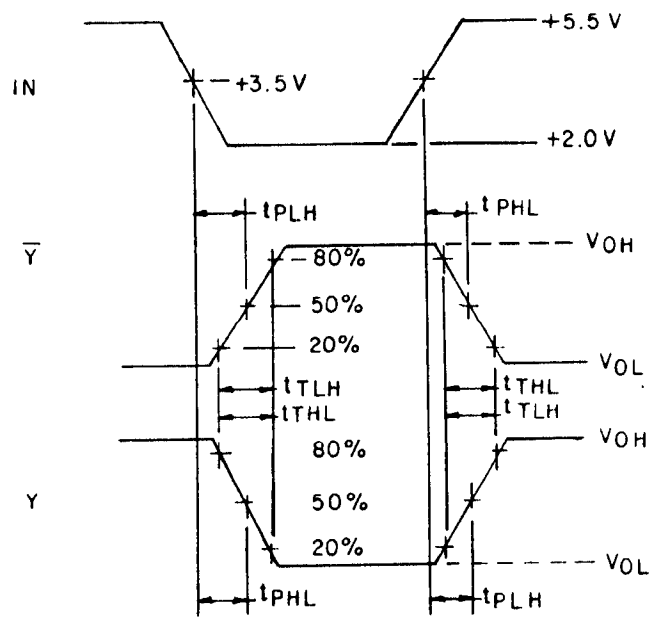


NOTES:
1. Perform test in accordance with test table; each output is tested separately.
2. All input and output cables are equal lengths of 50 ohm coaxial cables. Wire length should be ≤ .250 inch (6.35 mm) from $t_p$ in to input pin and TP out to output pin.
3. Outputs not under test connected to a 100 ohm resistor to ground.

FIGURE 4. Switching test circuit for device type 01.

GENERATOR CHARACTERISTICS

| $T_C$ | VIHS | VILS |
|---|---|---|
| 25°C | -0.890 V | -1.690 V |
| 125°C | | |
| -55°C | | |

$Z_{out} \approx 50\Omega$
$t_{THL}$ = 2.0 ns (20%-80%) ±0.2 ns
$t_{TLH}$ = 2.0 ns (20%-80%) ±0.2 ns
$t_p$ = 40 ns ±1.0 ns

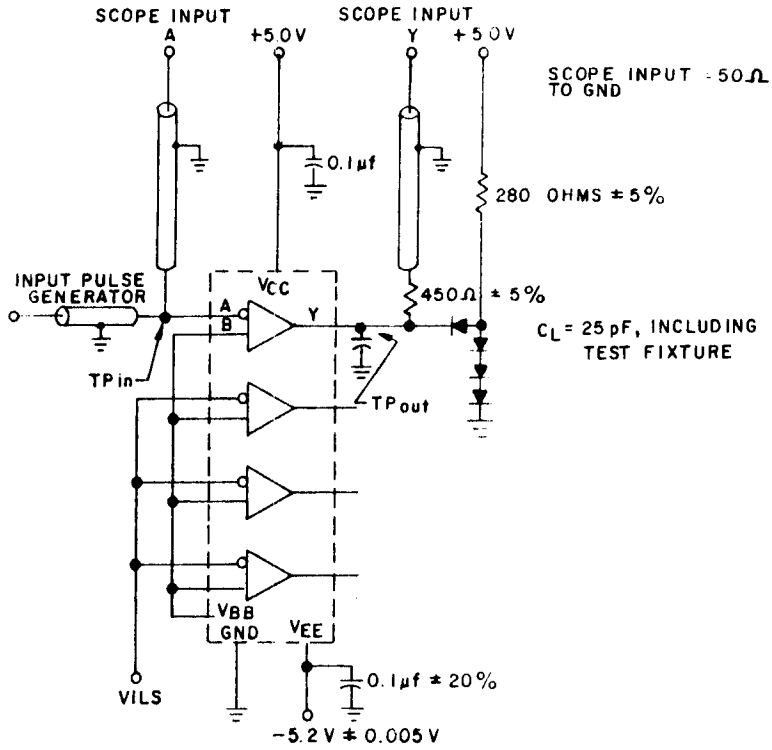


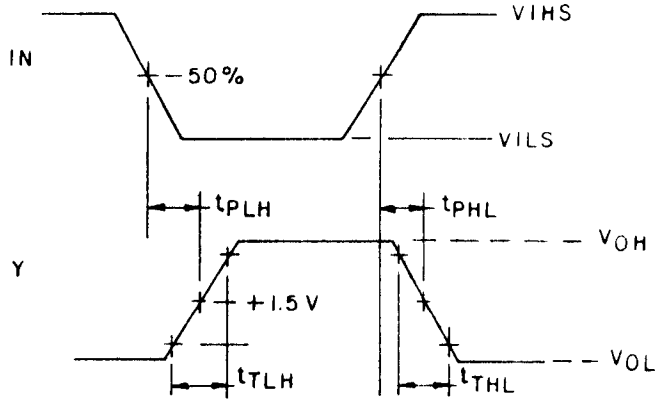


NOTES:
1. Perform test in accordance with test table; each output is tested separately.
2. All input and output cables are equal lengths of 50 ohm coaxial cables. Wire length should be ≤ .250 inch (6.35 mm) from $t_p$ in to input pin and TP out to output pin.
3. All diodes are 1N3064 or equivalent.

FIGURE 5. Switching test circuit for device type 02.

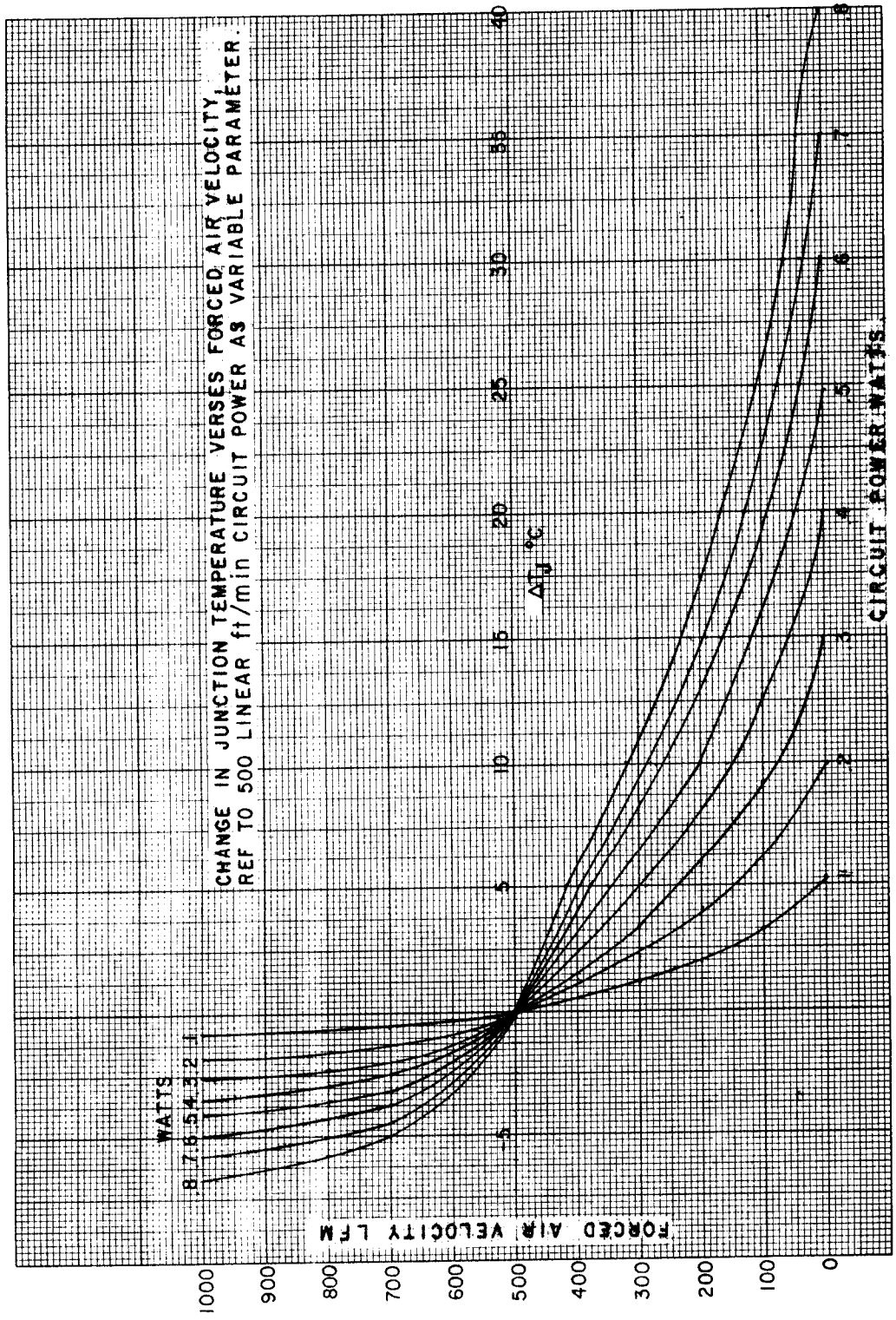


(Case E)

FIGURE 6. Junction temperature -vs- forced air velocity.

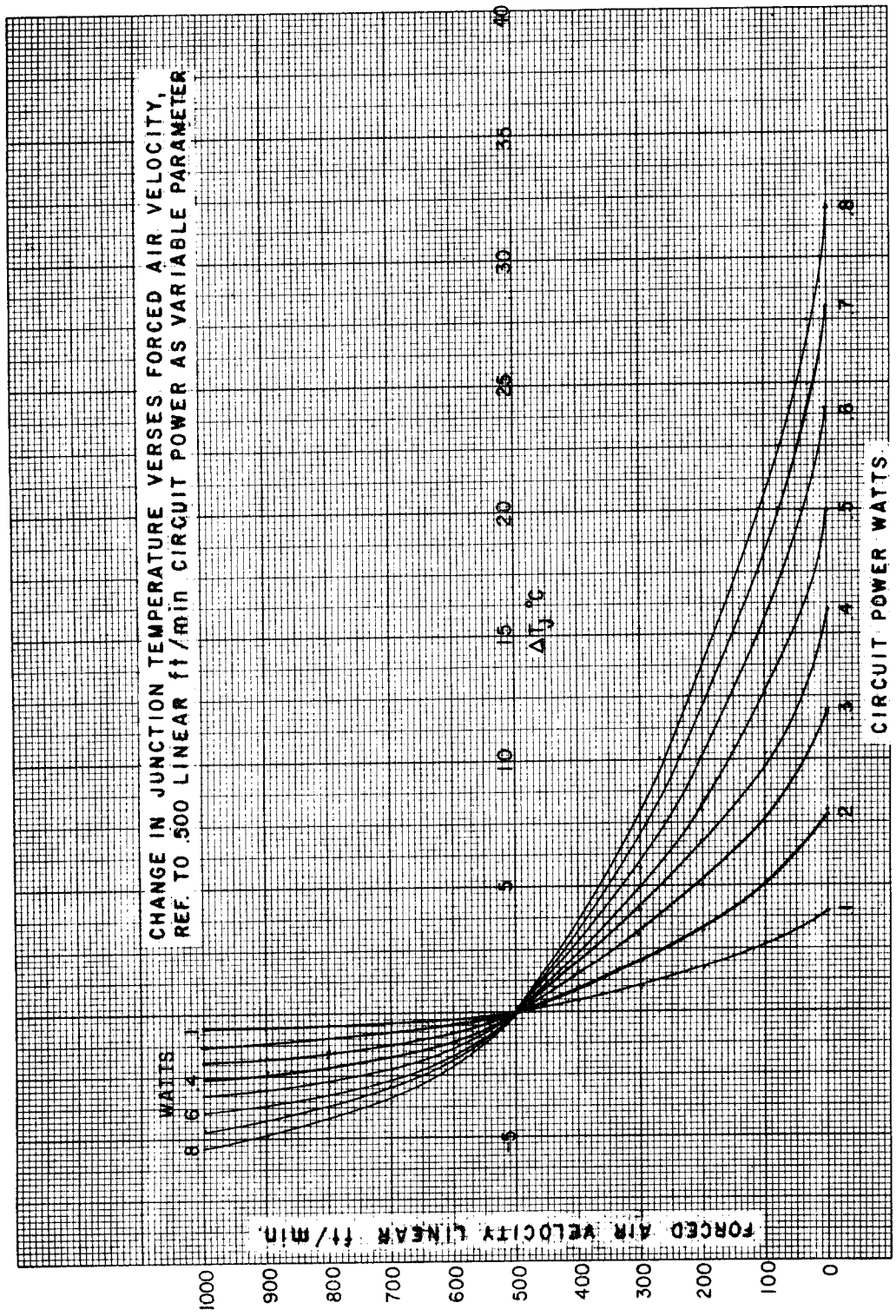


(Case F)

FIGURE 7. Junction temperature -vs- forced air velocity.

| | -55°C (mV/°C) | | +25°C (mV/°C) | | +125°C (mV/°C) | |
|---|---|---|---|---|---|---|
| PARAMETER | $+\Delta T_J$ | $-\Delta T_J$ | $+\Delta T_J$ | $-\Delta T_J$ | $+\Delta T_J$ | $-\Delta T_J$ |
| $V_{OH}$ max, $V_{IH_1}$ | 1.25 | 1.25 | 1.50 | 1.25 | 1.50 | 1.50 |
| $V_{OH}$ min, $V_{OTH}$ | 1.88 | 1.88 | 1.05 | 1.88 | 1.05 | 1.05 |
| $V_{OL}$ max, $V_{OTL}$ | 0.44 | 0.44 | 0.75 | 0.44 | 0.75 | 0.75 |
| $V_{OL}$ min, $V_{IL}$ | 0.88 | 0.88 | 0.30 | 0.88 | 0.30 | 0.30 |
| $V_{ITH}$ | 1.88 | 1.88 | 1.05 | 1.88 | 1.05 | 1.05 |
| $V_{ITL}$ | 0.44 | 0.44 | 0.75 | 0.44 | 0.75 | 0.75 |

FIGURE 8. Adjustment coefficients for forcing function and test limit compensation.

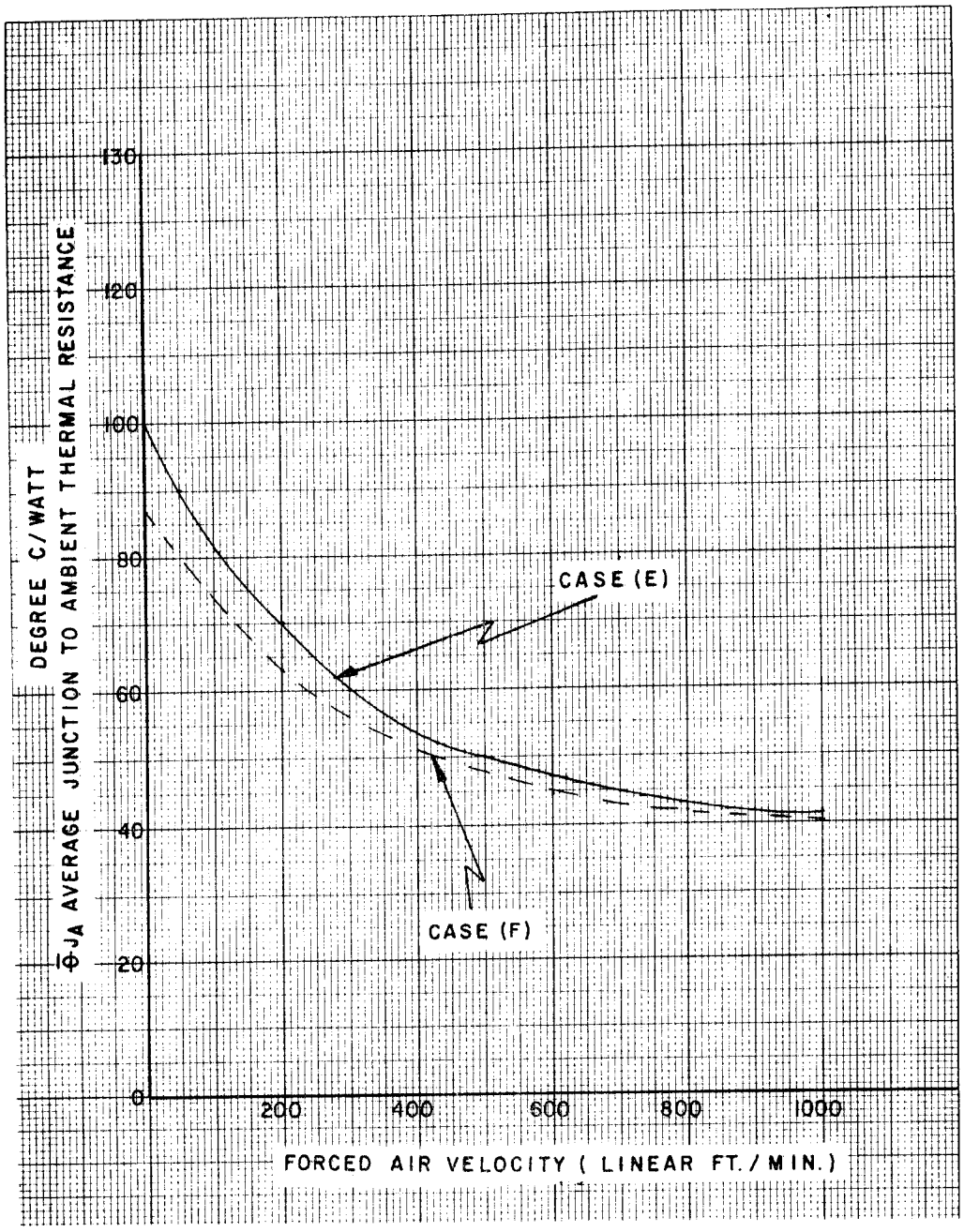


NOTE: ($\overline{\Theta}_{JA}$ -vs- forced air velocity) for case (E) and (F)

$T_J = T_C + \overline{\Theta}_{JA} \times P_D$ (max).

FIGURE 9. Air velocity versus average thermal resistance.

TABLE III. Group A inspection for device type 01.

| Symbol | MIL-STD-883 method | Cases | For terminal conditions see table IV | | | | | | | | | | | | | | | | Measured terminal | Limits | | | | | | Units |
|---|---|---|---|---|---|---|---|---|---|---|---|---|---|---|---|---|---|---|---|---|---|---|---|---|---|---|
| | | E | 1 | 2 | 3 | 4 | 5 | 6 | 7 | 8 | 9 | 10 | 11 | 12 | 13 | 14 | 15 | 16 | | Subgroup 1 $T_C$ = +25°C | | Subgroup 2 $T_C$ = +125°C | | Subgroup 3 $T_C$ = -55°C | | |
| | | F | 5 | 6 | 7 | 8 | 9 | 10 | 11 | 12 | 13 | 14 | 15 | 16 | 1 | 2 | 3 | 4 | | | | | | | | |
| | | 2 | 2 | 3 | 4 | 5 | 7 | 8 | 9 | 10 | 12 | 13 | 14 | 15 | 17 | 18 | 19 | 20 | | | | | | | | |
| | | Test no. | 2Y | 1Y | 2$\overline{Y}$ | 1$\overline{Y}$ | 1A | B | 2A | $V_{EE}$ | $V_{CC}$ | 3A | 4A | 3Y | 4$\overline{Y}$ | 4Y | 3Y | GND | | Min | Max | Min | Max | Min | Max | |
| $V_{OH}$ | 3006 | 1 | $LD_1$ | $LD_1$ | $LD_1$ | $LD_1$ | $V_{IH}$ | $V_{IH}$ | $V_{IH}$ | $V_{EE}$ | $V_{CC}$ | $V_{IH}$ | $V_{IH}$ | $LD_1$ | $LD_1$ | $LD_1$ | $LD_1$ | GND | 1Y | -.93 | -.780 | -.825 | -.63 | -1.08 | -.880 | V |
| | " | 2 | " | " | " | " | | " | | " | " | " | " | " | " | " | " | " | 2Y | " | " | " | " | " | " | " |
| | " | 3 | " | " | " | " | | " | | " | " | " | " | " | " | " | " | " | 3Y | " | " | " | " | " | " | " |
| | " | 4 | " | " | " | " | | " | | " | " | " | " | " | " | " | " | " | 4Y | " | " | " | " | " | " | " |
| | " | 5 | " | " | " | " | | $V_{IL}$ | | " | " | " | " | " | " | " | " | " | 1$\overline{Y}$ | " | " | " | " | " | " | " |
| | " | 6 | " | " | " | " | | " | | " | " | " | " | " | " | " | " | " | 2$\overline{Y}$ | " | " | " | " | " | " | " |
| | " | 7 | " | " | " | " | | " | | " | " | " | " | " | " | " | " | " | 3$\overline{Y}$ | " | " | " | " | " | " | " |
| | " | 8 | " | " | " | " | | " | | " | " | " | " | " | " | " | " | " | 4$\overline{Y}$ | " | " | " | " | " | " | " |
| $V_{OL}$ | 3007 | 9 | " | " | " | " | | | | " | " | " | " | " | " | " | " | " | 1Y | -1.85 | -1.62 | -1.82 | -1.545 | -1.92 | -1.655 | " |
| | " | 10 | " | " | " | " | | | | " | " | " | " | " | " | " | " | " | 2Y | " | " | " | " | " | " | " |
| | " | 11 | " | " | " | " | | | | " | " | " | " | " | " | " | " | " | 3Y | " | " | " | " | " | " | " |
| | " | 12 | " | " | " | " | | | | " | " | " | " | " | " | " | " | " | 4Y | " | " | " | " | " | " | " |
| | " | 13 | " | " | " | " | | | | " | " | " | " | " | " | " | " | " | 1$\overline{Y}$ | " | " | " | " | " | " | " |
| | " | 14 | " | " | " | " | | | | " | " | " | " | " | " | " | " | " | 2$\overline{Y}$ | " | " | " | " | " | " | " |
| | " | 15 | " | " | " | " | | | | " | " | " | " | " | " | " | " | " | 3$\overline{Y}$ | " | " | " | " | " | " | " |
| | " | 16 | " | " | " | " | | | | " | " | " | " | " | " | " | " | " | 4$\overline{Y}$ | " | " | " | " | " | " | " |
| $V_{OTH}$ | | 17 | " | " | " | " | $V_{ITH}$ | $V_{IH}$ | $V_{IH}$ | " | " | " | " | " | " | " | " | " | 1Y | -.95 | | -.845 | | -1.1 | | " |
| | | 18 | " | " | " | " | $V_{IH}$ | " | $V_{ITH}$ | " | " | " | " | " | " | " | " | " | 2Y | " | | " | | " | | " |
| | | 19 | " | " | " | " | " | " | $V_{IH}$ | " | " | $V_{ITH}$ | " | " | " | " | " | " | 3Y | " | | " | | " | | " |
| | | 20 | " | " | " | " | " | " | " | " | " | $V_{IH}$ | $V_{ITH}$ | " | " | " | " | " | 4Y | " | | " | | " | | " |
| | | 21 | " | " | " | " | " | $V_{ITH}$ | " | " | " | | | " | " | " | " | " | 1Y | " | | " | | " | | " |
| | | 22 | " | " | " | " | " | " | " | " | " | | | " | " | " | " | " | 2Y | " | | " | | " | | " |
| | | 23 | " | " | " | " | " | " | " | " | " | | | " | " | " | " | " | 3Y | " | | " | | " | | " |
| | | 24 | " | " | " | " | " | " | " | " | " | | | " | " | " | " | " | 4Y | " | | " | | " | | " |

TABLE III. Group A inspection for device type 01 - Continued.

| Symbol | MIL-STD-883 method | Cases | For terminal conditions see table IV | | | | | | | | | | | | | | | | Measured terminal | Limits | | | | | | Units |
|---|---|---|---|---|---|---|---|---|---|---|---|---|---|---|---|---|---|---|---|---|---|---|---|---|---|---|
| | | E | 1 | 2 | 3 | 4 | 5 | 6 | 7 | 8 | 9 | 10 | 11 | 12 | 13 | 14 | 15 | 16 | | Subgroup 1 $T_C$ = +25°C | | Subgroup 2 $T_C$ = +125°C | | Subgroup 3 $T_C$ = -55°C | | |
| | | F | 5 | 6 | 7 | 8 | 9 | 10 | 11 | 12 | 13 | 14 | 15 | 16 | 1 | 2 | 3 | 4 | | | | | | | | |
| | | J | 2 | 3 | 4 | 5 | 7 | 8 | 9 | 10 | 12 | 13 | 14 | 15 | 17 | 18 | 19 | 20 | | | | | | | | |
| | | Test no. | 2Y | 1Y | 2$\overline{Y}$ | 1$\overline{Y}$ | 1A | B | 2A | $V_{EE}$ | $V_{CC}$ | 3A | 4A | 3$\overline{Y}$ | 4$\overline{Y}$ | 4Y | 3Y | GND | | Min | Max | Min | Max | Min | Max | |
| $V_{OTH}$ | | 25 | $LD_1$ | $LD_1$ | $LD_1$ | $LD_1$ | $V_{IH}$ | $V_{ITL}$ | $V_{IH}$ | $V_{EE}$ | $V_{CC}$ | | | $LD_1$ | $LD_1$ | $LD_1$ | $LD_1$ | GND | 1$\overline{Y}$ | -.95 | | -.845 | | -1.1 | | V |
| | | 26 | " | " | " | " | " | " | " | " | " | | | " | " | " | " | " | 2$\overline{Y}$ | " | | " | | " | | " |
| | | 27 | " | " | " | " | " | " | " | " | " | | | " | " | " | " | " | 3$\overline{Y}$ | " | | " | | " | | " |
| | | 28 | " | " | " | " | " | " | " | " | " | | | " | " | " | " | " | 4$\overline{Y}$ | " | | " | | " | | " |
| | | 29 | " | " | " | " | $V_{ITL}$ | $V_{IH}$ | " | " | " | | | " | " | " | " | " | 1$\overline{Y}$ | " | | " | | " | | " |
| | | 30 | " | " | " | " | $V_{IH}$ | " | $V_{ITL}$ | " | " | | | " | " | " | " | " | 2$\overline{Y}$ | " | | " | | " | | " |
| | | 31 | " | " | " | " | " | " | $V_{IH}$ | " | " | $V_{ITL}$ | | " | " | " | " | " | 3$\overline{Y}$ | " | | " | | " | | " |
| | | 32 | " | " | " | " | " | " | " | " | " | $V_{IH}$ | $V_{ITL}$ | " | " | " | " | " | 4$\overline{Y}$ | " | | " | | " | | " |
| $V_{OTL}$ | | 33 | " | " | " | " | $V_{ITL}$ | " | " | " | " | " | $V_{IH}$ | " | " | " | " | " | 1Y | | -1.6 | | -1.525 | | -1.635 | " |
| | | 34 | " | " | " | " | $V_{IH}$ | " | $V_{ITL}$ | " | " | " | " | " | " | " | " | " | 2Y | | " | | " | | " | " |
| | | 35 | " | " | " | " | " | " | $V_{IH}$ | " | " | $V_{ITL}$ | " | " | " | " | " | " | 3Y | | " | | " | | " | " |
| | | 36 | " | " | " | " | " | " | " | " | " | $V_{IH}$ | $V_{ITL}$ | " | " | " | " | " | 4Y | | " | | " | | " | " |
| | | 37 | " | " | " | " | " | $V_{ITL}$ | " | " | " | " | $V_{IH}$ | " | " | " | " | " | 1Y | | " | | " | | " | " |
| | | 38 | " | " | " | " | " | " | " | " | " | " | $V_{IH}$ | " | " | " | " | " | 2Y | | " | | " | | " | " |
| | | 39 | " | " | " | " | " | " | " | " | " | " | " | " | " | " | " | " | 3Y | | " | | " | | " | " |
| | | 40 | " | " | " | " | " | " | " | " | " | " | " | " | " | " | " | " | 4Y | | " | | " | | " | " |
| | | 41 | " | " | " | " | " | " | " | " | " | " | " | " | " | " | " | " | 1$\overline{Y}$ | | " | | " | | " | " |
| | | 42 | " | " | " | " | " | " | " | " | " | " | " | " | " | " | " | " | 2$\overline{Y}$ | | " | | " | | " | " |
| | | 43 | " | " | " | " | " | " | " | " | " | " | " | " | " | " | " | " | 3$\overline{Y}$ | | " | | " | | " | " |
| | | 44 | " | " | " | " | " | " | " | " | " | " | " | " | " | " | " | " | 4$\overline{Y}$ | | " | | " | | " | " |
| | | 45 | " | " | " | " | $V_{ITH}$ | $V_{IH}$ | " | " | " | " | " | " | " | " | " | " | 1$\overline{Y}$ | | " | | " | | " | " |
| | | 46 | " | " | " | " | $V_{IH}$ | " | $V_{ITH}$ | " | " | " | " | " | " | " | " | " | 2$\overline{Y}$ | | " | | " | | " | " |
| | | 47 | " | " | " | " | " | " | " | " | " | $V_{ITH}$ | " | " | " | " | " | " | 3$\overline{Y}$ | | " | | " | | " | " |
| | | 48 | " | " | " | " | " | " | " | " | " | $V_{IH}$ | $V_{ITH}$ | " | " | " | " | " | 4$\overline{Y}$ | | " | | " | | " | " |

TABLE III. Group A inspection for device type 01 - Continued.

| Symbol | MIL-STD-883 method | Cases | For terminal conditions see table IV | | | | | | | | | | | | | | | | Measured terminal | Limits | | | | | | Units |
|---|---|---|---|---|---|---|---|---|---|---|---|---|---|---|---|---|---|---|---|---|---|---|---|---|---|---|
| | | E | 1 | 2 | 3 | 4 | 5 | 6 | 7 | 8 | 9 | 10 | 11 | 12 | 13 | 14 | 15 | 16 | | Subgroup 1 $T_C$ = +25°C | | Subgroup 2 $T_C$ = +125°C | | Subgroup 3 $T_C$ = -55°C | | |
| | | F | 5 | 6 | 7 | 8 | 9 | 10 | 11 | 12 | 13 | 14 | 15 | 16 | 1 | 2 | 3 | 4 | | | | | | | | |
| | | 2 | 2 | 3 | 4 | 5 | 7 | 8 | 9 | 10 | 12 | 13 | 14 | 15 | 17 | 18 | 19 | 20 | | | | | | | | |
| | | Test no. | 2Y | 1Y | 2$\overline{Y}$ | 1$\overline{Y}$ | 1A | B | 2A | $V_{EE}$ | $V_{CC}$ | 3A | 4A | 3$\overline{Y}$ | 4$\overline{Y}$ | 4Y | 3Y | GND | | Min | Max | Min | Max | Min | Max | |
| $V_{IC}$ | | 49 | | | | | -10 mA | | | $V_{EE}$ | $V_{CC}$ | | | | | | | GND | 1A | -1.5 | | | | | | V |
| | | 50 | | | | | | | -10 mA | " | " | | | | | | | " | 2A | " | | | | | | " |
| | | 51 | | | | | | | | " | " | -10 mA | | | | | | " | 3A | " | | | | | | " |
| | | 52 | | | | | | | | " | " | | -10 mA | | | | | " | 4A | " | | | | | | " |
| | | 53 | | | | | | -20 mA | | " | " | | | | | | | " | B | " | | | | | | " |
| $I_{IH1}$ | 3010 | 54 | | | | | $V_{IH}$ | GND | | " | " | | | | | | | " | 1A | | 50 | | 85 | | 85 | μA |
| | " | 55 | | | | | | " | $V_{IH}$ | " | " | | | | | | | " | 2A | | " | | " | | " | " |
| | " | 56 | | | | | | " | | " | " | $V_{IH}$ | | | | | | " | 3A | | " | | " | | " | " |
| | " | 57 | | | | | | " | | " | " | | $V_{IH}$ | | | | | " | 4A | | " | | " | | " | " |
| $I_{IH2}$ | " | 58 | | | | | GND | $V_{IH}$ | GND | " | " | GND | GND | | | | | " | B | | 200 | | 340 | | 340 | " |
| $I_{IL1}$ | 3009 | 59 | | | | | $V_{IL}$ | " | | " | " | | | | | | | " | 1A | - 3.2 | | -5.5 | | -3.2 | | mA |
| | " | 60 | | | | | | " | $V_{IL}$ | " | " | | | | | | | " | 2A | " | | " | | " | | " |
| | " | 61 | | | | | | " | | " | " | $V_{IL}$ | | | | | | " | 3A | " | | " | | " | | " |
| | " | 62 | | | | | | " | | " | " | | $V_{IL}$ | | | | | " | 4A | " | | " | | " | | " |
| $I_{IL2}$ | " | 63 | | | | | | $V_{IL}$ | | " | " | | | | | | | " | B | 12.8 | | -22.0 | | 12.8 | | " |
| $BV_{IN}$ | | 64 | | | | | 1 mA | " | | " | " | | | | | | | " | 1A | 5.5 | | 5.5 | | 5.5 | | V |
| | | 65 | | | | | | " | 1 mA | " | " | | | | | | | " | 2A | " | | " | | " | | " |
| | | 66 | | | | | | " | | " | " | 1 mA | | | | | | " | 3A | " | | " | | " | | " |
| | | 67 | | | | | | " | | " | " | | 1 mA | | | | | " | 4A | " | | " | | " | | " |
| | | 68 | | | | | $V_{IL}$ | 1 mA | $V_{IL}$ | " | " | $V_{IL}$ | $V_{IL}$ | | | | | " | B | " | | " | | " | | " |
| $I_{CCL}$ | 3005 | 69 | | | | | GND | GND | GND | " | " | GND | GND | | | | | " | $V_{CC}$ | | 25 | | 28 | | 28 | mA |
| $I_{CCH}$ | " | 70 | | | | | 5.0 V | 5.0 V | 5.0 V | " | " | 5.0 V | 5.0 V | | | | | " | $V_{CC}$ | | 16 | | 18 | | 18 | " |
| $I_{EE}$ | " | 71 | | | | | | | | " | " | | | | | | | " | $V_{EE}$ | -66 | | -73 | | -73 | | " |

TABLE III. Group A inspection for device type 01 - Continued.

| Symbol | MIL-STD-883 method | Cases E / F / 2 | 1 / 5 / 2 | 2 / 6 / 3 | 3 / 7 / 4 | 4 / 8 / 5 | 5 / 9 / 7 | 6 / 10 / 8 | 7 / 11 / 9 | 8 / 12 / 10 | 9 / 13 / 12 | 10 / 14 / 13 | 11 / 15 / 14 | 12 / 16 / 15 | 13 / 1 / 17 | 14 / 2 / 18 | 15 / 3 / 19 | 16 / 4 / 20 | Measured terminal | Limits: Subgroup 9 $T_C$ = +25°C | | Subgroup 10 $T_C$ = +125°C | | Subgroup 11 $T_C$ = -55°C | | Units |
|---|---|---|---|---|---|---|---|---|---|---|---|---|---|---|---|---|---|---|---|---|---|---|---|---|---|---|
| | | Test no. | 2Y | 1Y | 2$\overline{Y}$ | 1$\overline{Y}$ | 1A | B | 2A | $V_{EE}$ | $V_{CC}$ | 3A | 4A | 3$\overline{Y}$ | 4$\overline{Y}$ | 4Y | 3Y | GND | | Min | Max | Min | Max | Min | Max | |
| $t_{PLH}$ | 3003 Fig. 4 | 72 | $LD_2$ | OUT | $LD_2$ | $LD_2$ | IN | 6.0 V | | $V_{EEL}$ | $V_{CCH}$ | | | $LD_2$ | $LD_2$ | $LD_2$ | $LD_2$ | $V_{GG}$ | 1Y | 1.0 | 6.0 | 1.0 | 8.0 | 1.0 | 8.0 | ns |
| | " | 73 | $LD_2$ | $LD_2$ | " | OUT | IN | " | | " | " | | | " | " | " | " | " | 1$\overline{Y}$ | " | " | " | " | " | " | " |
| | " | 74 | OUT | " | " | $LD_2$ | | " | IN | " | " | | | " | " | " | " | " | 2Y | " | " | " | " | " | " | " |
| | " | 75 | $LD_2$ | " | OUT | " | | " | IN | " | " | | | " | " | " | " | " | 2$\overline{Y}$ | " | " | " | " | " | " | " |
| | " | 76 | " | " | $LD_2$ | " | | " | | " | " | IN | | " | " | " | OUT | " | 3Y | " | " | " | " | " | " | " |
| | " | 77 | " | " | " | " | | " | | " | " | IN | | OUT | " | " | $LD_2$ | " | 3$\overline{Y}$ | " | " | " | " | " | " | " |
| | " | 78 | " | " | " | " | | " | | " | " | | IN | $LD_2$ | " | OUT | " | " | 4Y | " | " | " | " | " | " | " |
| | " | 79 | " | " | " | " | | " | | " | " | | IN | " | OUT | $LD_2$ | " | " | 4$\overline{Y}$ | " | " | " | " | " | " | " |
| $t_{PHL}$ | " | 80 | " | OUT | " | " | IN | " | | " | " | | | " | $LD_2$ | " | " | " | 1Y | " | " | " | " | " | " | " |
| | " | 81 | " | $LD_2$ | " | OUT | IN | " | | " | " | | | " | " | " | " | " | 1$\overline{Y}$ | " | " | " | " | " | " | " |
| | " | 82 | OUT | " | " | $LD_2$ | | " | IN | " | " | | | " | " | " | " | " | 2Y | " | " | " | " | " | " | " |
| | " | 83 | $LD_2$ | " | OUT | " | | " | IN | " | " | | | " | " | " | " | " | 2$\overline{Y}$ | " | " | " | " | " | " | " |
| | " | 84 | " | " | $LD_2$ | " | | " | | " | " | IN | | " | " | " | OUT | " | 3Y | " | " | " | " | " | " | " |
| | " | 85 | " | " | " | " | | " | | " | " | IN | | OUT | " | " | $LD_2$ | " | 3$\overline{Y}$ | " | " | " | " | " | " | " |
| | " | 86 | " | " | " | " | | " | | " | " | | IN | $LD_2$ | " | OUT | " | " | 4Y | " | " | " | " | " | " | " |
| | " | 87 | " | " | " | " | | " | | " | " | | IN | " | OUT | $LD_2$ | " | " | 4$\overline{Y}$ | " | " | " | " | " | " | " |
| $t_{TLH}$ | 3004 Fig. 4 | 88 | " | OUT | " | " | IN | " | | " | " | | | " | " | " | " | " | 1Y | 1.1 | 3.9 | " | 5.0 | " | 5.0 | " |
| | " | 89 | " | $LD_2$ | " | OUT | IN | " | | " | " | | | " | " | " | " | " | 1$\overline{Y}$ | " | " | " | " | " | " | " |
| | " | 90 | OUT | " | " | $LD_2$ | | " | IN | " | " | | | " | " | " | " | " | 2Y | " | " | " | " | " | " | " |
| | " | 91 | $LD_2$ | " | OUT | " | | " | IN | " | " | | | " | " | " | " | " | 2$\overline{Y}$ | " | " | " | " | " | " | " |
| | " | 92 | " | " | $LD_2$ | " | | " | | " | " | IN | | " | " | " | OUT | " | 3Y | " | " | " | " | " | " | " |
| | " | 93 | " | " | " | " | | " | | " | " | IN | | OUT | " | " | $LD_2$ | " | 3$\overline{Y}$ | " | " | " | " | " | " | " |
| | " | 94 | " | " | " | " | | " | | " | " | | IN | $LD_2$ | " | OUT | " | " | 4Y | " | " | " | " | " | " | " |
| | " | 95 | " | " | " | " | | " | | " | " | | IN | $LD_2$ | " | $LD_2$ | " | " | 4$\overline{Y}$ | " | " | " | " | " | " | " |

TABLE III. Group A inspection for device type 01 - Continued.

| Symbol | MIL-STD-883 method | Cases E / F / Z | 1 / 5 / 2 | 2 / 6 / 3 | 3 / 7 / 4 | 4 / 8 / 5 | 5 / 9 / 7 | 6 / 10 / 8 | 7 / 11 / 9 | 8 / 12 / 10 | 9 / 13 / 12 | 10 / 14 / 13 | 11 / 15 / 14 | 12 / 16 / 15 | 13 / 1 / 17 | 14 / 2 / 18 | 15 / 3 / 19 | 16 / 4 / 20 | Measured terminal | Limits: Subgroup 9 $T_C$ = +25°C | | Subgroup 10 $T_C$ = +125°C | | Subgroup 11 $T_C$ = -55°C | | Units |
|---|---|---|---|---|---|---|---|---|---|---|---|---|---|---|---|---|---|---|---|---|---|---|---|---|---|---|
| | | | For terminal conditions see table IV | | | | | | | | | | | | | | | | | | | | | | | |
| | | Test no. | 2Y | 1Y | 2$\overline{Y}$ | 1$\overline{Y}$ | 1A | B | 2A | $V_{EE}$ | $V_{CC}$ | 3A | 4A | 3$\overline{Y}$ | 4$\overline{Y}$ | 4Y | 3Y | GND | | Min | Max | Min | Max | Min | Max | |
| $t_{THL}$ | 3004 Fig. 4 | 96 | $LD_2$ | OUT | $LD_2$ | $LD_2$ | IN | 6.0 V | | $V_{EEL}$ | $V_{CCH}$ | | | $LD_2$ | $LD_2$ | $LD_2$ | $LD_2$ | $V_{GG}$ | 1Y | 1.1 | 3.9 | 1.0 | 5.0 | 1.0 | 5.0 | ns |
| | " | 97 | $LD_2$ | $LD_2$ | " | OUT | IN | " | | " | " | | | " | " | " | " | " | 1$\overline{Y}$ | " | " | " | " | " | " | " |
| | " | 98 | OUT | " | " | $LD_2$ | | " | IN | " | " | | | " | " | " | " | " | 2Y | " | " | " | " | " | " | " |
| | " | 99 | $LD_2$ | " | OUT | " | | " | IN | " | " | | | " | " | " | " | " | 2$\overline{Y}$ | " | " | " | " | " | " | " |
| | " | 100 | " | " | $LD_2$ | " | | " | | " | " | IN | | " | " | " | OUT | " | 3Y | " | " | " | " | " | " | " |
| | " | 101 | " | " | " | " | | " | | " | " | IN | | OUT | " | " | $LD_2$ | " | 3$\overline{Y}$ | " | " | " | " | " | " | " |
| | " | 102 | " | " | " | " | | " | | " | " | | IN | $LD_2$ | " | OUT | " | " | 4Y | " | " | " | " | " | " | " |
| | " | 103 | " | " | " | " | | " | | " | " | | IN | $LD_2$ | OUT | $LD_2$ | " | " | 4$\overline{Y}$ | " | " | " | " | " | " | " |

TABLE III. Group A inspection for device type 02.

| Symbol | MIL-STD-883 method | Cases E | 1 | 2 | 3 | 4 | 5 | 6 | 7 | 8 | 9 | 10 | 11 | 12 | 13 | 14 | 15 | 16 | Measured terminal | Limits: Subgroup 1 $T_C$ = +25°C | | Subgroup 2 $T_C$ = +125°C | | Subgroup 3 $T_C$ = -55°C | | Units |
|---|---|---|---|---|---|---|---|---|---|---|---|---|---|---|---|---|---|---|---|---|---|---|---|---|---|---|
| | | F | 5 | 6 | 7 | 8 | 9 | 10 | 11 | 12 | 13 | 14 | 15 | 16 | 1 | 2 | 3 | 4 | | | | | | | | |
| | | 2 | 2 | 3 | 4 | 5 | 7 | 8 | 9 | 10 | 12 | 13 | 14 | 15 | 17 | 18 | 19 | 20 | | | | | | | | |
| | | Test no. | $V_{BB}$ | 1A | 1B | 1Y | 2Y | 2A | 2B | $V_{EE}$ | $V_{CC}$ | 3A | 3B | 3Y | 4Y | 4A | 4B | GND | | Min | Max | Min | Max | Min | Max | |
| $V_{OH}$ | 3006 | 1 | | $V_{IL}$ | $V_{IH}$ | $I_{OH}$ | | $V_{IL}$ | $V_{IH}$ | $V_{EE}$ | $V_{CC}$ | $V_{IL}$ | $V_{IH}$ | | | $V_{IL}$ | $V_{IH}$ | GND | 1Y | 2.5 | | 2.5 | | 2.5 | | V |
| | " | 2 | | " | " | | $I_{OH}$ | " | " | " | " | | | | | " | " | " | 2Y | " | | " | | " | | " |
| | " | 3 | | " | " | | | " | " | " | " | | | $I_{OH}$ | | " | " | " | 3Y | " | | " | | " | | " |
| | " | 4 | | " | " | | | " | " | " | " | | | | $I_{OH}$ | " | " | " | 4Y | " | | " | | " | | " |
| | " | 5 | | $V_{ILL}$ | $V_{ILL}$ | $I_{OH}$ | | $V_{ILL}$ | $V_{IL}$ | " | " | $V_{ILL}$ | $V_{IL}$ | | | $V_{ILL}$ | $V_{IL}$ | " | 1Y | " | | " | | " | | " |
| | " | 6 | | " | " | | $I_{OH}$ | " | " | " | " | | | | | " | " | " | 2Y | " | | " | | " | | " |
| | " | 7 | | " | " | | | " | " | " | " | | | $I_{OH}$ | | " | " | " | 3Y | " | | " | | " | | " |
| | " | 8 | | " | " | | | " | " | " | " | | | | $I_{OH}$ | " | " | " | 4Y | " | | " | | " | | " |
| | " | 9 | | $V_{ILH}$ | $V_{ILH}$ | $I_{OH}$ | | $V_{ILH}$ | $V_{IHH}$ | " | " | $V_{ILH}$ | $V_{IHH}$ | | | $V_{ILH}$ | $V_{IHH}$ | " | 1Y | " | | " | | " | | " |
| | " | 10 | | " | " | | $I_{OH}$ | " | " | " | " | | | | | " | " | " | 2Y | " | | " | | " | | " |
| | " | 11 | | " | " | | | " | " | " | " | | | $I_{OH}$ | | " | " | " | 3Y | " | | " | | " | | " |
| | " | 12 | | " | " | | | " | " | " | " | | | | $I_{OH}$ | " | " | " | 4Y | " | | " | | " | | " |
| | " | 13 | | $V_{ILL}$ | $V_{IHL}$ | $I_{OH}$ | | $V_{ILL}$ | $V_{IHL}$ | " | " | $V_{ILL}$ | $V_{IHL}$ | | | $V_{ILL}$ | $V_{IHL}$ | " | 1Y | " | | " | | " | | " |
| | " | 14 | | " | " | | $I_{OH}$ | " | " | " | " | | | | | " | " | " | 2Y | " | | " | | " | | " |
| | " | 15 | | " | " | | | " | " | " | " | | | $I_{OH}$ | | " | " | " | 3Y | " | | " | | " | | " |
| | " | 16 | | " | " | | | " | " | " | " | | | | $I_{OH}$ | " | " | " | 4Y | " | | | | " | | " |
| $V_{OL}$ | 3007 | 17 | | $V_{IH}$ | $V_{IL}$ | $I_{OL}$ | | $V_{IH}$ | $V_{IL}$ | " | " | $V_{IH}$ | $V_{IL}$ | | | $V_{IH}$ | $V_{IL}$ | " | 1Y | | 0.5 | | 0.5 | | 0.5 | " |
| | " | 18 | | " | " | | $I_{OL}$ | " | " | " | " | " | " | | | " | " | " | 2Y | | " | | " | | " | " |
| | " | 19 | | " | " | | | " | " | " | " | " | " | $I_{OL}$ | | " | " | " | 3Y | | " | | " | | " | " |
| | " | 20 | | " | " | | | " | " | " | " | " | " | | $I_{OL}$ | " | " | " | 4Y | | " | | " | | " | " |
| | " | 21 | | $V_{IHH}$ | $V_{IH}$ | $I_{OL}$ | | $V_{IHH}$ | $V_{IH}$ | " | " | $V_{IHH}$ | $V_{IH}$ | | | $V_{IHH}$ | $V_{IH}$ | " | 1Y | | " | | " | | " | " |
| | " | 22 | | " | " | | $I_{OL}$ | " | " | " | " | " | " | | | " | " | " | 2Y | | " | | " | | " | " |
| | " | 23 | | " | " | | | " | " | " | " | " | " | $I_{OL}$ | | " | " | " | 3Y | | " | | " | | " | " |
| | " | 24 | | " | " | | | " | " | " | " | " | " | | $I_{OL}$ | " | " | " | 4Y | | " | | " | | " | " |

For terminal conditions see table IV

TABLE III. Group A inspection for device type 02 - Continued

| Symbol | MIL-STD-883 method | Cases E | 1 | 2 | 3 | 4 | 5 | 6 | 7 | 8 | 9 | 10 | 11 | 12 | 13 | 14 | 15 | 16 | Measured terminal | Limits: Subgroup 1 $T_C$ = +25°C Min | Subgroup 1 Max | Subgroup 2 $T_C$ = +125°C Min | Subgroup 2 Max | Subgroup 3 $T_C$ = -55°C Min | Subgroup 3 Max | Units |
|---|---|---|---|---|---|---|---|---|---|---|---|---|---|---|---|---|---|---|---|---|---|---|---|---|---|---|
| | | F | 5 | 6 | 7 | 8 | 9 | 10 | 11 | 12 | 13 | 14 | 15 | 16 | 1 | 2 | 3 | 4 | | | | | | | | |
| | | 2 | 2 | 3 | 4 | 5 | 7 | 8 | 9 | 10 | 12 | 13 | 14 | 15 | 17 | 18 | 19 | 20 | | | | | | | | |
| | | Test no. | $V_{BB}$ | 1A | 1B | 1Y | 2Y | 2A | 2B | $V_{EE}$ | $V_{CC}$ | 3A | 3B | 3Y | 4Y | 4A | 4B | GND | | | | | | | | |
| $V_{OL}$ | 3007 | 25 | | $V_{IHH}$ | $V_{ILH}$ | $I_{OL}$ | | $V_{IHH}$ | $V_{ILH}$ | $V_{EE}$ | $V_{CC}$ | $V_{IHH}$ | $V_{ILH}$ | | | $V_{IHH}$ | $V_{ILH}$ | GND | 1Y | | 0.5 | | 0.5 | | 0.5 | V |
| | " | 26 | | " | " | | $I_{OL}$ | " | " | " | " | " | " | | | " | " | " | 2Y | | " | | " | | " | " |
| | " | 27 | | " | " | | | " | " | " | " | " | " | $I_{OL}$ | | " | " | " | 3Y | | " | | " | | " | " |
| | " | 28 | | " | " | | | " | " | " | " | " | " | | $I_{OL}$ | " | " | " | 4Y | | " | | " | | " | " |
| | " | 29 | | $V_{IHL}$ | $V_{ILL}$ | $I_{OL}$ | | $V_{IHL}$ | $V_{ILL}$ | " | " | $V_{IHL}$ | $V_{ILL}$ | | | $V_{IHL}$ | $V_{ILL}$ | " | 1Y | | " | | " | | " | " |
| | " | 30 | | " | " | | $I_{OL}$ | " | " | " | " | " | " | | | " | " | " | 2Y | | " | | " | | " | " |
| | " | 31 | | " | " | | | " | " | " | " | " | " | $I_{OL}$ | | " | " | " | 3Y | | " | | " | | " | " |
| | " | 32 | | " | " | | | " | " | " | " | " | " | | $I_{OL}$ | " | " | " | 4Y | | " | | " | | " | " |
| $V_{OTH}$ | | 33 | $V_{BB}$ | $V_{ITL}$ | $V_{BB}$ | $I_{OH}$ | | $V_{IL}$ | $V_{BB}$ | " | " | $V_{IL}$ | $V_{BB}$ | | | $V_{IL}$ | $V_{BB}$ | " | 1Y | 2.5 | | 2.5 | | 2.5 | | " |
| | | 34 | " | $V_{IL}$ | " | | $I_{OH}$ | $V_{ITL}$ | " | " | " | $V_{IL}$ | " | | | " | " | " | 2Y | " | | " | | " | | " |
| | | 35 | " | " | " | | | $V_{IL}$ | " | " | " | $V_{ITL}$ | " | $I_{OH}$ | | " | " | " | 3Y | " | | " | | " | | " |
| | | 36 | " | " | " | | | " | " | " | " | $V_{IL}$ | " | | $I_{OH}$ | $V_{ITL}$ | " | " | 4Y | " | | " | | " | | " |
| $V_{OTL}$ | | 37 | " | $V_{ITH}$ | " | $I_{OL}$ | | " | " | " | " | " | " | | | $V_{IL}$ | " | " | 1Y | | 0.5 | | 0.5 | | 0.5 | " |
| | | 38 | " | $V_{IL}$ | " | | $I_{OL}$ | $V_{ITH}$ | " | " | " | " | " | | | " | " | " | 2Y | | " | | " | | " | " |
| | | 39 | " | " | " | | | $V_{IL}$ | " | " | " | $V_{ITH}$ | " | $I_{OL}$ | | " | " | " | 3Y | | " | | " | | " | " |
| | | 40 | " | " | " | | | $V_{IL}$ | " | " | " | $V_{IL}$ | " | | $I_{OL}$ | $V_{ITH}$ | " | " | 4Y | | " | | " | | " | " |
| $V_{OLS}$ | | 41 | | | | $I_{OL}$ | | | | " | " | | | | | | | " | 1Y | | " | | " | | " | " |
| | | 42 | | | | | $I_{OL}$ | | | " | " | | | | | | | " | 2Y | | " | | " | | " | " |
| | | 43 | | | | | | | | " | " | | | $I_{OL}$ | | | | " | 3Y | | " | | " | | " | " |
| | | 44 | | | | | | | | " | " | | | | $I_{OL}$ | | | " | 4Y | | " | | " | | " | " |
| | | 45 | | | | $I_{OL}$ | | | | | " | | | | | | | " | 1Y | | " | | " | | " | " |
| | | 46 | | | | | $I_{OL}$ | | | | " | | | | | | | " | 2Y | | " | | " | | " | " |
| | | 47 | | | | | | | | | " | | | $I_{OL}$ | | | | " | 3Y | | " | | " | | " | " |
| | | 48 | | | | | | | | | " | | | | $I_{OL}$ | | | " | 4Y | | " | | " | | " | " |

TABLE III. Group A inspection for device type 02 - Continued.

| Symbol | MIL-STD-883 method | Cases E / F / 2 | 1 / 5 / 2 | 2 / 6 / 3 | 3 / 7 / 4 | 4 / 8 / 5 | 5 / 9 / 7 | 6 / 10 / 8 | 7 / 11 / 9 | 8 / 12 / 10 | 9 / 13 / 12 | 10 / 14 / 13 | 11 / 15 / 14 | 12 / 16 / 15 | 13 / 1 / 17 | 14 / 2 / 18 | 15 / 3 / 19 | 16 / 4 / 20 | Measured terminal | Limits: Subgroup 1 $T_C$ = +25°C Min | Subgroup 1 Max | Subgroup 2 $T_C$ = +125°C Min | Subgroup 2 Max | Subgroup 3 $T_C$ = -55°C Min | Subgroup 3 Max | Units |
|---|---|---|---|---|---|---|---|---|---|---|---|---|---|---|---|---|---|---|---|---|---|---|---|---|---|---|
| | | | For terminal conditions see table IV | | | | | | | | | | | | | | | | | | | | | | | |
| | | Test no. | $V_{BB}$ | 1A | 1B | 1Y | 2Y | 2A | 2B | $V_{EE}$ | $V_{CC}$ | 3A | 3B | 3Y | 4Y | 4A | 4B | GND | | | | | | | | |
| $V_{BB}$ | | 49 | $V_{BB}$ | | $V_{BB}$ | | | | $V_{BB}$ | $V_{EE}$ | $V_{CC}$ | | $V_{BB}$ | | | | $V_{BB}$ | GND | $V_{BB}$ | -1.35 | -1.23 | -1.24 | -1.12 | -1.44 | -1.32 | V |
| $I_{IH1}$ | 3010 | 50 | " | $V_{IH}$ | $V_{BB}$ | | | | " | " | " | | " | | | | " | " | 1A | | 115 | | 196 | | 196 | μA |
| | " | 51 | " | | | | | $V_{IH}$ | " | " | " | | " | | | | " | " | 2A | | " | | " | | " | " |
| | " | 52 | " | | | | | | " | " | " | $V_{IH}$ | " | | | | " | " | 3A | | " | | " | | " | " |
| | " | 53 | " | | | | | | " | " | " | | " | | | $V_{IH}$ | " | " | 4A | | " | | " | | " | " |
| | " | 54 | " | $V_{BB}$ | $V_{IH}$ | | | $V_{BB}$ | " | " | " | $V_{BB}$ | " | | | $V_{BB}$ | | " | 1B | | " | | " | | " | " |
| | " | 55 | " | " | | | | " | $V_{IH}$ | " | " | " | | | | " | | " | 2B | | " | | " | | " | " |
| | " | 56 | " | " | | | | " | | " | " | " | $V_{IH}$ | | | " | | " | 3B | | " | | " | | " | " |
| | " | 57 | " | " | | | | " | | " | " | " | | | | " | $V_{IH}$ | " | 4B | | " | | " | | " | " |
| $I_{CBO}$ | | 58 | " | $V_{EE}$ | $V_{BB}$ | | | " | $V_{BB}$ | " | " | " | $V_{BB}$ | | | " | $V_{BB}$ | " | 1A | -1.0 | | -1.0 | | -1.5 | | " |
| | | 59 | " | | " | | | $V_{EE}$ | " | " | " | | " | | | | " | " | 2A | " | | " | | " | | " |
| | | 60 | " | | " | | | | " | " | " | $V_{EE}$ | " | | | | " | " | 3A | " | | " | | " | | " |
| | | 61 | " | | " | | | | " | " | " | | " | | | $V_{EE}$ | " | " | 4A | " | | " | | " | | " |
| | | 62 | " | $V_{BB}$ | $V_{EE}$ | | | $V_{BB}$ | " | " | " | $V_{BB}$ | " | | | $V_{BB}$ | | " | 1B | " | | " | | " | | " |
| | | 63 | " | " | | | | " | $V_{EE}$ | " | " | " | | | | | | " | 2B | " | | " | | " | | " |
| | | 64 | " | " | | | | " | | " | " | " | $V_{EE}$ | | | | | " | 3B | " | | " | | " | | " |
| | | 65 | " | " | | | | " | | " | " | " | | | | | $V_{EE}$ | " | 4B | " | | " | | " | | " |
| $I_{OS}$ | | 66 | " | $V_{IL}$ | $V_{BB}$ | GND | | $V_{IL}$ | $V_{BB}$ | " | " | $V_{IL}$ | $V_{BB}$ | | | $V_{IL}$ | $V_{BB}$ | " | 1Y | -40 | -100 | -35 | -100 | -40 | -100 | mA |
| | | 67 | " | " | " | | GND | " | " | " | " | " | " | | | " | " | " | 2Y | " | " | " | " | " | " | " |
| | | 68 | " | " | " | | | " | " | " | " | " | " | | | " | " | " | 3Y | " | " | " | " | " | " | " |
| | | 69 | " | " | " | | | " | " | " | " | " | " | | | " | " | " | 4Y | " | " | " | " | " | " | " |
| $I_{CCL}$ | 3005 | 70 | " | " | " | | | " | " | " | " | " | " | | | " | " | " | $V_{CC}$ | | 39 | | 39 | | 39 | " |
| $I_{CCH}$ | " | 71 | " | $V_{IH}$ | " | | | $V_{IH}$ | " | " | " | $V_{IH}$ | " | | | $V_{IH}$ | " | " | $V_{CC}$ | | 52 | | 52 | | 52 | " |
| $I_{EE}$ | " | 72 | " | | " | | | | " | " | " | | " | | | | " | " | $V_{EE}$ | -40 | | -44 | | -40 | | " |

TABLE III. Group A inspection for device type 02 - Continued.

| Symbol | MIL-STD-883 method | Cases E / F / 2 | 1 / 5 / 2 | 2 / 6 / 3 | 3 / 7 / 4 | 4 / 8 / 5 | 5 / 9 / 7 | 6 / 10 / 8 | 7 / 11 / 9 | 8 / 12 / 10 | 9 / 13 / 17 | 10 / 14 / 13 | 11 / 15 / 14 | 12 / 16 / 15 | 13 / 1 / 17 | 14 / 2 / 18 | 15 / 3 / 19 | 16 / 4 / 20 | Measured terminal | Limits: Subgroup 9 $T_C$ = +25°C Min | Subgroup 9 Max | Subgroup 10 $T_C$ = +125°C Min | Subgroup 10 Max | Subgroup 11 $T_C$ = -55°C Min | Subgroup 11 Max | Units |
|---|---|---|---|---|---|---|---|---|---|---|---|---|---|---|---|---|---|---|---|---|---|---|---|---|---|---|
| | | | For terminal conditions see table IV | | | | | | | | | | | | | | | | | | | | | | | |
| | | Test no. | $V_{BB}$ | 1A | 1B | 1Y | 2Y | 2A | 2B | $V_{EE}$ | $V_{CC}$ | 3A | 3B | 3Y | 4Y | 4A | 4B | GND | | | | | | | | |
| $t_{PLH}$ | 3003 Fig. 5 | 73 | $V_{BB}$ | IN | $V_{BB}$ | OUT | | $V_{ILS}$ | $V_{BB}$ | $V_{EE}$ | $V_{CC}$ | $V_{ILS}$ | $V_{BB}$ | | | $V_{ILS}$ | $V_{BB}$ | GND | 1Y | 1.0 | 6.0 | 1.0 | 7.0 | 1.0 | 6.5 | ns |
| | " | 74 | " | $V_{ILS}$ | " | | OUT | IN | " | " | " | $V_{ILS}$ | " | | | " | " | " | 2Y | " | " | " | " | " | " | " |
| | " | 75 | " | " | " | | | $V_{ILS}$ | " | " | " | IN | " | OUT | | " | " | " | 3Y | " | " | " | " | " | " | " |
| | " | 76 | " | " | " | | | " | " | " | " | $V_{ILS}$ | " | | OUT | IN | " | " | 4Y | " | " | " | " | " | " | " |
| $t_{PHL}$ | " | 77 | " | IN | " | OUT | | " | " | " | " | " | " | | | $V_{ILS}$ | " | " | 1Y | " | " | " | " | " | " | " |
| | " | 78 | " | $V_{ILS}$ | " | | OUT | IN | " | " | " | " | " | | | " | " | " | 2Y | " | " | " | " | " | " | " |
| | " | 79 | " | " | " | | | $V_{ILS}$ | " | " | " | IN | " | OUT | | " | " | " | 3Y | " | " | " | " | " | " | " |
| | " | 80 | " | " | " | | | | " | " | " | $V_{ILS}$ | " | | OUT | IN | " | " | 4Y | " | " | " | " | " | " | " |
| $t_{TLH}$ | 3004 Fig. 5 | 81 | " | IN | " | OUT | | | " | " | " | " | " | | | $V_{ILS}$ | " | " | 1Y | | 3.3 | | 5.3 | | 4.5 | " |
| | " | 82 | " | $V_{ILS}$ | " | | OUT | IN | " | " | " | " | " | | | " | " | " | 2Y | | " | | " | | " | " |
| | " | 83 | " | " | " | | | $V_{ILS}$ | " | " | " | IN | " | OUT | | " | " | " | 3Y | | " | | " | | " | " |
| | " | 84 | " | " | " | | | " | " | " | " | $V_{ILS}$ | " | | OUT | IN | " | " | 4Y | | " | | " | | " | " |
| $t_{THL}$ | " | 85 | " | IN | " | OUT | | " | " | " | " | " | " | | | $V_{ILS}$ | " | " | 1Y | | " | | " | | " | " |
| | " | 86 | " | $V_{ILS}$ | " | | OUT | IN | " | " | " | " | " | | | " | " | " | 2Y | | " | | " | | " | " |
| | " | 87 | " | " | " | | | $V_{ILS}$ | " | " | " | IN | " | OUT | | " | " | " | 3Y | | " | | " | | " | " |
| | " | 88 | " | " | " | | | $V_{ILS}$ | " | " | " | $V_{ILS}$ | " | | OUT | IN | " | " | 4Y | | " | | " | | " | " |

TABLE IV. Test Conditions for group A inspection for device type 01.

| Symbol | $V_{IH}$ (V) | $V_{IL}$ (V) | $V_{ITL}$ (V) | $V_{ITH}$ (V) | $V_{EE}$ (V) | $V_{EEL}$ (V) | $V_{CC}$ (V) | $LD_1$ $LD_1$ | $LD_2$ $LD_2$ | $V_{CCH}$ (V) | $V_{GG}$ (V) |
|---|---|---|---|---|---|---|---|---|---|---|---|
| $T_C$ = +25°C | +2.4 | +0.4 | +1.10 | +1.80 | -5.2 | -3.2 | +5.0 | 100Ω to -2V | 100Ω to GND | +7.0 | +2.0 |
| $T_C$ = +125°C | +2.4 | +0.4 | +0.80 | +1.80 | -5.2 | -3.2 | +5.0 | 100Ω to -2V | 100Ω to GND | +7.0 | +2.0 |
| $T_C$ = -55°C | +2.4 | +0.4 | +1.10 | +2.00 | -5.2 | -3.2 | +5.0 | 100Ω to -2V | 100Ω to GND | +7.0 | +2.0 |

TABLE IVA. Test conditions for group A inspection for device type 02.

| Symbol | $V_{IH}$ (V) | $V_{IL}$ (V) | $V_{ITL}$ (V) | $V_{ITH}$ (V) | $V_{EE}$ (V) | $V_{BB}$ | $V_{CC}$ (V) | $V_{CB}$ (V) | $V_{IHH}$ (V) | $V_{ILH}$ (V) | $V_{IHL}$ (V) | $V_{ILL}$ (V) | $V_{ILS}$ (V) | $I_{OH}$ (mA) | $I_{OL}$ (mA) |
|---|---|---|---|---|---|---|---|---|---|---|---|---|---|---|---|
| $T_C$ = +25°C | -0.780 | -1.850 | -1.475 | -1.105 | -5.2 | Tie to $V_{BB}$ | 5.0 | -5.2 | +0.220 | -0.850 | -1.780 | -2.850 | -1.690 | -2.0 | +12.0 |
| $T_C$ = +125°C | -0.630 | -1.820 | -1.400 | -1.000 | -5.2 | Tie to $V_{BB}$ | 5.0 | -5.2 | +0.370 | -0.820 | -1.630 | -2.820 | | -2.0 | +12.0 |
| $T_C$ = -55°C | -0.880 | -1.920 | -1.510 | -1.255 | -5.2 | Tie to $V_{BB}$ | 5.0 | -5.2 | +0.120 | -0.920 | -1.880 | -2.920 | | -2.0 | +12.0 |

4.4.4 Group D inspection. Group D inspection shall be in accordance with table IV of method 5005 of MIL-STD-883. End-point electrical parameters shall be as specified in table II.

4.5 Methods of inspection. Methods of inspection shall be specified as follows:

4.5.1 Voltage and current. All voltages given are referenced to the microcircuit ground terminal. Currents given are conventional current and positive when flowing into the referenced terminal.

5. PACKAGING

5.1 Packaging requirements. The requirements for packaging shall be in accordance with MIL-M-38510.

6. NOTES

6.1 Intended use. Microcircuits conforming to this specification are intended for original equipment design applications and logisitic support of existing equipment.

6.2 Ordering data. The acquisition document should specify the following:

a. Complete part number (see 1.2).

b. Requirements for delivery of one copy of the quality conformance inspection data pertinent to the device inspection lot to be supplied with each shipment by the device manufacturer, if applicable.

c. Requirements for certificate of compliance, if applicable.

d. Requirements for notification of change of product or process to the contracting activity in addition to notification to the qualifying activity, if applicable.

e. Requirements for failure analysis (including required test condition of method 5003 of MIL-STD-883), corrective action, and reporting of results, if applicable.

f. Requirements for product assurance options.

g. Requirements for special carriers, lead lengths, or lead forming, if applicable, these requirements shall not affect the part number. Unless otherwise specified, these requirements shall not apply to direct purchase by or direct shipment to the Government.

h. Requirements for "JAN" marking.

6.3 Abbreviations, symbols, and definitions. The abbreviations, symbols, and definitions used herein are defined in MIL-M-38510, MIL-STD-1331, and as follows:

| | |
|---|---|
| $BV_{IN}$ | Input breakdown voltage |
| GND | Ground zero voltage potential. |
| $V_{OTH}$ | High-level threshold output voltage. |
| $V_{OTL}$ | Low-level threshold output voltage. |
| $V_{ITH}$ | High-level threshold input voltage. |
| $V_{ITL}$ | Low-level threshold input voltage. |
| $V_{EEL}$ | Shifted power supply voltage for the purpose of ac testing. |
| $V_{OLS}$ | Input protection tests. |
| $I_{CBO}$ | Input leakage. |

6.4 Logistic support. Lead materials and finishes (see 3.3) are interchangeable. Unless otherwise specified, microcircuits acquired for Government logistic support will be acquired to device class B (see 1.2.2), and lead material and finish C (see 3.3). Longer lead lengths and lead forming shall not affect the part number.

6.5 Substitutability. The cross-reference information below is presented for the convenience of users. Microcircuits covered by this specification will functionally replace the listed generic-industry type. Generic-industry microcircuit types may not have equivalent operational performance characteristics across military temperature ranges or reliability factors equivalent to MIL-M-38510 device types and may have slight physical variations in relation to case size. The presence of this information shall not be deemed as permitting substitution of generic-industry types for MIL-M-38510 types or as a waiver of any of the provisions of MIL-M-38510.

| Military device type | Generic-industry type |
|---|---|
| 01 | 10524 |
| 02 | 10525 |

6.6 Test limit compensation examples.

a. A device which has a power dissipation of 100 mW in case F is to be tested under a zero air flow condition. On figure 7 $\Delta T_J$ between 500 linear ft/min and zero air flow is +4°C. In order to adjust the various parameter limits, use figure 8 which defines the limit adjustment coefficients for $\Delta T_J$. To adjust $V_{OH}$(max) at -55°C, use the $+\Delta T_J$ column of the -55°C portion of figure 8 and locate the coefficient corresponding to $V_{OH}$(max). This value is 1.25 mV/°C. Multiply at the $\Delta T_J$ by the coefficient and algebraically add it to the -55°C $V_{OH}$(max) limit from table III.

$$V_{OH}(\max)\ (\text{adjusted limit}) = (+4^\circ\text{C} \times 1.25\ \text{mV}/^\circ\text{C}) + (-880\ \text{mV})$$
$$= 5\ \text{mV} - 880\ \text{mV} = -875\ \text{mV}$$
$$\text{Use } -875\ \text{mV}$$

Follow the same procedure to adjust the remaining parameters at -55°C as well as all parameters at +25°C and +125°C.

b. A device with a power dissipation of 150 mW in case E is to be tested at an air flow of 200 linear ft/min and the 25°C testing is to be accomplished at a case temperature of +20°C. On figure 6 $\Delta T_J$ due to air flow is +3°C. The $\Delta T_J$ due to ambient temperature change is -5°C (25-20). Therefore the total $\Delta T_J$ = -5 +3 = -2°C. Using figure 8, find the +25°C, $-\Delta T_J$ column. To adjust $V_{OL}$ (max) locate the limit coefficient corresponding to $V_{OL}$ (max) for a negative $\Delta T_J$, this value is 0.44 mV°C. Multiply the $\Delta T_J$ by the coefficient and algebraically add it to the +25°C $V_{OL}$ (max) limit from table III.

$$V_{OL}\ (\max)\ (\text{adjusted limit}) = (-2^\circ\text{C}) \times (0.44\ \text{mV}/^\circ\text{C}) + (-1620\ \text{mV})$$
$$= -.88\ \text{mV} - 1620\ \text{mV} = -1620.88\ \text{mV}$$
$$\text{Use } -1621\ \text{mV}$$

Follow the same procedure to adjust the remaining parameters at +25°C.

6.7 Changes from previous issue. Asterisks are not used in this revision to identify changes with respect to the previous issue, due to the extensiveness of the changes.

Custodians:
Army - ER
Navy - EC
Air Force - 17

Review activities:
Army - AR, MI
Navy - OS, SH, TD
Air Force - 11, 19, 85, 99
DLA - ES

User activities:
Army - SM
Navy - AS, CG, MC

Agent:
DLA - ES

Preparing activity:
Air Force - 17

(Project 5962-0784-4)