MILITARY SPECIFICATION

MICROCIRCUITS, DIGITAL, HIGH SPEED, CMOS FLIP-FLOPS, MONOLITHIC SILICON, POSITIVE LOGIC

This specification is approved for use by all Departments and Agencies of the Department of Defense.

1. SCOPE

1.1 Scope. This specification covers the detail requirements for monolithic silicon, high speed, CMOS, flip-flops, bistable logic microcircuits. Two product assurance classes and a choice of case outlines and lead finish are provided and are reflected in the complete part number.

1.2 Part number. The part number shall be in accordance with MIL-M-38510, and as specified herein.

1.2.1 Device type. The device types shall be as follows:

Device type	Circuit
01	Dual JK flip-flop with clear
02	Dual D positive-edge triggered flip-flops with clear and preset
03	Dual JK negative-edge triggered flip-flops with clear
04	Dual JK positive-edge triggered flip-flops with clear and preset
05	Dual JK negative-edge triggered flip-flops with clear and preset
06	Quad D-type flip-flops with 3-state outputs and clear
07	Hex D-type flip-flops with clear
08	Quad D-type flip-flops with clear
52	Dual D-type positive-edge triggered flip-flops with clear and preset (TTL compatible inputs)

1.2.2 Device class. The device class shall be the product assurance level as defined in MIL-M-38510.

1.2.3 Case outlines. The case outlines shall be designated as follows:

Outline letter	Case outline (see MIL-M-38510, appendix C)
C	D-1 (14-lead, 1/4" x 3/4"), dual-in-line package
D	F-2 (14-lead, 1/4" x 3/8"), flat package
E	D-2 (16 lead, 1/4" x 7/8"), dual-in-line package
F	F-5 (16-lead, 1/4" x 3/8"), flat package
2	C-2 (20-terminal, .350" x .350") square chip carrier package

1.3 Absolute maximum ratings.

Supply voltage - - - - - - - - - - - - - -	-0.5 V dc to +7.0 V dc
DC input voltage - - - - - - - - - - - - - -	-0.5 V dc to V_{CC} +0.5 V dc
DC output voltage- - - - - - - - - - - - - -	-0.5 V dc to V_{CC} +0.5 V dc
Clamp diode current- - - - - - - - - - - - -	±20 mA
DC output current per pin- - - - - - - - - -	±25 mA (±35 mA for type 06)
DC V_{CC} or GND current per pin- - - - - - -	±50 mA (±70 mA for type 06)
Storage temperature range- - - - - - - - -	-65°C to +150°C

Beneficial comments (recommendations, additions, deletions) and any pertinent data which may be of use in improving this document should be addressed to: Rome Air Development Center (RBE-2), Griffiss AFB, NY 13441-5700, by using the self-addressed Standardization Document Improvement Proposal (DD Form 1426) appearing at the end of this document or by letter.

DISTRIBUTION STATEMENT A. Approved for public release; distribution is unlimited.

Maximum power dissipation:	
Devices 01-05, 07, 08, 52- - - - - - - -	300 mW
Device 06- - - - - - - - - - - - - - - -	420 mW
Lead temperature (soldering, 10 seconds) -	+300°C
Thermal resistance, junction-to-case (θ_{JC}):	
Cases C, D, E, F, and 2- - - - - - - - -	(See MIL-M-38510, appendix C)
Junction temperature (T_J)- - - - - - - - -	+175°C

1.4 Recommended operating conditions.

Device types 01 to 08:

Input low (V_{IL}) maximum voltage- - - -	0.3 V at V_{CC} = 2 V 0.9 V at V_{CC} = 4.5 V 1.2 V at V_{CC} = 6 V
Input high (V_{IH}) minimum voltage - - - -	1.5 V at V_{CC} = 2 V 3.15 V at V_{CC} = 4.5 V 4.2 V at V_{CC} = 6 V
Supply voltage (V_{CC}) - - - - - - - - - - -	2 V dc to 6 V dc
Input voltage- - - - - - - - - - - - - - -	0 V dc to V_{CC}
Operating temperature- - - - - - - - - - -	-55°C to +125°C
Input rise and fall times (t_r, t_f) maximum:	
V_{CC} = 2 V 1000 ns	
V_{CC} = 4.5 V 500 ns	
V_{CC} = 6 V 400 ns	
Width of clock pulse (t_p clock):	V_{CC} = 4.5 V
Devices 01, 03, 04, 06, 07 - - - - - - -	27 ns minimum
Devices 02, 05 - - - - - - - - - - - - -	30 ns minimum
Device 08- - - - - - - - - - - - - - - -	24 ns minimum
Width of clear pulse (t_p clear):	
Devices 01, 02, 03, 04, 05, 06 - - - -	30 ns minimum
Devices 07, 08 - - - - - - - - - - - - -	24 ns minimum
Width of preset pulse:	
Devices 02, 04, 05 - - - - - - - - - - -	30 ns minimum
Data setup time before clock (t_{setup}):	
Devices 01-08- - - - - - - - - - - - - -	30 ns minimum
Clear or preset setup time before clock (t_{rem}):	
Devices 01, 03, 04, 05, 07, 08 - - - -	30 ns minimum
Device 02- - - - - - - - - - - - - - - -	38 ns minimum
Device 06- - - - - - - - - - - - - - - -	27 ns minimum
t_{HOLD}	
Devices 01-08- - - - - - - - - - - - - -	8 ns minimum

Device type 52:

Input low (V_{IL}) maximum voltage- - - - -	0.8 V at V_{CC} = 4.5 V - 5.5 V
Input high (V_{IH}) minimum voltage - - - -	2.0 V at V_{CC} = 4.5 V - 5.5 V
Supply voltage (V_{CC}) - - - - - - - - - - -	4.5 V dc to 5.5 V dc
Output voltage - - - - - - - - - - - - - - -	0 V dc to V_{CC}
Operating ambient temperature (T_A) - - -	-55°C to +125°C
Width of clock pulse (t_p clock)- - - - -	30 ns minimum
Width of clear pulse (t_p clear)- - - - -	30 ns minimum
Width of preset pulse- - - - - - - - - - -	30 ns minimum
Data setup time before clock (t_{setup})	30 ns minimum
t_{rem} setup time before clock (t_{su} clear or t_{su} preset)- - - - - - -	38 ns minimum
t_{HOLD}- - - - - - - - - - - - - - - - - -	3 ns minimum
Input rise and fall times (t_r, t_f):	
V_{CC} = 4.5 V- - - - - - - - - - - - - - -	500 ns maximum

2. APPLICABLE DOCUMENTS

2.1 Government documents.

2.1.1 Specification and standard. The following specification and standard form a part of this specification to the extent specified herein. Unless otherwise specified, the issues of these documents shall be those listed in the issue of the Department of Defense Index of Specifications and Standards (DODISS) and supplement thereto, cited in the solicitaiton.

SPECIFICATION

MILITARY

MIL-M-38510 - Microcircuits, General Specification for.

STANDARD

MILITARY

MIL-STD-883 - Test Methods and Procedures for Microelectronics.

(Copies of the specification and standard required by contractors in connection with specific acquisition functions should be obtained from the contracting activity or as directed by the contracting activity.)

2.2 Order of precedence. In the event of a conflict between the text of this specification and the references cited herein (except for associated detail specifications, specification sheets or MS standards), the text of this specification shall take precedence. Nothing in this specification, however, shall supersede applicable laws and regulations unless a specific exemption has been obtained.

3. REQUIREMENTS

3.1 Detail specification. The individual item requirements shall be in accordance with MIL-M-38510, and as specified herein.

3.2 Design, construction, and physical dimensions. The design, construction, and physical dimensions shall be as specified in MIL-M-38510 and herein.

3.2.1 Logic diagrams and terminal connections. The logic diagrams and terminal connections shall be as specified on figure 1.

3.2.2 Truth tables. The truth tables shall be as specified on figure 2.

3.2.3 Schematic circuits. The schematic circuits shall be submitted to the preparing activity prior to inclusion of a manufacturer's device in this specification and shall be submitted to the qualifying activity as a prerequisite for qualification. All qualified manufacturers' schematics shall be maintained and available upon request.

3.2.4 Case outlines. The case outlines shall be as specified in 1.2.3.

3.3 Lead material and finish. The lead material and finish shall be in accordance with MIL-M-38510 and 6.4 herein.

3.4 Electrical performance characteristics. Unless otherwise specified, the electrical performance characteristics are as specified in table I, and apply over the full recommended ambient operating temperature range.

3.5 Electrical test requirements. The electrical test requirements for each device class shall be the subgroups specified in table II. The electrical tests for each subgroup are described in table III.

3.6 Marking. Marking shall be in accordance with MIL-M-38510. At the option of the manufacturer, marking of the country of origin may be omitted from the body of the microcircuit, but shall be retained on the initial container.

TABLE I. Electrical performance characteristics.

Test	Symbol	Conditions 1/ T_C = +125°C unless otherwise specified		Device type 2/	V_{CC}	Limits Min	Limits Max	Unit
High-level output voltage	V_{OH1} 3/	V_{IH} = 1.5 V; V_{IL} = 0.3 V I_{OH} = -20 µA		All	2.0 V	1.95		V
	V_{OH2} 3/	V_{IH} = 3.15 V; V_{IL} = 0.9 V I_{OH} = -20 µA		All	4.5 V	4.45		V
	V_{OH3}	V_{IH} = 4.2 V; V_{IL} = 1.2 V I_{OH} = -20 µA		All	6.0 V	5.95		V
	V_{OH4} 3/	V_{IH} = 3.15 V; V_{IL} = 0.9 V I_{OH} = -4.0 mA		All	4.5 V	3.7		V
	V_{OH5}	V_{IH} = 4.2 V V_{IL} = 1.2 V	I_{OH} = -5.2 mA	01,02 03,04, 05,07,08	6.0 V	5.2		V
			I_{OH} = -7.8 mA	06				
	V_{OH6}	V_{IH} = 2.0 V; V_{IL} = 0.8 V I_{OH} = -20 mA		52	4.5 V	4.40		V
	V_{OH7}	V_{IH} = 2.0 V; V_{IL} = 0.8 V I_{OH} = -4.0 mA		52	5.5 V	3.70		V
Low-level output voltage	V_{OL1} 3/	V_{IL} = 0.3 V; V_{IH} = 1.5 V I_{OH} = 20.0 µA		All	2.0 V		0.05	V
	V_{OL2} 3/	V_{IL} = 0.9 V; V_{IH} = 3.15 V I_{OH} = 20.0 µA		All	4.5 V		0.05	V
	V_{OL3}	V_{IL} = 1.2 V; V_{IH} = 4.2 V I_{OH} = 20.0 µA		All	6.0 V		0.05	V
	V_{OL4} 3/	V_{IL} = 0.9 V; V_{IH} = 3.15 V I_{OH} = 4.0 mA		All	4.5 V		0.4	V
	V_{OL5}	V_{IL} = 1.2 V V_{IH} = 4.2 V	I_{OH} = 5.2 mA	01,02 03,04, 05,07,08	6.0 V		0.4	V
			I_{OH} = 7.8 mA	06				
	V_{OL6}	V_{IL} = 0.8 V; V_{IH} = 2.0 V I_{OL} = 20 mA		52	4.5 V		0.05	V
	V_{OL7}	V_{IL} = 0.8 V; V_{IH} = 2.0 V I_{OL} = 4.0 mA		52	5.5 V		0.4	V

See footnotes at end of table.

TABLE I. Electrical performance characteristics - Continued.

Test	Symbol	Conditions 1/ T_C = +125°C unless otherwise specified	Device type 2/	V_{CC}	Limits Min	Limits Max	Unit
Positive input clamp voltage	V_{IC+}	V_{CC} - GND; I_{IN} - 1 mA T_C = +25°C	All	GND		1.5	V
Negative input clamp voltage	V_{IC-}	V_{CC} = Open; I_{IN} = -1 mA T_C = +25°C	All	OPEN		-1.5	V
Input current low	I_{IL}	V_{IN} = GND	01-08	6.0 V		-0.1	µA
			52	5.5 V			
Input current high	I_{IH}	V_{IN} = V_{CC}	01-08	6.0 V		0.1	µA
			52	5.5 V			
Short circuit output current	I_{OS1} 3/	V_O = GND V_I = GND	01-05, 07,08	2.0 V	-2	-50	mA
			06			-60	
	I_{OS2} 3/		01-05, 07,08,52	4.5 V	-15	-150	
			06			-165	
	I_{OS3} 3/		01-05, 07,08	6.0 V	-25	-180	
			06			-210	
	I_{OS4}		01-05, 07,08,52	4.0 V	-10	-120	
			06			-135	
	I_{OS5} 3/		52	5.5 V	-25	-180	
Additional supply current quiescent in accordance with input pin (one unit load	$I_{CC\Delta}$ 8/	V_{IL} = 0.8 V; V_{IH} = 2.4 V Test pin at V_{IN} = 2.4 V Other pins at 0.8 V or 5.5 V; I_O = 0 V	52	5.5 V		1.5	mA
Supply current quiescent	I_{CC}	V_I = 6.0 V	01-05, 52	6.0 V		15	µA
			06-08			20	
	I_{CCZ}	V_I = 6.0 V	06	6.0 V		10	µA
Three-state output leakage current low	I_{OZL}	V_{OUT} = GND OC = V_{IH} 4/	06	6.0 V		-2.0	µA
Three-state output leakage current high	I_{OZH}	V_{OUT} = V_{CC} OC = V_{IH} 4/	06	6.0 V		+2.0	µA

See footnotes at end of table.

TABLE I. Electrical performance characteristics - Continued.

Test	Symbol	Conditions 1/ T_C = +125°C unless otherwise specified	Device type 2/	V_{CC}	Limits Min	Limits Max	Unit
Input capacitance control	C_C	T_C = +25°C	All			15	pF
Input capacitance	C_I		All			10	
Three-state output capacitance	C_O		06	6.0 V		20	
Power dissipation capacitance	C_{PD} 2/ 3/		01			30	MHz
			02-05			35	
			06			29	
			07			38	
			08			65	
			52			30	
Maximum clock frequency	f_{MAX} 5/ 6/	C_L = 50 pF ±10%	01,03, 04,06, 07	4.5 V	23		
			02,05, 52		21		
			08		26		
Maximum propagation delay time low to high level CLK to Q	t_{PLH1}	C_L = 50 pF ±10% 6/ 7/	02,04, 05,52	4.5 V	5	41	ns
			01,03		5	40	
			06		6	47	
			07		5	42	
			08		4	41	
Maximum propagation delay time high to low level CLK to Q	t_{PHL1}		02,04, 05,52		5	41	
			01,03		5	40	
			06		6	47	
			07		5	42	
			08		4	41	
Maximum propagation delay time low to high level $\overline{CLR}$ or $\overline{PRE}$ to Q or $\overline{Q}$	t_{PLH2}		01,06		6	43	
			02		5	54	
			03		6	51	
			04		6	54	
			08		4	43	
			52		5	47	

See footnotes at end of table.

TABLE I. Electrical performance characteristics - Continued.

Test	Symbol	Conditions 1/ T_C = +125°C unless otherwise specified	Device type 2/	V_{CC}	Limits Min	Limits Max	Unit
Maximum propagation delay time high to low level $\overline{CLR}$ or $\overline{PRE}$ to Q or $\overline{Q}$	t_{PHL2}	C_L = 50 pF ±10% 6/ 7/	01,05		6	43	ns
			02		5	54	
			03		6	51	
			04		6	54	
			06		5	41	
			07		5	42	
			08		4	43	
			52		5	47	
Maximum enable time to high or low levels	t_{PZH} or t_{PZL}		06		5	35	
Maximum disable time to high or low levels	t_{PHZ} or t_{PLZ}		06		5	35	
Maximum transition time, low to high or high to low	t_{TLH} or t_{THL}		01-05, 07,08,52		3	20	
			06		2	16	

1/ Complete terminal conditions shall be as specified in table III.
2/ Power dissipation capacitance (C_{PD}) per flip-flop.
3/ Guaranteed but not tested.
4/ I_{OZL} set internal D flip-flops to high state.
I_{OZH} set internal D flip-flops to low state.
5/ See the formula for determining maximum frequencies shown in table IA.
6/ Tested at V_{CC} = 4.5 V at 125°C for sample testing and V_{CC} = 4.5 V and 25°C for screening. Guaranteed at other V_{CC} voltages and temperatures. See tables IA and IB (as appropriate) and the exception in 4.4.1d.
7/ For propagation and transition delay times at V_{CC} = 2.0 V, increase limit by a factor of 5. For propagation and transition delay times at V_{CC} = 6.0 V, decrease limit by a factor of .85.
8/ Total supply current = I_{CC} + $I_{CC\Delta}$.

TABLE IA. Calculated f_{MAX} at -55/+25°C case temperature.

V_{CC}	T_C = °C +125	T_C = °C -55/+25
2.0 V	0.2X	0.2Y
4.5 V	X = 1	1.33X = Y
6.0 V	1.18X	1.18Y

NOTE: Normalized numbers (+125°C = 1). The 2.0 V and 6.0 V numbers are derived from their 4.5 V integer value (rounding off according 5/4).

TABLE IB. Calculated dynamic values at -55/+25°C case temperature.

V_{CC}	T_C = °C	
	+125	-55/+25
2.0 V	5	5 x 0.75
4.5 V	1	0.75
6.0 V	0.85	0.85 x 0.75

NOTE: Normalized numbers (+125°C - 1). The 2.0 V and 6.0 V volt numbers are derived from their 4.5 V integer value (rounding off according 5/4).

3.6.1. Total dose radiation hardness identifier. The total dose radiation hardness identifier shall be in accordance with MIL-M-38510 and 4.5.4 herein.

3.6.2 Serialization. All class S devices shall be serialized in accordance with MIL-M-38510.

3.6.3 Correctness of indexing and marking. All devices shall be subjected to the final electrical tests specified in table II after part number marking to verify that they are correctly indexed and identified by part number. Optionally, an approved electrical test may be devised especially for this requirement.

3.7 Microcircuit group assignment. The devices covered by this specification shall be in microcircuit group number 38 (see MIL-M-38510, appendix E).

4. QUALITY ASSURANCE PROVISIONS

4.1 Sampling and inspection. Sampling and inspection procedures shall be in accordance with MIL-M-38510 and methods 5005 and 5007, as applicable, of MIL-STD-883, except as modified herein.

4.2 Screening. Screening shall be in accordance with method 5004 of MIL-STD-883, and shall be conducted on all devices prior to qualification and quality conformance inspection. The following additional criteria shall apply:

a. Delete the sequence specified in 3.1.10 through 3.1.14 of method 5004 and substitute lines 1 through 7 of table II herein.

b. Burn-in (method 1015 of MIL-STD-883).

(1) Static tests (test condition A) using circuit shown on figure 3, or equivalent. Ambient temperature (T_A) shall be +125°C minimum. Test duration for each static test shall be 24 hours minimum for class S devices and in accordance with table I of method 1015 for class B devices.

(2) Dynamic test (test condition D) using circuit shown on figure 3, or equivalent. Ambient temperature shall be +125°C minimum. Test duration shall be in accordance with table I of method 1015.

c. Interim and final electrical parameters shall be as specified in table II herein.

d. For class S devices, post dynamic burn-in, or class B devices, post static burn-in, electrical parameter measurements may, at the manufacturer's option, be performed separately or included in the final electrical parameter requirements.

TABLE II. Burn-in and electrical test requirements.

Line no.	Applicable tests and MIL-STD-883 test method	Class S device 1/				Class B device 1/			
		Reference paragraph	Table III subgroups 2/ 4/	Table IV delta limits 3/	Test circuit figure	Reference paragraph	Table III subgroups 2/ 4/	Table IV delta limits 3/	Test circuit figure
1	Interim electrical parameters (method 5004)		1				1		
2	Static burn-in I (method 1015)	4.2b 4.5.2	Reqd		3		Not reqd		
3	Same as line 1		1	Δ					
4	Static burn-in II (method 1015)	4.5.2 4.2b	Reqd		3		Reqd 5/		3
5	Same as line 1	4.2d	1*	Δ		4.2d	1*	Δ	
6	Dynamic burn-in (method 1015)	4.2b 4.5.2	Reqd		3		Not reqd		
7	Same line 1	4.2d	1	Δ					
8	Final electrical parameters (method 5005)		1*,2,3,7 8,9				1*,2,7, 9 5/		
9	Group A test requirements (method 5005)	4.4.1	1,2,3,4, 7,8,9, 10,11			4.4.1	1,2,3,4, 7,8,9, 10,11		3
10	Group B end-point electrical parameters (method 5005)	4.4.2	†1,2,3,7, 8,9,10, 11	Δ	3		†1		
11	Group C end-point electrical parameters (method 5005)					4.4.3	1,2	Δ	3
12	Group D end-point electrical parameters (method 5005)	4.4.4	1,2,3			4.4.4	1,2		

1/ Blank spaces indicate tests are not applicable.
2/ * indicates PDA applies to subgroup 1 (see 4.2.1).
3/ Δ indicates delta limit shall be required only on table III subgroup 1, where specified, and the delta values shall be computed with reference to the previous interim electrical parameters.
4/ † indicates also applies to electrostatic discharge sensitivity tests.
5/ The device manufacturer may at his option either complete subgroup 1 electrical parameter measurements, including delta measurements, within 96 hours after burn-in completion (removal of bias); or may complete subgroup 1 electrical measurements without delta measurements within 24 hours after burn-in completion (removal of bias).

4.2.1 Percent defective allowable (PDA).

a. The PDA for class S devices shall be 5 percent for static burn-in and 5 percent for dynamic burn-in, based on the exact number of devices submitted to each separate burn-in.

b. Static burn-in I and II failures shall be cumulative for determining the PDA.

c. The PDA for class B devices shall be in accordance with MIL-M-38510 for static burn-in. Dynamic burn-in is not required.

d. Those devices whose measured characteristics, after burn-in, exceed the specified delta (Δ) limits or electrical parameter limits specified in table III, subgroup 1, are defective and shall be removed from the lot. The verified failures divided by the total number of devices in the lot initially submitted to burn-in shall be used to determine the percent defective for the lot and the lot shall be accepted or rejected based on the specified PDA.

4.3 Qualification inspection. Qualification inspection shall be in accordance with MIL-M-38510. Inspections to be performed shall be those specified in method 5005 of MIL-STD-883 and herein for groups A, B, C, D, and E inspections (see 4.4.1 through 4.4.5).

4.4 Quality conformance inspection. Quality conformance inspection shall be in accordance with MIL-M-38510 and as specified herein. Inspections to be performed shall be those specified in method 5005 of MIL-STD-883 and herein for groups A, B, C, D, and E inspections (see 4.4.1 through 4.4.5).

4.4.1 Group A inspection. Group A inspection shall be in accordance with table I of method 5005 of MIL-STD-883 and as follows:

a. Tests shall be performed in accordance with table II herein.

b. Subgroups 5 and 6 of table I of method 5005 of MIL-STD-883 shall be omitted.

c. Subgroup 4 (C_I, C_O, and C_C where applicable), measurements shall be measured only for initial qualification and after process or design changes which may affect input capacitance. Capacitance shall be measured between the designated terminal and GND at a frequency of 1 MHz.

d. Subgroups 9 and 11 shall be measured only for initial qualification and after process or design changes which may affect dynamic performance.

4.4.2 Group B inspection. Group B inspection shall be in accordance with table II of method 5005 of MIL-STD-883 and as follows:

a. Class S steady-state life test circuits shall be submitted to the qualifying activity for approval. When the alternate steady-state life test is used, the circuit on figure 3, or equivalent, shall be used.

b. Electrostatic discharge sensitivity (ESDS) testing shall be performed in accordance with MIL-STD-883, method 3015. The option to categorize devices as ESD sensitive without performing the test is not allowed. Device types categorized as ESD sensitive shall be further tested using method 3015 modified as follows:

1. Table I pin combinations 4 and 5 shall be deleted.

2. The test sequence specified in paragraph 3.b shall be repeated an additional four times rather than the two specified.

3. Only those device types that pass ESDS testing at 1,000 volts or greater shall be considered as conforming to the requirements of this specification.

c. End-point electrical parameters shall be as specified in table II herein. Delta limits shall apply only to subgroup 5 of group B inspections for class S, and shall consist of tests specified in table IV herein.

Text continues on page 66.

Device type 01

Cases C and D

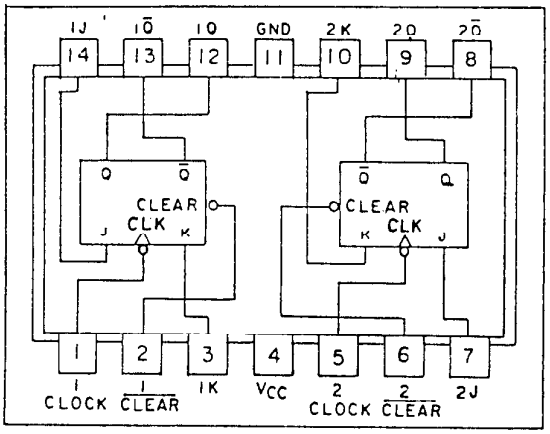

Device type 01

Case 2

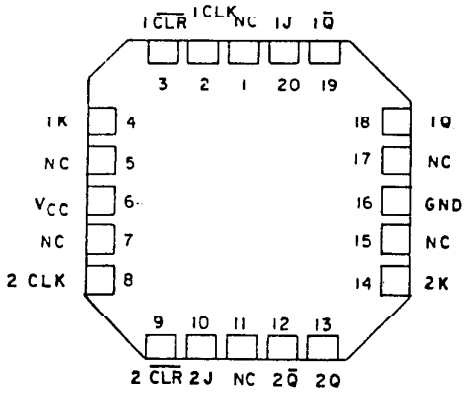

Device types 02 and 52

Cases C and D

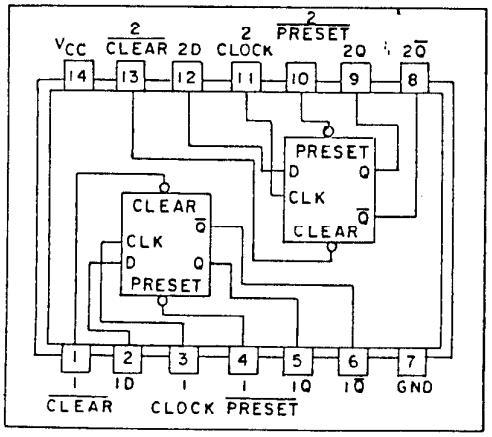

Device types 02 and 52

Case 2

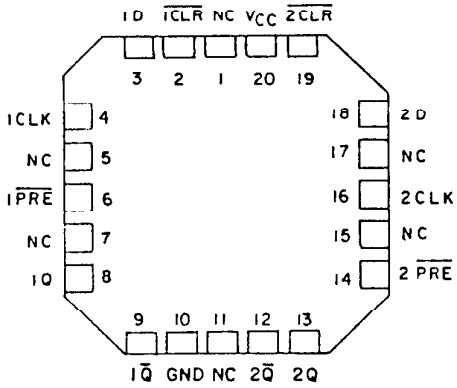

FIGURE 1. Logic diagrams and terminal connections (top view).

Device type 03

Cases C and D

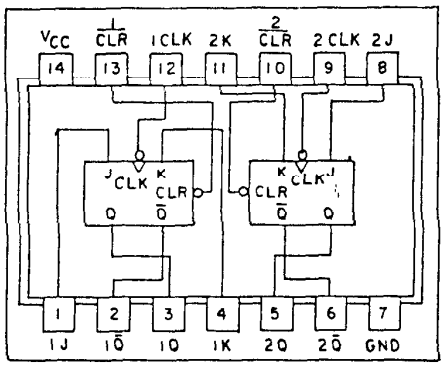

Device type 03

Case 2

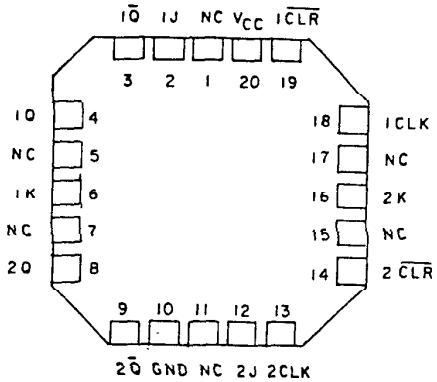

Device type 04

Cases E and F

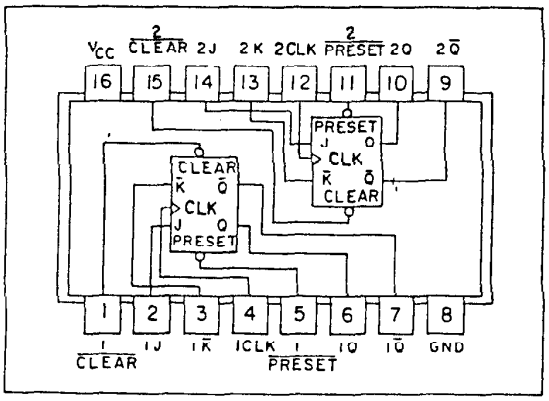

Device type 04

Case 2

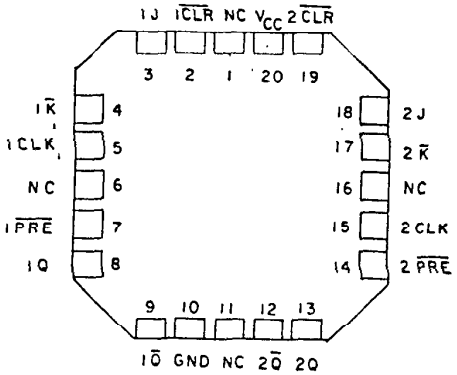

FIGURE 1. Logic diagrams and terminal connections (top view) - Continued.

Device type 05

Cases E and F

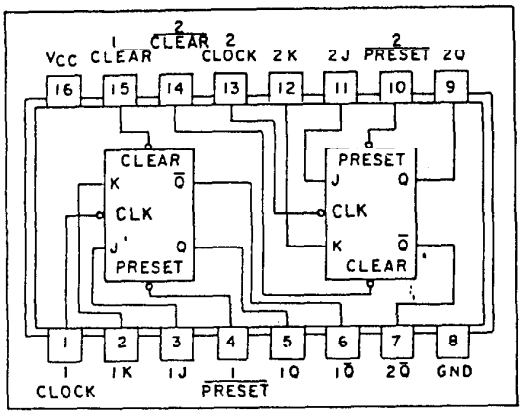

Device type 05

Case 2

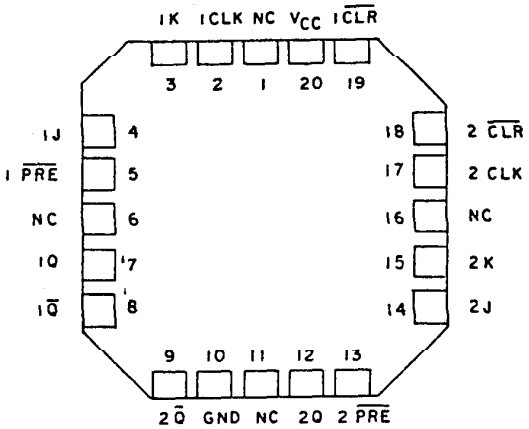

Device type 06

Cases E and F

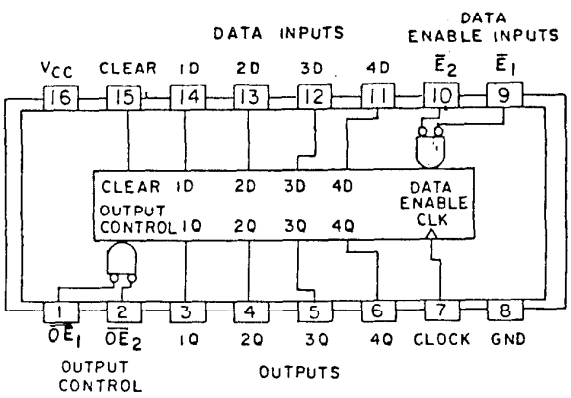

Device type 06

Case 2

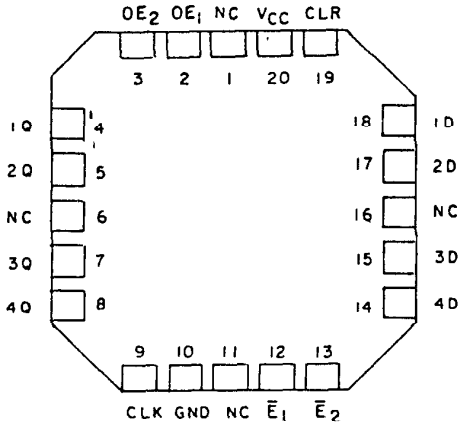

FIGURE 1. Logic diagrams and terminal connections (top view) - Continued.

Device type 07

Cases E and F

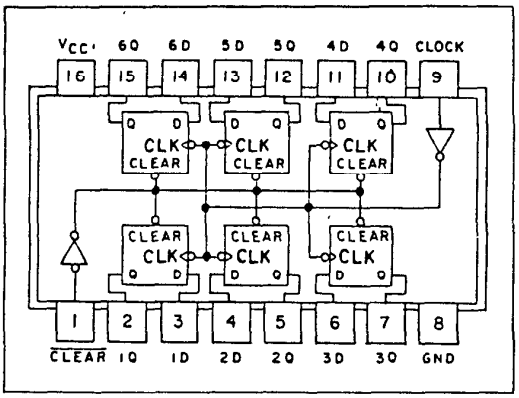

Device type 07

Case 2

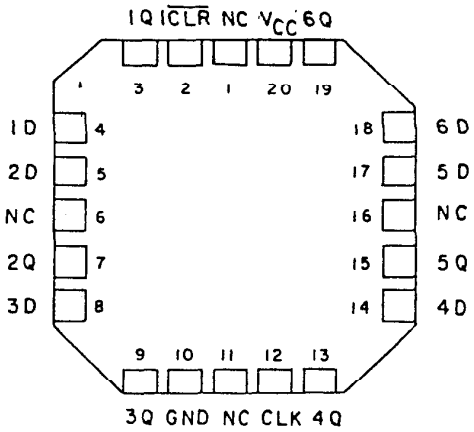

Device type 08

Cases E and F

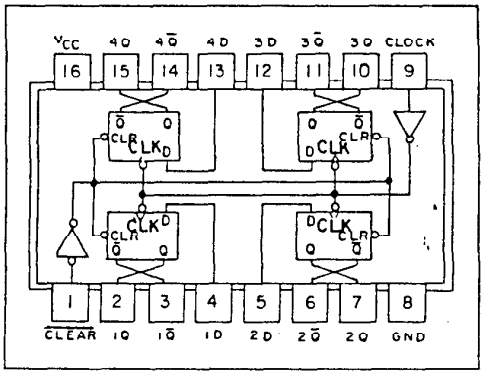

Device type 08

Case 2

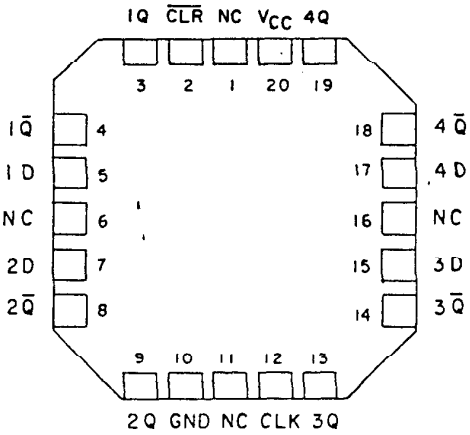

FIGURE 1. Logic diagrams and terminal connections (top view) - Continued.

Device type 01

Inputs				Outputs	
$\overline{CLR}$	CLK	J	K	Q	$\overline{Q}$
L	X	X	X	L	H
H	↓	L	L	Q_0	$\overline{Q}_0$
H	↓	H	L	H	L
H	↓	L	H	L	H
H	↓	H	H	Toggle	
H	H	X	X	Q_0	$\overline{Q}_0$

X pins have no effect on output.

Device types 02 and 52

Inputs				Outputs	
PRE	$\overline{CLR}$	CLK	D	Q	$\overline{Q}$
L	H	X	X	H	L
H	L	X	X	L	H
L	L	X	X	H*	H*
H	H	↑	H	H	L
H	H	↑	L	L	H
H	H	X	X	Q_0	$\overline{Q}_0$

*This configuration is nonstable
X Pins have on effect on output.

Device type 03

Inputs				Outputs	
$\overline{CLR}$	CLK	J	K	Q	$\overline{Q}$
L	X	X	X	L	H
H	↓	L	L	Q_0	$\overline{Q}_0$
H	↓	H	L	H	L
H	↓	L	H	L	H
H	↓	H	H	Toggle	
H	H	X	X	Q_0	$\overline{Q}_0$

X pins have no effect on output.

Device type 04

Inputs					Outputs	
PRE	$\overline{CLR}$	CLK	J	K	Q	$\overline{Q}$
L	H	X	X	X	H	L
H	L	X	X	X	L	H
L	L	X	X	X	H*	H*
H	H	↑	L	L	L	H
H	H	↑	H	L	Toggle	
H	H	↑	L	H	Q_0	$\overline{Q}_0$
H	H	↑	H	H	H	L
H	H	L	X	X	Q_0	$\overline{Q}_0$

*This configuration is nonstable
X Pins have on effect on output.

FIGURE 2 Truth tables.

Device type 05

Inputs					Outputs	
$\overline{PRE}$	$\overline{CLR}$	CLK	J	K	Q	$\overline{Q}$
L	H	X	X	X	H	L
H	L	X	X	X	L	H
L	L	X	X	X	H*	H*
H	H	↓	L	L	Q_0	$\overline{Q}_0$
H	H	↓	H	L	H	L
H	H	↓	L	H	L	H
H	H	↓	H	H	Toggle	
H	H	H	X	X	Q_0	$\overline{Q}_0$

*This configuration is nonstable
X Pins have on effect on output.

Device type 06

CLR	$\overline{CLK}$	Data enable $\overline{E}_1$	Data enable $\overline{E}_2$	Data D	Output Q
H	X	X	X	X	L
L	L	X	X	X	Q_0
L	↑	H	X	X	Q_0
L	↑	X	H	X	Q_0
L	↑	L	L	L	L
L	↑	L	L	H	H

When either $\overline{OE}_1$ or $\overline{OE}_2$ (or both) is (are) high the output is disable to the high Z state; however, sequential operation of the flip-flops is not affected. X pins have no effect on output.

Device type 07

Inputs			Outputs
$\overline{CLR}$	CLK	D	Q
L	X	X	L
H	↑	H	H
H	↑	L	L
H	L	X	Q_0

X pins have no effect on output

Device type 08

Inputs			Outputs	
CLR	$\overline{CLK}$	D	Q	$\overline{Q}$
L	X	X	L	H
H	↑	H	H	L
H	↑	L	L	H
H	L	X	Q_0	$\overline{Q}_0$

X pins have no effect on output

FIGURE 2. Truth tables - Coninued.

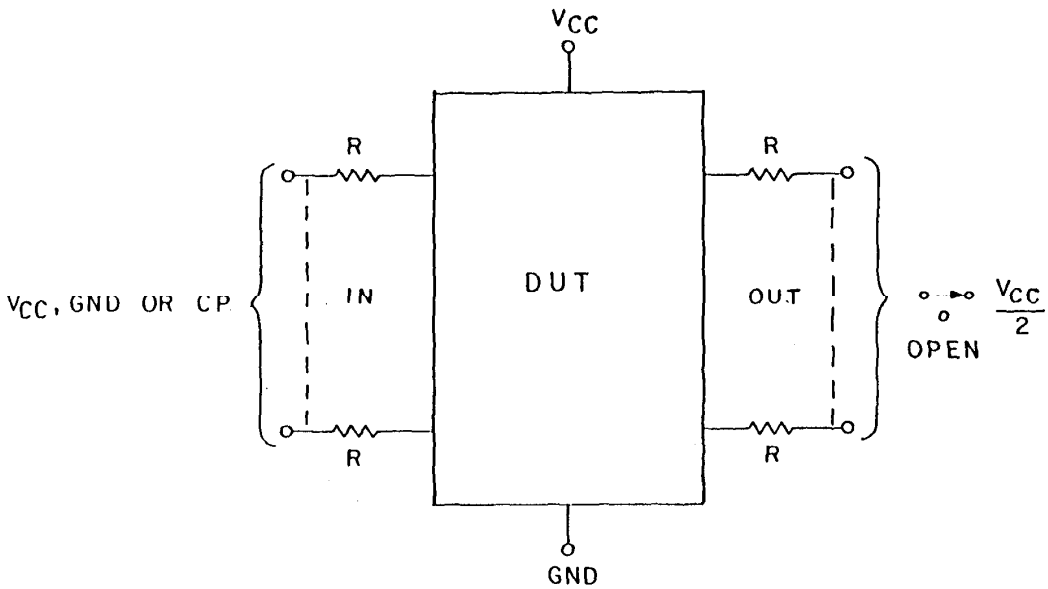

NOTES:
1. For static burn-in I, all inputs shall be connected to GND. Outputs shall be open or connected to $V_{CC}/2$. Resistors are optional on outputs if open. Resistors are required on inputs and outputs connected to $V_{CC}/2$. R = 470Ω to 47 kΩ.
2. For static burn-in II. all inputs shall be connected through a resistor to V_{CC}. Outputs shall be open or connected to $V_{CC}/2$. Resistors are optional on outputs if open. Resistors are required on inputs and outputs connected to $V_{CC}/2$. R = 470Ω to 47 kΩ.
3. For dynamic burn-in, the generator shall be connected to the clock and J - K inputs and reset shall be connected to V_{CC}. Outputs shall be connected to $V_{CC}/2$ +0.5 V through the resistors. R = 680Ω to 1 kΩ for outputs, 470Ω to 47 kΩ for inputs.
4. CP = 25 kHz to 1 MHz square wave; duty cycle = 50 ±15 percent; $V_{IH} \geq 4.5$ V to V_{CC} V_{IL} = 0 ±.5 V, transition time ≤ 0.5 µs.
5. V_{CC} = 6.0 V +0.0 V, -0.5 V. V_{CC} = 5.5 V +0.0 V, - 0.5 V for device type 52.

FIGURE 3. Burn in and life test circuit.

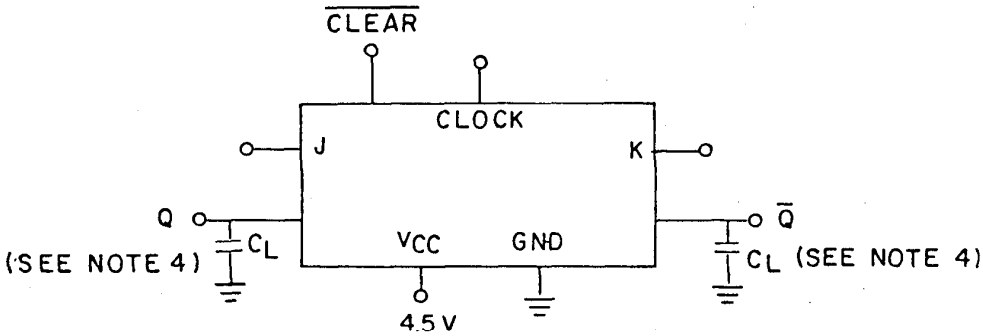

TEST CIRCUIT

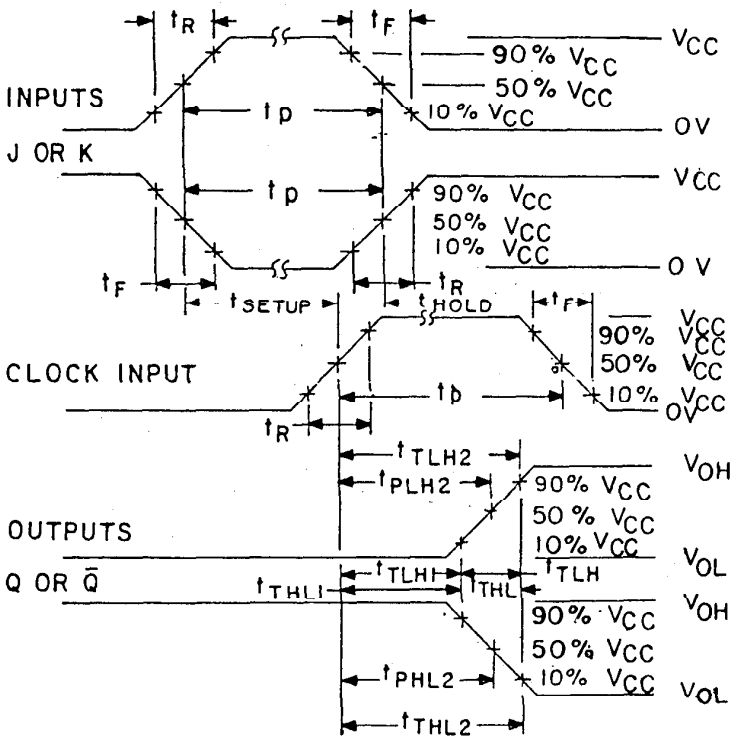

VOLTAGE WAVEFORMS

NOTES:

1. Clock input pulse characteristics: $t_R = t_F \leq 6$ ns; t_P (clock) ≤ 27 ns.
2. J or K input pulse characteristics: $t_R = t_F \leq 6$ ns; $t_{SETUP} \leq 30$ ns; $t_{HOLD} \leq 8$ ns; t_P (data) ≤ 38 ns.
3. The clock input characteristics for f_{MAX} are as follows: $t_R = t_F \leq 6$ ns; t_P (clock) ≤ 22 ns; PRR ≥ 23 MHz.
4. C_L = 50 pF ±10 percent (including probe and jig capacitance).
5. Voltage measurements are to be made with respect to network ground terminal.
6. $t_{TLH} = t_{TLH2} - t_{TLH1}$; $t_{THL} = t_{THL2} - t_{THL1}$.

FIGURE 4. Synchronous switching test circuit (device type 01).

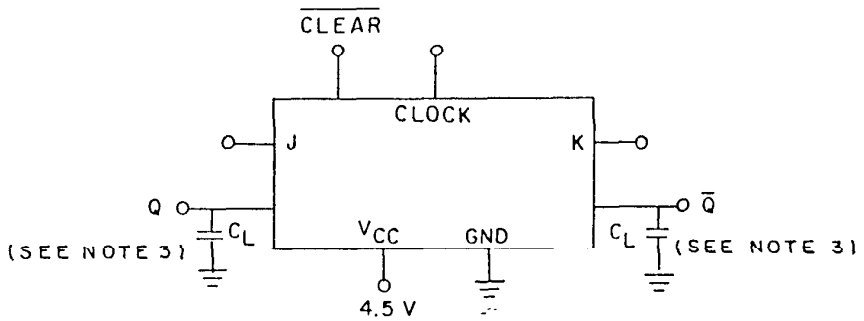

TEST CIRCUIT

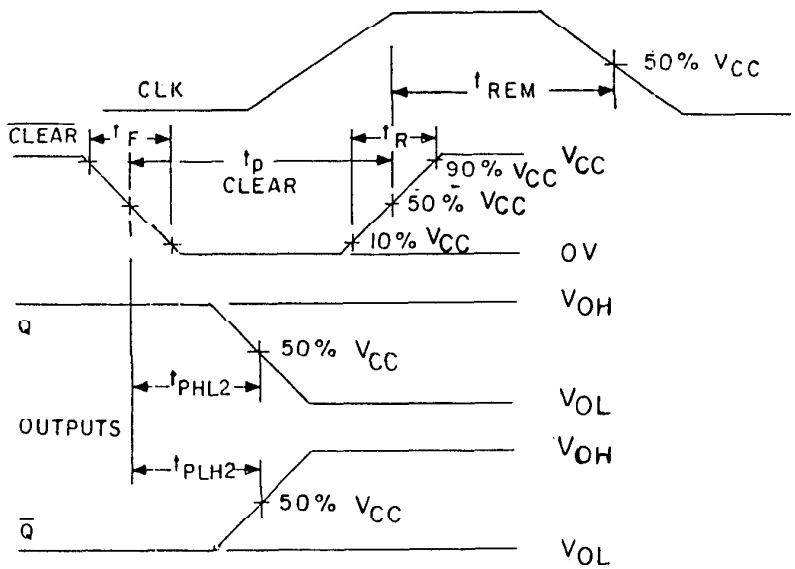

VOLTAGE WAVEFORMS

NOTES:

1. $\overline{\text{Clear}}$ pulses dominates regardless of the state of the other inputs.
2. $\overline{\text{Clear}}$ input pulse characteristics are as follows: $t_R = t_F \leq 6$ ns; t_P (clear) ≤ 30 ns; $t_{REM} \leq 30$ ns;
3. C_L = 50 pF ±10 percent (including probe and jig capacitance).
4. Clock pulse prior to test with inputs biased to place output at the appropriate level for test.
5. Voltage measurements are to be made with respect to network ground terminal.

FIGURE 4. $\overline{\text{Clear}}$ switching test circuit (devices type 01) - Continued.

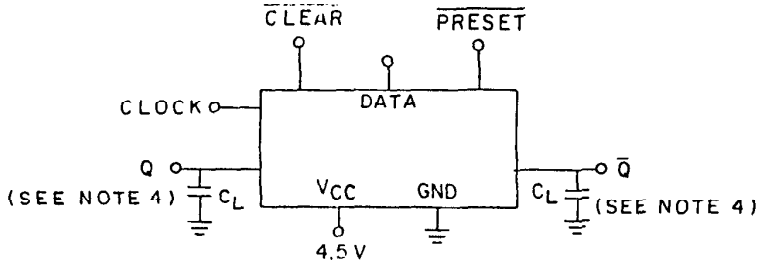

TEST CIRCUIT

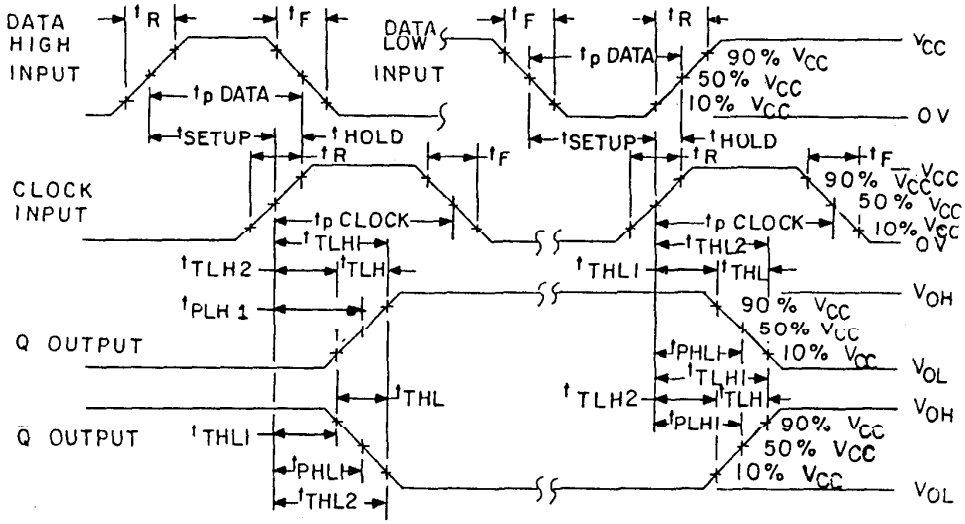

VOLTAGE WAVEFORMS

NOTES:
1. Clock input pulse characteristics: $t_R = t_F \leq 6$ ns. t_p (clock) ≤ 30 ns.
2. Data input pulse characteristics: $t_R = t_F \leq 6$ ns. t_p (data) ≤ 38 ns (for device type 52), t_p (data) ≤ 33 ns; $t_{SETUP} \leq 30$ ns; $t_{HOLD} \leq 8$ ns (for device type 52, $t_{HOLD} \leq 3$ ns); PRR ≥ 1 MHz.
3. The clock input characteristics for f_{MAX} are as follows: $t_R = t_F \leq 6$ ns; t_p (clock) ≤ 24 ns; PRR ≥ 21 MHz.
4. $C_L = 50$ pF ±10 percent (including probe and jig capacitance).
5. Voltage measurements are to be made with respect to network ground terminal. The input signal(s) for HCT device type 52 will be 0 to 3 V; however, the 50 percent V_{CC} measuring point is 1.3 V for input and output.
6. $t_{TLH} = t_{TLH1} - t_{TLH2}$; $t_{THL} = t_{THL2} - t_{THL1}$.

FIGURE 4. Synchronous switching test circuit (device types 02 and 52) - Continued.

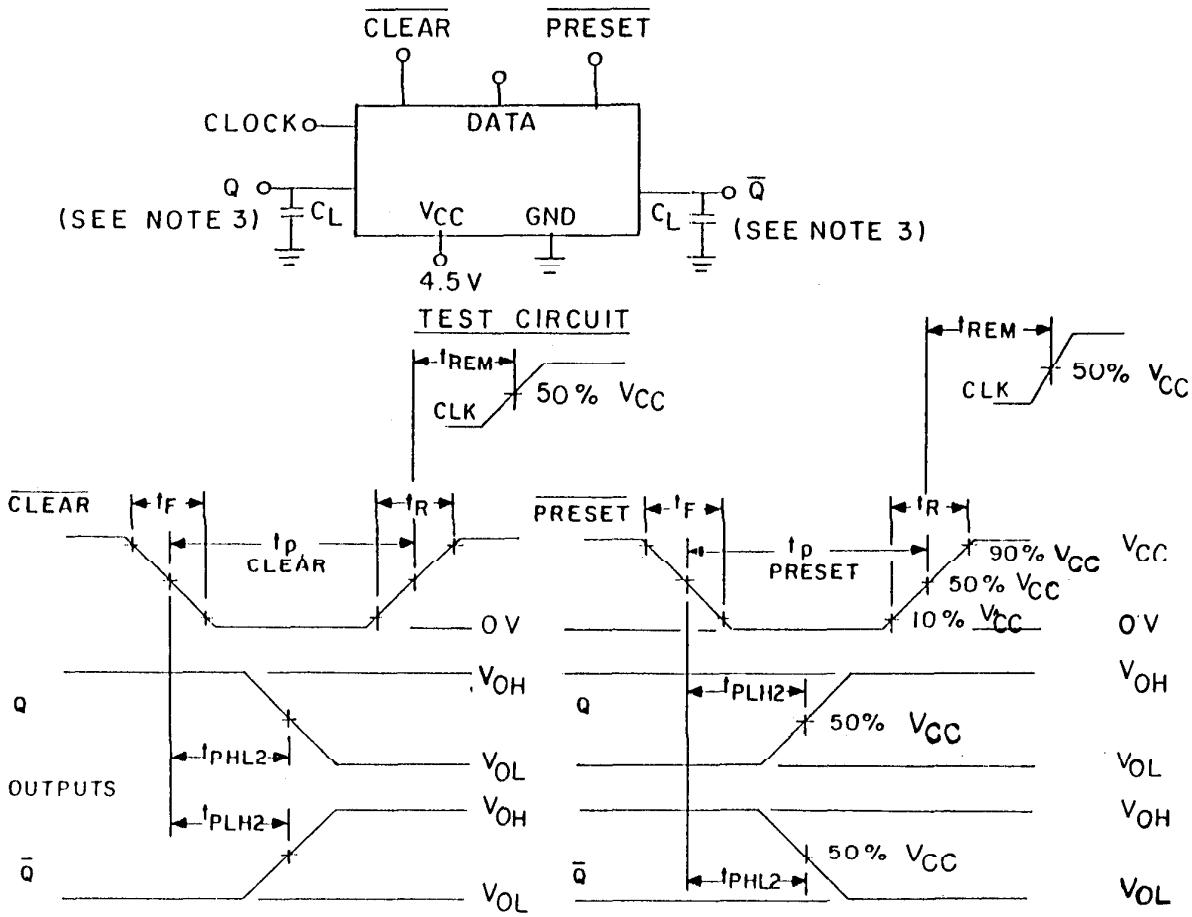

VOLTAGE WAVEFORMS

NOTES:

1. Clear and preset pulses are active low and dominates regardless of the state of the clock and data inputs.
2. Clear input pulse characteristics are as follows: $t_R = t_F \leq 6$ ns; tp (clear) = tp (preset) $\leq$ 30 ns; $t_{REM} \leq 38$ ns;
3. C_L = 50 pF ±10 percent (including probe and jig capacitance).
4. While testing the Clear input at a logic "0" level, Preset will have a logic "1" level applied. While testing the Preset input at a logic "0" level, Clear will have a logic "1" applied.
5. Voltage measurements are to be made with respect to network ground terminal. The input signal(s) for HCT device type 52 will be 0 - 3 volts; however, the 50 percent measurement point is 1.3 V for inputs and outputs.

FIGURE 4. Clear switching test circuit (devices types 02 and 52) - Continued.

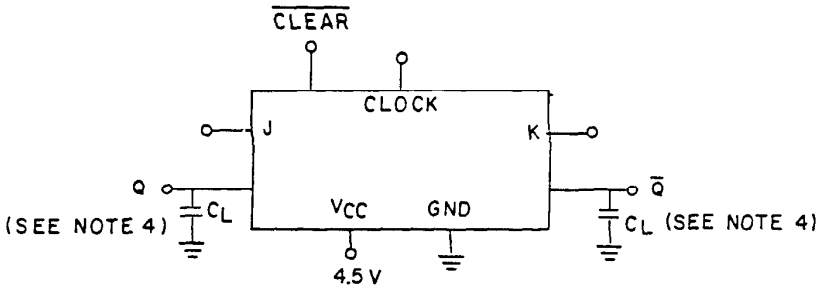

TEST CIRCUIT

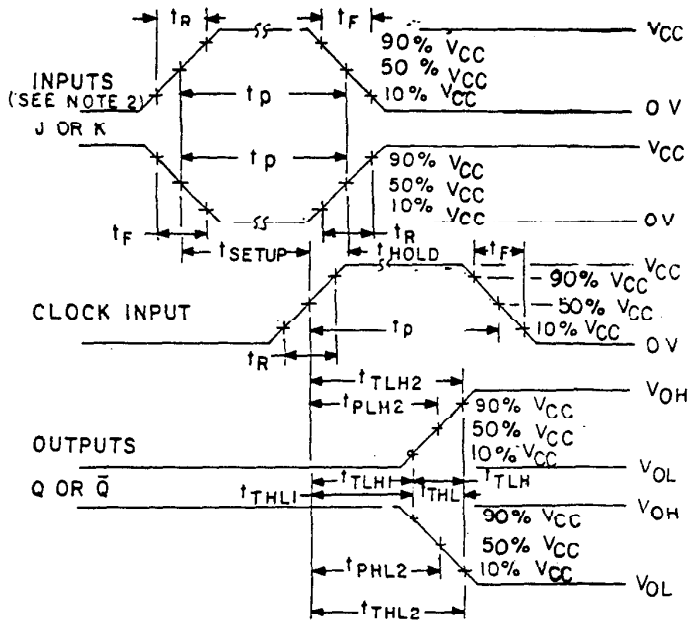

VOLTAGE WAVEFORMS

NOTES:

1. Clock input pulse characteristics: $t_R = t_F \leq 6$ ns; tp (clock) ≤ 27 ns.
2. J or K input pulse characteristics: $t_R = t_F \leq 6$ ns; t_P (J or K) ≤ 38 ns; $t_{HOLD} \leq 8$ ns; $t_{SETUP} \leq 30$ ns; PRR ≤ 1 MHz.
3. The clock input characteristics for f_{MAX} are as follows: $t_R = t_F \leq 6$ ns; t_P (clock) ≤ 22 ns; PRR ≥ 23 MHz.
4. C_L = 50 pF ±10 percent (including probe and jig capacitance).
5. Voltage measurements are to be made with respect to network ground terminal.
6. $t_{TLH} = t_{TLH2} - t_{TLH1}$; $t_{THL} = t_{THL2} - t_{THL1}$.

FIGURE 4. Synchronous switching test circuit (device type 03) - Continued.

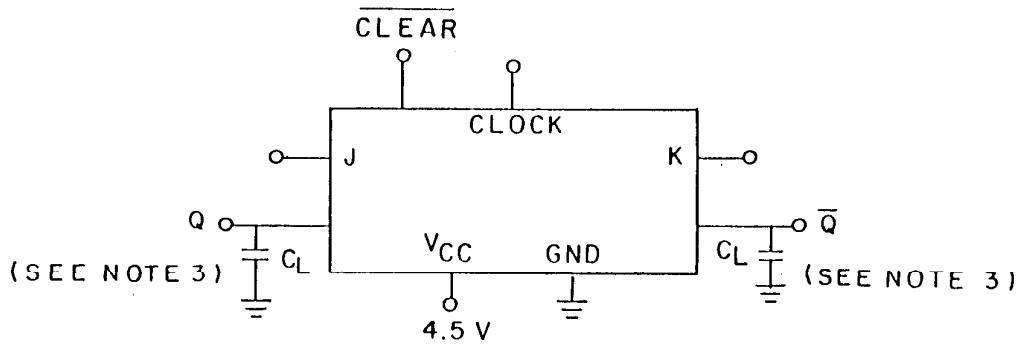

TEST CIRCUIT

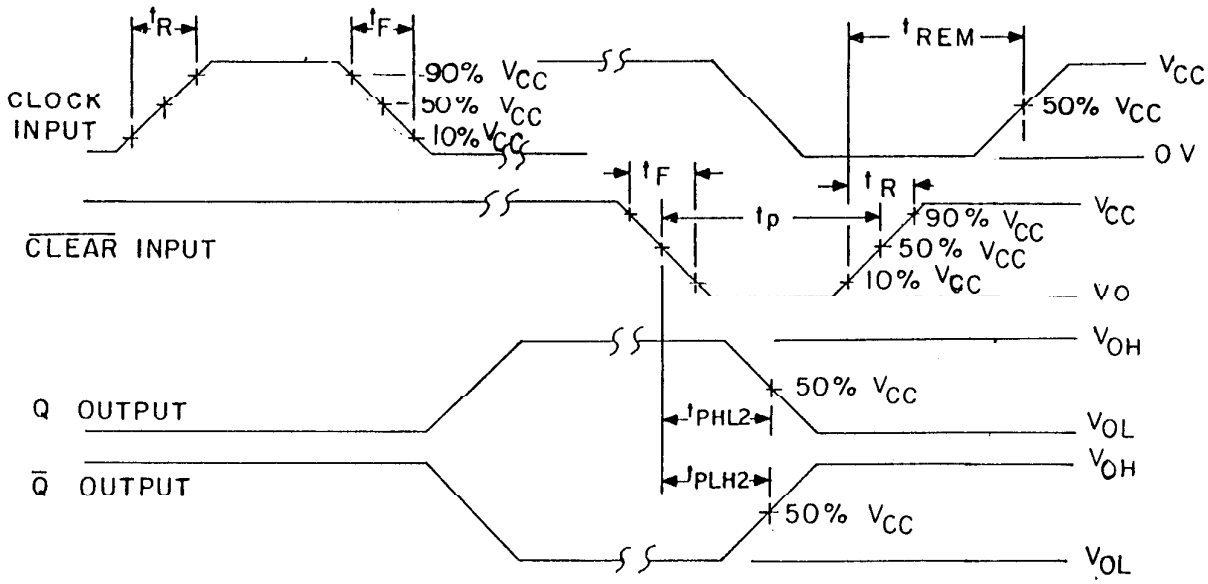

VOLTAGE WAVEFORM

NOTES:

1. Clear pulses dominates regardless of the state of the other inputs.
2. Clear input pulse characteristics are as follows: $t_R = t_F \leq 6$ ns; t_P (clear) ≤ 30 ns; $t_{REM} \leq 30$ ns;
3. C_L = 50 pF ±10 percent (including probe and jig capacitance).
4. Clock pulse prior to test with inputs biased to place output at the appropriate level for test.
5. Voltage measurements are to be made with respect to network ground terminal.

FIGURE 4. Clear switching test circuit (devices type 03) - Continued.

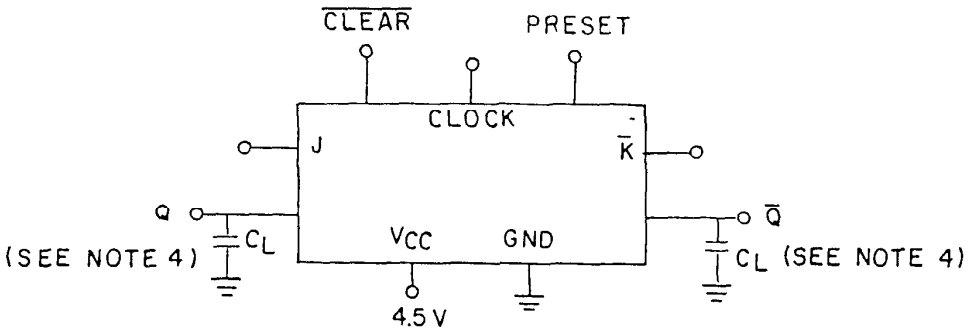

TEST CIRCUIT

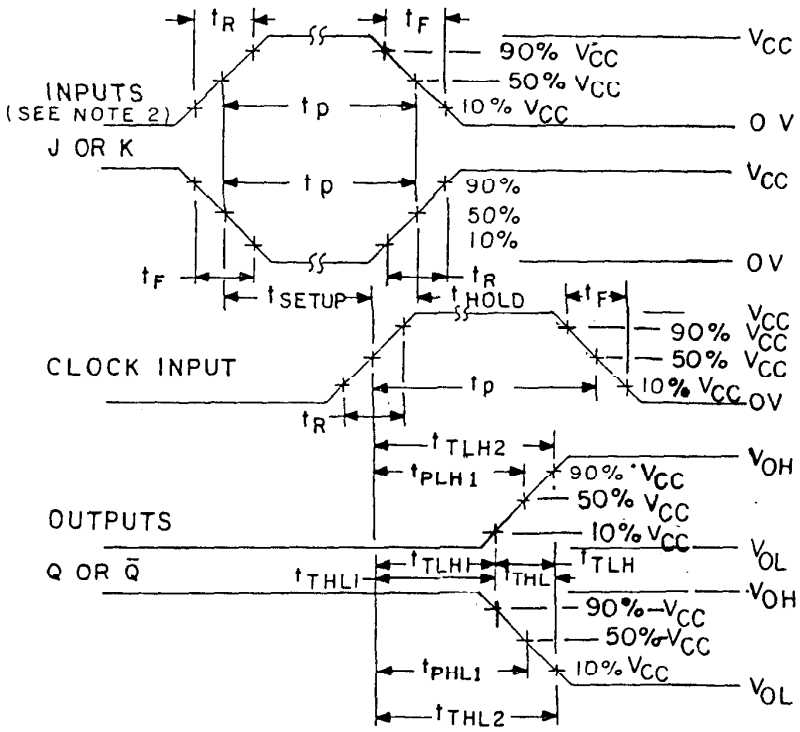

VOLTAGE WAVEFORMS

NOTES:

1. Clock input pulse characteristics: $t_R = t_F \leq 6$ ns; t_p (clock) ≤ 27 ns.
2. J or K input pulse characteristics: $t_R = t_F \leq 6$ ns; t_p (J or K) ≤ 38 ns; $t_{HOLD} \leq 8$ ns; $t_{SETUP} \leq 30$ ns.
3. The clock input characteristics for f_{MAX} are as follows: $t_R = t_F \leq 6$ ns; t_p (clock) ≤ 22 ns; PRR ≥ 23 MHz.
4. $C_L = 50$ pF ±10 percent (including probe and jig capacitance).
5. Voltage measurements are to be made with respect to network ground terminal.
6. $t_{TLH} = t_{TLH2} - t_{TLH1}$; $t_{THL} = t_{THL2} - t_{THL1}$.

FIGURE 4. Synchronous switching test circuit (device type 03) - Continued.

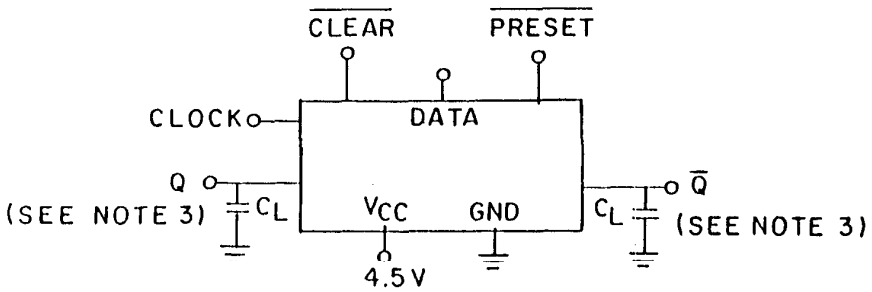

TEST CIRCUIT

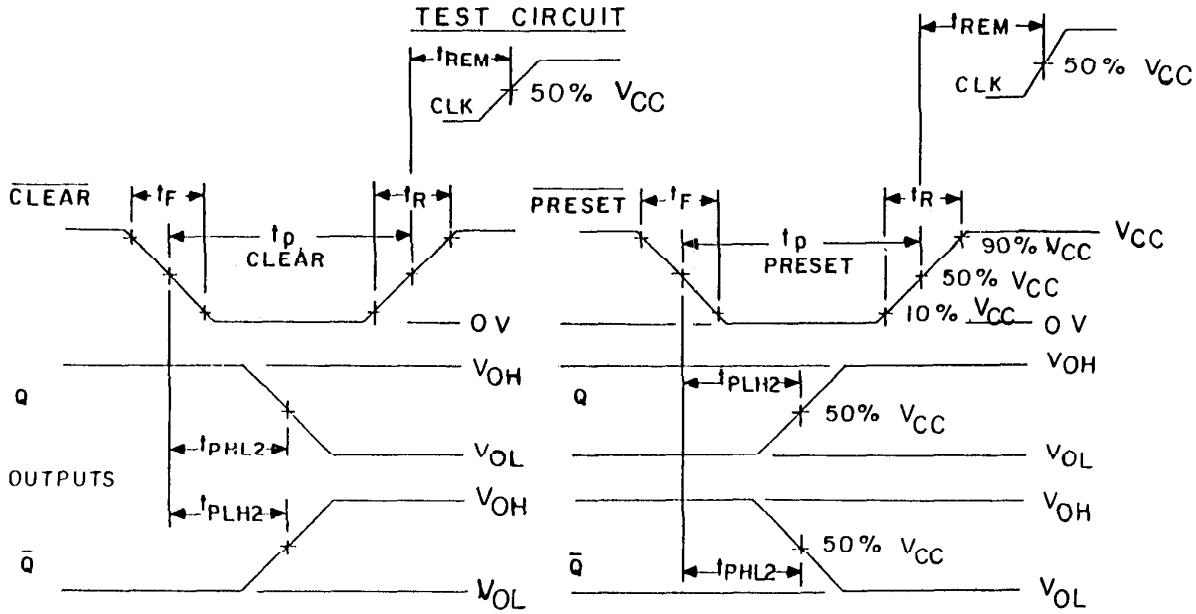

VOLTAGE WAVEFORMS

NOTES:

1. $\overline{\text{Clear}}$ and $\overline{\text{preset}}$ pulses are active low and dominates regardless of the state of the other inputs.
2. $\overline{\text{Clear}}$ input pulse characteristics are as follows: $t_R = t_F \leq 6$ ns; tp (clear or preset) $\leq$ 30 ns; $t_{REM} \leq 30$ ns;
3. C_L = 50 pF ±10 percent (including probe and jig capacitance).
4. May be pulsed prior to test with inputs biased to place output at the appropriate level for test.
5. Voltage measurements are to be made with respect to network ground terminal.

FIGURE 4. $\overline{\text{Clear}}$ and $\overline{\text{Preset}}$ switching test circuit (devices type 04) - Continued.

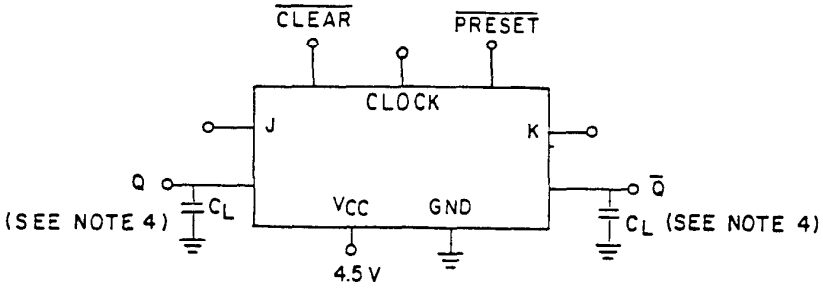

TEST CIRCUIT

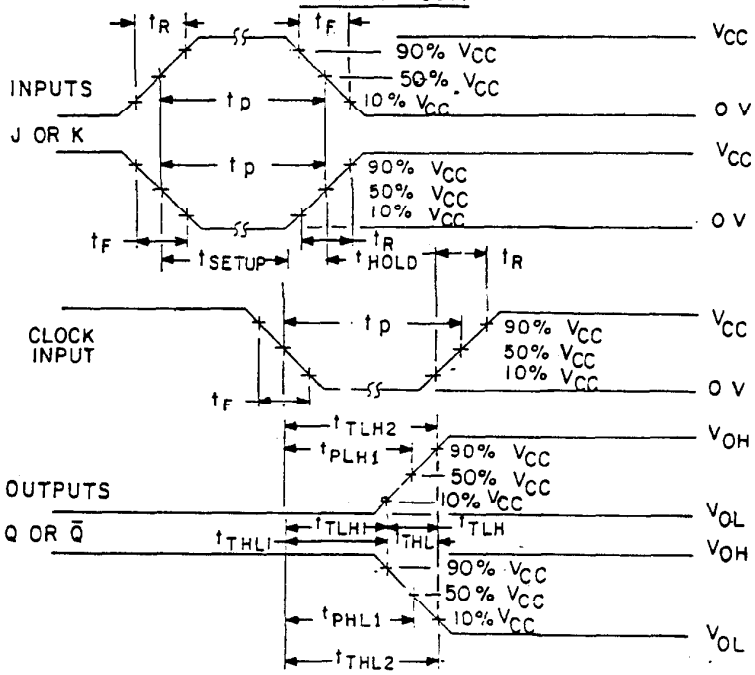

VOLTAGE WAVEFORMS

NOTES:

1. Clock input pulse characteristics: $t_R = t_F \leq 6$ ns; t_p (clock) ≤ 30 ns.
2. J or K input pulse characteristics: $t_R = t_F \leq 6$ ns; t_p (J or K) ≤ 38 ns; $t_{HOLD} \leq 8$ ns; $t_{SETUP} \leq 30$ ns.
3. The clock input characteristics for f_{MAX} are as follows: $t_R = t_F \leq 6$ ns; t_p (clock) ≤ 24 ns; PRR ≥ 21 MHz.
4. C_L = 50 pF ±10 percent (including probe and jig capacitance).
5. Voltage measurements are to be made with respect to network ground terminal.
6. $t_{TLH} = t_{TLH2} - t_{TLH1}$; $t_{THL} = t_{THL2} - t_{THL1}$.

FIGURE 4. Synchronous switching test circuit (device type 05) - Continued.

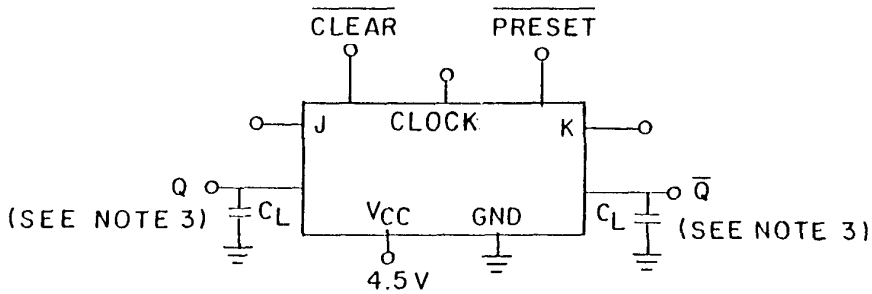

TEST CIRCUIT

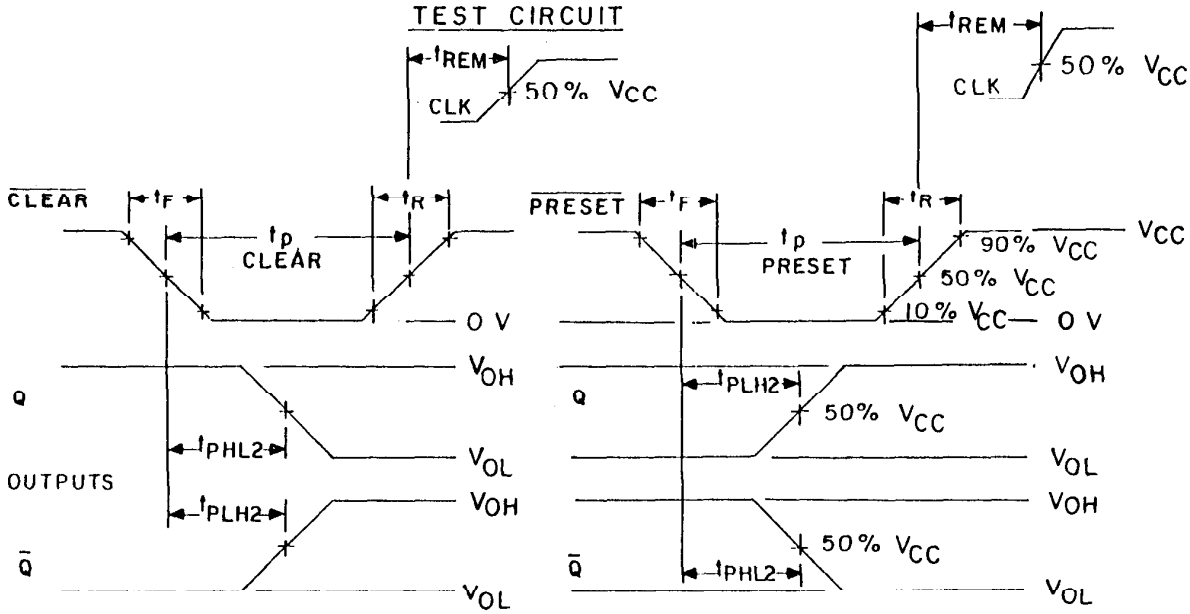

VOLTAGE WAVEFORMS

NOTES:

1. $\overline{\text{Clear}}$ and $\overline{\text{preset}}$ pulses are active low and dominates regardless of the state of the other inputs.
2. $\overline{\text{Clear}}$ and $\overline{\text{preset}}$ input pulse characteristics are as follows: $t_R = t_F \leq 6$ ns; t_p (clear or preset) ≤ 30 ns; $t_{REM} \leq 30$ ns;
3. C_L = 50 pF ±10 percent (including probe and jig capacitance).
4. May be pulsed prior to test with inputs biased to place output at the appropriate level for test.
5. Voltage measurements are to be made with respect to network ground terminal.

FIGURE 4. $\overline{\text{Clear}}$ and $\overline{\text{Preset}}$ switching test circuit (devices type 05) - Continued.

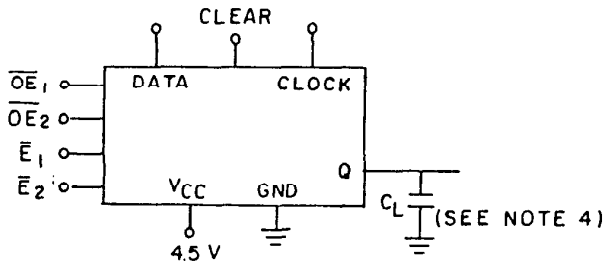

TEST CIRCUIT

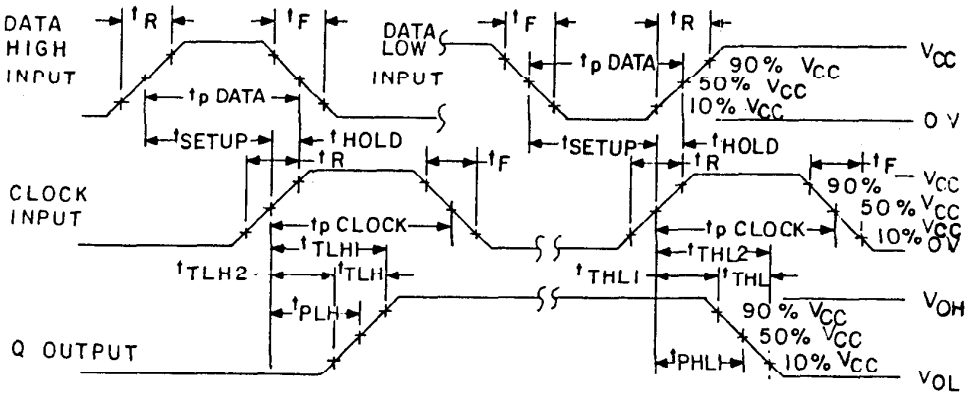

VOLTAGE WAVEFORMS

NOTES:

1. Clock input pulse characteristics: $t_R = t_F \leq 6$ ns; t_p (clock) $\leq$ 27 ns.
2. Data input pulse characteristics: $t_R = t_F \leq 6$ ns; t_p (data) $\leq$ 38 ns; $t_{SETUP} \leq 30$ ns; $t_{HOLD} \leq 8$ ns; PRR $\geq$ 1 MHz.
3. The clock input characteristics for f_{MAX} are as follows: $t_R = t_F \leq 6$ ns; t_p (clock) $\leq$ 22 ns; PRR $\geq$ 23 MHz.
4. C_L = 50 pF ±10 percent (including probe and jig capacitance).
5. $t_{TLH} = t_{TLH2} - t_{TLH1}$; $t_{THL} = t_{THL2} - t_{THL1}$.
6. Voltage measurements are to be made with respect to network ground terminal.

FIGURE 4. Synchronous switching test circuit (device type 06) - Continued.

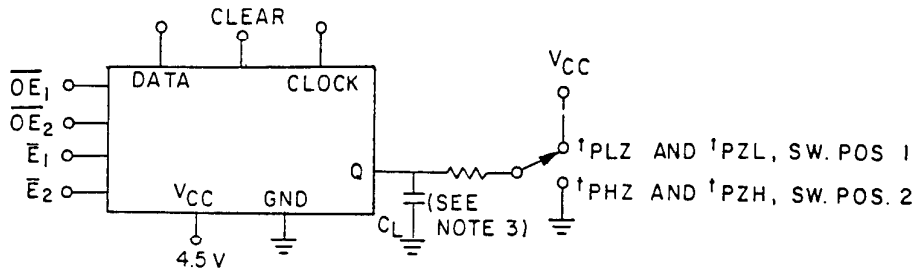

TEST CIRCUIT

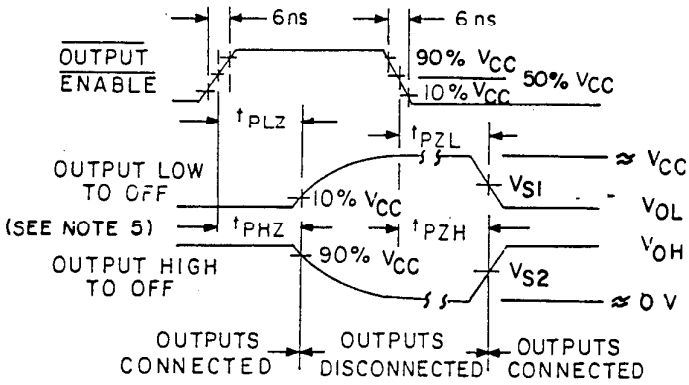

VOLTAGE WAVEFORMS

NOTES:

1. $\overline{OE}_1$ and $\overline{OE}_2$ pulses are active low and one or both must be active to enable the ouptuts
2. $\overline{OE}_1$ and $\overline{OE}_2$ input pulse characteristics are as follows: $t_R = t_F \leq 6$ ns; $t_{pOE_1} = t_{pOE_2} \geq 200$ ns.
3. C_L = 50 pF ±10 percent (including probe and jig capacitance).
4. OE_1 or OE_2 does not affect the sequential operation of the flip-flop.
5. For t_{PHZ} and t_{PZH}, a 1 kΩ resistor is connected between the output and GND terminal. for t_{PZL} and t_{PLZ}, a 1 kΩ resistor is connected between the output and V_{CC} terminal. $V_{S1} = V_{OL} + 0.1\ V\ (V_{OH}-V_{OL})$. $V_{S2} = V_{OH} - 0.1\ V\ (V_{OH}-V_{OL})$.

FIGURE 4. Three-state switching test circuit (device type 06) - Continued.

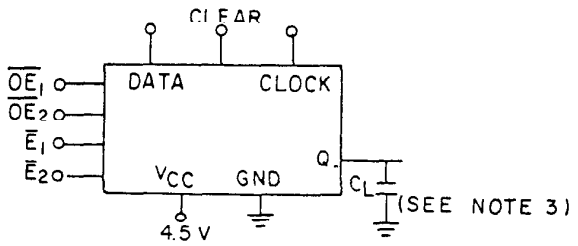

TEST CIRCUIT

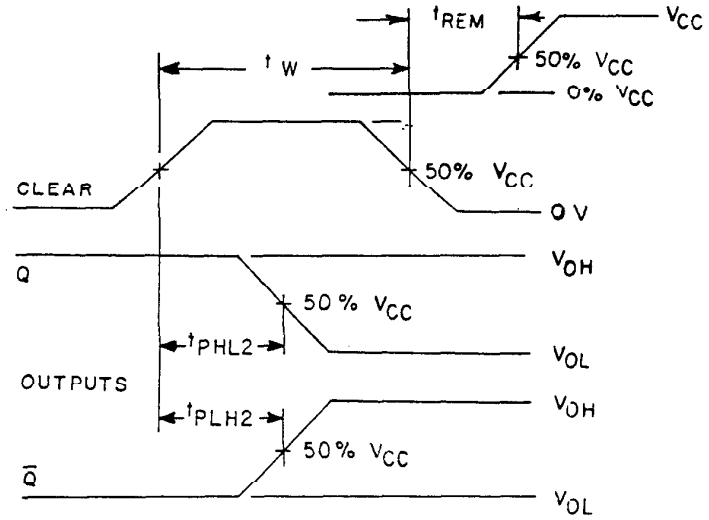

VOLTAGE WAVEFORMS

NOTES:

1. Clear pulses are active high and dominates regardless of the state of the clock and data inputs.
2. Clear input pulse characteristics are as follows: $t_R = t_F \leq 6$ ns; t_P (clear) = t_P (preset) $\leq$ 30 ns; $t_{REM} \leq 27$ ns.
3. C_L = 50 pF ±10 percent (including probe and jig capacitance).
4. Clock pulse prior to test with inputs biased to place output at the appropriate level for test.
5. Voltage measurements are to be made with respect to network ground terminal.

FIGURE 4. Clear switching test circuit (device type 06) - Continued.

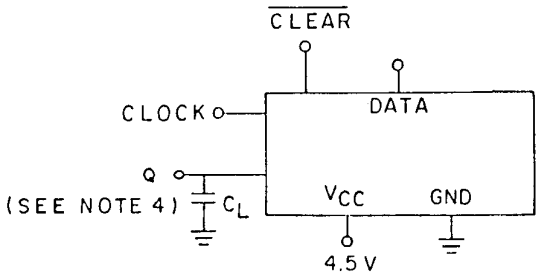

TEST CIRCUIT

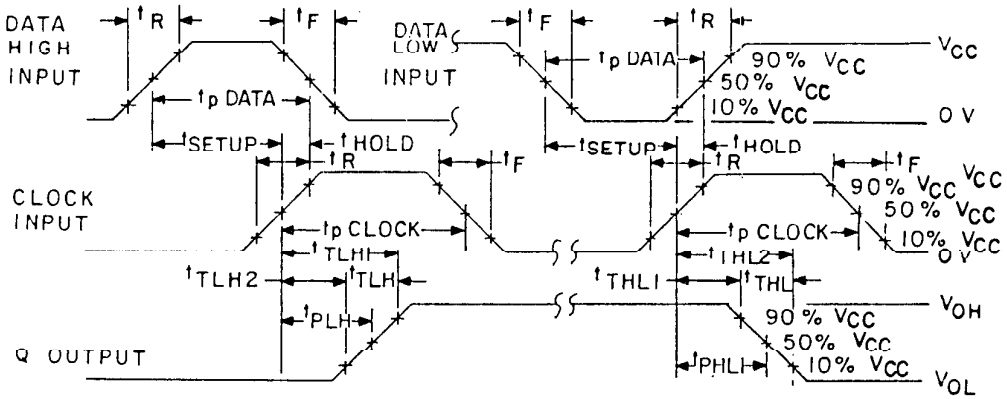

VOLTAGE WAVEFORMS

NOTES:

1. Clock input pulse characteristics: $t_R = t_F \leq 6$ ns; t_p (clock) ≤ 27 ns.
2. Data input pulse characteristics: $t_R = t_F \leq 6$ ns; t_p (data) ≤ 38 ns; $t_{SETUP} \leq 30$ ns; $t_{HOLD} \leq 8$ ns.
3. The clock input characteristics for f_{MAX} are as follows: $t_R = t_F \leq 6$ ns; t_p (clock) ≤ 22 ns; PRR ≥ 23 MHz.
4. C_L = 50 pF ±10 percent (including probe and jig capacitance).
5. Voltage measurements are to be made with respect to network ground terminal.
6. $t_{TLH} = t_{TLH2} - t_{TLH1}$; $t_{THL} = t_{THL2} - t_{THL1}$.

FIGURE 4. Synchronous switching test circuit (device type 07) - Continued.

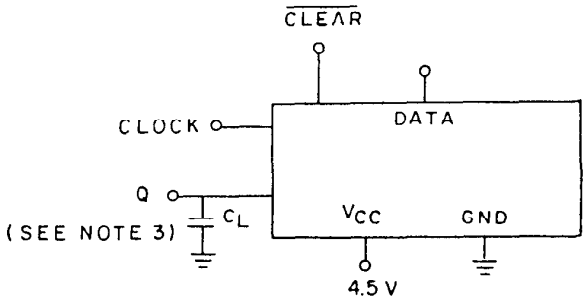

TEST CIRCUIT

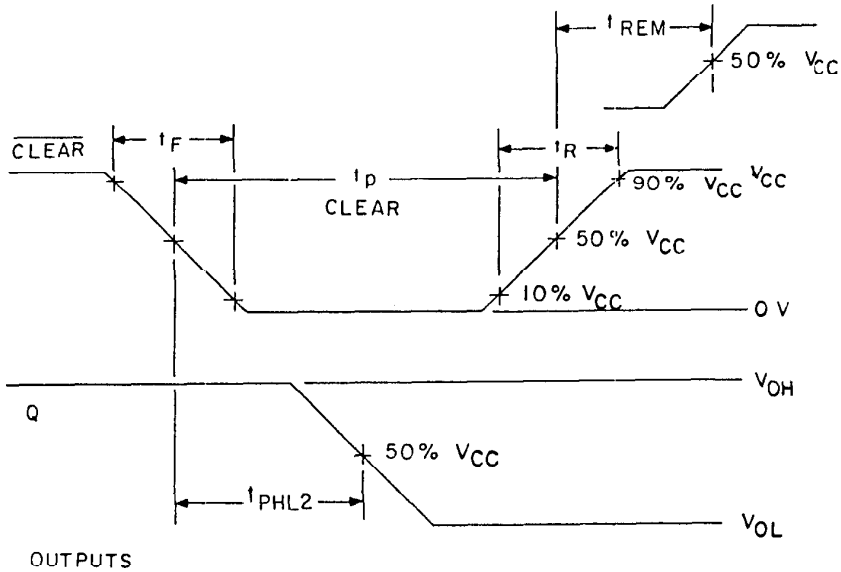

VOLTAGE WAVEFORMS

NOTES:

1. $\overline{\text{Clear}}$ pulses are active high and dominates regardless of the state of the clock and data inputs.
2. $\overline{\text{Clear}}$ input pulse characteristics are as follows: $t_R = t_F \leq 6$ ns; t_p (clear $\leq$ 24 ns; $t_{REM} \leq 30$ ns.
3. C_L = 50 pF ±10 percent (including probe and jig capacitance).
4. Clock pulse prior to test with inputs biased to place output at the appropriate level for test.
5. Voltage measurements are to be made with respect to network ground terminal.

FIGURE 4. $\overline{\text{Clear}}$ switching test circuit (device type 07) - Continued.

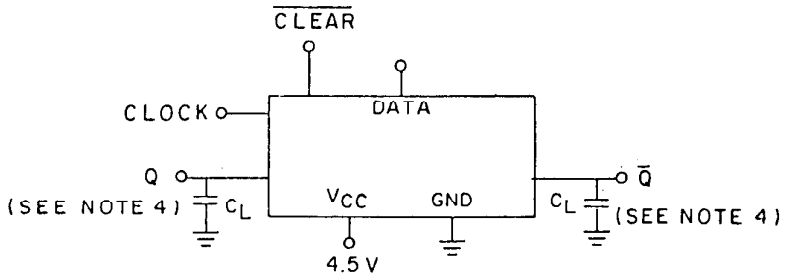

TEST CIRCUIT

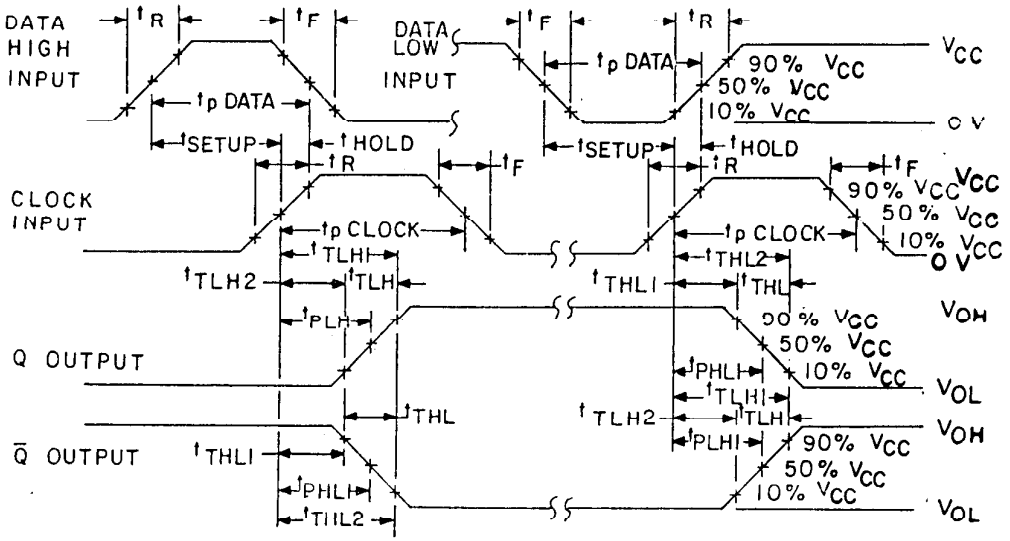

VOLTAGE WAVEFORMS

NOTES:

1. Clock input pulse characteristics: $t_R = t_F \leq 6$ ns; t_p (clock) ≤ 24 ns.
2. Data input pulse characteristics: $t_R = t_F \leq 6$ ns; t_p (data) ≤ 38 ns; $t_{SETUP} \leq 30$ ns; $t_{HOLD} \leq 8$ ns.
3. The clock input characteristics for f_{MAX} are as follows: $t_R = t_F \leq 6$ ns; t_p (clock) ≤ 19 ns; PRR ≥ 26 MHz.
4. C_L = 50 pF ±10 percent (including probe and jig capacitance).
5. Voltage measurements are to be made with respect to network ground terminal.
6. $t_{TLH} = t_{TLH2} - t_{TLH1}$; $t_{THL} = t_{THL2} - t_{THL1}$.

FIGURE 4. Synchronous switching test circuit (device type 08) - Continued.

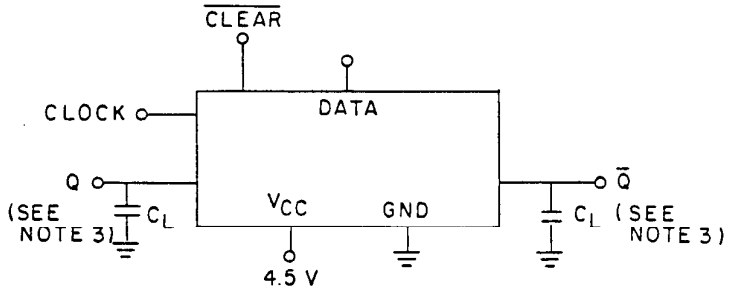

TEST CIRCUIT

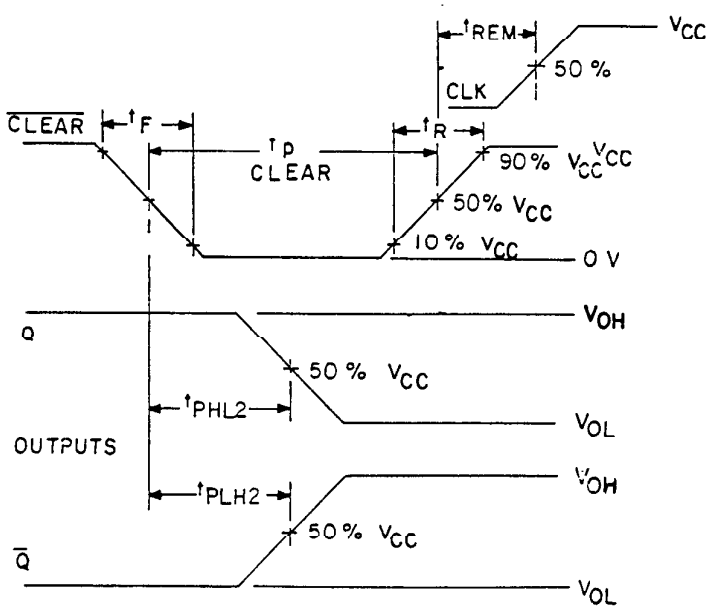

VOLTAGE WAVEFORMS

NOTES:

1. $\overline{\text{Clear}}$ pulses are active high and dominates regardless of the state of the clock and data inputs.
2. $\overline{\text{Clear}}$ input pulse characteristics are as follows: $t_R = t_F \leq 6$ ns; t_p (clear) ≤ 24 ns; $t_{REM} \leq 30$ ns.
3. $C_L = 50$ pF ±10 percent (including probe and jig capacitance).
4. Clock pulse prior to test with inputs biased to place output at the appropriate level for test.
5. Voltage measurements are to be made with respect to network ground terminal.

FIGURE 4. $\overline{\text{Clear}}$ switching test circuit (device type 07) - Continued.

TABLE III. Group A inspection for device type 01.

Symbol	MIL-STD-883 method	Case 2 Cases C,D Test no.	Terminal conditions 1/ 2 / 1 1CLK	3 / 2 1$\overline{CLR}$	4 / 3 1K	6 / 4 V_{CC}	8 / 5 2CLK	9 / 6 2$\overline{CLR}$	10 / 7 2J	12 / 8 2$\overline{Q}$	13 / 9 2Q	14 / 10 2K	16 / 11 GND	18 / 12 1Q	19 / 13 1$\overline{Q}$	20 / 14 1J	Measured terminal	Test limits: Subgroup 1 T_C = +25°C Min	Subgroup 1 Max	Subgroup 2 T_C = +125°C Min	Subgroup 2 Max	Subgroup 3 T_C = -55°C Min	Subgroup 3 Max	Unit
V_{IC} (pos) 1/		1	1 mA			GND							1/				1CLK	1/	1.5					V
		2		1 mA		"							"				1$\overline{CLR}$	"	"					"
		3			1 mA	"							"				1K	"	"					"
		4				"	1 mA						"				2CLK	"	"					"
		5				"		1 mA					"				2$\overline{CLR}$	"	"					"
		6				"			1 mA				"				2J	"	"					"
		7				"						1 mA	"				2K	"	"					"
		8				"							"			1 mA	1J	"	"					"
V_{IC} (neg) 1/		9	-1 mA			1/							GND				1CLK		-1.5					"
		10		-1 mA		"							"				1$\overline{CLR}$		"					"
		11			-1 mA	"							"				1K		"					"
		12				"	-1 mA						"				2CLK		"					"
		13				"		-1 mA					"				2$\overline{CLR}$		"					"
		14				"			-1 mA				"				2J		"					"
		15				"						-1 nA	"				2K		"					"
		16				"							"			-1 mA	1J		"					"
I_{CC}	3005	17	6.0 V	GND	6.0 V	6.0 V	6.0 V	GND	6.0 V			6.0 V	"			6.0 V	V_{CC}		0.15		15			μA
		18	2/	6.0 V	GND	6.0 V	2/	6.0 V	6.0 V			GND	"			6.0 V	V_{CC}		0.15		15			μA
V_{OH3}	3006	19	1.2 V	1.2 V	1.2 V	6.0 V							"		-20 μA	1.2 V	1$\overline{Q}$	5.95		5.95		5.95		V
		20				"	1.2 V	1.2 V	1.2 V	-20 μA		1.2 V	"				2$\overline{Q}$	"		"		"		"
		21	2/	4.2 V	1.2 V	"							"	-20 μA		4.2 V	1Q	"		"		"		"
		22	2/	4.2 V	4.2 V	"							"		-20 μA	1.2 V	1$\overline{Q}$	"		"		"		"
		23				"	2/	4.2 V	4.2 V		-20 μA	1.2 V	"				2Q	"		"		"		"
		24				"	2/	4.2 V	1.2 V	-20 μA		4.2 V	"				2$\overline{Q}$	"		"		"		"
V_{OH5}	3006	25-30	Same terminal conditions as specified above for V_{OH3} except I_{OH} = -5.2 mA.															5.48		5.2		5.48		"
V_{OL3}	3007	31	1.2 V	1.2 V	1.2 V	6.0 V							GND	20 μA		1.2 V	1Q		0.05		0.05		0.05	"
		32				"	1.2 V	1.2 V	1.2 V		20 μA	1.2 V	"				2Q		"		"		"	"
		33	2/	4.2 V	1.2 V	"							"		20 μA	4.2 V	1$\overline{Q}$		"		"		"	"
		34	2/	4.2 V	4.2 V	"							"	20 μA		1.2 V	1Q		"		"		"	"
		35				"	2/	4.2 V	4.2 V	20 μA		1.2 V	"				2$\overline{Q}$		"		"		"	"
		36				"	2/	4.2 V	1.2 V		20 μA	4.2 V	"				2Q		"		"		"	"
V_{OL5}	3007	37-42	Same terminal conditions as specified above for V_{OL3} except I_{OL} = 5.2 mA.																0.26		0.4		0.26	"

See footnotes at end of table.

TABLE III. Group A inspection for device type 01 - Continued.

Symbol	MIL-STD-883 method	Case 2 / Cases C,D Test no.	Terminal conditions 1/ 2 / 1 1CLK	3 / 2 1$\overline{CLR}$	4 / 3 1K	6 / 4 V_{CC}	8 / 5 2CLK	9 / 6 2$\overline{CLR}$	10 / 7 2J	12 / 8 2$\overline{Q}$	13 / 9 2Q	14 / 10 2K	16 / 11 GND	18 / 12 1Q	19 / 13 1$\overline{Q}$	20 / 14 1J	Measured terminal	Test limits: Subgroup 1 T_C = +25°C Min	Subgroup 1 Max	Subgroup 2 T_C = +125°C Min	Subgroup 2 Max	Subgroup 3 T_C = -55°C Min	Subgroup 3 Max	Unit
I_{OSL}	3011	43	3/	4.0 V	GND	4.0 V							GND	GND		4.0 V	1Q	-10	-120	-10	-120	-10	-120	mA
		44	3/	4.0 V	4.0 V	4.0 V							"		GND	GND	1$\overline{Q}$	"	"	"	"	"	"	"
		45					3/	4.0 V	4.0 V		GND	GND	"				2Q	"	"	"	"	"	"	"
		46					3/	4.0 V	GND	GND		4.0 V	"				2$\overline{Q}$	"	"	"	"	"	"	"
I_{IH}	3010	47	6.0 V			6.0 V							"				1CLK		.05		0.1			µA
		48		6.0 V		"							"				1$\overline{CLR}$		"		"			"
		49			6.0 V	"							"				1K		"		"			"
		50				"	6.0 V						"				2CLK		"		"			"
		51				"		6.0 V					"				2$\overline{CLR}$		"		"			"
		52				"			6.0 V				"				2J		"		"			"
		53				"						6.0 V	"				2K		"		"			"
		54				"							"			6.0 V	1J		"		"			"
I_{IL}	3009	55	GND			"							"				1CLK		-.05		-0.1			"
		56		GND		"							"				1$\overline{CLR}$		"		"			"
		57			GND	"							"				1K		"		"			"
		58				"	GND						"				2CLK		"		"			"
		59				"		GND					"				2$\overline{CLR}$		"		"			"
		60				"			GND				"				2J		"		"			"
		61				"						GND	"				2K		"		"			"
		62				"							"			GND	1J		"		"			"
																		Subgroup 4 T_C = +25°C						
C_I	3012	63	4/			GND							GND				1CLK		10					pF
		64		4/		"							"				1$\overline{CLR}$		"					"
		65			4/	"							"				1K		"					"
		66				"	4/						"				2CLK		"					"
		67				"		4/					"				2$\overline{CLR}$		"					"
		68				"			4/				"				2J		"					"
		69				"						4/	"				2K		"					"
		70				"							"			4/	1J		"					"
																		Subgroup 7 T_C = +25°C		Subgroup 8 T_C = +125°C		Subgroup 8 T_C = -55°C		
Truth table tests 6/ 7/	3014	71	A	B	B	4.5 V	A	B	A	H	L	B	GND	L	H	A	All outputs	5/	5/	5/	5/	5/	5/	
		72	B	B	B	"	B	B	A	H	L	B	"	L	H	A	"	"	"	"	"	"	"	
		73	A	B	B	"	A	B	A	H	L	B	"	L	H	A	"	"	"	"	"	"	"	
		74	A	A	B	"	A	A	A	H	L	B	"	L	H	A	"	"	"	"	"	"	"	
		75	A	A	B	"	A	A	B	H	L	B	"	L	H	B	"	"	"	"	"	"	"	
		76	B	A	B	"	B	A	B	H	L	B	"	L	H	B	"	"	"	"	"	"	"	
		77	A	A	B	"	A	A	B	H	L	B	"	L	H	B	"	"	"	"	"	"	"	
		78	A	A	B	"	A	A	A	H	L	B	"	L	H	A	"	"	"	"	"	"	"	
		79	B	A	B	"	B	A	A	L	H	B	"	H	L	A	"	"	"	"	"	"	"	
		80	A	A	B	"	A	A	A	L	H	B	"	H	L	A	"	"	"	"	"	"	"	
		81	A	A	A	"	A	A	A	L	H	A	"	H	L	A	"	"	"	"	"	"	"	
		82	A	A	A	"	A	A	B	L	H	A	"	H	L	B	"	"	"	"	"	"	"	
		83	B	A	A	"	B	A	B	H	L	A	"	L	H	B	"	"	"	"	"	"	"	
		84	A	A	A	"	A	A	B	H	L	A	"	L	H	B	"	"	"	"	"	"	"	
		85	A	A	A	"	A	A	A	H	L	A	"	L	H	A	"	"	"	"	"	"	"	
		86	B	A	A	"	B	A	A	L	H	A	"	H	L	A	"	"	"	"	"	"	"	
		87	A	A	A	"	A	A	A	L	H	A	"	H	L	A	"	"	"	"	"	"	"	
		88	B	A	A	"	B	A	A	H	L	A	"	L	H	A	"	"	"	"	"	"	"	
		89	A	A	A	"	A	A	A	H	L	A	"	L	H	A	"	"	"	"	"	"	"	

See footnotes at end of table.

TABLE III. Group A inspection for device type 01 - Continued.

Symbol	MIL-STD-883 method	Case 2 / Cases C,D	Terminal conditions 1/														Measured terminal	Test limits 3/						Unit
			2	3	4	6	8	9	10	12	13	14	16	18	19	20		Subgroup 9 T_C = +25°C		Subgroup 10 T_C = +125°C		Subgroup 11 T_C = -55°C		
			1	2	3	4	5	6	7	8	9	10	11	12	13	14								
		Test no.	1CLK	$\overline{1CLR}$	1K	V_{CC}	2CLK	$\overline{2CLR}$	2J	$2\overline{Q}$	2Q	2K	GND	1Q	$1\overline{Q}$	1J		Min	Max	Min	Max	Min	Max	
f_{MAX} 7/ 9/	(Fig. 4)	90	IN	4.5 V	4.5 V	4.5 V							GND	OUT		4.5 V	1Q	31		23		31		MHz
		91	IN	4.5 V	4.5 V	"							"		OUT	4.5 V	$1\overline{Q}$	"		"		"		"
		92				"	IN	4.5 V	4.5 V	OUT		4.5 V	"				$2\overline{Q}$	"		"		"		"
		93				"	IN	4.5 V	4.5 V		OUT	4.5 V	"				2Q	"		"		"		"
t_{PHL1} 7/	3003 (Fig. 4)	94	IN	4.5 V	GND	"							"		OUT	IN	1CLK to $1\overline{Q}$	5	30	5	40	5	30	ns
		95	IN	4.5 V	IN	"							"	OUT		GND	1CLK to 1Q	"	"	"	"	"	"	"
		96				"	IN	4.5 V	IN	OUT		GND	"				2CLK to $2\overline{Q}$	"	"	"	"	"	"	"
		97				"	IN	4.5 V	GND		OUT	IN	"				2CLK to 2Q	"	"	"	"	"	"	"
t_{PLH1} 7/	3003 (Fig. 4)	98	IN	4.5 V	4.5 V	"							"		OUT	IN	1CLK to $1\overline{Q}$	"	"	"	"	"	"	"
		99	IN	4.5 V	IN	"							"	OUT		4.5 V	1CLK to 1Q	"	"	"	"	"	"	"
		100				"	IN	4.5 V	IN	OUT		4.5 V	"				2CLK to $2\overline{Q}$	"	"	"	"	"	"	"
		101				"	IN	4.5 V	4.5 V		OUT	IN	"				2CLK to 2Q	"	"	"	"	"	"	"
t_{PHL2} 7/	3003 (Fig. 4)	102	10/	IN	GND	"							"	OUT		4.5 V	$1\overline{CLR}$ to 1Q	6	32	6	43	6	32	"
		103				"	10/	IN	4.5 V		OUT	GND	"				$2\overline{CLR}$ to 2Q	"	"	"	"	"	"	"
t_{PLH2} 7/	3003 (Fig. 4)	104	10/	IN	GND	"							"		OUT	4.5 V	$1\overline{CLR}$ to $1\overline{Q}$	"	"	"	"	"	"	"
		105				"	10/	IN	4.5 V	OUT		GND	"				$2\overline{CLR}$ to $2\overline{Q}$	"	"	"	"	"	"	"
t_{THL} 7/	3004 (Fig. 4)	106	IN	4.5 V	4.5 V	"							"		OUT	GND	$1\overline{Q}$	3	15	3	20	3	15	"
		107	IN	4.5 V	GND	"							"	OUT		4.5 V	1Q	"	"	"	"	"	"	"
		108				"	IN	4.5 V	4.5 V	OUT		GND	"				2Q	"	"	"	"	"	"	"
		109				"	IN	4.5 V	GND		OUT	4.5 V	"				$2\overline{Q}$	"	"	"	"	"	"	"
t_{TLH} 7/	3004 (Fig. 4)	110	IN	4.5 V	4.5 V	"							"		OUT	GND	$1\overline{Q}$	"	"	"	"	"	"	"
		111	IN	4.5 V	GND	"							"	OUT		4.5 V	1Q	"	"	"	"	"	"	"
		112				"	IN	4.5 V	GND	OUT		4.5 V	"				2Q	"	"	"	"	"	"	"
		113				"	IN	4.5 V	4.5 V		OUT	GND	"				$2\overline{Q}$	"	"	"	"	"	"	"

See footnotes at end of table.

TABLE III. Group A inspection for device type 02.

Symbol	MIL-STD-883 method	Case 2 Cases C,D Test no.	Terminal conditions 1/ 2 $\overline{1CLR}$	3 1D	4 1CLK	6 $\overline{1PRE}$	8 1Q	9 $\overline{1Q}$	10 GND	12 $\overline{2Q}$	13 2Q	14 $\overline{2PRE}$	16 2CLK	18 2D	19 $\overline{2CLR}$	20 V_{CC}	Measured terminal	Test limits Subgroup 1 T_C = +25°C Min	Subgroup 1 Max	Subgroup 2 T_C = +125°C Min	Subgroup 2 Max	Subgroup 3 T_C = -55°C Min	Subgroup 3 Max	Unit
V_{IC} (pos) 1/		1	1 mA						1/							GND	$1\overline{CLR}$	1/	1.5					V
		2		1 mA					"							"	1D	"	"					"
		3			1 mA				"							"	1CLK	"	"					"
		4				1 mA			"							"	$1\overline{PRE}$	"	"					"
		5							"			1 mA				"	$2\overline{PRE}$	"	"					"
		6							"				1 mA			"	2CLK	"	"					"
		7							"					1 mA		"	2D	"	"					"
		8							"						1 mA	"	$2\overline{CLR}$	"	"					"
V_{IC} (neg) 1/		9	-1 mA						GND							1/	$1\overline{CLR}$		-1.5					"
		10		-1 mA					"							"	1D		"					"
		11			-1 mA				"							"	1CLK		"					"
		12				-1 mA			"							"	$1\overline{PRE}$		"					"
		13							"			-1 mA				"	$2\overline{PRE}$		"					"
		14							"				-1 mA			"	2CLK		"					"
		15							"					-1 mA		"	2D		"					"
		16							"						-1 mA	"	$2\overline{CLR}$		"					"
I_{CC}	3005	17	6.0 V	GND	GND	GND			"			GND	GND	GND	6.0 V	6.0 V	V_{CC}		0.15		15			μA
		18	GND	GND	GND	6.0 V			"			6.0 V	GND	GND	GND	"	V_{CC}		0.15		15			μA
V_{OH3}	3006	19	4.2 V	1.2 V	1.2 V	1.2 V	-20 μA		"							"	1Q	5.95		5.95		5.95		V
		20	1.2 V	1.2 V	1.2 V	4.2 V		-20 μA	"							"	$1\overline{Q}$	"		"		"		"
		21							"	-20 μA		4.2 V	1.2 V	1.2 V	1.2 V	"	$2\overline{Q}$	"		"		"		"
		22							"		-20 μA	1.2 V	1.2 V	1.2 V	4.2 V	"	2Q	"		"		"		"
		23	4.2 V	4.2 V	2/	4.2 V	-20 μA		"							"	1Q	"		"		"		"
		24	4.2 V	1.2 V	2/	4.2 V		-20 μA	"							"	$1\overline{Q}$	"		"		"		"
		25							"	-20 μA		4.2 V	2/	1.2 V	4.2 V	"	$2\overline{Q}$	"		"		"		"
		26							"		-20 μA	4.2 V	2/	4.2 V	4.2 V	"	2Q	"		"		"		"
V_{OH5}	3006	27-34	Same terminal conditions as specified above for V_{OH3} except I_{OH} = -5.2 mA.															5.48		5.2		5.48		"
V_{OL3}	3007	35	4.2 V	1.2 V	1.2 V	1.2 V		20 μA	GND							6.0 V	$1\overline{Q}$		0.05		0.05		0.05	"
		36	1.2 V	1.2 V	1.2 V	4.2 V	20 μA		"							"	1Q		"		"		"	"
		37							"		20 μA	4.2 V	1.2 V	1.2 V	1.2 V	"	$2\overline{Q}$		"		"		"	"
		38							"	20 μA		1.2 V	1.2 V	1.2 V	4.2 V	"	2Q		"		"		"	"
		39	4.2 V	4.2 V	2/	4.2 V		20 μA	"							"	$1\overline{Q}$		"		"		"	"
		40	4.2 V	1.2 V	2/	4.2 V	20 μA		"							"	1Q		"		"		"	"
		41							"		20 μA	4.2 V	2/	1.2 V	4.2 V	"	$2\overline{Q}$		"		"		"	"
		42							"	20 μA		4.2 V	2/	4.2 V	4.2 V	"	2Q		"		"		"	"

See footnotes at end of table.

TABLE III. Group A inspection for device type 02 - Continued.

Symbol	MIL-STD-883 method	Case 2 / Cases C,D / Test no.	Terminal conditions 1/ 2 / 1 / ICLR	3 / 2 / 1D	4 / 3 / 1CLK	6 / 4 / 1PRE	8 / 5 / 1Q	9 / 6 / 1Q̄	10 / 7 / GND	12 / 8 / 2Q̄	13 / 9 / 2Q	14 / 10 / 2PRE	16 / 11 / 2CLK	18 / 12 / 2D	19 / 13 / 2CLR	20 / 14 / V_{CC}	Measured terminal	Test limits: Subgroup 1 T_C = +25°C Min	Subgroup 1 Max	Subgroup 2 T_C = +125°C Min	Subgroup 2 Max	Subgroup 3 T_C = -55°C Min	Subgroup 3 Max	Unit
V_{OL5}	3007	43-50	Same terminal conditions as specified above for V_{OL3} except I_{OL} = 5.2 mA.																0.26		0.4		0.26	V
I_{OS4}	3011	51	4.0 V	GND	GND	GND	GND		GND	GND						4.0 V	1Q	-10	-120	-10	-120	-10	-120	mA
		52	GND	GND	GND	4.0 V		GND	"							"	1Q̄	"	"	"	"	"	"	"
		53							"	GND		4.0 V	GND	GND	GND	"	2Q̄	"	"	"	"	"	"	"
		54							"		GND	GND	GND	GND	4.0 V	"	2Q	"	"	"	"	"	"	"
I_{IH}	3010	55	6.0 V						"							6.0 V	1CLR		.05		0.1			μA
		56		6.0 V					"							"	1D		"		"			"
		57			6.0 V				"							"	1CLK		"		"			"
		58				6.0 V			"							"	1PRE		"		"			"
		59							"			6.0 V				"	2PRE		"		"			"
		60							"				6.0 V			"	2CLK		"		"			"
		61							"					6.0 V		"	2D		"		"			"
		62							"						6.0 V	"	2CLR		"		"			"
I_{IL}	3009	63	GND						"							"	1CLR		-.05		-0.1			"
		64		GND					"							"	1D		"		"			"
		65			GND				"							"	1CLK		"		"			"
		66				GND			"							"	1PRE		"		"			"
		67							"			GND				"	2PRE		"		"			"
		68							"				GND			"	2CLK		"		"			"
		69							"					GND		"	2D		"		"			"
		70							"						GND	"	2CLR		"		"			"
																		Subgroup 4 T_C = +25°C						
C_I	3012	71	4/						GND							GND	1CLR		10					pF
		72		4/					"							"	1D		"					"
		73			4/				"							"	1CLK		"					"
		74				4/			"							"	1PRE		"					"
		75							"			4/				"	2PRE		"					"
		76							"				4/			"	2CLK		"					"
		77							"					4/		"	2D		"					"
		78							"						4/	"	2CLR		"					"
																		Subgroup 7 T_C = +25°C		Subgroup 8 T_C = +125°C		Subgroup 8 T_C = -55°C		
Truth table tests 6/ 7/	3014	79	B	A	B	A	L	H	GND	H	L	A	B	A	B	4.5 V	All outputs	5/	5/	5/	5/	5/	5/	
		80	B	A	A	A	L	H	"	H	L	A	A	A	B	"	"	"	"	"	"	"	"	
		81	B	A	B	A	L	H	"	H	L	A	B	A	B	"	"	"	"	"	"	"	"	
		82	A	A	B	A	L	H	"	H	L	A	B	A	A	"	"	"	"	"	"	"	"	
		83	A	A	B	B	H	L	"	L	H	B	B	A	A	"	"	"	"	"	"	"	"	
		84	A	B	B	B	H	L	"	L	H	B	B	B	A	"	"	"	"	"	"	"	"	
		85	A	B	A	B	H	L	"	L	H	B	A	B	A	"	"	"	"	"	"	"	"	
		86	A	B	B	B	H	L	"	L	H	B	B	B	A	"	"	"	"	"	"	"	"	
		87	A	B	B	A	H	L	"	L	H	A	B	B	A	"	"	"	"	"	"	"	"	
		88	A	B	A	A	L	H	"	H	L	A	A	B	A	"	"	"	"	"	"	"	"	
		89	A	B	B	A	L	H	"	H	L	A	B	B	A	"	"	"	"	"	"	"	"	
		90	A	A	B	A	L	H	"	H	L	A	B	A	A	"	"	"	"	"	"	"	"	
		91	A	A	A	A	H	L	"	L	H	A	A	A	A	"	"	"	"	"	"	"	"	

See footnotes at end of table.

TABLE III. Group A inspection for device type 02 - Continued.

Symbol	MIL-STD-883 method	Case 2 Cases C,D Test no.	Terminal conditions 1/ 2 / 1 / $\overline{1CLR}$	3 / 2 / 1D	4 / 3 / 1CLK	6 / 4 / $\overline{1PRE}$	8 / 5 / 1Q	9 / 6 / $1\overline{Q}$	10 / 7 / GND	12 / 8 / $2\overline{Q}$	13 / 9 / 2Q	14 / 10 / $2\overline{PRE}$	16 / 11 / 2CLK	18 / 12 / 2D	19 / 13 / $2\overline{CLR}$	20 / 14 / V_{CC}	Measured terminal	Test limits 8/ Subgroup 9 T_C = +25°C Min	Subgroup 9 Max	Subgroup 10 T_C = +125°C Min	Subgroup 10 Max	Subgroup 11 T_C = -55°C Min	Subgroup 11 Max	Unit
f_{MAX} 7/ 9/	(Fig. 4)	92	4.5 V	IN	IN	4.5 V	OUT		GND							4.5 V	1Q	28		21		28		MHz
		93	4.5 V	IN	IN	4.5 V		OUT	"							"	$1\overline{Q}$	"		"		"		"
		94							"	OUT		4.5 V	IN	IN	4.5 V	"	$2\overline{Q}$	"		"		"		"
		95							"		OUT	4.5 V	IN	IN	4.5 V	"	2Q	"		"		"		"
t_{PHL1} 7/	3003 (Fig. 4)	96	4.5 V	IN	IN	4.5 V	OUT		"							"	1CLK to 1Q	5	31	5	41	5	31	ns
		97							"		OUT	4.5 V	IN	IN	4.5 V	"	2CLK to 2Q	"	"	"	"	"	"	"
		98	4.5 V	IN	IN	4.5 V		OUT	"							"	1CLK to $1\overline{Q}$	"	"	"	"	"	"	"
		99							"	OUT		4.5 V	IN	IN	4.5 V	"	2CLK to $2\overline{Q}$	"	"	"	"	"	"	"
t_{PLH1} 7/	3003 (Fig. 4)	100	4.5 V	IN	IN	4.5 V	OUT		"							"	1CLK to 1Q	"	"	"	"	"	"	"
		101							"		OUT	4.5 V	IN	IN	4.5 V	"	2CLK to 2Q	"	"	"	"	"	"	"
		102	4.5 V	IN	IN	4.5 V		OUT	"							"	1CLK to $1\overline{Q}$	"	"	"	"	"	"	"
		103							"	OUT		4.5 V	IN	IN	4.5 V	"	2CLK to $2\overline{Q}$	"	"	"	"	"	"	"
t_{PHL2} 7/	3003 (Fig. 4)	104	IN	GND	GND	4.5 V	OUT		"							"	$1\overline{CLR}$ to 1Q	"	41	"	54	"	41	"
		105	4.5 V	GND	GND	IN		OUT	"							"	$1\overline{PRE}$ to $1\overline{Q}$	"	"	"	"	"	"	"
		106							"		OUT	4.5 V	GND	GND	IN	"	$2\overline{CLR}$ to 2Q	"	"	"	"	"	"	"
		107							"	OUT		IN	GND	GND	4.5 V	"	$2\overline{CLR}$ to $2\overline{Q}$	"	"	"	"	"	"	"
t_{PLH2} 7/	3003 (Fig. 4)	108	IN	GND	GND	4.5 V		OUT	"							"	$1\overline{CLR}$ to $1\overline{Q}$	"	"	"	"	"	"	"
		109	4.5 V	GND	GND	IN	OUT		"							"	$1\overline{PRE}$ to 1Q	"	"	"	"	"	"	"
		110							"	OUT		4.5 V	GND	GND	IN	"	$2\overline{CLR}$ to $2\overline{Q}$	"	"	"	"	"	"	"
		111							"		OUT	IN	GND	GND	4.5 V	"	$2\overline{CLR}$ to 2Q	"	"	"	"	"	"	"
t_{THL} 7/	3004 (Fig. 4)	112	4.5 V	IN	IN	4.5 V	OUT		"							"	1Q	3	15	3	20	3	15	"
		113							"		OUT	4.5 V	IN	IN	4.5 V	"	2Q	"	"	"	"	"	"	"
		114	4.5 V	IN	IN	4.5 V		OUT	"							"	$1\overline{Q}$	"	"	"	"	"	"	"
		115							"	OUT		4.5 V	IN	IN	4.5 V	"	$2\overline{Q}$	"	"	"	"	"	"	"
t_{TLH} 7/	3004 (Fig. 4)	116	4.5 V	IN	IN	4.5 V	OUT		"							"	1Q	"	"	"	"	"	"	"
		117							"		OUT	4.5 V	IN	IN	4.5 V	"	2Q	"	"	"	"	"	"	"
		118	4.5 V	IN	IN	4.5 V		OUT	"							"	$1\overline{Q}$	"	"	"	"	"	"	"
		119							"	OUT		4.5 V	IN	IN	4.5 V	"	$2\overline{Q}$	"	"	"	"	"	"	"

See footnotes at end of table.

TABLE III. Group A inspection for device type 03.

Symbol	MIL-STD-883 method	Case C	Cases C D	Test no.	Terminal conditions 1/ 2	3	4	6	8	9	10	12	13	14	16	18	19	20	Measured terminal	Test limits Subgroup 1 T_C = +25°C Min	Max	Subgroup 2 T_C = +125°C Min	Max	Subgroup 3 T_C = -55°C Min	Max	Unit
					1	2	3	4	5	6	7	8	9	10	11	12	13	14								
					1J	1$\overline{Q}$	1Q	1K	2Q	2$\overline{Q}$	GND	2J	2CLK	2$\overline{CLR}$	2K	1CLK	1$\overline{CLR}$	V_{CC}								
V_{IC} (pos) 1/				1	1 mA						1/							GND	1J	1/	1.5					V
				2				1 mA			"							"	1K	"	"					"
				3							"	1 mA						"	2J	"	"					"
				4							"		1 mA					"	2CLK	"	"					"
				5							"			1 mA				"	2$\overline{CLR}$	"	"					"
				6							"				1 mA			"	2K	"	"					"
				7							"					1 mA		"	1CLK	"	"					"
				8							"						1 mA	"	1$\overline{CLR}$	"	"					"
V_{IC} (neg) 1/				9	-1 mA						GND							1/	1J		-1.5					"
				10				-1 mA			"							"	1K		"					"
				11							"	-1 mA						"	2J		"					"
				12							"		-1 mA					"	2CLK		"					"
				13							"			-1 mA				"	2$\overline{CLR}$		"					"
				14							"				-1 mA			"	2K		"					"
				15							"					-1 mA		"	1CLK		"					"
				16							"						-1 mA	"	1$\overline{CLR}$		"					"
I_{CC}	3005			17	6.0 V			6.0 V			"	6.0 V	6.0 V	GND	6.0 V	6.0 V	GND	6.0 V	V_{CC}		0.15		15			μA
				18	6.0 V			GND			"	6.0 V	2/	6.0 V	GND	2/	6.0 V	"	V_{CC}		0.15		15			μA
V_{OH3}	3006			19	1.2 V	-20 μA		1.2 V			"					1.2 V	1.2 V	"	1$\overline{Q}$	5.95		5.95		5.95		V
				20						-20 μA	"	1.2 V	1.2 V	1.2 V	1.2 V			"	2$\overline{Q}$	"		"		"		"
				21	4.2 V		-20 μA	1.2 V			"					2/	4.2 V	"	1Q	"		"		"		"
				22	1.2 V	-20 μA		4.2 V			"					2/	4.2 V	"	1$\overline{Q}$	"		"		"		"
				23					-20 μA		"	4.2 V	2/	4.2 V	1.2 V			"	2Q	"		"		"		"
				24						-20 μA	"	1.2 V	2/	4.2 V	4.2 V			"	2$\overline{Q}$	"		"		"		"
V_{OH5}	3006			25-30	Same terminal conditions as specified above for V_{OH3} except I_{OH} = -5.2 mA.															5.48		5.2		5.48		"
V_{OL3}	3007			31	1.2 V		20 μA	1.2 V			GND					1.2 V	1.2 V	6.0 V	1Q		0.05		0.05		0.05	"
				32					20 μA		"	1.2 V	1.2 V	1.2 V	1.2 V			"	2Q		"		"		"	"
				33	4.2 V	20 μA		1.2 V			"					2/	4.2 V	"	1$\overline{Q}$		"		"		"	"
				34	1.2 V		20 μA	4.2 V			"					2/	4.2 V	"	1Q		"		"		"	"
				35						20 μA	"	4.2 V	2/	4.2 V	1.2 V			"	2$\overline{Q}$		"		"		"	"
				36					20 μA		"	1.2 V	2/	4.2 V	4.2 V			"	2Q		"		"		"	"
V_{OL5}	3007			37-42	Same terminal conditions as specified above for V_{OL3} except I_{OL} = 5.2 mA.																0.26		0.4		0.26	"

See footnotes at end of table.

TABLE III. Group A inspection for device type 03 - Continued.

Symbol	MIL-STD-883 method	Case 2 / Cases C,D / Test no.	Terminal conditions 1/ 2 / 1 / 1J	3 / 2 / 1$\overline{Q}$	4 / 3 / 1Q	6 / 4 / 1K	8 / 5 / 2Q	9 / 6 / 2$\overline{Q}$	10 / 7 / GND	12 / 8 / 2J	13 / 9 / 2CLK	14 / 10 / 2$\overline{CLR}$	16 / 11 / 2K	18 / 12 / 1CLK	19 / 13 / 1$\overline{CLR}$	20 / 14 / V_{CC}	Measured terminal	Test limits: Subgroup 1 T_C = +25°C Min	Subgroup 1 Max	Subgroup 2 T_C = +125°C Min	Subgroup 2 Max	Subgroup 3 T_C = -55°C Min	Subgroup 3 Max	Unit
I_{OS4}	3011	43	4.0 V	GND	GND	GND			GND					1/	4.0 V	4.0 V	1Q	-10	-120	-10	-120	-10	-120	mA
		44	GND			4.0 V			"					1/	4.0 V	"	1$\overline{Q}$	"	"	"	"	"	"	"
		45					GND		"	4.0 V	1/	4.0 V	GND			"	2Q	"	"	"	"	"	"	"
		46						GND	"	GND	1/	4.0 V	4.0 V			"	2$\overline{Q}$	"	"	"	"	"	"	"
I_{IH}	3010	47	6.0 V						"							6.0 V	1J		.05		0.1			μA
		48				6.0 V			"							"	1K		"		"			"
		49							"	6.0 V						"	2J		"		"			"
		50							"		6.0 V					"	2CLK		"		"			"
		51							"			6.0 V				"	2$\overline{CLR}$		"		"			"
		52							"				6.0 V			"	2K		"		"			"
		53							"					6.0 V		"	1CLK		"		"			"
		54							"						6.0 V	"	1$\overline{CLR}$		"		"			"
I_{IL}	3009	55	GND						"							"	1J		-.05		-0.1			"
		56				GND			"							"	1K		"		"			"
		57							"	GND						"	2J		"		"			"
		58							"		GND					"	2CLK		"		"			"
		59							"			GND				"	2$\overline{CLR}$		"		"			"
		60							"				GND			"	2K		"		"			"
		61							"					GND		"	1CLK		"		"			"
		62							"						GND	"	1$\overline{CLR}$		"		"			"
																		Subgroup 4 T_C = +25°C						
C_I	3012	63	4/						GND							6.0 V	1J		10					pF
		64				4/			"							"	1K		"					"
		65							"	4/						"	2J		"					"
		66							"		4/					"	2CLK		"					"
		67							"			4/				"	2$\overline{CLR}$		"					"
		68							"				4/			"	2K		"					"
		69							"					4/		"	1CLK		"					"
		70							"						4/	"	1$\overline{CLR}$		"					"
																		Subgroup 7 T_C = +25°C		Subgroup 8 T_C = +125°C		Subgroup 8 T_C = -55°C		
Truth table tests 6/ 7/	3014	71	A	H	L	B	L	H	GND	A	A	B	B	A	B	4.5 V	All outputs	5/	5/	5/	5/	5/	5/	
		72	A	H	L	B	L	H	"	A	B	B	B	B	B	"	"	"	"	"	"	"	"	
		73	A	H	L	B	L	H	"	A	A	B	B	A	B	"	"	"	"	"	"	"	"	
		74	A	H	L	B	L	H	"	A	A	A	B	A	A	"	"	"	"	"	"	"	"	
		75	B	H	L	B	L	H	"	B	A	A	B	A	A	"	"	"	"	"	"	"	"	
		76	B	H	L	B	L	H	"	B	B	A	B	B	A	"	"	"	"	"	"	"	"	
		77	B	H	L	B	L	H	"	B	A	A	B	A	A	"	"	"	"	"	"	"	"	
		78	A	H	L	B	L	H	"	A	A	A	B	A	A	"	"	"	"	"	"	"	"	
		79	A	L	H	B	H	L	"	A	B	A	B	B	A	"	"	"	"	"	"	"	"	
		80	A	L	H	B	H	L	"	A	A	A	B	A	A	"	"	"	"	"	"	"	"	
		81	A	L	H	A	H	L	"	A	A	A	A	A	A	"	"	"	"	"	"	"	"	
		82	B	L	H	A	H	L	"	B	A	A	A	A	A	"	"	"	"	"	"	"	"	
		83	B	H	L	A	L	H	"	B	B	A	A	B	A	"	"	"	"	"	"	"	"	
		84	B	H	L	A	L	H	"	B	A	A	A	A	A	"	"	"	"	"	"	"	"	
		85	A	H	L	A	L	H	"	A	A	A	A	A	A	"	"	"	"	"	"	"	"	
		86	A	L	H	A	H	L	"	A	B	A	A	B	A	"	"	"	"	"	"	"	"	
		87	A	L	H	A	H	L	"	A	A	A	A	A	A	"	"	"	"	"	"	"	"	
		88	A	H	L	A	L	H	"	A	B	A	A	B	A	"	"	"	"	"	"	"	"	
		89	A	H	L	A	L	H	"	A	A	A	A	A	A	"	"	"	"	"	"	"	"	

See footnotes at end of table.

TABLE III. Group A inspection for device type 03 - Continued.

Symbol	MIL-STD-883 method	Case 2 Cases C,D Test no.	Terminal conditions 1/ 2 1 1J	3 2 1$\overline{Q}$	4 3 1Q	6 4 1K	8 5 2Q	9 6 2$\overline{Q}$	10 7 GND	12 8 2J	13 9 2CLK	14 10 2$\overline{CLR}$	16 11 2K	18 12 1CLK	19 13 1$\overline{CLR}$	20 14 V_{CC}	Measured terminal	Test limits 8/ Subgroup 9 T_C = +25°C Min	Subgroup 9 Max	Subgroup 10 T_C = +125°C Min	Subgroup 10 Max	Subgroup 11 T_C = -55°C Min	Subgroup 11 Max	Unit
f_{MAX} 7/ 9/	(Fig. 4)	90	4.5 V	OUT		4.5 V			GND					IN	4.5 V	4.5 V	1$\overline{Q}$	31		23		31		MHz
		91	4.5 V		OUT	4.5 V			"					IN	4.5 V	"	1Q	"		"		"		"
		92					OUT		"	4.5 V	IN	4.5 V	4.5 V			"	2Q	"		"		"		"
		93						OUT	"	4.5 V	IN	4.5 V	4.5 V			"	2$\overline{Q}$	"		"		"		"
t_{PHL1} 7/	3003 (Fig. 4)	94	IN	OUT		GND			"					IN	4.5 V	"	1CLK to 1$\overline{Q}$	5	30	5	40	5	30	ns
		95	GND		OUT	IN			"					IN	4.5 V	"	1CLK to 1Q	"	"	"	"	"	"	"
		96					OUT		"	GND	IN	4.5 V	IN			"	2CLK to 2Q	"	"	"	"	"	"	"
		97						OUT	"	IN	IN	4.5 V	GND			"	2CLK to 2$\overline{Q}$	"	"	"	"	"	"	"
t_{PLH1} 7/	3003 (Fig. 4)	98	IN	OUT		4.5 V			"					IN	4.5 V	"	1CLK to 1$\overline{Q}$	"	"	"	"	"	"	"
		99	4.5 V		OUT	IN			"					IN	4.5 V	"	1CLK to 1Q	"	"	"	"	"	"	"
		100					OUT		"	4.5 V	IN	4.5 V	IN			"	2CLK to 2Q	"	"	"	"	"	"	"
		101						OUT	"	IN	IN	4.5 V	4.5 V			"	2CLK to 2$\overline{Q}$	"	"	"	"	"	"	"
t_{PHL2} 7/	3003 (Fig. 4)	102	4.5 V		OUT	GND			"					10/	IN	"	1$\overline{CLR}$ to 1Q	6	27	6	36	6	27	"
		103					OUT		"	4.5 V	10/	IN	GND			"	2$\overline{CLR}$ to 2Q	"	"	"	"	"	"	"
t_{PLH2} 7/	3003 (Fig. 4)	104	4.5 V	OUT		GND			"					10/	IN	"	1$\overline{CLR}$ to 1Q	"	"	"	"	"	"	"
		105						OUT	"	4.5 V	10/	IN	GND			"	2$\overline{CLR}$ to 2Q	"	"	"	"	"	"	"
t_{THL} 7/	3003 (Fig. 4)	106	4.5 V	OUT		GND			"					IN	4.5 V	"	1$\overline{Q}$	3	15	3	20	3	15	"
		107	GND		OUT	4.5 V			"					IN	4.5 V	"	1Q	"	"	"	"	"	"	"
		108					OUT		"	GND	IN	4.5 V	4.5 V			"	2Q	"	"	"	"	"	"	"
		109						OUT	"	4.5 V	IN	4.5 V	GND			"	2$\overline{Q}$	"	"	"	"	"	"	"
t_{TLH} 7/	3003 (Fig. 4)	110	GND	OUT		4.5 V			"					IN	4.5 V	"	1$\overline{Q}$	"	"	"	"	"	"	"
		111	4.5 V		OUT	GND			"					IN	4.5 V	"	1Q	"	"	"	"	"	"	"
		112					OUT		"	4.5 V	IN	4.5 V	GND			"	2Q	"	"	"	"	"	"	"
		113						OUT	"	GND	IN	4.5 V	4.5 V			"	2$\overline{Q}$	"	"	"	"	"	"	"

See footnotes at end of table.

TABLE III. Group A inspection for device type 04.

Symbol	MIL-STD-883 method	Case 2 / Cases E, F	Terminal conditions 1/																Measured terminal	Test limits						Unit
			2	3	4	5	7	8	9	10	12	13	14	15	17	18	19	20		Subgroup 1 T_C = +25°C		Subgroup 2 T_C = +125°C		Subgroup 3 T_C = -55°C		
			1	2	3	4	5	6	7	8	9	10	11	12	13	14	15	16								
		Test no.	1$\overline{CLR}$	1J	1$\overline{K}$	1CLK	1$\overline{PRE}$	1Q	1$\overline{Q}$	GND	2$\overline{Q}$	2Q	2$\overline{PRE}$	2CLK	2$\overline{K}$	2J	2$\overline{CLR}$	V_{CC}		Min	Max	Min	Max	Min	Max	
V_{IC} (pos) 1/		1	1 mA							1/								GND	1$\overline{CLR}$	1/	1.5					V
		2		1 mA						"								"	1J	"	"					"
		3			1 mA					"								"	1$\overline{K}$	"	"					"
		4				1 mA				"								"	1CLK	"	"					"
		5					1 mA			"								"	1$\overline{PRE}$	"	"					"
		6								"			1 mA					"	2$\overline{PRE}$	"	"					"
		7								"				1 mA				"	2CLK	"	"					"
		8								"					1 mA			"	2$\overline{K}$	"	"					"
		9								"						1 mA		"	2J	"	"					"
		10								"							1 mA	"	2$\overline{CLR}$	"	"					"
V_{IC} (neg) 1/		11	-1 mA							GND								1/	1$\overline{CLR}$		-1.5					"
		12		-1 mA						"								"	1J		"					"
		13			-1 mA					"								"	1$\overline{K}$		"					"
		14				-1 mA				"								"	1CLK		"					"
		15					-1 mA			"								"	1$\overline{PRE}$		"					"
		16								"			-1 mA					"	2$\overline{PRE}$		"					"
		17								"				-1 mA				"	2CLK		"					"
		18								"					-1 mA			"	2$\overline{K}$		"					"
		19								"						-1 mA		"	2J		"					"
		20								"							-1 mA	"	2$\overline{CLR}$		"					"
I_{CC}	3005	21	GND	6.0 V	6.0 V	GND	6.0 V			"			6.0 V	GND	6.0 V	6.0 V	GND	6.0 V	V_{CC}		0.15		15			µA
		22	6.0 V	6.0 V	6.0 V	GND	GND			"			GND	GND	6.0 V	6.0 V	6.0 V	"	V_{CC}		0.15		15			µA
V_{OH3}	3006	23	4.2 V	1.2 V	1.2 V	1.2 V	1.2 V	-20 µA		"								"	1Q	5.95		5.95		5.95		V
		24	1.2 V	4.2 V	4.2 V	1.2 V	4.2 V		-20 µA	"								"	1$\overline{Q}$	"		"		"		"
		25								"	-20 µA		4.2 V	1.2 V	4.2 V	4.2 V	1.2 V	"	2$\overline{Q}$	"		"		"		"
		26								"		-20 µA	1.2 V	1.2 V	1.2 V	1.2 V	4.2 V	"	2Q	"		"		"		"
		27	4.2 V	4.2 V	4.2 V	2/	4.2 V	-20 µA		"								"	1Q	"		"		"		"
		28	4.2 V	1.2 V	1.2 V	2/	4.2 V		-20 µA	"								"	1$\overline{Q}$	"		"		"		"
		29								"	-20 µA		4.2 V	2/	1.2 V	1.2 V	4.2 V	"	2$\overline{Q}$	"		"		"		"
		30								"		-20 µA	4.2 V	2/	4.2 V	4.2 V	4.2 V	"	2Q	"		"		"		"
V_{OH5}	3006	31	4.2 V	1.2 V	1.2 V	1.2 V	1.2 V	-5.2 mA		"								"	1Q	5.46		5.2		5.48		"
		32	1.2 V	4.2 V	4.2 V	1.2 V	4.2 V		-5.2 mA	"								"	1$\overline{Q}$	"		"		"		"
		33								"	-5.2 mA		4.2 V	1.2 V	4.2 V	4.2 V	1.2 V	"	2$\overline{Q}$	"		"		"		"
		34								"		-5.2 mA	1.2 V	1.2 V	1.2 V	1.2 V	4.2 V	"	2Q	"		"		"		"
		35	4.2 V	4.2 V	4.2 V	2/	4.2 V	-5.2 mA		"								"	1Q	"		"		"		"
		36	4.2 V	1.2 V	1.2 V	2/	4.2 V		-5.2 mA	"								"	1$\overline{Q}$	"		"		"		"
		37								"	-5.2 mA		4.2 V	2/	1.2 V	1.2 V	4.2 V	"	2$\overline{Q}$	"		"		"		"
		38								"		-5.2 mA	4.2 V	2/	4.2 V	4.2 V	4.2 V	"	2Q	"		"		"		"
V_{OL3}	3007	39	1.2 V	4.2 V	4.2 V	1.2 V	4.2 V	20 µA		"								"	1Q		0.05		0.05		0.05	"
		40	4.2 V	1.2 V	1.2 V	1.2 V	1.2 V		20 µA	"								"	1$\overline{Q}$		"		"		"	"
		41								"	20 µA		1.2 V	1.2 V	1.2 V	1.2 V	4.2 V	"	2$\overline{Q}$		"		"		"	"
		42								"		20 µA	4.2 V	1.2 V	4.2 V	4.2 V	1.2 V	"	2Q		"		"		"	"

TABLE III. Group A inspection for device type 04 - Continued.

Symbol	MIL-STD-883 method	Case 2 / Cases E, F	Terminal conditions 1/																Measured terminal	Test limits						Unit
			2	3	4	5	7	8	9	10	12	13	14	15	17	18	19	20		Subgroup 1 T_C = +25°C		Subgroup 2 T_C = +125°C		Subgroup 3 T_C = -55°C		
			1	2	3	4	5	6	7	8	9	10	11	12	13	14	15	16								
		Test no.	1$\overline{CLR}$	1J	1$\overline{K}$	1CLK	1$\overline{PRE}$	1Q	1$\overline{Q}$	GND	2$\overline{Q}$	2Q	2$\overline{PRE}$	2CLK	2$\overline{K}$	2J	2$\overline{CLR}$	V_{CC}		Min	Max	Min	Max	Min	Max	
V_{OL3}	3007	43	4.2 V	1.2 V	1.2 V	2/	4.2 V	20 µA		GND								6.0 V	1Q		0.05		0.05		0.05	V
		44	4.2 V	4.2 V	4.2 V	2/	4.2 V		20 µA	"								"	1$\overline{Q}$		"		"		"	"
		45								"	20 µA		4.2 V	2/	4.2 V	4.2 V	4.2 V	"	2$\overline{Q}$		"		"		"	"
		46								"		20 µA	4.2 V	2/	1.2 V	1.2 V	4.2 V	"	2Q		"		"		"	"
V_{OL5}	3007	47	1.2 V	4.2 V	4.2 V	1.2 V	4.2 V	5.2 mA		"								"	1Q		0.26		0.4		0.26	"
		48	4.2 V	1.2 V	1.2 V	1.2 V	1.2 V		5.2 mA	"								"	1$\overline{Q}$		"		"		"	"
		49								"	5.2 mA		1.2 V	1.2 V	1.2 V	1.2 V	4.2 V	"	2$\overline{Q}$		"		"		"	"
		50								"		5.2 mA	4.2 V	1.2 V	4.2 V	4.2 V	1.2 V	"	2Q		"		"		"	"
		51	4.2 V	1.2 V	1.2 V	2/	4.2 V	5.2 mA		"								"	1Q		"		"		"	"
		52	4.2 V	4.2 V	4.2 V	2/	4.2 V		5.2 mA	"								"	1$\overline{Q}$		"		"		"	"
		53								"	5.2 mA		4.2 V	2/	4.2 V	4.2 V	4.2 V	"	2$\overline{Q}$		"		"		"	"
		54								"		5.2 mA	4.2 V	2/	1.2 V	1.2 V	4.2 V	"	2Q		"		"		"	"
I_{OS4}	3011	55	4.0 V	GND	GND	GND	GND	GND		"								4.0 V	1Q	-10	-120	-10	-120	-10	-120	mA
		56	GND	GND	GND	GND	4.0 V		GND	"								"	1$\overline{Q}$	"	"	"	"	"	"	"
		57								"	GND		4.0 V	GND	GND	GND	GND	"	2$\overline{Q}$	"	"	"	"	"	"	"
		58								"		GND	GND	GND	GND	GND	4.0 V	"	2Q	"	"	"	"	"	"	"
I_{IH}	3010	59	6.0 V							"								6.0 V	1$\overline{CLR}$		50		100			nA
		60		6.0 V						"								"	1J		"		"			"
		61			6.0 V					"								"	1$\overline{K}$		"		"			"
		62				6.0 V				"								"	1CLK		"		"			"
		63					6.0 V			"								"	1$\overline{PRE}$		"		"			"
		64								"			6.0 V					"	2$\overline{PRE}$		"		"			"
		65								"				6.0 V				"	2CLK		"		"			"
		66								"					6.0 V			"	2$\overline{K}$		"		"			"
		67								"						6.0 V		"	2J		"		"			"
		68								"							6.0 V	"	2$\overline{CLR}$		"		"			"
I_{IL}	3009	69	GND							"								"	1$\overline{CLR}$		-50		-100			"
		70		GND						"								"	1J		"		"			"
		71			GND					"								"	1$\overline{K}$		"		"			"
		72				GND				"								"	1CLK		"		"			"
		73					GND			"								"	1$\overline{PRE}$		"		"			"
		74								"			GND					"	2$\overline{PRE}$		"		"			"
		75								"				GND				"	2CLK		"		"			"
		76								"					GND			"	2$\overline{K}$		"		"			"
		77								"						GND		"	2J		"		"			"
		78								"							GND	"	2$\overline{CLR}$		"		"			"
																				Subgroup 4 T_C = +25°C						
C_I	3012	79	4/							GND								GND	1$\overline{CLR}$		10					pF
		80		4/						"								"	1J		"					"
		81			4/					"								"	1$\overline{K}$		"					"
		82				4/				"								"	1CLK		"					"
		83					4/			"								"	1$\overline{PRE}$		"					"
		84								"			4/					"	2$\overline{PRE}$		"					"
		85								"				4/				"	2CLK		"					"
		86								"					4/			"	2$\overline{K}$		"					"
		87								"						4/		"	2J		"					"
		88								"							4/	"	2$\overline{CLR}$		"					"

See footnotes at end of table.

TABLE III. Group A inspection for device type 04 - Continued.

Symbol	MIL-STD 883 method	Case letter Cases E, F	Test no.	Terminal conditions 1/ 2 / 1 1CLR	3 / 2 1J	4 / 3 1K	5 / 4 1CLK	7 / 5 1PRE	8 / 6 1Q	9 / 7 1Q̄	10 / 8 GND	12 / 9 2Q̄	13 / 10 2Q	14 / 11 2PRE	15 / 12 2CLK	17 / 13 2K	18 / 14 2J	19 / 15 2CLR	20 / 16 V_{CC}	Measured terminal	Test limits: Subgroup 7 T_C = +25°C Min	Subgroup 7 Max	Subgroup 8 T_C = +125°C Min	Subgroup 8 Max	Subgroup 8 T_C = -55°C Min	Subgroup 8 Max	Unit
Truth table tests 6/ 7/	3014		89	B	A	A	B	A	L	H	GND	H	L	A	B	A	A	B	4.5 V	All outputs	5/	5/	5/	5/	5/	5/	
			90	B	A	A	A	A	L	H	"	H	L	A	A	A	A	B	"	"	"	"	"	"	"	"	
			91	B	A	A	B	A	L	H	"	H	L	A	B	A	A	B	"	"	"	"	"	"	"	"	
			92	A	A	A	B	A	L	H	"	H	L	A	B	A	A	A	"	"	"	"	"	"	"	"	
			93	A	A	A	B	B	H	L	"	L	H	B	B	A	A	A	"	"	"	"	"	"	"	"	
			94	A	B	A	B	B	H	L	"	L	H	B	B	A	B	A	"	"	"	"	"	"	"	"	
			95	A	B	B	B	B	H	L	"	L	H	B	B	B	B	A	"	"	"	"	"	"	"	"	
			96	A	B	B	A	B	H	L	"	L	H	B	A	B	B	A	"	"	"	"	"	"	"	"	
			97	A	B	B	B	B	H	L	"	L	H	B	B	B	B	A	"	"	"	"	"	"	"	"	
			98	A	B	B	B	A	H	L	"	L	H	A	B	B	B	A	"	"	"	"	"	"	"	"	
			99	A	B	B	A	A	L	H	"	H	L	A	A	B	B	A	"	"	"	"	"	"	"	"	
			100	A	B	B	B	A	L	H	"	H	L	A	B	B	B	A	"	"	"	"	"	"	"	"	
			101	A	B	A	B	A	L	H	"	H	L	A	B	A	B	A	"	"	"	"	"	"	"	"	
			102	A	B	A	A	A	L	H	"	H	L	A	A	A	B	A	"	"	"	"	"	"	"	"	
			103	A	B	A	B	A	L	H	"	H	L	A	B	A	B	A	"	"	"	"	"	"	"	"	
			104	A	A	A	B	A	L	H	"	H	L	A	B	A	A	A	"	"	"	"	"	"	"	"	
			105	A	A	A	A	A	H	L	"	L	H	A	A	A	A	A	"	"	"	"	"	"	"	"	
			106	A	A	A	B	A	H	L	"	L	H	A	B	A	A	A	"	"	"	"	"	"	"	"	
			107	A	A	B	B	A	H	L	"	L	H	A	B	B	A	A	"	"	"	"	"	"	"	"	
			108	A	A	B	A	A	L	H	"	H	L	A	A	B	A	A	"	"	"	"	"	"	"	"	
			109	A	A	B	B	A	L	H	"	H	L	A	B	B	A	A	"	"	"	"	"	"	"	"	
			110	A	A	B	A	A	H	L	"	L	H	A	A	B	A	A	"	"	"	"	"	"	"	"	
			111	A	A	B	B	A	H	L	"	L	H	A	B	B	A	A	"	"	"	"	"	"	"	"	
			112	B	A	B	B	A	L	H	"	H	L	A	B	B	A	B	"	"	"	"	"	"	"	"	

Symbol	MIL-STD 883 method	Case letter Cases E, F	Test no.	Measured terminal	Test limits 8/: Subgroup 9 T_C = +25°C	Subgroup 10 T_C = +125°C	Subgroup 11 T_C = -55°C	Unit
f_{MAX} 7/ 9/	(Fig. 4)	113		1Q	31	23	31	MHz
		114		1Q̄	"	"	"	"
		115		2Q̄	"	"	"	"
		116		2Q	"	"	"	"
t_{PHL1} 7/	3003 (Fig. 4)	117		1CLK to 1Q	5	5	5	ns
		118		1CLK to 1Q̄	"	"	"	"
		119		2CLK to 2Q̄	"	"	"	"
		120		2CLK to 2Q	"	"	"	"

See footnotes at end of table.

TABLE III. Group A inspection for device type 04 - Continued.

Symbol	MIL-STD-883 method	Case 2 Cases E, F	Terminal conditions 1/																Measured terminal	Test limits 8/						Unit
			2	3	4	5	7	8	9	10	12	13	14	15	17	18	19	20		Subgroup 9 T_C = +25°C		Subgroup 10 T_C = +125°C		Subgroup 11 T_C = -55°C		
			1	2	3	4	5	6	7	8	9	10	11	12	13	14	15	16								
		Test no.	1$\overline{CLR}$	1J	1$\overline{K}$	1CLK	1$\overline{PRE}$	1Q	1$\overline{Q}$	GND	2$\overline{Q}$	2Q	2$\overline{PRE}$	2CLK	2$\overline{K}$	2J	2$\overline{CLR}$	V_{CC}		Min	Max	Min	Max	Min	Max	
t_{PLH1} 7/	3003 (Fig. 4)	121	4.5 V	IN	4.5 V	IN	4.5 V	OUT		GND								4.5 V	1CLK to 1Q	5	31	5	41	5	31	ns
		122	4.5 V	GND	IN	IN	4.5 V		OLT	"								"	1CLK to 1$\overline{Q}$	"	"	"	"	"	"	"
		123								"	OUT		4.5 V	IN	GND	GND	4.5 V	"	2CLK to 2$\overline{Q}$	"	"	"	"	"	"	"
		124								"		CUT	4.5 V	IN	4.5 V	4.5 V	4.5 V	"	2CLK to 2Q	"	"	"	"	"	"	"
t_{PHL2} 7/	3003 (Fig. 4)	125	IN	4.5 V	GND	GND	4.5 V	OUT		"								"	1$\overline{CLR}$ to 1Q	6	41	6	54	6	41	"
		126	4.5 V	4.5 V	GND	GND	IN		OLT	"								"	1$\overline{PRE}$ to 1$\overline{Q}$	"	"	"	"	"	"	"
		127								"	OUT		IN	GND	GND	4.5 V	4.5 V	"	2$\overline{PRE}$ to 2$\overline{Q}$	"	"	"	"	"	"	"
		128								"		CUT	4.5 V	GND	GND	4.5 V	IN	"	2$\overline{CLR}$ to 2Q	"	"	"	"	"	"	"
t_{PLH2} 7/	3003 (Fig. 4)	129	4.5 V	4.5 V	GND	GND	IN	OUT		"								"	1$\overline{PRE}$ to 1Q	"	"	"	"	"	"	"
		130	IN	4.5 V	GND	GND	4.5 V		OLT	"								"	1$\overline{CLR}$ to 1$\overline{Q}$	"	"	"	"	"	"	"
		131								"	OUT		4.5 V	GND	GND	4.5 V	IN	"	2$\overline{CLR}$ to 2$\overline{Q}$	"	"	"	"	"	"	"
		132								"		CUT	IN	GND	GND	4.5 V	4.5 V	"	2$\overline{PRE}$ to 2Q	"	"	"	"	"	"	"
t_{THL} 7/	3004 (Fig. 4)	133	4.5 V	IN	GND	IN	4.5 V	OUT		"								"	1Q	3	15	3	20	3	15	"
		134	4.5 V	4.5 V	IN	IN	4.5 V		OUT	"								"	1$\overline{Q}$	"	"	"	"	"	"	"
		135								"	OUT		4.5 V	IN	4.5 V	IN	4.5 V	"	2$\overline{Q}$	"	"	"	"	"	"	"
		136								"		OUT	4.5 V	IN	IN	GND	4.5 V	"	2Q	"	"	"	"	"	"	"
t_{TLH} 7/	3004 (Fig. 4)	137	4.5 V	IN	4.5 V	IN	4.5 V	OUT		"								"	1Q	"	"	"	"	"	"	"
		138	4.5 V	GND	IN	IN	4.5 V		OUT	"								"	1$\overline{Q}$	"	"	"	"	"	"	"
		139								"	OUT		4.5 V	IN	GND	IN	4.5 V	"	2$\overline{Q}$	"	"	"	"	"	"	"
		140								"		OUT	4.5 V	IN	IN	4.5 V	4.5 V	"	2Q	"	"	"	"	"	"	"

See footnotes at end of table.

TABLE III Group A inspection for device type 05.

Symbol	MIL-STD-883 method	Case 2 / Cases E, F	Terminal conditions 1/																Measured terminal	Test limits: Subgroup 1 T_C = +25°C		Subgroup 2 T_C = +125°C		Subgroup 3 T_C = -55°C		Unit
			2	3	4	5	7	8	9	10	12	13	14	15	17	18	19	20								
			1	2	3	4	5	6	7	8	9	10	11	12	13	14	15	16								
		Test no.	1CLK	1K	1J	1$\overline{PRE}$	1Q	1$\overline{Q}$	2$\overline{Q}$	GND	2Q	2$\overline{PRE}$	2J	2K	2CLK	2$\overline{CLR}$	1$\overline{CLR}$	V_{CC}		Min	Max	Min	Max	Min	Max	
V_{IC} (pos) 1/		1	1 mA							1/								GND	1CLK	1/	1.5					V
		2		1 mA						"								"	1K	"	"					"
		3			1 mA					"								"	1J	"	"					"
		4				1 mA				"								"	1$\overline{PRE}$	"	"					"
		5								"		1 mA						"	2$\overline{PRE}$	"	"					"
		6								"			1 mA					"	2J	"	"					"
		7								"				1 mA				"	2K	"	"					"
		8								"					1 mA			"	2CLK	"	"					"
		9								"						1 mA		"	2$\overline{CLR}$	"	"					"
		10								"							1 mA	"	1$\overline{CLR}$	"	"					"
V_{IC} (neg) 1/		11	-1 mA							GND								1/	1CLK		-1.5					"
		12		-1 mA						"								"	1K		"					"
		13			-1 mA					"								"	1J		"					"
		14				-1 mA				"								"	1$\overline{PRE}$		"					"
		15								"		-1 mA						"	2$\overline{PRE}$		"					"
		16								"			-1 mA					"	2J		"					"
		17								"				-1 mA				"	2K		"					"
		18								"					-1 mA			"	2CLK		"					"
		19								"						-1 mA		"	2$\overline{CLR}$		"					"
		20								"							-1 mA	"	1$\overline{CLR}$		"					"
I_{CC}	3005	21	6.0 V	6.0 V	6.0 V	GND				"		GND	6.0 V	6.0 V	6.0 V	6.0 V	6.0 V	6.0 V	V_{CC}		0.15		15			μA
		22	6.0 V	6.0 V	6.0 V	6.0 V				"		6.0 V	6.0 V	6.0 V	6.0 V	GND	GND	"	V_{CC}		0.15		15			μA
V_{OH3}	3006	23	1.2 V	1.2 V	4.2 V	1.2 V	-20 μA			"							4.2 V	"	1Q	5.95		5.95		5.95		V
		24	1.2 V	1.2 V	4.2 V	4.2 V		-20 μA		"							1.2 V	"	1$\overline{Q}$	"		"		"		"
		25								"	-20 μA	1.2 V	4.2 V	1.2 V	1.2 V	4.2 V		"	2Q	"		"		"		"
		26							-20 μA	"		4.2 V	4.2 V	1.2 V	1.2 V	1.2 V		"	2$\overline{Q}$	"		"		"		"
		27	2/	1.2 V	4.2 V	4.2 V	-20 μA			"							4.2 V	"	1Q	"		"		"		"
		28	2/	4.2 V	1.2 V	4.2 V		-20 μA		"							4.2 V	"	1$\overline{Q}$	"		"		"		"
		29								"	-20 μA	4.2 V	4.2 V	1.2 V	2/	4.2 V		"	2Q	"		"		"		"
		30							-20 μA	"		4.2 V	1.2 V	4.2 V	2/	4.2 V		"	2$\overline{Q}$	"		"		"		"
V_{OH5}	3006	31	1.2 V	1.2 V	4.2 V	1.2 V	-5.2 mA			"							4.2 V	"	1Q	5.48		5.2		5.48		"
		32	1.2 V	1.2 V	4.2 V	4.2 V		-5.2 mA		"							1.2 V	"	1$\overline{Q}$	"		"		"		"
		33								"	-5.2 mA	1.2 V	4.2 V	1.2 V	1.2 V	4.2 V		"	2Q	"		"		"		"
		34							-5.2 mA	"		4.2 V	4.2 V	1.2 V	1.2 V	1.2 V		"	2$\overline{Q}$	"		"		"		"

See footnotes at end of table.

TABLE III. Group A inspection for device type 05 - Continued.

Symbol	MIL-STD-883 method	Case 2 / Cases E, F	Test no.	Terminal conditions 1/ 2 / 1 1CLK	3 / 2 1K	4 / 3 1J	5 / 4 1$\overline{PRE}$	7 / 5 1Q	8 / 6 1$\overline{Q}$	9 / 7 2$\overline{Q}$	10 / 8 GND	12 / 9 2Q	13 / 10 2$\overline{PRE}$	14 / 11 2J	15 / 12 2K	17 / 13 2CLK	18 / 14 2$\overline{CLK}$	19 / 15 1$\overline{CLR}$	20 / 16 V_{CC}	Measured terminal	Test limits: Subgroup 1 T_C = +25°C Min	Subgroup 1 Max	Subgroup 2 T_C = +125°C Min	Subgroup 2 Max	Subgroup 3 T_C = -55°C Min	Subgroup 3 Max	Unit
V_{OH5}	3006		35	2/	1.2 V	4.2 V	4.2 V	-5.2 mA			GND							4.2 V	6.0 V	1Q	5.48		5.2		5.48		V
			36	$\overline{2}$/	4.2 V	1.2 V	4.2 V		-5.2 mA		"							4.2 V	"	1$\overline{Q}$	"		"		"		"
			37								"	-5.2 mA	4.2 V	4.2 V	1.2 V	2/	4.2 V		"	2Q	"		"		"		"
			38							-5.2 mA	"		4.2 V	1.2 V	4.2 V	$\overline{2}$/	4.2 V		"	2$\overline{Q}$	"		"		"		"
V_{OL3}	3007		39	1.2 V	4.2 V	1.2 V	4.2 V	20 µA			"							1.2 V	"	1Q		0.05		0.05		0.05	"
			40	1.2 V	4.2 V	1.2 V	1.2 V		20 µA		"							4.2 V	"	1$\overline{Q}$		"		"		"	"
			41								"	20 µA	4.2 V	1.2 V	4.2 V	1.2 V	1.2 V		"	2Q		"		"		"	"
			42							20 µA	"		1.2 V	1.2 V	4.2 V	1.2 V	4.2 V		"	2$\overline{Q}$		"		"		"	"
			43	2/	4.2 V	1.2 V	4.2 V	20 µA			"							4.2 V	"	1Q		"		"		"	"
			44	$\overline{2}$/	1.2 V	4.2 V	4.2 V		20 µA		"							4.2 V	"	1$\overline{Q}$		"		"		"	"
			45								"	20 µA	4.2 V	1.2 V	4.2 V	2/	4.2 V		"	2Q		"		"		"	"
			46							20 µA	"		4.2 V	4.2 V	1.2 V	$\overline{2}$/	4.2 V		"	2$\overline{Q}$		"		"		"	"
V_{OL5}	3007		47	1.2 V	4.2 V	1.2 V	4.2 V	5.2 mA			"							1.2 V	"	1Q		0.26		0.4		0.26	"
			48	1.2 V	4.2 V	1.2 V	1.2 V		5.2 mA		"							4.2 V	"	1$\overline{Q}$		"		"		"	"
			49								"	5.2 mA	4.2 V	1.2 V	4.2 V	1.2 V	1.2 V		"	2Q		"		"		"	"
			50							5.2 mA	"		1.2 V	1.2 V	4.2 V	1.2 V	4.2 V		"	2$\overline{Q}$		"		"		"	"
			51	2/	4.2 V	1.2 V	4.2 V	5.2 mA			"							4.2 V	"	1Q		"		"		"	"
			52	$\overline{2}$/	1.2 V	4.2 V	4.2 V		5.2 mA		"							4.2 V	"	1$\overline{Q}$		"		"		"	"
			53								"	5.2 mA	4.2 V	1.2 V	4.2 V	2/	4.2 V		"	2Q		"		"		"	"
			54							5.2 mA	"		4.2 V	4.2 V	1.2 V	$\overline{2}$/	4.2 V		"	2$\overline{Q}$		"		"		"	"
I_{OS4}	3011		55	GND	GND	GND	GND	GND			"							4.0 V	4.0 V	1Q	-10	-120	-10	-120	-10	-120	mA
			56	GND	GND	GND	4.0 V		GND		"							GND	"	1$\overline{Q}$	"	"	"	"	"	"	"
			57								"	GND	GND	GND	GND	GND	4.0 V		"	2Q	"	"	"	"	"	"	"
			58							GND	"		4.0 V	GND	GND	GND	GND		"	2$\overline{Q}$	"	"	"	"	"	"	"
I_{IH}	3010		59	6.0 V							"								6.0 V	1CLK		50		100			nA
			60		6.0 V						"								"	1K		"		"			"
			61			6.0 V					"								"	1J		"		"			"
			62				6.0 V				"								"	1$\overline{PRE}$		"		"			"
			63								"		6.0 V						"	2$\overline{PRE}$		"		"			"
			64								"			6.0 V					"	2J		"		"			"
			65								"				6.0 V				"	2K		"		"			"
			66								"					6.0 V			"	2CLK		"		"			"
			67								"						6.0 V		"	2$\overline{CLK}$		"		"			"
			68								"							6.0 V	"	1$\overline{CLR}$		"		"			"

See footnotes at end of table.

TABLE III. Group A inspection for device type 05 - Continued.

Symbol	MIL-STD-883 method	Case 2 / Cases E, F	Test no.	Terminal conditions 1/ 2 / 1 / 1CLK	3 / 2 / 1K	4 / 3 / 1J	5 / 4 / 1$\overline{PRE}$	7 / 5 / 1Q	8 / 6 / 1$\overline{Q}$	9 / 7 / 2$\overline{Q}$	10 / 8 / GND	12 / 9 / 2Q	13 / 10 / 2$\overline{PRE}$	14 / 11 / 2J	15 / 12 / 2K	17 / 13 / 2CLK	18 / 14 / 2$\overline{CLK}$	19 / 15 / 1$\overline{CLR}$	20 / 16 / V_{CC}	Measured terminal	Test limits: Subgroup 1 T_C = +25°C Min	Subgroup 1 Max	Subgroup 2 T_C = +125°C Min	Subgroup 2 Max	Subgroup 3 T_C = -55°C Min	Subgroup 3 Max	Unit
I_{IL}	3009		69	GND							GND								6.0 V	1CLK		-50		-100			nA
			70		GND						"								"	1K		"		"			"
			71			GND					"								"	1J		"		"			"
			72				GND				"								"	1$\overline{PRE}$		"		"			"
			73								"		GND						"	2$\overline{PRE}$		"		"			"
			74								"			GND					"	2J		"		"			"
			75								"				GND				"	2K		"		"			"
			76								"					GND			"	2CLK		"		"			"
			77								"						GND		"	2$\overline{CLK}$		"		"			"
			78								"							GND	"	1$\overline{CLR}$		"		"			"
																					Subgroup 4 T_C = +25°C						
C_I	3012		79	4/							GND								GND	1CLK		10					pF
			80		4/						"								"	1K		"					"
			81			4/					"								"	1J		"					"
			82				4/				"								"	1$\overline{PRE}$		"					"
			83								"		4/						"	2$\overline{PRE}$		"					"
			84								"			4/					"	2J		"					"
			85								"				4/				"	2K		"					"
			86								"					4/			"	2CLK		"					"
			87								"						4/		"	2$\overline{CLK}$		"					"
			88								"							4/	"	1$\overline{CLR}$		"					"
																					Subgroup 7 T_C = +25°C		Subgroup 8 T_C = +125°C		Subgroup 8 T_C = -55°C		
Truth table tests 6/ 7/	3014		89	A	B	A	A	L	H	H	GND	L	A	A	A	B	B	E	6.0 V	All outputs	5/	5/	5/	5/	5/	5/	
			90	B	B	A	A	L	H	H	"	L	A	A	B	B	B	E	"	"	"	"	"	"	"	"	
			91	A	B	A	A	L	H	H	"	L	A	A	B	A	B	E	"	"	"	"	"	"	"	"	
			92	A	A	A	A	L	H	H	"	L	A	A	A	A	B	E	"	"	"	"	"	"	"	"	
			93	A	A	A	A	L	H	H	"	L	A	A	A	A	A	A	"	"	"	"	"	"	"	"	
			94	A	A	B	A	L	H	H	"	L	A	B	A	A	A	A	"	"	"	"	"	"	"	"	
			95	A	A	B	B	H	L	L	"	H	B	B	A	A	A	A	"	"	"	"	"	"	"	"	
			96	B	A	B	B	H	L	L	"	H	B	B	A	B	A	A	"	"	"	"	"	"	"	"	
			97	A	A	B	B	H	L	L	"	H	B	B	A	A	A	A	"	"	"	"	"	"	"	"	
			98	A	A	B	A	H	L	L	"	H	A	B	A	A	A	A	"	"	"	"	"	"	"	"	
			99	A	B	B	A	H	L	L	"	H	A	B	B	A	A	A	"	"	"	"	"	"	"	"	
			100	B	B	B	A	H	L	L	"	H	A	B	B	B	A	A	"	"	"	"	"	"	"	"	
			101	A	B	B	A	H	L	L	"	H	A	B	B	A	A	A	"	"	"	"	"	"	"	"	
			102	A	B	B	A	L	H	H	"	L	A	B	B	A	B	B	"	"	"	"	"	"	"	"	
			103	A	B	B	A	L	H	H	"	L	A	B	B	A	A	A	"	"	"	"	"	"	"	"	
			104	B	B	B	A	L	H	H	"	L	A	B	B	B	A	A	"	"	"	"	"	"	"	"	
			105	A	B	B	A	L	H	H	"	L	A	B	B	A	A	A	"	"	"	"	"	"	"	"	
			106	A	B	A	A	L	H	H	"	L	A	A	B	A	A	A	"	"	"	"	"	"	"	"	
			107	B	B	A	A	H	L	L	"	H	A	A	B	B	A	A	"	"	"	"	"	"	"	"	
			108	A	B	A	A	H	L	L	"	H	A	A	B	A	A	A	"	"	"	"	"	"	"	"	
			109	A	A	A	A	H	L	L	"	H	A	A	A	A	A	A	"	"	"	"	"	"	"	"	
			110	A	A	B	A	H	L	L	"	H	A	B	A	A	A	A	"	"	"	"	"	"	"	"	

TABLE III. Group A inspection for device type 05 - Continued.

Symbol	MIL-STD-883 method	Case 2 / Cases E, F	Terminal conditions 1/																Measured terminal	Test limits						Unit
			2	3	4	5	7	8	9	10	12	13	14	15	17	18	19	20		Subgroup 7 T_C = +25°C		Subgroup 8 T_C = +125°C		Subgroup 9 T_C = -55°C		
			1	2	3	4	5	6	7	8	9	10	11	12	13	14	15	16								
		Test no.	1CLK	1K	1J	1$\overline{PRE}$	1Q	1$\overline{Q}$	2$\overline{Q}$	GND	2Q	2$\overline{PRE}$	2J	2K	2CLK	2$\overline{CLR}$	1$\overline{CLR}$	V_{CC}		Min	Max	Min	Max	Min	Max	
Truth table tests 6/ 7/	3014	111	B	A	B	A	L	H	H	GND	L	A	B	A	B	A	A	6.0 V	All outputs	5/	5/	5/	5/	5/	5/	
		112	A	A	A	A	L	H	H	"	L	A	B	A	A	A	A	"	"	"	"	"	"	"	"	
		113	A	A	A	A	L	H	H	"	L	A	A	A	A	A	A	"	"	"	"	"	"	"	"	
		114	B	A	A	A	H	L	L	"	H	A	A	A	B	A	A	"	"	"	"	"	"	"	"	
		115	A	A	A	A	H	L	L	"	H	A	A	A	A	A	A	"	"	"	"	"	"	"	"	
		116	B	A	A	A	L	H	H	"	L	A	A	A	B	A	A	"	"	"	"	"	"	"	"	
		117	A	A	A	A	L	H	H	"	L	A	A	A	A	A	A	"	"	"	"	"	"	"	"	
		118	A	A	A	A	L	H	H	"	L	A	A	A	A	A	A	"	"	"	"	"	"	"	"	
																				Test limits 8/						
																				Subgroup 9 T_C = +25°C		Subgroup 10 T_C = +125°C		Subgroup 11 T_C = -55°C		
f_{MAX} 7/ 3/	(Fig. 4)	119	IN	4.5 V	4.5 V	4.5 V	OUT			GND							4.5 V	4.5 V	1Q	28		21		28		MHz
		120	IN	4.5 V	4.5 V	4.5 V		OUT		"							4.5 V	"	1$\overline{Q}$	"		"		"		"
		121								"	OUT	4.5 V	4.5 V	4.5 V	IN	4.5 V		"	2Q	"		"		"		"
		122							OUT	"		4.5 V	4.5 V	4.5 V	IN	4.5 V		"	2$\overline{Q}$	"		"		"		"
t_{PHL1} 7/	3003 (Fig. 4)	123	IN	4.5 V	IN	4.5 V	OUT			"							4.5 V	"	1CLK to 1Q	5	31	5	41	5	31	ns
		124	IN	IN	4.5 V	4.5 V		OUT		"							4.5 V	"	1CLK to 1$\overline{Q}$	"	"	"	"	"	"	"
		125								"	OUT	4.5 V	IN	4.5 V	IN	4.5 V		"	2CLK to 2Q	"	"	"	"	"	"	"
		126							OUT	"		4.5 V	4.5 V	IN	IN	4.5 V		"	2CLK to 2$\overline{Q}$	"	"	"	"	"	"	"
t_{PLH1} 7/	3003 (Fig. 4)	127	IN	GND	IN	4.5 V	OUT			"							4.5 V	"	1CLK to 1Q	"	"	"	"	"	"	"
		128	IN	IN	GND	4.5 V		OUT		"							4.5 V	"	1CLK to 1$\overline{Q}$	"	"	"	"	"	"	"
		129								"	OUT	4.5 V	IN	GND	IN	4.5 V		"	2CLK to 2Q	"	"	"	"	"	"	"
		130							OUT	"		4.5 V	GND	IN	IN	4.5 V		"	2CLK to 2$\overline{Q}$	"	"	"	"	"	"	"
t_{PHL2} 7/	3003 (Fig. 4)	131	GND	4.5 V	4.5 V	4.5 V	OUT			"							IN	"	1$\overline{CLR}$ to 1Q	6	32	6	43	6	32	"
		132	GND	4.5 V	4.5 V	IN		OUT		"							4.5 V	"	1$\overline{PRE}$ to 1$\overline{Q}$	"	"	"	"	"	"	"
		133								"	OUT	4.5 V	4.5 V	4.5 V	GND	IN		"	2$\overline{CLR}$ to 2Q	"	"	"	"	"	"	"
		134							OUT	"		IN	4.5 V	4.5 V	GND	4.5 V		"	2$\overline{PRE}$ to 2$\overline{Q}$	"	"	"	"	"	"	"
t_{PLH2} 7/	3003 (Fig. 4)	135	GND	4.5 V	4.5 V	IN	OUT			"							4.5 V	"	1$\overline{PRE}$ to 1Q	"	"	"	"	"	"	"
		136	GND	4.5 V	4.5 V	4.5 V		OUT		"							IN	"	1$\overline{CLR}$ to 1$\overline{Q}$	"	"	"	"	"	"	"
		137								"	OUT	IN	4.5 V	4.5 V	GND	4.5 V		"	2$\overline{PRE}$ to 2Q	"	"	"	"	"	"	"
		138							OUT	"		4.5 V	4.5 V	4.5 V	GND	IN		"	2$\overline{CLR}$ to 2$\overline{Q}$	"	"	"	"	"	"	"
t_{THL} 7/	3004 (Fig. 4)	139	IN	4.5 V	IN	4.5 V	OUT			"							4.5 V	"	1Q	3	15	3	20	3	15	"
		140	IN	IN	4.5 V	4.5 V		OUT		"							4.5 V	"	1$\overline{Q}$	"	"	"	"	"	"	"
		141								"	OUT	4.5 V	IN	4.5 V	IN	4.5 V		"	2Q	"	"	"	"	"	"	"
		142							OUT	"		4.5 V	4.5 V	IN	IN	4.5 V		"	2$\overline{Q}$	"	"	"	"	"	"	"
t_{TLH} 7/	3004 (Fig. 4)	143	IN	GND	IN	4.5 V	OUT			"							4.5 V	"	1Q	"	"	"	"	"	"	"
		144	IN	IN	GND	4.5 V		OUT		"							4.5 V	"	1$\overline{Q}$	"	"	"	"	"	"	"
		145								"	OUT	4.5 V	N	GND	IN	4.5 V		"	2Q	"	"	"	"	"	"	"
		146							OUT	"		4.5 V	GND	IN	IN	4.5 V		"	2$\overline{Q}$	"	"	"	"	"	"	"

See footnotes at end of table.

TABLE III. Group A inspection for device type 06.

Symbol	MIL-STD-883 method	Case 2	2	3	4	5	7	8	9	10	12	13	14	15	17	18	19	20	Measured terminal	Subgroup 1 T_C = +25°C		Subgroup 2 T_C = +125°C		Subgroup 3 T_C = -55°C		Unit
		Cases E, F	1	2	3	4	5	6	7	8	9	10	11	12	13	14	15	16								
		Test no.	OE_1	OE_2	1Q	2Q	3Q	4Q	CLK	GND	$\overline{E}_1$	$\overline{E}_2$	4D	3D	2D	1D	CLR	V_{CC}		Min	Max	Min	Max	Min	Max	
V_{IC} (pos) 1/		1	1 mA							1/								GND	OE_1	1/	1.5					V
		2		1 mA						"								"	OE_2	"	"					"
		3							1 mA	"								"	CLK	"	"					"
		4								"	1 mA							"	$\overline{E}_1$	"	"					"
		5								"		1 mA						"	$\overline{E}_2$	"	"					"
		6								"			1 mA					"	4D	"	"					"
		7								"				1 mA				"	3D	"	"					"
		8								"					1 mA			"	2D	"	"					"
		9								"						1 mA		"	1D	"	"					"
		10								"							1 mA	"	CLR	"	"					"
V_{IC} (neg) 1/		11	-1 mA							GND								1/	OE_1		-1.5					"
		12		-1 mA						"								"	OE_2		"					"
		13							-1 mA	"								"	CLK		"					"
		14								"	-1 mA							"	$\overline{E}_1$		"					"
		15								"		-1 mA						"	$\overline{E}_2$		"					"
		16								"			-1 mA					"	4D		"					"
		17								"				-1 mA				"	3D		"					"
		18								"					-1 mA			"	2D		"					"
		19								"						-1 mA		"	1D		"					"
		20								"							-1 mA	"	CLR		"					"
I_{CC}	3005	21	GND	GND					2/	"	GND	GND	6.0 V	6.0 V	6.0 V	6.0 V	GND	6.0 V	V_{CC}		0.2		20			μA
		22	GND	GND					GND	"	"	"	"	"	"	"	6.0 V	"	"		0.2		20			"
I_{CCZ}		23	6.0 V	6.0 V					GND	"	"	"	"	"	"	"	6.0 V	"	"		0.1		10			"
V_{OH3}	3006	24	1.2 V	1.2 V	-20 μA				2/	"	1.2 V	1.2 V	1.2 V	1.2 V	1.2 V	4.2 V	1.2 V	"	1Q	5.95		5.95		5.95		V
		25	"	"		-20 μA			"	"	"	"	"	1.2 V	4.2 V	1.2 V	"	"	2Q	"		"		"		"
		26	"	"			-20 μA		"	"	"	"	"	4.2 V	1.2 V	"	"	"	3Q	"		"		"		"
		27	"	"				-20 μA	"	"	"	"	4.2 V	1.2 V	1.2 V	"	"	"	4Q	"		"		"		"
V_{OH5}	3006	28	"	"	-7.8 mA				"	"	"	"	1.2 V	1.2 V	1.2 V	4.2 V	"	"	1Q	5.48		5.2		5.48		"
		29	"	"		-7.8 mA			"	"	"	"	"	1.2 V	4.2 V	1.2 V	"	"	2Q	"		"		"		"
		30	"	"			-7.8 mA		"	"	"	"	"	4.2 V	1.2 V	1.2 V	"	"	3Q	"		"		"		"
		31	"	"				-7.8 mA	"	"	"	"	4.2 V	1.2 V	1.2 V	1.2 V	"	"	4Q	"		"		"		"
V_{OL3}	3007	32	"	"	20 μA				1.2 V	"	"	"	"	4.2 V	4.2 V	4.2 V	4.2 V	"	1Q		0.05		0.05		0.05	"
		33	"	"		20 μA			"	"	"	"	"	"	"	"	"	"	2Q		"		"		"	"
		34	"	"			20 μA		"	"	"	"	"	"	"	"	"	"	3Q		"		"		"	"
		35	"	"				20 μA	"	"	"	"	"	"	"	"	"	"	4Q		"		"		"	"

See footnotes at end of table.

TABLE III. Group A inspection for device type 06 - Continued.

Symbol	MIL-STD-883 method	Case 2 / Cases E, F	Test no.	Terminal conditions 1/: 2 / 1 / OE_1	3 / 2 / OE_2	4 / 3 / 1Q	5 / 4 / 2Q	7 / 5 / 3Q	8 / 6 / 4Q	9 / 7 / CLK	10 / 8 / GND	12 / 9 / $\overline{E}_1$	13 / 10 / $\overline{E}_2$	14 / 11 / 4D	15 / 12 / 3D	17 / 13 / 2D	18 / 14 / 1D	19 / 15 / CLR	20 / 16 / V_{CC}	Measured terminal	Test limits: Subgroup 1 T_C = +25°C Min	Subgroup 1 Max	Subgroup 2 T_C = +125°C Min	Subgroup 2 Max	Subgroup 3 T_C = -55°C Min	Subgroup 3 Max	Unit
V_{OL3}	3007		36	1.2 V	1.2 V	20 μA	20 μA	20 μA	20 μA	2/	GND	1.2 V	1.2 V	4.2 V	4.2 V	4.2 V	1.2 V	1.2 V	6.0 V	1Q		0.05		0.05		0.05	V
			37	"	"					"	"	"	"	"	4.2 V	1.2 V	4.2 V	"	"	2Q		"		"		"	"
			38	"	"					"	"	"	"	"	1.2 V	4.2 V	"	"	"	3Q		"		"		"	"
			39	"	"					"	"	"	"	1.2 V	4.2 V	"	"	"	"	4Q		"		"		"	"
V_{OL5}	3007		40	"	"	7.8 mA	7.8 mA	7.8 mA	7.8 mA	1.2 V	"	"	"	4.2 V	"	"	"	4.2 V	"	1Q		0.26		0.4		0.26	"
			41	"	"					"	"	"	"	"	"	"	"	"	"	2Q		"		"		"	"
			42	"	"					"	"	"	"	"	"	"	"	"	"	3Q		"		"		"	"
			43	"	"					"	"	"	"	"	"	"	"	"	"	4Q		"		"		"	"
			44	"	"	7.8 mA				2/	"	"	"	"	"	"	1.2 V	1.2 V	"	1Q		"		"		"	"
			45	"	"		7.8 mA			"	"	"	"	"	"	1.2 V	4.2 V	"	"	2Q		"		"		"	"
			46	"	"			7.8 mA		"	"	"	"	"	1.2 V	4.2 V	"	"	"	3Q		"		"		"	"
			47	"	"				7.8 mA	"	"	"	"	1.2 V	4.2 V	4.2 V	"	"	"	4Q		"		"		"	"
I_{OS}	3011		48	GND	GND	GND	GND	GND	GND	"	"	GND	GND	4.0 V	4.0 V	4.0 V	4.0 V	GND	4.0 V	1Q	-10	-135	-10	-135	-10	-135	mA
			49	"	"					"	"	"	"	"	"	"	"	"	"	2Q	"	"	"	"	"	"	"
			50	"	"					"	"	"	"	"	"	"	"	"	"	3Q	"	"	"	"	"	"	"
			51	"	"				GND	"	"	"	"	"	"	"	"	"	"	4Q	"	"	"	"	"	"	"
I_{OZH}			52	1.2 V	11/	6.0 V	6.0 V	6.0 V	6.0 V	"	"	4.2 V	4.2 V					1.2 V	6.0 V	1Q		0.2		2.0			μA
			53	"	"					"	"	"	"					"	"	2Q		"		"			"
			54	"	"					"	"	"	"					"	"	3Q		"		"			"
			55	"	"					"	"	"	"					"	"	4Q		"		"			"
I_{OZL}			56	11/	1.2 V	GND	GND	GND	GND	"	"	"	"					"	"	1Q		-0.2		-2.0			"
			57	"	"					"	"	"	"					"	"	2Q		"		"			"
			58	"	"					"	"	"	"					"	"	3Q		"		"			"
			59	"	"					"	"	"	"					"	"	4Q		"		"			"
I_{IH}	3010		60	6.0 V							"								"	OE_1		50		100			mA
			61		6.0 V						"								"	OE_2		"		"			"
			62							6.0 V	"								"	CLK		"		"			"
			63								"	6.0 V							"	$\overline{E}_1$		"		"			"
			64								"		6.0 V						"	$\overline{E}_2$		"		"			"
			65								"			6.0 V					"	4D		"		"			"
			66								"				6.0 V				"	3D		"		"			"
			67								"					6.0 V			"	2D		"		"			"
			68								"						6.0 V		"	1D		"		"			"
			69								"							6.0 V	"	CLR		"		"			"
I_{IL}	3009		70	GND							"								"	OE_1		-50		-100			"
			71		GND						"								"	OE_2		"		"			"
			72							GND	"								"	CLK		"		"			"
			73								"	GND							"	$\overline{E}_1$		"		"			"
			74								"		GND						"	$\overline{E}_2$		"		"			"
			75								"			GND					"	4D		"		"			"
			76								"				GND				"	3D		"		"			"
			77								"					GND			"	2D		"		"			"
			78								"						GND		"	1D		"		"			"
			79								"							GND	"	CLR		"		"			"
																					Subgroup 4 T_C = +25°C						
C_I	3012		80	4/							"								GND	OE_1		10					pF
			81		4/						"								"	OE_2		"					"
			82							4/	"								"	CLK		"					"
			83								"	4/							"	$\overline{E}_1$		"					"
			84								"		4/						"	$\overline{E}_2$		"					"
			85								"			4/					"	4D		"					"
			86								"				4/				"	3D		"					"
			87								"					4/			"	2D		"					"
			88								"						4/		"	1D		"					"
			89								"							4/	"	CLR		"					"

See footnotes at end of table.

TABLE III. Group A inspection for device type 06 - Continued.

Symbol	MIL-STD-883 method	Case 2 / Cases E, F	Terminal conditions 1/																Measured terminal	Test limits						Unit
			2	3	4	5	7	8	9	10	12	13	14	15	17	18	19	20		Subgroup 4 T_C = +25°C						
			1	2	3	4	5	6	7	8	9	10	11	12	13	14	15	16								
		Test no.	OE_1	OE_2	1Q	2Q	3Q	4Q	CLK	GND	E_1	E_2	4D	3D	2D	1D	CLR	V_{CC}		Min	Max					
C_O	3012	90	GND	6.0 V	4/					GND	6.0 V	6.0 V					GND	6.0 V	1Q		20					pF
		91	GND	6.0 V		4/				"	"	"					"	"	2Q		"					"
		92	6.0 V	GND			4/			"	"	"					"	"	3Q		"					"
		93	6.0 V	GND				4/		"	"	"					"	"	4Q		"					"
																				Subgroup 7 T_C = +25°C		Subgroup 8 T_C = +125°C		Subgroup 8 T_C = -55°C		
Truth table tests 6/ 7/	3014	94	B	B	L	L	L	L	B	GND	B	B	A	A	A	A	A	4.5 V	All outputs	5/	5/	5/	5/	5/	5/	
		95	B	B	L	L	L	L	B	"	B	B	A	A	A	A	B	"	"	"	"	"	"	"	"	
		96	B	B	H	H	H	H	A	"	B	B	A	A	A	A	B	"	"	"	"	"	"	"	"	
		97	B	B	H	H	H	H	B	"	B	B	A	A	A	A	B	"	"	"	"	"	"	"	"	
		98	B	B	H	H	H	H	B	"	B	B	B	B	B	B	B	"	"	"	"	"	"	"	"	
		99	B	B	H	H	H	H	B	"	A	B	B	B	B	B	B	"	"	"	"	"	"	"	"	
		100	B	B	H	H	H	H	A	"	A	B	B	B	B	B	B	"	"	"	"	"	"	"	"	
		101	B	B	H	H	H	H	B	"	A	B	B	B	B	B	B	"	"	"	"	"	"	"	"	
		102	B	B	H	H	H	H	B	"	A	A	B	B	B	B	B	"	"	"	"	"	"	"	"	
		103	B	B	H	H	H	H	A	"	A	A	B	B	B	B	B	"	"	"	"	"	"	"	"	
		104	B	B	H	H	H	H	B	"	A	A	B	B	B	B	B	"	"	"	"	"	"	"	"	
		105	B	B	H	H	H	H	B	"	B	A	B	B	B	B	B	"	"	"	"	"	"	"	"	
		106	B	B	H	H	H	H	A	"	B	A	B	B	B	B	B	"	"	"	"	"	"	"	"	
		107	B	B	H	H	H	H	B	"	B	A	B	B	B	B	B	"	"	"	"	"	"	"	"	
		108	B	B	H	H	H	H	B	"	B	B	B	B	B	B	B	"	"	"	"	"	"	"	"	
		109	B	B	L	L	L	L	A	"	B	B	B	B	B	B	B	"	"	"	"	"	"	"	"	
		110	B	B	L	L	L	L	B	"	B	B	B	B	B	B	B	"	"	"	"	"	"	"	"	
		111	B	B	L	L	L	L	B	"	B	B	A	A	B	B	B	"	"	"	"	"	"	"	"	
		112	B	B	L	L	L	L	B	"	A	B	A	A	A	B	B	"	"	"	"	"	"	"	"	
		113	B	B	L	L	L	L	A	"	A	B	A	A	A	B	B	"	"	"	"	"	"	"	"	
		114	B	B	L	L	L	L	B	"	A	B	A	A	A	B	B	"	"	"	"	"	"	"	"	
		115	B	B	L	L	L	L	B	"	A	A	A	A	A	B	B	"	"	"	"	"	"	"	"	
		116	B	B	L	L	L	L	A	"	A	A	A	A	A	B	B	"	"	"	"	"	"	"	"	
		117	B	B	L	L	L	L	B	"	A	A	A	A	A	A	B	"	"	"	"	"	"	"	"	
		118	B	B	L	L	L	L	B	"	B	A	A	A	A	A	B	"	"	"	"	"	"	"	"	
		119	B	B	L	L	L	L	A	"	B	A	A	A	A	A	B	"	"	"	"	"	"	"	"	
		120	B	B	L	L	L	L	B	"	B	A	A	A	A	A	B	"	"	"	"	"	"	"	"	
		121	B	B	L	L	L	L	B	"	B	B	A	A	A	A	B	"	"	"	"	"	"	"	"	
		122	B	B	L	L	L	L	B	"	B	B	A	A	A	A	B	"	"	"	"	"	"	"	"	
																				Test limits 8/						
																				Subgroup 9 T_C = +25°C		Subgroup 10 T_C = +125°C		Subgroup 11 T_C = -55°C		
f_{MAX} 6/ 9/	(Fig. 4)	123	GND	GND	OUT				IN	GND	GND	GND				IN	GND	4.5 V	1Q	31		23		31		MHz
		124	"	"		OUT			"	"	"	"			IN		"	"	2Q	"		"		"		"
		125	"	"			OUT		"	"	"	"		IN			"	"	3Q	"		"		"		"
		126	"	"				OUT	"	"	"	"	IN				"	"	4Q	"		"		"		"
t_{PHL1} 7/	3003 (Fig. 4)	127	"	"	OUT				"	"	"	"				IN	"	"	1Q	6	35	6	47	6	35	ns
		128	"	"		OUT			"	"	"	"			IN		"	"	2Q	"	"	"	"	"	"	"
		129	"	"			OUT		"	"	"	"		IN			"	"	3Q	"	"	"	"	"	"	"
		130	"	"				OUT	"	"	"	"	IN				"	"	4Q	"	"	"	"	"	"	"
t_{PLH1} 7/	3003 (Fig. 4)	131	"	"	OUT				"	"	"	"				IN	"	"	1Q	"	"	"	"	"	"	"
		132	"	"		OUT			"	"	"	"			IN		"	"	2Q	"	"	"	"	"	"	"
		133	"	"			OUT		"	"	"	"		IN			"	"	3Q	"	"	"	"	"	"	"
		134	"	"				OUT	"	"	"	"	IN				"	"	4Q	"	"	"	"	"	"	"
t_{PHL2} 7/	3003 (Fig. 4)	135	"	"	OUT				10/	"	"	"				4.5 V	IN	"	1Q	5	31	5	41	5	31	"
		136	"	"		OUT			"	"	"	"			4.5 V		"	"	2Q	"	"	"	"	"	"	"
		137	"	"			OUT		"	"	"	"		4.5 V			"	"	3Q	"	"	"	"	"	"	"
		138	"	"				OUT	"	"	"	"	4.5 V				"	"	4Q	"	"	"	"	"	"	"

See footnotes at end of table.

TABLE III. Group A inspection for device type 06 - Continued.

Symbol	MIL-STD-883 method	Case 2 / Cases E, F	Terminal conditions 1/																Measured terminal	Test limits						Unit
			2	3	4	5	7	8	9	10	12	13	14	15	17	18	19	20		Subgroup 9 T_C = +25°C		Subgroup 10 T_C = +125°C		Subgroup 11 T_C = -55°C		
			1	2	3	4	5	6	7	8	9	10	11	12	13	14	15	16								
		Test no.	OE_1	OE_2	1Q	2Q	3Q	4Q	CLK	GND	$\overline{E}_1$	$\overline{E}_2$	4D	3D	2D	1D	CLR	V_{CC}		Min	Max	Min	Max	Min	Max	
t_{PHZ} 7/	3003 (Fig. 4)	139	IN	GND	OUT				10/	GND	GND	GND				4.5 V	GND	4.5 V	1Q	5	26	5	35	5	26	ns
		140	"	"		OUT			"	"	"	"			4.5 V		"	"	2Q	"	"	"	"	"	"	"
		141	"	"			OUT		"	"	"	"		4.5 V			"	"	3Q	"	"	"	"	"	"	"
		142	"	"				OUT	"	"	"	"	4.5 V				"	"	4Q	"	"	"	"	"	"	"
		143	GND	IN	OUT				"	"	"	"				4.5 V	"	"	1Q	"	"	"	"	"	"	"
		144	"	"		OUT			"	"	"	"			4.5 V		"	"	2Q	"	"	"	"	"	"	"
		145	"	"			OUT		"	"	"	"		4.5 V			"	"	3Q	"	"	"	"	"	"	"
		146	"	"				OUT	"	"	"	"	4.5 V				"	"	4Q	"	"	"	"	"	"	"
t_{PLZ} 7/	3003 (Fig. 4)	147	IN	GND	OUT				GND	"	"	"				4.5 V	10/	"	1Q	"	26	"	35	"	26	"
		148	"	"		OUT			"	"	"	"			4.5 V		"	"	2Q	"	"	"	"	"	"	"
		149	"	"			OUT		"	"	"	"		4.5 V			"	"	3Q	"	"	"	"	"	"	"
		150	"	"				OUT	"	"	"	"	4.5 V				"	"	4Q	"	"	"	"	"	"	"
		151	GND	IN	OUT				"	"	"	"				4.5 V	"	"	1Q	"	"	"	"	"	"	"
		152	"	"		OUT			"	"	"	"			4.5 V		"	"	2Q	"	"	"	"	"	"	"
		153	"	"			OUT		"	"	"	"		4.5 V			"	"	3Q	"	"	"	"	"	"	"
		154	"	"				OUT	"	"	"	"	4.5 V				"	"	4Q	"	"	"	"	"	"	"
t_{PZH} 7/	3003 (Fig. 4)	155	IN	GND	OUT				10/	"	"	"				4.5 V	GND	"	1Q	"	"	"	"	"	"	"
		156	"	"		OUT			"	"	"	"			4.5 V		"	"	2Q	"	"	"	"	"	"	"
		157	"	"			OUT		"	"	"	"		4.5 V			"	"	3Q	"	"	"	"	"	"	"
		158	"	"				OUT	"	"	"	"	4.5 V				"	"	4Q	"	"	"	"	"	"	"
		159	GND	IN	OUT				"	"	"	"				4.5 V	"	"	1Q	"	"	"	"	"	"	"
		160	"	"		OUT			"	"	"	"			4.5 V		"	"	2Q	"	"	"	"	"	"	"
		161	"	"			OUT		"	"	"	"		4.5 V			"	"	3Q	"	"	"	"	"	"	"
		162	"	"				OUT	"	"	"	"	4.5 V				"	"	4Q	"	"	"	"	"	"	"
t_{PZL} 7/	3003 (Fig. 4)	163	IN	GND	OUT				GND	"	"	"				4.5 V	10/	"	1Q	"	"	"	"	"	"	"
		164	"	"		OUT			"	"	"	"			4.5 V		"	"	2Q	"	"	"	"	"	"	"
		165	"	"			OUT		"	"	"	"		4.5 V			"	"	3Q	"	"	"	"	"	"	"
		166	"	"				OUT	"	"	"	"	4.5 V				"	"	4Q	"	"	"	"	"	"	"
		167	GND	IN	OUT				"	"	"	"				4.5 V	"	"	1Q	"	"	"	"	"	"	"
		168	"	"		OUT			"	"	"	"			4.5 V		"	"	2Q	"	"	"	"	"	"	"
		169	"	"			OUT		"	"	"	"		4.5 V			"	"	3Q	"	"	"	"	"	"	"
		170	"	"				OUT	"	"	"	"	4.5 V				"	"	4Q	"	"	"	"	"	"	"
t_{THL} 7/	3004 (Fig. 4)	171	"	GND	OUT				10/	"	"	"				4.5 V	IN	"	1Q	2	12	2	16	2	12	"
		172	"	"		OUT			"	"	"	"			4.5 V		"	"	2Q	"	"	"	"	"	"	"
		173	"	"			OUT		"	"	"	"		4.5 V			"	"	3Q	"	"	"	"	"	"	"
		174	"	"				OUT	"	"	"	"	4.5 V				"	"	4Q	"	"	"	"	"	"	"
t_{TLH} 7/	3004 (Fig. 4)	175	"	"	OUT				IN	"	"	"				4.5 V	10/	"	1Q	"	"	"	"	"	"	"
		176	"	"		OUT			"	"	"	"			4.5 V		"	"	2Q	"	"	"	"	"	"	"
		177	"	"			OUT		"	"	"	"		4.5 V			"	"	3Q	"	"	"	"	"	"	"
		178	"	"				OUT	"	"	"	"	4.5 V				"	"	4Q	"	"	"	"	"	"	"

See footnotes at end of table.

TABLE III. Group A inspection for device type 07.

Symbol	MIL-STD-883 method	Case 2 Cases E, F	Terminal conditions 1/																Measured terminal	Test limits						Unit
			2	3	4	5	7	8	9	10	12	13	14	15	17	18	19	20		Subgroup 1 T_C = +25°C		Subgroup 2 T_C = +125°C		Subgroup 3 T_C = -55°C		
			1	2	3	4	5	6	7	8	9	10	11	12	13	14	15	16								
		Test no.	$\overline{CLR}$	1Q	1D	2D	2Q	3D	3Q	GND	CLK	4Q	4D	5Q	5D	6D	6Q	V_{CC}		Min	Max	Min	Max	Min	Max	
V_{IC} (pos) 1/		1	1 mA							1/								GND	$\overline{CLR}$	1/	1.5					V
		2			1 mA					"								"	1D	"	"					"
		3				1 mA				"								"	2D	"	"					"
		4						1 mA		"								"	3D	"	"					"
		5								"	1 mA							"	CLK	"	"					"
		6								"			1 mA					"	4D	"	"					"
		7								"					1 mA			"	5D	"	"					"
		8								"						1 mA		"	6D	"	"					"
V_{IC} (neg) 1/		9	-1 mA							GND								1/	$\overline{CLR}$		-1.5					"
		10			-1 mA					"								"	1D		"					"
		11				-1 mA				"								"	2D		"					"
		12						-1 mA		"								"	3D		"					"
		13								"	-1 mA							"	CLK		"					"
		14								"			-1 mA					"	4D		"					"
		15								"					-1 mA			"	5D		"					"
		16								"						-1 mA		"	6D		"					"
I_{CC}	3005	17	GND		6.0 V	6.0 V		6.0 V		"	6.0 V		6.0 V		6.0 V	6.0 V		6.0 V	V_{CC}		0.2		20			μA
		18	6.0 V		6.0 V	6.0 V		6.0 V		"	2/		6.0 V		6.0 V	6.0 V		"	V_{CC}		0.2		20			"
V_{OH3}	3006	19	4.2 V	-20 μA	4.2 V					"	"							"	1Q	5.95		5.95		5.95		V
		20	"			4.2 V	-20 μA			"	"							"	2Q	"		"		"		"
		21	"					4.2 V	-20 μA	"	"							"	3Q	"		"		"		"
		22	"							"	"	-20 μA	4.2 V					"	4Q	"		"		"		"
		23	"							"	"			-20 μA	4.2 V			"	5Q	"		"		"		"
		24	"							"	"					4.2 V	-20 μA	"	6Q	"		"		"		"
V_{OH5}	3006	25	"	-5.2 mA	4.2 V					"	"							"	1Q	5.48		5.2		5.48		"
		26	"			4.2 V	-5.2 mA			"	"							"	2Q	"		"		"		"
		27	"					4.2 V	-5.2 mA	"	"							"	3Q	"		"		"		"
		28	"							"	"	-5.2 mA	4.2 V					"	4Q	"		"		"		"
		29	"							"	"			-5.2 mA	4.2 V			"	5Q	"		"		"		"
		30	"							"	"					4.2 V	-5.2 mA	"	6Q	"		"		"		"
V_{OL3}	3007	31	1.2 V	20 μA						"								"	1Q		0.05		0.05		0.05	"
		32	"				20 μA			"								"	2Q		"		"		"	"
		33	"						20 μA	"								"	3Q		"		"		"	"
		34	"							"		20 μA						"	4Q		"		"		"	"
		35	"							"				20 μA				"	5Q		"		"		"	"
		36	"							"							20 μA	"	6Q		"		"		"	"
		37	4.2 V	20 μA	1.2 V					"	2/							"	1Q		"		"		"	"
		38	"			1.2 V	20 μA			"	"							"	2Q		"		"		"	"
		39	"					1.2 V	20 μA	"	"							"	3Q		"		"		"	"
		40	"							"	"	20 μA	1.2 V					"	4Q		"		"		"	"
		41	"							"	"			20 μA	1.2 V			"	5Q		"		"		"	"
		42	"							"	"					1.2 V	20 μA	"	6Q		"		"		"	"

See footnotes at end of table.

TABLE III. Group A inspection for device type 07 - Continued.

Symbol	MIL-STD-883 method	Case 12 Cases E, F	Test no.	Terminal conditions 1/ 2 / 1 CLR	3 / 2 1Q	4 / 3 1D	5 / 4 2D	7 / 5 2Q	8 / 6 3D	9 / 7 3Q	10 / 8 GND	12 / 9 CLK	13 / 10 4Q	14 / 11 4D	15 / 12 5Q	17 / 13 5D	18 / 14 6D	19 / 15 6Q	20 / 16 V_{CC}	Measured terminal	Test limits: Subgroup 1 T_C = +25°C Min	Subgroup 1 Max	Subgroup 2 T_C = +125°C Min	Subgroup 2 Max	Subgroup 3 T_C = -55°C Min	Subgroup 3 Max	Unit
V_{OL5}	3007		43	1.2 V	5.2 mA				1.2 V		GND								6.0 V	1Q		0.26		0.4		0.26	V
			44	"				5.2 mA	"		"								"	2Q		"		"		"	"
			45	"					"	5.2 mA	"								"	3Q		"		"		"	"
			46	"					"		"		5.2 mA						"	4Q		"		"		"	"
			47	"					"		"								"	5Q		"		"		"	"
			48	"					"		"				5.2 mA				"	6Q		"		"		"	"
			49	4.2 V	5.2 mA	1.2 V			4.2 V		"							5.2 mA	"	1Q		"		"		"	"
			50	"			1.2 V	5.2 mA	4.2 V		"	2/							"	2Q		"		"		"	"
			51	"					1.2 V	5.2 mA	"	"							"	3Q		"		"		"	"
			52	"					4.2 V		"	"	5.2 mA	1.2 V					"	4Q		"		"		"	"
			53	"					"		"	"			5.2 mA	1.2 V			"	5Q		"		"		"	"
			54	"					"		"	"					1.2 V	5.2 mA	"	6Q		"		"		"	"
I_{OS4}	3011		55	4.0 V	GND	4.0 V	4.0 V		4.0 V		"	"		4.0 V		4.0 V	4.0 V		4.0 V	1Q	-10	-120	-10	-120	-10	-120	mA
			56	"		"	"	GND	"		"	"		"		"	"		"	2Q	"	"	"	"	"	"	"
			57	"		"	"		"	GND	"	"		"		"	"		"	3Q	"	"	"	"	"	"	"
			58	"		"	"		"		"	"	GND	"		"	"		"	4Q	"	"	"	"	"	"	"
			59	"		"	"		"		"	"		"	GND	"	"		"	5Q	"	"	"	"	"	"	"
			60	"		"	"		"		"	"		"		"	"	GND	"	6Q	"	"	"	"	"	"	"
I_{IH}	3010		61	6.0 V							"								6.0 V	CLR		50		100			nA
			62			6.0 V					"								"	1D		"		"			"
			63				6.0 V				"								"	2D		"		"			"
			64						6.0 V		"								"	3D		"		"			"
			65								"	6.0 V							"	CLK		"		"			"
			66								"			6.0 V					"	4D		"		"			"
			67								"					6.0 V			"	5D		"		"			"
			68								"						6.0 V		"	6D		"		"			"
I_{IL}	3009		69	GND							"								"	CLR		50		-100			"
			70			GND					"								"	1D		"		"			"
			71				GND				"								"	2D		"		"			"
			72						GND		"								"	3D		"		"			"
			73								"	GND							"	CLK		"		"			"
			74								"			GND					"	4D		"		"			"
			75								"					GND			"	5D		"		"			"
			76								"						GND		"	6D		"		"			"
																					Subgroup 4 T_C = +25°C						
C_I	3012		77	4/							GND								GND	CLR		10					pF
			78			4/					"								"	1D		"					"
			79				4/				"								"	2D		"					"
			80						4/		"								"	3D		"					"
			81								"	4/							"	CLK		"					"
			82								"			4/					"	4D		"					"
			83								"					4/			"	5D		"					"
			84								"						4/		"	6D		"					"
																					Subgroup 7 T_C = +25°C		Subgroup 8 T_C = +125°C		Subgroup 8 T_C = -55°C		
Truth table tests 6/ 7/			85	B	L	A	A	L	A	L	GND	B	L	A	L	A	A	L	4.5 V	All outputs	5/	5/	5/	5/	5/	5/	
			86	A	L	A	A	L	A	L	"	B	L	A	L	A	A	L	"	"	"	"	"	"	"	"	
			87	A	H	A	A	H	A	H	"	A	H	A	H	A	A	H	"	"	"	"	"	"	"	"	
			88	A	H	A	A	H	A	H	"	B	H	A	H	A	A	H	"	"	"	"	"	"	"	"	
			89	A	H	B	B	H	B	H	"	B	H	B	H	B	B	H	"	"	"	"	"	"	"	"	
			90	A	L	B	B	L	B	L	"	A	L	B	L	B	B	L	"	"	"	"	"	"	"	"	

See footnotes at end of table.

Only +0 V

TABLE III. Group A inspection for device type 07 - Continued.

Symbol	MIL-STD-883 method	Case 2 Cases E, F	Terminal conditions 1/																Measured terminal	Test limits 8/						Unit
			2	3	4	5	7	8	9	10	12	13	14	15	17	18	19	20		Subgroup 9 T_C = +25°C		Subgroup 10 T_C = +125°C		Subgroup 11 T_C = -55°C		
			1	2	3	4	5	6	7	8	9	10	11	12	13	14	15	16								
		Test no.	$\overline{CLR}$	1Q	1D	2D	2Q	3D	3Q	GND	CLK	4Q	4D	5Q	5D	6D	6Q	V_{CC}		Min	Max	Min	Max	Min	Max	
f_{MAX} 9/	3003 (Fig. 4)	91	4.5 V	OUT	IN					GND	IN							4.5 V	1Q	31		23		31		MHz
		92	"			IN	OUT			"	"							"	2Q	"		"		"		"
		93	"					IN	OUT	"	"							"	3Q	"		"		"		"
		94	"							"	"	OUT	IN					"	4Q	"		"		"		"
		95	"							"	"			OUT	IN			"	5Q	"		"		"		"
		96	"							"	"					IN	OUT	"	6Q	"		"		"		"
t_{PHL1} 7/	3003 (Fig. 4)	97	"	OUT	IN					"	"							"	CLK to 1Q	5	3	5	42	5	31	ns
		98	"			IN	OUT			"	"							"	CLK to 2Q	"	"	"	"	"	"	"
		99	"					IN	OUT	"	"							"	CLK to 3Q	"	"	"	"	"	"	"
		100	"							"	"	OUT	IN					"	CLK to 4Q	"	"	"	"	"	"	"
		101	"							"	"			OUT	IN			"	CLK to 5Q	"	"	"	"	"	"	"
		102	"							"	"					IN	OUT	"	CLK to 6Q	"	"	"	"	"	"	"
t_{PLH1} 7/	3003 (Fig. 4)	103	"	OUT	IN					"	"							"	CLK to 1Q	"	"	"	"	"	"	"
		104	"			IN	OUT			"	"							"	CLK to 2Q	"	"	"	"	"	"	"
		105	"					IN	OUT	"	"							"	CLK to 3Q	"	"	"	"	"	"	"
		106	"							"	"	OUT	IN					"	CLK to 4Q	"	"	"	"	"	"	"
		107	"							"	"			OUT	IN			"	CLK to 5Q	"	"	"	"	"	"	"
		108	"							"	"					IN	OUT	"	CLK to 6Q	"	"	"	"	"	"	"
t_{PHL2} 7/	3003 (Fig. 4)	109	IN	OUT	4.5 V					"	10/							"	CLR to 1Q	"	"	"	"	"	"	"
		110	"			4.5 V	OUT			"	"							"	CLR to 2Q	"	"	"	"	"	"	"
		111	"					4.5 V	OUT	"	"							"	CLR to 3Q	"	"	"	"	"	"	"
		112	"							"	"	OUT	4.5 V					"	CLR to 4Q	"	"	"	"	"	"	"
		113	"							"	"			OUT	4.5 V			"	CLR to 5Q	"	"	"	"	"	"	"
		114	"							"	"					4.5 V	OUT	"	CLR to 6Q	"	"	"	"	"	"	"
t_{THL} 7/	3004 (Fig. 4)	115	4.5 V	OUT	IN					"	IN							"	1Q	3	15	3	20	3	15	"
		116	"			IN	OUT			"	"							"	2Q	"	"	"	"	"	"	"
		117	"					IN	OUT	"	"							"	3Q	"	"	"	"	"	"	"
		118	"							"	"	OUT	IN					"	4Q	"	"	"	"	"	"	"
		119	"							"	"			OUT	IN			"	5Q	"	"	"	"	"	"	"
		120	"							"	"					IN	OUT	"	6Q	"	"	"	"	"	"	"
t_{TLH} 7/	3004 (Fig. 4)	121	"	OUT	IN					"	"							"	1Q	"	"	"	"	"	"	"
		122	"			IN	OUT			"	"							"	2Q	"	"	"	"	"	"	"
		123	"					IN	OUT	"	"							"	3Q	"	"	"	"	"	"	"
		124	"							"	"	OUT	IN					"	4Q	"	"	"	"	"	"	"
		125	"							"	"			OUT	IN			"	5Q	"	"	"	"	"	"	"
		126	"							"	"					IN	OUT	"	6Q	"	"	"	"	"	"	"

See footnotes at end of table.

TABLE III. Group A inspection for device type 08.

Symbol	MIL-STD-883 method	Case 2 Cases E, F	Terminal conditions 1/																Measured terminal	Test limits						Unit
			2	3	4	5	7	8	9	10	12	13	14	15	17	18	19	20		Subgroup 1 T_C = +25°C		Subgroup 2 T_C = +125°C		Subgroup 3 T_C = -55°C		
			1	2	3	4	5	6	7	8	9	10	11	12	13	14	15	16								
		Test no.	$\overline{CLR}$	1Q	$1\overline{Q}$	1D	2D	$2\overline{Q}$	2Q	GND	CLK	3Q	$3\overline{Q}$	3D	4D	4Q	4Q	V_{CC}		Min	Max	Min	Max	Min	Max	
V_{IC} (pos) 1/		1	1 mA							1/								GND	$\overline{CLR}$	1/	1.5					V
		2				1 mA				"								"	1D	"	"					"
		3					1 mA			"								"	2D	"	"					"
		4								"	1 mA							"	CLK	"	"					"
		5								"				1 mA				"	3D	"	"					"
		6								"					1 mA			"	4D	"	"					"
V_{IC} (neg) 1/		7	-1 mA							GND								1/	$\overline{CLR}$		-1.5					"
		8				-1 mA				"								"	1D		"					"
		9					-1 mA			"								"	2D		"					"
		10								"	-1 mA							"	CLK		"					"
		11								"				-1 mA				"	3D		"					"
		12								"					-1 mA			"	4D		"					"
I_{CC}	3005	13	GND			6.0 V	6.0 V			"	GND			6.0 V	6.0 V			6.0 V	V_{CC}		0.2		20			μA
		14	6.0 V			6.0 V	6.0 V			"	2/			6.0 V	6.0 V			"	V_{CC}		0.2		20			μA
V_{OH3}	3006	15	1.2 V		-20 μA					"								"	$1\overline{Q}$	5.95		5.95		5.95		V
		16	"					-20 μA		"								"	$2\overline{Q}$	"		"		"		"
		17	"							"			-20 μA					"	$3\overline{Q}$	"		"		"		"
		18	"							"						-20 μA		"	$4\overline{Q}$	"		"		"		"
		19	4.2 V	-20 μA		4.2 V				"	2/							"	1Q	"		"		"		"
		20	"				4.2 V		-20 μA	"	"			4.2 V				"	2Q	"		"		"		"
		21	"							"	"	-20 μA			4.2 V			"	3Q	"		"		"		"
		22	"							"	"						-20 μA	"	4Q	"		"		"		"
		23	"		-20 μA	1.2 V				"	"							"	$1\overline{Q}$	"		"		"		"
		24	"				1.2 V		-20 μA	"	"							"	$2\overline{Q}$	"		"		"		"
		25	"							"	"		-20 μA	1.2 V				"	$3\overline{Q}$	"		"		"		"
		26	"							"	"				1.2 V	-20 μA		"	$4\overline{Q}$	"		"		"		"
V_{OH5}	3006	27	1.2 V		-5.2 mA					"								"	$1\overline{Q}$	5.48		5.2		5.48		"
		28	"					-5.2 mA		"								"	$2\overline{Q}$	"		"		"		"
		29	"							"			-5.2 mA					"	$3\overline{Q}$	"		"		"		"
		30	"							"						-5.2 mA		"	$4\overline{Q}$	"		"		"		"
		31	4.2 V	-5.2 mA		4.2 V				"	2/							"	1Q	"		"		"		"
		32	"				4.2 V		-5.2 mA	"	"							"	2Q	"		"		"		"
		33	"							"	"	-5.2 mA		4.2 V				"	3Q	"		"		"		"
		34	"							"	"				4.2 V		-5.2 mA	"	4Q	"		"		"		"
		35	"		-5.2 mA	1.2 V				"	"							"	$1\overline{Q}$	"		"		"		"
		36	"				1.2 V		-5.2 mA	"	"							"	$2\overline{Q}$	"		"		"		"
		37	"							"	"		-5.2 mA	1.2 V				"	$3\overline{Q}$	"		"		"		"
		38	"							"	"				1.2 V	-5.2 mA		"	$4\overline{Q}$	"		"		"		"

See footnotes at end of table.

TABLE III. Group A inspection for device type 08 - Continued.

Symbol	MIL-STD-883 method	Case 2 Cases E, F	Test no.	Terminal conditions 1/ 2 / 1 CLR	3 / 2 1Q	4 / 3 1$\overline{Q}$	5 / 4 1D	7 / 5 2D	8 / 6 2$\overline{Q}$	9 / 7 2Q	10 / 8 GND	12 / 9 CLK	13 / 10 3Q	14 / 11 3$\overline{Q}$	15 / 12 3D	17 / 13 4D	18 / 14 4$\overline{Q}$	19 / 15 4Q	20 / 16 V_{CC}	Measured terminal	Test limits: Subgroup 1 T_C = +25°C Min	Subgroup 1 Max	Subgroup 2 T_C = +125°C Min	Subgroup 2 Max	Subgroup 3 T_C = -55°C Min	Subgroup 3 Max	Unit
V_{OL3}	3007		39	1.2 V	20 μA						GND								6.0 V	1Q		0.05		0.05		0.05	V
			40	"						20 μA	"								"	2Q		"		"		"	"
			41	"							"		20 μA						"	3Q		"		"		"	"
			42	"							"							20 μA	"	4Q		"		"		"	"
			43	4.2 V		20 μA	4.2 V				"	2/							"	1$\overline{Q}$		"		"		"	"
			44	"				4.2 V	20 μA		"	"							"	2$\overline{Q}$		"		"		"	"
			45	"							"	"		20 μA	4.2 V				"	3$\overline{Q}$		"		"		"	"
			46	"							"	"				4.2 V	20 μA		"	4$\overline{Q}$		"		"		"	"
			47	"	20 μA		1.2 V				"	"							"	1Q		"		"		"	"
			48	"				1.2 V		20 μA	"	"							"	2Q		"		"		"	"
			49	"							"	"	20 μA		1.2 V				"	3Q		"		"		"	"
			50	"							"	"				1.2 V		20 μA	"	4Q		"		"		"	"
V_{OL5}	3007		51	1.2 V	5.2 mA						"								"	1Q		0.26		0.4		0.26	"
			52	"						5.2 mA	"								"	2Q		"		"		"	"
			53	"							"		5.2 mA						"	3Q		"		"		"	"
			54	"							"							5.2 mA	"	4Q		"		"		"	"
			55	4.2 V		5.2 mA	4.2 V				"	2/							"	1$\overline{Q}$		"		"		"	"
			56	"				4.2 V	5.2 mA		"	"							"	2$\overline{Q}$		"		"		"	"
			57	"							"	"		5.2 mA	4.2 V				"	3$\overline{Q}$		"		"		"	"
			58	"							"	"				4.2 V	5.2 mA		"	4$\overline{Q}$		"		"		"	"
			59	"	5.2 mA		1.2 V				"	"							"	1Q		"		"		"	"
			60	"				1.2 V		5.2 mA	"	"							"	2Q		"		"		"	"
			61	"							"	"	5.2 mA		1.2 V				"	3Q		"		"		"	"
			62	"							"	"				1.2 V		5.2 mA	"	4Q		"		"		"	"
I_{OS4}	3011		63	4.0 V	GND		4.0 V				"	3/							4.0 V	1Q	-10	-120	-10	-120	-10	-120	mA
			64	"		GND	GND				"	"							"	1$\overline{Q}$	"	"	"	"	"	"	"
			65	"				4.0 V		GND	"	"							"	2Q	"	"	"	"	"	"	"
			66	"				GND	GND		"	"							"	2$\overline{Q}$	"	"	"	"	"	"	"
			67	"							"	"	GND		4.0 V				"	3Q	"	"	"	"	"	"	"
			68	"							"	"		GND	GND				"	3$\overline{Q}$	"	"	"	"	"	"	"
			69	"							"	"				4.0 V		GND	"	4Q	"	"	"	"	"	"	"
			70	"							"	"				GND	GND		"	4$\overline{Q}$	"	"	"	"	"	"	"
I_{IH}	3010		71	6.0 V							"								6.0 V	$\overline{CLR}$		50		100			nA
			72				6.0 V				"								"	1D		"		"			"
			73					6.0 V			"								"	2D		"		"			"
			74								"	6.0 V							"	CLK		"		"			"
			75								"				6.0 V				"	3D		"		"			"
			76								"					6.0 V			"	4D		"		"			"
I_{IL}	3009		77	GND							"								"	$\overline{CLR}$		-50		-100			"
			78				GND				"								"	1D		"		"			"
			79					GND			"								"	2D		"		"			"
			80								"	GND							"	CLK		"		"			"
			81								"				GND				"	3D		"		"			"
			82								"					GND			"	4D		"		"			"
																					Subgroup 4 T_C = +25°C						
C_I	3012		83	4/							GND								GND	$\overline{CLR}$		10					pF
			84				4/				"								"	1D		"					"
			85					4/			"								"	2D		"					"
			86								"	4/							"	CLK		"					"
			87								"				4/				"	3D		"					"
			88								"					4/			"	4D		"					"

See footnotes at end of table.

TABLE III. Group A inspection for device type 08 - Continued.

Symbol	MIL-STD-883 method	Case 2 Cases E, F Test no.	Terminal conditions 1/ 2 CLR	3 1Q	4 1$\overline{Q}$	5 1D	7 2D	8 2$\overline{Q}$	9 2Q	10 GND	12 CLK	13 3Q	14 3$\overline{Q}$	15 3D	17 4D	18 4$\overline{Q}$	19 4Q	20 V_{CC}	Measured terminal	Test limits: Subgroup 7 T_C = +25°C Min	Subgroup 7 Max	Subgroup 8 T_C = +125°C Min	Subgroup 8 Max	Subgroup 8 T_C = -55°C Min	Subgroup 8 Max	Unit
Truth table tests 6/ 7/	3014	89	B	L	H	A	A	H	L	GND	B	L	H	A	A	H	L	4.5 V	All outputs	5/	5/	5/	5/	5/	5/	
		90	B	L	H	A	A	H	L	"	A	L	H	A	A	H	L	"	"	"	"	"	"	"	"	
		91	B	L	H	A	A	H	L	"	B	L	H	A	A	H	L	"	"	"	"	"	"	"	"	
		92	A	L	H	A	A	H	L	"	B	L	H	A	A	H	L	"	"	"	"	"	"	"	"	
		93	A	H	L	A	A	L	H	"	A	H	L	A	A	L	H	"	"	"	"	"	"	"	"	
		94	A	H	L	A	A	L	H	"	B	H	L	A	A	L	H	"	"	"	"	"	"	"	"	
		95	B	L	H	A	A	H	L	"	B	L	H	A	A	H	L	"	"	"	"	"	"	"	"	
		96	A	L	H	A	A	H	L	"	B	L	H	A	A	H	L	"	"	"	"	"	"	"	"	
		97	A	H	L	A	A	L	H	"	A	H	L	A	A	L	H	"	"	"	"	"	"	"	"	
		98	A	H	L	A	A	L	H	"	B	H	L	A	A	L	H	"	"	"	"	"	"	"	"	
		99	A	H	L	B	B	L	H	"	B	H	L	B	B	L	H	"	"	"	"	"	"	"	"	
		100	A	L	H	B	B	H	L	"	A	L	H	B	B	H	L	"	"	"	"	"	"	"	"	
																				Test limits 8/: Subgroup 9 T_C = +25°C		Subgroup 10 T_C = +125°C		Subgroup 11 T_C = -55°C		
f_{MAX}	(Fig. 4)	101	4.5 V	OUT		IN				GND	IN							4.5 V	1Q	35		26		35		MHz
		102	"		OUT	IN				"	"							"	1$\overline{Q}$	"		"		"		"
		103	"				IN	OUT		"	"							"	2Q	"		"		"		"
		104	"				IN		OUT	"	"							"	2$\overline{Q}$	"		"		"		"
		105	"							"	"	OUT		IN				"	3Q	"		"		"		"
		106	"							"	"		OUT	IN				"	3$\overline{Q}$	"		"		"		"
		107	"							"	"				IN	OUT		"	4Q	"		"		"		"
		108	"							"	"				IN		OUT	"	4$\overline{Q}$	"		"		"		"
t_{PHL1} 7/	3003 (Fig. 4)	109	"	OUT		IN				"	"							"	CLK to 1Q	4	31	4	41	4	31	ns
		110	"				IN		OUT	"	"							"	CLK to 2Q	"	"	"	"	"	"	"
		111	"							"	"	OUT		IN				"	CLK to 3Q	"	"	"	"	"	"	"
		112	"							"	"				IN		OUT	"	CLK to 4Q	"	"	"	"	"	"	"
		113	"		OUT	IN				"	"							"	CLK to 1$\overline{Q}$	"	"	"	"	"	"	"
		114	"				IN	OUT		"	"							"	CLK to 2$\overline{Q}$	"	"	"	"	"	"	"
		115	"							"	"		OUT	IN				"	CLK to 3$\overline{Q}$	"	"	"	"	"	"	"
		116	"							"	"				IN	OUT		"	CLK to 4$\overline{Q}$	"	"	"	"	"	"	"
t_{PLH1} 7/	3003 (Fig. 4)	117	"	OUT		IN				"	"							"	CLK to 1Q	"	"	"	"	"	"	"
		118	"				IN		OUT	"	"							"	CLK to 2Q	"	"	"	"	"	"	"
		119	"							"	"	OUT		IN				"	CLK to 3Q	"	"	"	"	"	"	"
		120	"							"	"				IN		OUT	"	CLK to 4Q	"	"	"	"	"	"	"
		121	"		OUT	IN				"	"							"	CLK to 1$\overline{Q}$	"	"	"	"	"	"	"
		122	"				IN	OUT		"	"							"	CLK to 2$\overline{Q}$	"	"	"	"	"	"	"
		123	"							"	"		OUT	IN				"	CLK to 3$\overline{Q}$	"	"	"	"	"	"	"
		124	"							"	"				IN	OUT		"	CLK to 4$\overline{Q}$	"	"	"	"	"	"	"
t_{PHL2} 7/	3003 (Fig. 4)	125	IN	OUT		4.5 V				"	10/							"	CLK to 1Q	"	32	"	43	"	32	"
		126	"				4.5 V		OUT	"	"							"	CLK to 2Q	"	"	"	"	"	"	"
		127	"							"	"	OUT		4.5 V				"	CLK to 3Q	"	"	"	"	"	"	"
		128	"							"	"				4.5 V		OUT	"	CLK to 4Q	"	"	"	"	"	"	"
t_{PLH2} 7/	3003 (Fig. 4)	129	"		OUT	4.5 V				"	"							"	CLK to 1Q	"	"	"	"	"	"	"
		130	"				4.5 V	OUT		"	"							"	CLK to 2Q	"	"	"	"	"	"	"
		131	"							"	"		OUT	4.5 V				"	CLK to 3Q	"	"	"	"	"	"	"
		132	"							"	"				4.5 V		OUT	"	CLK to 4Q	"	"	"	"	"	"	"

See footnotes at end of table.

TABLE III. Group A inspection for device type 08 - Continued.

Symbol	MIL-STD-883 method	Case 2 / Cases E, F	Test no.	Terminal conditions 1/ 2	3	4	5	7	8	9	10	12	13	14	15	17	18	19	20	Measured terminal	Test limits: Subgroup 1 T_C = +25°C Min	Subgroup 1 Max	Subgroup 2 T_C = +125°C Min	Subgroup 2 Max	Subgroup 3 T_C = -55°C Min	Subgroup 3 Max	Unit
				1	2	3	4	5	6	7	8	9	10	11	12	13	14	15	16								
				$\overline{CLR}$	1Q	1$\overline{Q}$	1D	2D	2$\overline{Q}$	2Q	GND	CLK	3Q	3$\overline{Q}$	3D	4D	4$\overline{Q}$	4Q	V_{CC}								
t_{THL}	3004 (Fig. 4)	133		4.5 V	OUT		IN				GND	IN							4.5 V	1Q	3	15	3	20	3	15	ns
7/		134		"				IN		OUT	"	"							"	2Q	"	"	"	"	"	"	"
		135		"							"	"	OUT		IN				"	3Q	"	"	"	"	"	"	"
		136		"							"	"				IN		OUT	"	4Q	"	"	"	"	"	"	"
		137		"		OUT	IN				"	"							"	1$\overline{Q}$	"	"	"	"	"	"	"
		138		"				IN	OUT		"	"							"	2$\overline{Q}$	"	"	"	"	"	"	"
		139		"							"	"		OUT	IN				"	3$\overline{Q}$	"	"	"	"	"	"	"
		140		"							"	"				IN	OUT		"	4$\overline{Q}$	"	"	"	"	"	"	"
t_{TLH}	3004 (Fig. 4)	141		"	OUT		IN				"	"							"	1Q	"	"	"	"	"	"	"
7/		142		"				IN		OUT	"	"							"	2Q	"	"	"	"	"	"	"
		143		"							"	"	OUT		IN				"	3Q	"	"	"	"	"	"	"
		144		"							"	"				IN		OUT	"	4Q	"	"	"	"	"	"	"
		145		"		OUT	IN				"	"							"	1$\overline{Q}$	"	"	"	"	"	"	"
		146		"				IN	OUT		"	"							"	2$\overline{Q}$	"	"	"	"	"	"	"
		147		"							"	"		OUT	IN				"	3$\overline{Q}$	"	"	"	"	"	"	"
		148		"							"	"				IN	OUT		"	4$\overline{Q}$	"	"	"	"	"	"	"

See footnotes at end of table.

TABLE III. Group A inspection for device type 52.

Symbol	MIL-STD-883 method	Case 2 / Cases C,D	Terminal conditions 1/														Measured terminal	Test limits						Unit
			2 / 1	3 / 2	4 / 3	6 / 4	8 / 5	9 / 6	10 / 7	12 / 8	13 / 9	14 / 10	16 / 11	18 / 12	19 / 13	20 / 14		Subgroup 1 T_C = +25°C		Subgroup 2 T_C = +125°C		Subgroup 3 T_C = -55°C		
		Test no.	1CLR	1D	1CLK	1PRE	1Q	1Q̄	GND	2Q̄	2Q	2PRE	2CLK	2D	2CLR	V_{CC}		Min	Max	Min	Max	Min	Max	
V_{IC} (pos) 1/		1	1 mA						1/							GND	1CLR	1/	1.5					V
		2		1 mA					"							"	1D	"	"					"
		3			1 mA				"							"	1CLK	"	"					"
		4				1 mA			"							"	1PRE	"	"					"
		5							"			1 mA				"	2PRE	"	"					"
		6							"				1 mA			"	2CLK	"	"					"
		7							"					1 mA		"	2D	"	"					"
		8							"						1 mA	"	2CLR	"	"					"
V_{IC} (neg) 1/		9	-1 mA						GND							1/	1CLR		-1.5					"
		10		-1 mA					"							"	1D		"					"
		11			-1 mA				"							"	1CLK		"					"
		12				-1 mA			"							"	1PRE		"					"
		13							"			-1 mA				"	2PRE		"					"
		14							"				-1 mA			"	2CLK		"					"
		15							"					-1 mA		"	2D		"					"
		16							"						-1 mA	"	2CLR		"					"
I_{CC}	3005	17	5.5 V	GND	GND	GND			"			GND	GND	GND	5.5 V	5.5 V	V_{CC}		0.15		15			μA
		18	GND	GND	GND	5.5 V			"			5.5 V	GND	GND	GND	"			0.15		15			μA
I_{CCA}		19	5.5 V	2.4 V	0.8 V	5.5 V			"							"	"		.225		1.5			mA
		20	2.4 V	0.8 V	0.8 V	0.8 V			"							"	"		.225		"			"
		21							"			5.5 V	2.4 V	0.8 V	5.5 V	"	"		.343		"			"
		22							"			2.4 V	0.8 V	0.8 V	0.8 V	"	"		.368		"			"
V_{OH6}	3006	23	2.0 V	0.8 V	0.8 V	0.8 V	-20 μA		"							4.5 V	1Q	4.40		4.40		4.40		V
		24	0.8 V	0.8 V	0.8 V	2.0 V		-20 μA	"							"	1Q̄	"		"		"		"
		25							"	-20 μA		2.0 V	0.8 V	0.8 V	0.8 V	"	2Q̄	"		"		"		"
		26							"		-20 μA	0.8 V	0.8 V	0.8 V	2.0 V	"	2Q	"		"		"		"
		27	2.0 V	2.0 V	2/	2.0 V	-20 μA		"							"	1Q	"		"		"		"
		28	2.0 V	0.8 V	2/	2.0 V		-20 μA	"							"	1Q̄	"		"		"		"
		29							"	-20 μA		2.0 V	2/	0.8 V	2.0 V	"	2Q̄	"		"		"		"
		30							"		-20 μA	2.0 V	2/	2.0 V	2.0 V	"	2Q	"		"		"		"
V_{OH7}	3006	31-38	Same terminal conditions as specified above for V_{OH6} except I_{OH} = -5.2 mA, V_{CC} = 5.5 V.															3.98		3.70		3.98		"
V_{OL6}	3007	39	2.0 V	0.8 V	0.8 V	0.8 V		+20 μA	GND							4.5 V	1Q̄		0.05		0.05		0.05	"
		40	0.8 V	0.8 V	0.8 V	2.0 V	-20 μA		"							"	1Q		"		"		"	"
		41							"		-20 μA	4.2 V	1.2 V	1.2 V	1.2 V	"	2Q		"		"		"	"
		42							"	-20 μA		1.2 V	1.2 V	1.2 V	1.2 V	"	2Q̄		"		"		"	"
		43	2.0 V	2.0 V	2/	2.0 V		+20 μA	"							"	1Q̄		"		"		"	"
		44	2.0 V	0.8 V	2/	2.0 V	-20 μA		"							"	1Q		"		"		"	"
		45							"		-20 μA	4.2 V	2/	1.2 V	1.2 V	"	2Q		"		"		"	"
		46							"	-20 μA		4.2 V	2/	4.2 V	1.2 V	"	2Q		"		"		"	"
V_{OL7}	3007	47-54	Same terminal conditions as specified above for V_{OL6} except I_{OL} = 5.2 mA, V_{CC} = 5.5 V.																0.26		0.4		0.26	"

See footnotes at end of table.

TABLE III. Group A inspection for device type 52 - Continued.

Symbol	MIL-STD-883 method	Case 2 / Cases C,D	Test no.	Terminal conditions 1/ 2 / 1 / 1CLR	3 / 2 / 1D	4 / 3 / 1CLK	6 / 4 / 1PRE	8 / 5 / 1Q	9 / 6 / 1Q̄	10 / 7 / GND	12 / 8 / 2Q̄	13 / 9 / 2Q	14 / 10 / 2PRE	16 / 11 / 2CLK	18 / 12 / 2D	19 / 13 / 2CLR	20 / 14 / V_{CC}	Measured terminal	Test limits: Subgroup 1 T_C = +25°C Min	Subgroup 1 Max	Subgroup 2 T_C = +125°C Min	Subgroup 2 Max	Subgroup 3 T_C = -55°C Min	Subgroup 3 Max	Unit
I_{OS4}	3011		55	4.0 V	GND	GND	GND	GND		GND							4.0 V	1Q	-10	-120	-10	-120	-10	-120	mA
			56	GND	GND	GND	4.0 V		GND	"							"	1Q̄	"	"	"	"	"	"	"
			57							"	GND		4.0 V	GND	GND		"	2Q	"	"	"	"	"	"	"
			58							"		GND	GND	GND	GND	4.0 V	"	2Q̄	"	"	"	"	"	"	"
I_{IH}	3010		59	6.0 V						"							5.5 V	1CLR		.05		0.1			μA
			60		6.0 V					"							"	1D		"		"			"
			61			6.0 V				"							"	1CLK		"		"			"
			62				6.0 V			"							"	1PRE		"		"			"
			63							"			6.0 V				"	2PRE		"		"			"
			64							"				6.0 V			"	2CLK		"		"			"
			65							"					6.0 V		"	2D		"		"			"
			66							"						6.0 V	"	2CLR		"		"			"
I_{IL}	3009		67	GND						"							"	1CLR		-.05		-0.1			"
			68		GND					"							"	1D		"		"			"
			69			GND				"							"	1CLK		"		"			"
			70				GND			"							"	1PRE		"		"			"
			71							"			GND				"	2PRE		"		"			"
			72							"				GND			"	2CLK		"		"			"
			73							"					GND		"	2D		"		"			"
			74							"						GND	"	2CLR		"		"			"
																			Subgroup 4 T_C = +25°C						
C_I	3012		75	4/						GND							GND	1CLR		10					pF
			76		4/					"							"	1D		"					"
			77			4/				"							"	1CLK		"					"
			78				4/			"							"	1PRE		"					"
			79							"			4/				"	2PRE		"					"
			80							"				4/			"	2CLK		"					"
			81							"					4/		"	2D		"					"
			82							"						4/	"	2CLR		"					"
																			Subgroup 7 T_C = +25°C		Subgroup 8 T_C = +125°C		Subgroup 8 T_C = -55°C		
Truth table tests 6/ 7/	3014		83	B	A	B	A	L	H	GND	H	L	A	B	A	B	4.5 V	All outputs	5/	5/	5/	5/	5/	5/	
			84	B	A	A	A	L	H	"	H	L	A	A	A	B	"	"	"	"	"	"	"	"	
			85	B	A	B	A	L	H	"	H	L	A	B	A	B	"	"	"	"	"	"	"	"	
			86	A	A	B	A	L	H	"	H	L	A	B	A	A	"	"	"	"	"	"	"	"	
			87	A	A	B	B	H	L	"	L	H	B	B	A	A	"	"	"	"	"	"	"	"	
			88	A	B	B	B	H	L	"	L	H	B	B	B	A	"	"	"	"	"	"	"	"	
			89	A	B	A	B	H	L	"	L	H	B	A	B	A	"	"	"	"	"	"	"	"	
			90	A	B	B	B	H	L	"	L	H	B	B	B	A	"	"	"	"	"	"	"	"	
			91	A	B	B	A	H	L	"	L	H	A	B	B	A	"	"	"	"	"	"	"	"	
			92	A	B	A	A	L	H	"	H	L	A	A	B	A	"	"	"	"	"	"	"	"	
			93	A	B	B	A	L	H	"	H	L	A	B	B	A	"	"	"	"	"	"	"	"	
			94	A	A	B	A	L	H	"	H	L	A	B	A	A	"	"	"	"	"	"	"	"	
			95	A	A	A	A	H	L	"	L	H	A	A	A	A	"	"	"	"	"	"	"	"	

See footnotes at end of table.

TABLE III. Group A inspection for device type 52 - Continued.

Symbol	MIL-STD-883 method	Case 2 Cases C,D Test no.	Terminal conditions 1/ 2 / 1 1CLR	3 / 2 1D	4 / 3 1CLK	6 / 4 1PRE	8 / 5 1Q	9 / 6 1Q̄	10 / 7 GND	12 / 8 2Q̄	13 / 9 2Q	14 / 10 2PRE	16 / 11 2CLK	18 / 12 2D	19 / 13 2CLR	20 / 14 V_{CC}	Measured terminal	Test limits Subgroup 1 T_C = +25°C Min	Subgroup 1 Max	Subgroup 2 T_C = +125°C Min	Subgroup 2 Max	Subgroup 3 T_C = -55°C Min	Subgroup 3 Max	Unit
f_{MAX} 7/ 9/	(Fig. 4)	96	4.5 V	IN	IN	4.5 V	OUT		GND							4.5 V	1Q	28		21		28		MHz
		97	4.5 V	IN	IN	4.5 V		OUT	"							"	1Q̄	"		"		"		"
		98							"	OUT						"	2Q̄	"		"		"		"
		99							"		OUT	4.5 V	IN	IN	4.5 V	"	2Q	"		"		"		"
t_{PHL1} 7/	3003 (Fig. 4)	100	4.5 V	IN	IN	4.5 V	OUT		"							"	1CLK to 1Q	5	31	5	41	5	31	ns
		101							"		OUT	4.5 V	IN	IN	4.5 V	"	2CLK to 2Q	"	"	"	"	"	"	"
		102	4.5 V	IN	IN	4.5 V		OUT	"							"	1CLK to 1Q̄	"	"	"	"	"	"	"
		103							"	OUT		4.5 V	IN	IN	4.5 V	"	2CLK to 2Q̄	"	"	"	"	"	"	"
t_{PLH1} 7/	3003 (Fig. 4)	104	4.5 V	IN	IN	4.5 V	OUT		"							"	2CLK to 1Q	"	"	"	"	"	"	"
		105							"		OUT	4.5 V	IN	IN	4.5 V	"	2CLK to 2Q	"	"	"	"	"	"	"
		106	4.5 V	IN	IN	4.5 V		OUT	"							"	1CLK to 1Q̄	"	"	"	"	"	"	"
		107							"	OUT		4.5 V	IN	IN	4.5 V	"	2CLK to 2Q̄	"	"	"	"	"	"	"
t_{PHL2} 7/	3003 (Fig. 4)	108	IN	GND	GND	4.5 V	OUT		"							"	1CLR to 1Q	"	35	"	47	"	35	"
		109	4.5 V	GND	GND	IN		OUT	"		OUT	4.5 V	GND	GND	IN	"	1PRE to 1Q	"	"	"	"	"	"	"
		110							"	OUT		IN	GND	GND	4.5 V	"	2CLR to 2Q	"	"	"	"	"	"	"
		111							"		OUT					"	2CLR to 2Q̄	"	"	"	"	"	"	"
t_{PLH2} 7/	3003 (Fig. 4)	112	IN	GND	GND	4.5 V	OUT		"							"	1CLR to 1Q	"	"	"	"	"	"	"
		113	4.5 V	GND	GND	IN		OUT	"							"	1PRE to 1Q̄	"	"	"	"	"	"	"
		114							"	OUT		4.5 V	GND	GND	IN	"	2CLR to 2Q	"	"	"	"	"	"	"
		115							"		OUT	IN	GND	GND	4.5 V	"	2CLR to 2Q̄	"	"	"	"	"	"	"
t_{THL} 7/	3004 (Fig. 4)	116	IN	GND	GND	4.5 V	OUT		"							"	1Q	3	15	3	20	3	15	"
		117	4.5 V	GND	GND	IN		OUT	"							"	1Q̄	"	"	"	"	"	"	"
		118							"	OUT		IN	GND	GND	4.5 V	"	2Q̄	"	"	"	"	"	"	"
		119							"		OUT	4.5 V	GND	GND	IN	"	2Q	"	"	"	"	"	"	"
t_{TLH} 7/	3004 (Fig. 4)	120	4.5 V	GND	GND	IN	OUT	OUT	"							"	1Q	"	"	"	"	"	"	"
		121	IN	GND	GND	4.5 V			"							"	1Q̄	"	"	"	"	"	"	"
		122							"	OUT		4.5 V	GND	GND	IN	"	2Q̄	"	"	"	"	"	"	"
		123							"		OUT	IN	GND	GND	4.5 V	"	2Q	"	"	"	"	"	"	"

1/ Pins not designated may be high level logic, low level logic, or open. Exceptions are as follows:
a. V_{IC} (pos) tests, the GND terminal shall be open. For test equipment that does not allow GND pin to be open during test, a minimum limit of 0.4 V applies.
b. V_{IC} (neg) tests, the V_{CC} terminal shall be open.
c. I_{IC} tests, the output terminals shall be open

2/ Apply one clock pulse prior to test as follows:

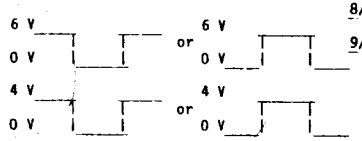

as appropriate.

3/ Apply one clock pulse prior to test as follows:

as appropriate.

4/ See 4.4.1c.

5/ A = 3.7 V, B = 0.4 V for all device types (except 52 where A = 2.4 V); H > 2.5 V, L < 2.5 V.

6/ Only a summary of attributes data is required.

7/ Apply input test parameters such that t_{su}, t_{hold}, t_{rem}, and t_w values are not greater than the recommended operating minimums (see 1.4). Preset outputs to required state if necessary, prior to test.

8/ See 4.4.1d.

9/ The f_{MAX}, minimum limit specified is the frequency of the clock input.

The data input is $\frac{f_{MAX}}{2}$.

10/ Apply one pulse prior to test as follows:

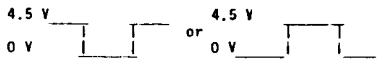

as appropriate.

11/ Three-state output conditions are required.

4.4.3 Group C inspection. Group C inspection shall be in accordance with table III of method 5005 of MIL-STD-883 and as follows:

a. End-point electrical parameters shall be as specified in table II herein. Delta limits shall apply only to subgroup 1 of group C inspection and shall consist of tests specified in table IV herein.

b. Steady-state life test (method 1005 of MIL-STD-883) conditions:

(1) Test condition D and as specified in 4.5.2 herein and as shown on figure 3 (note 3), or equivalent.

(2) T_A = +125°C minimum.

(3) Test duration, 1,000 hours, except as permitted by method 1005 of MIL-STD-883.

4.4.4 Group D inspection. Group D inspection shall be in accordance with table IV of method 5005 of MIL-STD-883. End-point electrical parameters shall be as specified in table II herein.

4.4.5 Group E inspection. Group E inspection is required only for device types intended to be marked as radiation hardened (see 3.6.1). When group E testing is performed, it shall be in accordance with table V of method 5005 of MIL-STD-883.

4.5 Methods of inspection. Methods of inspection shall be specified as follows:

4.5.1 Voltage and current. Unless otherwise specified, all voltages given are referenced to the microcircuit GND terminal. Currents given are conventional current and positive when flowing into the referenced terminal.

4.5.2 Burn-in and life test cool down procedures. When the burn-in and life tests are completed and prior to removal of bias voltages, the devices under test (DUT) shall be cooled to within 10°C of their power stable condition at room temperature; then, electrical parameter end-point measurements shall be performed.

TABLE IV. Delta limits at 25°C.

Parameter 1/	Device types	
	All	
I_{CC}		±30 nA

1/ The above parameter shall be recorded before and after the required burn-in and life tests to determine deltas (Δ).

4.5.3 Quiescent supply current (I_{CC} test). When performing quiescent supply current measurements (I_{CC}), the meter shall be placed so that all currents flow through the meter.

4.6 Data reporting. When specified in the purchase order or contract, a copy of the following data, as applicable, shall be supplied.

a. Attributes data for all screening tests (see 4.4) and variables data for all static burn-in, dynamic burn-in, and steady-state life tests (see 3.5).

b. A copy of each radiograph.

c. The quality conformance inspection data (see 4.4).

d. Parameter distribution data on parameters evaluated during burn-in (see 3.5).

e. Final electrical parameters data (see 4.2c).

5. PACKAGING

5.1 Packaging requirements. The requirements for packaging shall be in accordance with MIL-M-38510.

6. NOTES

6.1 Intended use. Microcircuits conforming to this specification are intended for original equipment design application and logistic support of existing equipment.

6.2 Ordering data. The acquisition document should specify the following:

a. Complete part number (see 1.2).

b. Requirements for delivery of one copy of the quality conformance inspection data pertinent to the device inspection lot to be supplied with each shipment by the device manufacturer, if applicable.

c. Requirements for certificate of compliance, if applicable.

d. Requirements for notification of change of product or process to the contracting activity in addition to notification to the qualifying activity, if applicable.

e. Requirements for failure analysis (including required test condition of method 5003 of MIL-STD-883), corrective action and reporting of results, if applicable.

f. Requirements for product assurance options.

g. Requirements for special carriers, lead lengths, or lead forming, if applicable. These requirements shall not affect the part number. Unless otherwise specified, these requirements shall not apply to direct purchase by, or direct shipment to the Government.

h. Requirements for "JAN" marking.

i. Requirements for total dose radiation testing (see 3.6.1), if applicable.

6.3 Abbreviations, symbols, and definitions. The abbreviations, symbols, and definitions used herein are defined in MIL-M-38510, MIL-STD-883, and as follows:

C_I - - - - - - - - - - - - - -	Input terminal-to-GND capacitance.
GND - - - - - - - - - - - - - -	Ground zero voltage potential.
I_{CC} - - - - - - - - - - - - - -	Quiescent supply current.
T_A - - - - - - - - - - - - - -	Free air temperature.
V_{CC} - - - - - - - - - - - - - -	Positive supply voltage.

6.4 Logistic support. Lead materials and finishes (see 3.3) are interchangeable. Unless otherwise specified, microcircuits acquired for Government logistic support will be acquired to device class S for National Aeronautics and Space Administration or class B for Department of Defense (see 1.2.2), lead finish C (see 3.3). Longer length leads and lead forming shall not affect the part number.

6.5 Substitutability. The cross-reference information below is presented for the convenience of users. Microcircuits covered by this specification will functionally replace the listed generic-industry type. Generic-industry microcircuit types may not have equivalent operational performance characteristics across military temperature ranges or reliability factors equivalent to MIL-M-38510 device types and may have slight physical variations in relation to case size. The presence of this information shall not be deemed as permitting substitution of generic-industry types for MIL-M-38510 types or as a waiver of any of the provisions of MIL-M-38510.

Military device type	Generic-industry type
01	54HC73
02	54HC74
03	54HC107
04	54HC109
05	54HC112
06	54HC173
07	54HC174
08	54HC175
52	54HCT74

6.6 Handling. MOS devices must be handled with certain precautions to avoid damage due to accumulation of static charge. Input protective devices have been designed in the chip to minimize the effect of this static build up. However, the following handling practices are recommended:

a. Devices should be handled on benches with conductive and grounded surface.

b. Ground test equipment and tools.

c. Do not handle devices by the leads.

d. Store devices in conductive foam or carriers.

e. Avoid use of plastic, rubber, or silk in MOS areas.

f. Maintain relative humidity above 50 percent, if practical.

Custodians:
Army - ER
Navy - EC
Air Force - 17
NASA - NA

Review activities:
Army - AR, MI
Air Force - 11, 19, 85, 99
DLA - ES

User activities:
Army - SM
Navy - AS, CG, OC, MC, SH

Preparing activity:
Air Force - 17

Agent:
DLA - ES

(Project 5962-1038)