MILITARY SPECIFICATION

MICROCIRCUITS, DIGITAL, HIGH SPEED, CMOS, BUS TRANSCEIVERS WITH THREE-STATE OUTPUTS, MONOLITHIC SILICON

This specification is approved for use by all Departments and Agencies of the Department of Defense.

1. SCOPE

1.1 Scope. This specification covers the detail requirements for monolithic silicon, high speed, CMOS, logic microcircuits. Two product assurance classes and a choice of case outlines and lead finishes are provided and are reflected in the complete part number.

1.2 Part number. The part number shall be in accordance with MIL-M-38510, and as specified herein.

1.2.1 Device type. The device types shall be as follows:

Device type	Circuit
01	Quadruple inverting bus transceivers with three-state outputs
02	Quadruple non-inverting bus transceivers with three-state outputs
03	Octal non-inverting bus transceivers with three-state outputs
04, 05	To be included later
06	Octal inverting bus transceivers with three-state outputs
07	Octal non-inverting or inverting bus transceivers with three-state outputs
08	Octal non-inverting bus transceivers with three-state outputs
09	Octal inverting bus transceivers with three-state outputs
53	Octal non-inverting bus transceivers with three-state outputs and TTL-input voltage compatibility

1.2.2 Device class. The device class shall be the product assurance level as defined in MIL-M-38510.

1.2.3 Case outlines. The case outlines shall be designated as follows:

Outline letter	Case outline (see MIL-M-38510, appendix C)
C	D-1 (14-lead, 1/4" x 3/4"), dual-in-line package
L	D-9 (24-lead, 1/4" x 1 1/4"), dual-in-line package
R	D-8 (20-lead, 1/4" x 1 1/16"), dual-in-line package
2	C-2 (20-terminal, .350" x .350") square chip carrier package
3	C-4 (28-terminal, .450" x .450"), square chip carrier package

Beneficial comments (recommendations, additions, deletions) and any pertinent data which may be of use in improving this document should be addressed to: Rome Air Development Center (RBE-2), Griffiss AFB, NY 13441, by using the self-addressed Standardization Document Improvement Proposal (DD Form 1426) appearing at the end of this document or by letter.

AMSC N/A FSC 5962
DISTRIBUTION STATEMENT A. Approved for public release; distribution is unlimited.

1.3 Absolute maximum ratings.

Supply voltage (V_{CC})	-0.5 V dc +7.0 V dc
DC input voltage (V_{IN})	-0.5 V dc to V_{CC} +0.5 V dc
DC output voltage (V_{OUT})	-0.5 V dc to V_{CC} +0.5 V dc
Clamp diode current (I_{IK}, I_{OK})	±20 mA
DC output current per pin (I_{OUT})	±35 mA
DC V_{CC} or GND current per pin (I_{OC})	±70 mA
Storage temperature range (T_{STG})	-65°C to +150°C
Maximum power dissipation (P_D)	300 mW
Lead temperature (soldering, 10 seconds)	+300°C
Thermal resistance, junction-to-case (θ_{JC}):	
Cases C, L, and R	(See MIL-M-38510, appendix C)
Case 2	60°C/W
Case 3	TBD
Junction temperature (T_J)	+175°C

1.4 Recommended operating conditions.

Device types 01, 02, 03, 06, 07, 08, 09:

Input low (V_{IL}) maximum voltage	0.3 V at V_{CC} = 2 V 0.9 V at V_{CC} = 4.5 V 1.2 V at V_{CC} = 6 V
Input high (V_{IH}) minimum voltage	1.5 V at V_{CC} = 3 V 3.15 V at V_{CC} = 4.5 V 4.2 V at V_{CC} = 6 V
Operating ambient temperature range T_A	-55°C to +125°C
Width of clock pulse (t_{CLK}):	
Device types 08 and 09	27 ns minimum
Setup time before clock (t_{setup}):	
Device types 08 and 09	30 ns minimum
Hold time (t_{hold}):	
Device types 08 and 09	8 ns minimum
Supply voltage (V_{CC})	2 V dc to 6 V dc
Output voltage	0 V dc to V_{CC}

Input rise and fall times (t_r, t_f) maximum:

V_{CC} = 2 V	1000 ns
V_{CC} = 4.5 V	500 ns
V_{CC} = 6 V	400 ns

Device type 53:

Input low (V_{IL}) maximum voltage	0.8 V at V_{CC} = 4.5 V - 5.5 V
Input high (V_{IH}) minimum voltage	2.0 V at V_{CC} = 4.5 V - 5.5 V
Supply voltage (V_{CC})	4.5 V dc to 5.5 V dc
Output voltage	0 V dc to V_{CC}
Operating ambient temperature T_A	-55°C to +125°C

Input rise and fall times (t_r, t_f):

V_{CC} = 4.5 V 500 ns maximum

2. APPLICABLE DOCUMENTS

2.1 Government specification and standard. Unless otherwise specified, the following specification and standard, of the issue listed in that issue of the Department of Defense Index of Specifications and Standards specified in the solicitation, form a part of this specification to the extent specified herein.

SPECIFICATION

MILITARY

MIL-M-38510 - Microcircuits, General Specification for.

STANDARD

MILITARY

MIL-STD-883 - Test Methods and Procedures for Microelectronics.

(Copies of the specification and standard required by manufacturers in connection with specific acquisition functions should be obtained from the contracting activity or as directed by the contracting activity.)

2.2 Order of precedence. In the event of a conflict between the text of this specification and the references cited herein (except for associated detail specifications, specification sheets or MS standards), the text of this specification shall take precedence. Nothing in this specification, however, shall supersede applicable laws and regulations unless a specific exemption has been obtained.

3. REQUIREMENTS

3.1 Detail specification. The individual item requirements shall be in accordance with MIL-M-38510, and as specified herein.

3.2 Design, construction, and physical dimensions. The design, construction, and physical dimensions shall be as specified in MIL-M-38510 and herein.

3.2.1 Logic diagrams and terminal connections. The logic diagrams and terminal connections shall be as specified on figure 1.

3.2.2 Truth tables and logic equations. The truth tables shall be as specified on figure 2.

3.2.3 Schematic circuits. The schematic circuits shall be submitted to the preparing activity prior to inclusion of a manufacturer's device in this specification and shall be submitted to the qualifying activity as a prerequisite for qualification. All qualified manufacturers' schematics shall be maintained and available upon request.

3.3 Lead material and finish. The lead material and finish shall be in accordance with MIL-M-38510 and 6.4 herein.

3.4 Electrical performance characteristics. Unless otherwise specified, the electrical performance characteristics are as specified in table I, and apply over the full recommended operating ambient temperature range.

3.5 Electrical test requirements. The electrical test requirements for each device class shall be the subgroups specified in table II. The electrical tests for each subgroup are described in table III.

3.6 Marking. Marking shall be in accordance with MIL-M-38510. At the option of the manufacturer, marking of the country of origin may be omitted from the body of the microcircuit, but shall be retained on the initial container.

3.6.1. Total dose radiation hardness identifier. Total dose radiation hardness identifier shall be in accordance with MIL-M-38510 and 4.5.4 herein.

3.6.2 Serialization. All class S devices shall be serialized in accordance with MIL-M-38510.

3.6.3 Correctness of indexing and marking. All devices shall be subjected to the final electrical tests specified in table II after part number marking to verify that they are correctly indexed and identified by part number. Optionally, an approved electrical test may be devised especially for this requirement.

3.7 Microcircuit group assignment. The devices covered by this specification shall be in microcircuit group number 37 (see MIL-M-38510, appendix E).

4. QUALITY ASSURANCE PROVISIONS

4.1 Sampling and inspection. Sampling and inspection procedures shall be in accordance with MIL-M-38510 and methods 5005 and 5007, as applicable, of MIL-STD-883, except as modified herein.

4.2 Screening. Screening shall be in accordance with method 5004 of MIL-STD-883, and shall be conducted on all devices prior to qualification and quality conformance inspection. The following additional criteria shall apply:

a. Delete the sequence specified in 3.1.10 through 3.1.14 of method 5004 and substitute lines 1 through 7 of table II herein.

b. Burn-in (method 1015 of MIL-STD-883).

(1) Static tests (test condition A) using circuit shown on figure 3, or equivalent. Ambient temperature (T_A) shall be +125°C minimum. Test duration for each static test shall be 24 hours minimum for class S devices and in accordance with table I of method 1015 for class B devices.

(2) Dynamic test (test condition D) using circuit shown on figure 3, or equivalent. Ambient temperature shall be +125°C minimum. Test duration shall be in accordance with table I of method 1015.

c. Interim and final electrical parameters shall be as specified in table II herein.

d. For class S devices, post dynamic burn-in, or class B devices, post static burn-in, electrical parameter measurements may, at the manufacturer's option, be performed separately or included in the final electrical parameter requirements.

4.2.1 Percent defective allowable (PDA).

a. The PDA for class S devices shall be 5 percent for static burn-in and 5 percent for dynamic burn-in, based on the exact number of devices submitted to each separate burn-in.

b. Static burn-in I and II failures shall be cumulative for determining the PDA.

c. The PDA for class B devices shall be in accordance with MIL-M-38510 for static burn-in. Dynamic burn-in is not required.

d. Those devices whose measured characteristics, after burn-in, exceed the specified delta (Δ) limits or electrical parameter limits specified in table III, subgroup 1, are defective and shall be removed from the lot. The verified failures divided by the total number of devices in the lot initially submitted to burn-in shall be used to determine the percent defective for the lot and the lot shall be accepted or rejected based on the specified PDA.

4.3 Qualification inspection. Qualification inspection shall be in accordance with MIL-M-38510. Inspections to be performed shall be those specified in method 5005 of MIL-STD-883 and herein for groups A, B, C, D, and E inspections (see 4.4.1 through 4.4.5).

4.4 Quality conformance inspection. Quality conformance inspection shall be in accordance with MIL-M-38510 and as specified herein. Inspections to be performed shall be those specified in method 5005 of MIL-STD-883 and herein for groups A, B, C, D, and E inspections (see 4.4.1 through 4.4.5).

4.4.1 Group A inspection. Group A inspection shall be in accordance with table I of method 5005 of MIL-STD-883 and as follows:

a. Tests shall be performed in accordance with table II herein.

b. Subgroups 5, 6, 7, and 8 of table I of method 5005 of MIL-STD-883 shall be omitted.

c. Subgroup 4 (C_I measurement) shall be measured only for initial qualification and after process or design changes which may affect input capacitance. Capacitance shall be measured between the designated terminal and V_{SS} at a frequency of 1 MHz.

d. Subgroups 9 and 11 shall be measured only for initial qualification and after process or design changes which may affect dynamic performance.

4.4.2 Group B inspection. Group B inspection shall be in accordance with table II of method 5005 of MIL-STD-883 and as follows:

a. Class S steady-state life test circuits shall be submitted to the qualifying activity for approval. When the alternate steady-state life test is used, the circuit on figure 3, or equivalent, shall be used.

b. Electrostatic Discharge Sensitivity (ESDS) testing shall be performed in accordance with MIL-STD-883, method 3015. The option to categorize devices as ESD sensitive without performing the test is not allowed. Device types categorized as ESD sensitive shall be further tested using method 3015 modified as follows:

(1) Table I pin combinations 4 and 5 shall be deleted.

(2) The test sequence specified in paragraph 3.b shall be repeated an additional four times rather than the two specified.

(3) Only those device types that pass ESDS testing at 1,000 volts or greater shall be considered as conforming to the requirements of this specification.

c. End-point electrical parameters shall be as specified in table II herein. Delta limits shall apply only to subgroup 5 of group B inspections and shall consist of tests specified in table IV herein.

4.4.3 Group C inspection. Group C inspection shall be in accordance with table III of method 5005 of MIL-STD-883 and as follows:

a. End-point electrical parameters shall be as specified in table II herein. Delta limits shall apply only to subgroup 1 of group C inspection and shall consist of tests specified in table IV herein.

b. Steady-state life test (method 1005 of MIL-STD-883) conditions:

(1) Test condition D and as specified in 4.5.2 herein and as shown on figure 3 (note 3), or equivalent.

(2) T_A = +125°C minimum.

(3) Test duration, 1,000 hours, except as permitted by method 1005 of MIL-STD-883.

Text continues on page 77.

TABLE I. Electrical performance characteristics.

Test	Symbol	Conditions 1/ T_C = +125°C unless otherwise specified	Device type 2/	V_{CC}	Limits Min	Limits Max	Unit
High-level output voltage	V_{OH1} 3/	V_{IH} = 1.5 V V_{IL} = 0.3 V I_{OH} = -20 µA	01-09	2.0 V	1.95	---	V
	V_{OH2} 3/	V_{IH} = 3.15 V V_{IL} = 0.9 V I_{OH} = -20 µA	01-09	4.5 V	4.44	---	V
	V_{OH3}	V_{IH} = 4.2 V V_{IL} = 1.2 V I_{OH} = -20 µA	01-09	6.0 V	5.95	---	V
	V_{OH4} 3/	V_{IH} = 3.15 V V_{IL} = 0.9 V I_{OH} = -6.0 mA	01-09	4.5 V	3.7	---	V
	V_{OH5}	V_{IH} = 4.2 V V_{IL} = 1.2 V I_{OH} = -7.8 mA	01-09	6.0 V	5.2	---	V
	V_{OH6}	V_{IH} = 2.0 V V_{IL} = 0.8 V I_{OH} = -20 µA	53	4.5 V	4.4	---	V
	V_{OH7}	V_{IH} = 2.0 V V_{IL} = 0.8 V I_{OH} = -6.0 mA	53	5.5 V	3.7	---	V
Low-level output voltage	V_{OL1} 3/	V_{IL} = 0.8 V V_{IH} = 1.5 V I_{OL} = 20 µA	01-09	2.0 V	---	0.05	V
	V_{OL2} 3/	V_{IL} = 0.9 V V_{IH} = 3.15 V I_{OL} = 20 µA	01-09	4.5 V	---	0.05	V
	V_{OL3}	V_{IL} = 1.2 V V_{IH} = 4.2 V I_{OL} = 20 µA	01-09	6.0 V	---	0.05	V
	V_{OL4} 3/	V_{IL} = 0.9 V V_{IH} = 3.15 V I_{OL} = +6.0 mA	01-09	4.5 V	---	0.4	V
	V_{OL5}	V_{IL} = 1.2 V V_{IH} = 4.2 V I_{OL} = 7.8 mA	01-09	6.0 V	---	0.4	V

See footnotes at end of table.

TABLE I. Electrical performance characteristics - Continued.

Test	Symbol	Conditions 1/ T_C = +125°C unless otherwise specified	Device type 2/	V_{CC}	Limits Min	Limits Max	Unit
Low-level output voltage	V_{OL6}	V_{IH} = 2.0 V V_{IL} = 0.8 V I_{OH} = +20 µA	53	4.5 V	---	0.05	V
	V_{OL7}	V_{IH} = 2.0 V V_{IL} = 0.8 V I_{OH} = +6.0 mA	53	5.5 V	---	0.4	V
Positive input clamp voltage	V_{IC+}	V_{CC} = GND I_{IN} = +1 mA T_C = +25°C	All	---	8/	+1.5	V
Negative input clamp voltage	V_{IC-}	V_{CC} = Open I_{IN} = -1 mA T_C = +25°C	All	---	---	-1.5	V
Control input current low	I_{IL}	V_{IN} = GND	01-09	6.0 V	---	-0.1	µA
			53	5.5 V		-0.1	µA
Control input current high	I_{IH}	V_{IN} = V_{CC}	01-09	6.0 V	---	0.1	µA
			53	5.5 V		0.1	µA
Input/output current, low-level, outputs disabled	I_{IL}/ I_{OZL} 4/	V_{IN} control = 4.2 V or 1.2 V V_{OUT} = GND	01-09	6.0 V	---	-2.0	µA
		V_{IN} control = 2.0 V or 0.8 V V_{OUT} = GND	53	5.5 V	---	-2.0	µA
Input/output current, high-level, outputs disabled	I_{IH}/ I_{OZH} 4/	V_{IN} control = 4.2 V or 1.2 V V_{OUT} = 6 V	01-09	6.0 V	---	2.0	µA
		V_{IN} control = 2.0 V or 0.8 V V_{OUT} = 5.5 V	53	5.5 V	---	2.0	µA
Short circuit output current	I_{OS1} 3/	T_C = -55°C to +125°C V_O = GND V_I = GND or V_{CC}	01-09	2.0 V	-2	-60	mA
	I_{OS2} 3/		All	4.5 V	-15	-165	
	I_{OS3} 3/		01-09	6.0 V	-25	-210	
	I_{OS4}		All	4.0 V	-10	-135	
	I_{OS5} 3/		53	5.5 V	-25	-210	

See footnotes at end of table.

TABLE I. Electrical performance characteristics - Continued.

Test	Symbol	Conditions 1/ T_C = +125°C unless otherwise specified	Device type 2/	V_{CC}	Limits Min	Limits Max	Unit
Supply current quiescent	I_{CC}	V_I = 6.0 V	01,02, 03,06,07, 08,09	6.0 V	---	20	µA
			53	5.5 V	---	20	µA
	I_{CCZ}	V_I = 6.0 V	01,02 03,06,07, 08,09	6.0 V	---	10	µA
			53	5.5 V	---	10	µA
Additional supply current quiescent per input pin (one unit load)	$I_{CC\Delta}$ 9/	V_{IL} = 0.8 V V_{IH} = 2.4 V Test pin at V_{IN} = 2.4 V Other pins at 0.8 V or 5.5 V I_o = 0 V	53	5.5 V		1.5	mA
Maximum clock frequency	f_{MAX}	V_I = 0-V_{CC}, 50% DC C_L = 50 pF ±10% 5/	08,09	4.5 V	23	---	MHz
Control capacitance	C_C	T_C = +25°C	All		---	10	pF
Input/output capacitance	$C_{I/O}$	T_C = +25°C	All		---	20	pF
Power dissipation capacitance	C_{PD} 2/ 3/	T_C = +25°C	01,02, 03,53,		--- ---	70	pF
			04,05,		---	40	
			06,07,		---	120	
			08,09		---	55	
Transition delay times 6/, 7/	t_{THL}, t_{TLH}	V_{CC} = 4.5 V C_L = 50 pF ±10%	All	4.5 V	2	16	ns
Propagation delay time, clock to bus	t_{PLH1}, t_{PHL1}		08	4.5 V	8	51	ns
			09	4.5 V	8	56	ns
Propagation delay time, bus to bus	t_{PLH2}, t_{PHL2}		01,	4.5 V	3	23	ns
			02,	4.5 V	4	23	ns
			03,53	4.5 V	4	33	ns
			06,07,	4.5 V	4	26	ns
			08,09	4.5 V	5	40	ns
Propagation delay time, select (with bus input high) to bus	t_{PLH3}, t_{PHL3}		08,09	4.5 V	10	51	ns

See footnotes at end of table.

TABLE I. Electrical performance characteristics - Continued.

Test	Symbol	Conditions 1/ T_C = +125°C unless otherwise specified	Device type 2/	V_{CC}	Limits Min	Limits Max	Unit
Propagation delay time, select (with bus input low) to bus	t_{PLH4}, t_{PHL4}	V_{CC} = 4.5 V C_L = 50 pF ±10%	08,09	4.5 V	10	51	ns
Propagation delay time, disabled-to-high level output	t_{PZH1}	V_{CC} = 4.5 V C_L = 50 pF ±10% R_L = 1 kΩ ±5% 6/, 7/	01	4.5 V	4	35	ns
			02	4.5 V	4	36	ns
			03	4.5 V	9	59	ns
			53	4.5 V	6	54	ns
Propagation delay time, disabled-to-high level output, enable to bus	t_{PZH2}		06,07,	4.5 V	9	59	ns
			08,09	4.5 V	6	57	ns
Propagation delay time, disabled-to-high level output direction to bus	t_{PZH3}		08,09	4.5 V	6	57	ns
Propagation delay time, disabled-to-low level output	t_{PZL1}		01	4.5 V	4	35	ns
			02	4.5 V	4	36	ns
			03	4.5 V	9	59	ns
			53	4.5 V	6	54	ns
Propagation delay time, disabled-to-low level, output enable to bus	t_{PZL2}		06,07,	4.5 V	9	59	ns
			08,09	4.5 V	6	57	ns
Propagation delay time, disabled-to-low level, direction to bus	t_{PZL3}		08,09	4.5 V	6	57	ns
Propagation delay time, high-level to disabled output	t_{PHZ1}		01	4.5 V	4	40	ns
			02	4.5 V	4	42	ns
			03	4.5 V	8	54	ns
			53	4.5 V	6	54	ns
Propagation delay time, high-level-to-disabled output enable to bus	t_{PHZ2}		06,07,	4.5 V	8	53	ns
			08,09	4.5 V	6	57	ns
Propagation delay time, high-level-to-disabled, output direction to bus	t_{PHZ3}		08,09	4.5 V	6	57	ns
Propagation delay time, low-level-to-disabled output	t_{PLZ1}		01	4.5 V	4	40	ns
			02	4.5 V	4	42	ns
			03	4.5 V	8	54	ns
			53	4.5 V	6	54	ns

See footnotes at end of table.

TABLE I. Electrical performance characteristics - Continued.

Test	Symbol	Conditions 1/ T_C = +125°C unless otherwise specified	Device type 2/	V_{CC}	Limits Min	Limits Max	Unit
Propagation delay time, low-level-to-disabled output, enable to bus	t_{PLZ2}	V_{CC} = 4.5 V C_L = 50 pF ±10% R_L = 1 kΩ ±5% 6/, 7/	06,07,	4.5 V	8	53	ns
			08,09	4.5 V	6	57	ns
Propagation delay time, low-level-to-disabled output, direction to bus	t_{PLZ3}		08,09	4.5 V	6	57	ns

1/ Complete terminal conditions shall be as specified in table III.

2/ Power dissipation capacitance (C_{PD}) typically per transceiver.

3/ Guaranteed but not tested.

4/ I_{OZL} = output set to high state. Three state output conditions are required.
I_{OZH} = output set to low state. Three state output conditions are required.

5/ Tested at V_{CC} = 4.5 V at +125°C for sample testing and V_{CC} = 4.5 V at +25°C for screening. Guaranteed at other V_{CC} voltages and temperatures, see table IB and exception in 4.4.1d.

6/ Tested at V_{CC} = 4.5 V at +125°C for sample testing and V_{CC} = 4.5 V at +25°C for screening. Guaranteed at other V_{CC} voltages and temperatures, see table IA and exception in 4.4.1d.

7/ For propagation and transition delay times at V_{CC} = 2.0 V, increase limit by a factor of 5. For propagation and transition delay times at V_{CC} = 6.0 V, decrease limit by a factor of .85.

8/ A minimum limit of 0.4 V applies only when test equipment limitations do not allow the GND pin to be open during testing.

9/ Total supply current = I_{CC} + $I_{CC\Delta}$.

TABLE IA. Calculated dynamic figures at -55/+25 ambient temperature (°C).

V_{CC}	T_A = (°C)	
	+125	-55/+25
2.0 V	5X	5Y
4.5 V	X = 1	0.75X = Y
6.0 V	0.85X	0.85Y

Normalized numbers
(+125°C equals 1)

NOTE: The 2.0 V and 6.0 V numbers are derived from their 4.5 V integer value. Rounding off according 5/4.

TABLE IB. Calculated formula for f_{MAX} at -55/+25 ambient temperature.

V_{CC}	T_A = (°C)	
	+125	-55/+25
2.0 V	0.2X	0.2Y
4.5 V	X = 1	1.33X = Y
6.0 V	1.18X	1.18Y

Normalized numbers
(+125°C equals 1)

NOTE: The 2.0 V and 6.0 V numbers are derived from their 4.5 V integer value. Rounding off according 5/4.

TABLE II. Burn-in and electrical test requirements.

Line no.	Applicable tests and MIL-STD-883 test method	Class S device 1/				Class B device 1/			
		Ref. paragraph	Table III subgroups 2/	Table IV delta limits 3/	Test circuit figure	Ref. paragraph	Table III subgroups 2/	Table IV delta limits 3/	Test circuit figure
1	Interim electrical parameters (method 5004)		1				1		
2	Static burn-in I (method 1015)	4.2b 4.5.2	Req'd		3		Not req'd		
3	Same as line 1		1	Δ					
4	Static burn-in II (method 1015)	4.2b 4.5.2	Req'd		3	4.2b 4.5.2	4/ Req'd		3
5	Same as line 1	4.2d	1*	Δ		4.2d	1* 4/	Δ	
6	Dynamic burn-in (method 1015)	4.2b 4.5.2	Req'd		1/		Not req'd		
7	Same line 1	4.2d	1	Δ					
8	Final electrical parameters (method 5004)		1*,2,3, 7,8,9				1*,2,7,9 4/		
9	Group A test requirements (method 5005)	4.4.1	1,2,3,4, 7,8,9, 10,11			4.4.1	1,2,3,4, 7,8,9, 10,11		
10	Group B end-point electrical parameters (method 5005)	4.4.2	1,2,3,9, 10,11 5/	Δ			1 5/		
11	Group C end-point electrical parameters (method 5005)					4.4.3	1,2	Δ	
12	Group D end-point electrical parameters (method 5005)	4.4.4	1,2,3			4.4.4	1,2		

1/ Blank spaces indicate tests are not applicable.

2/ * indicates PDA applies to subgroup 1 (see 4.2.1).

3/ Δ indicates delta limit shall be required only on table III subgroup 1, where specified, and the delta values shall be computed with reference to the previous interim electrical parameters (line 1).

4/ The device manufacturer may at his option either complete subgroup 1 electrical parameter measurements, including delta measurements, within 96 hours after burn-in completion (removal of bias); or may complete subgroup 1 electrical measurements without delta measurements within 24 hours after burn-in completion (removal of bias).

5/ indicates also applies to electrostatic discharge sensitivity tests.

Device types 01 and 02
Case C

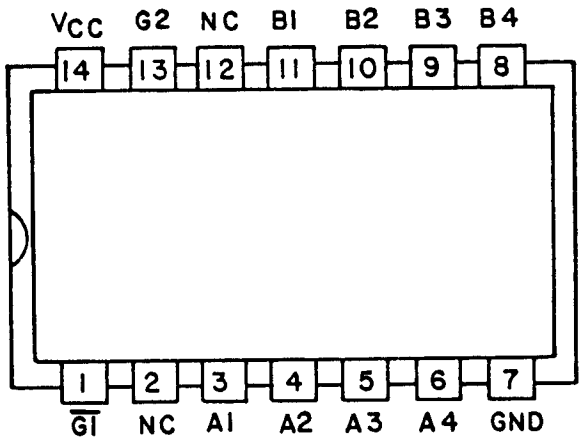

Device types 01 and 02
Case 2

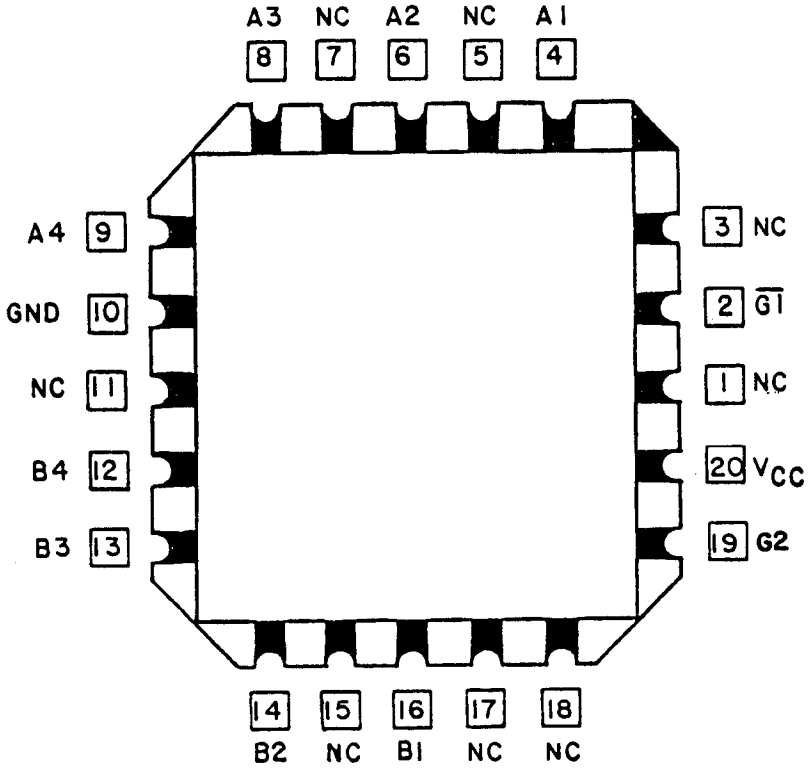

FIGURE 1. Logic diagrams and terminal connections (top view).

Device type 01

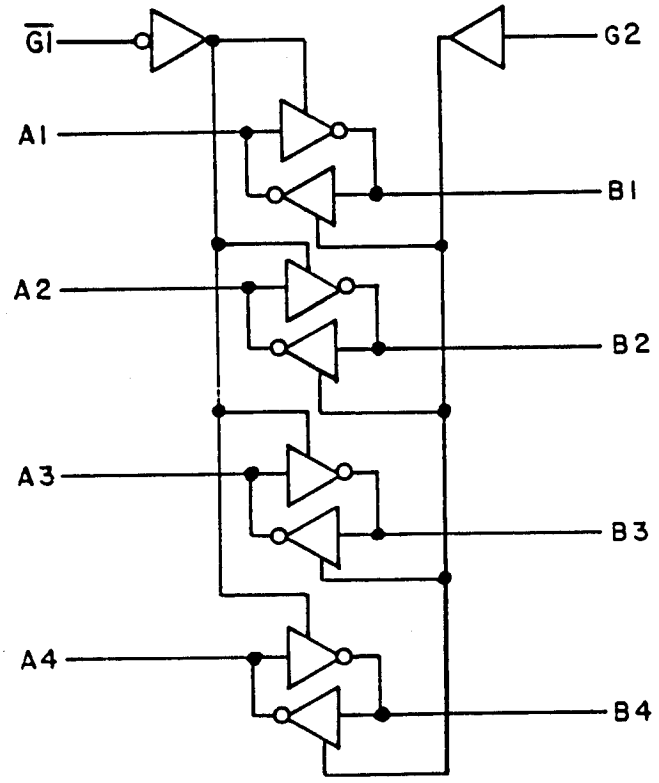

Device type 02

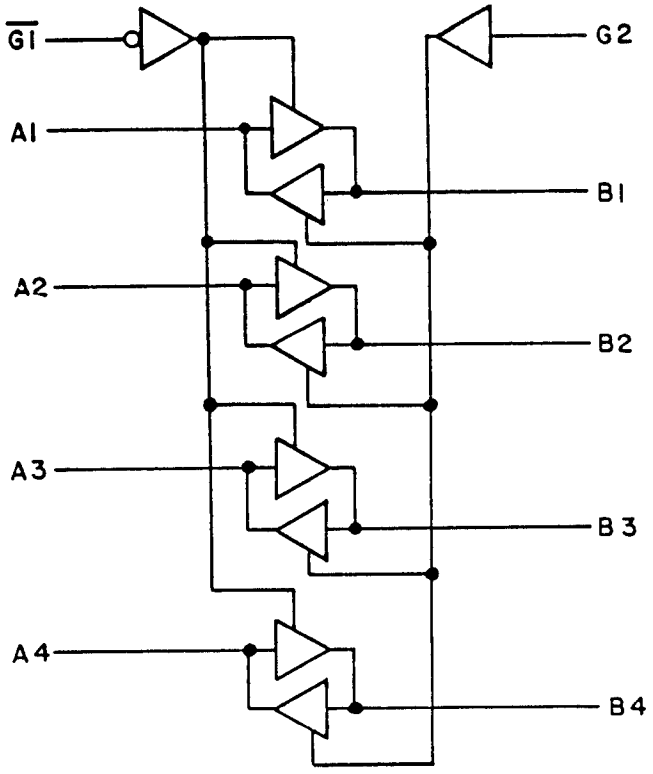

FIGURE 4. Switching time test circuit and waveforms - Continued.

Device types 03 and 53

Cases R

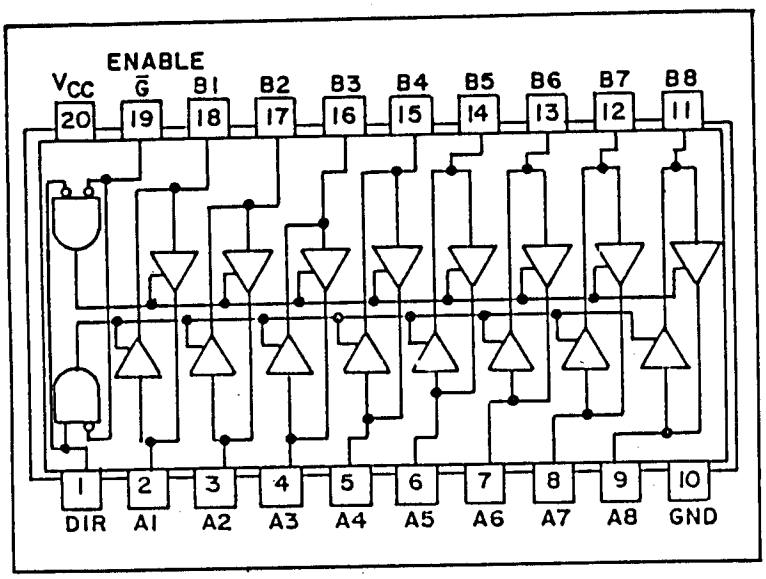

Device types 03 and 53

Case 2

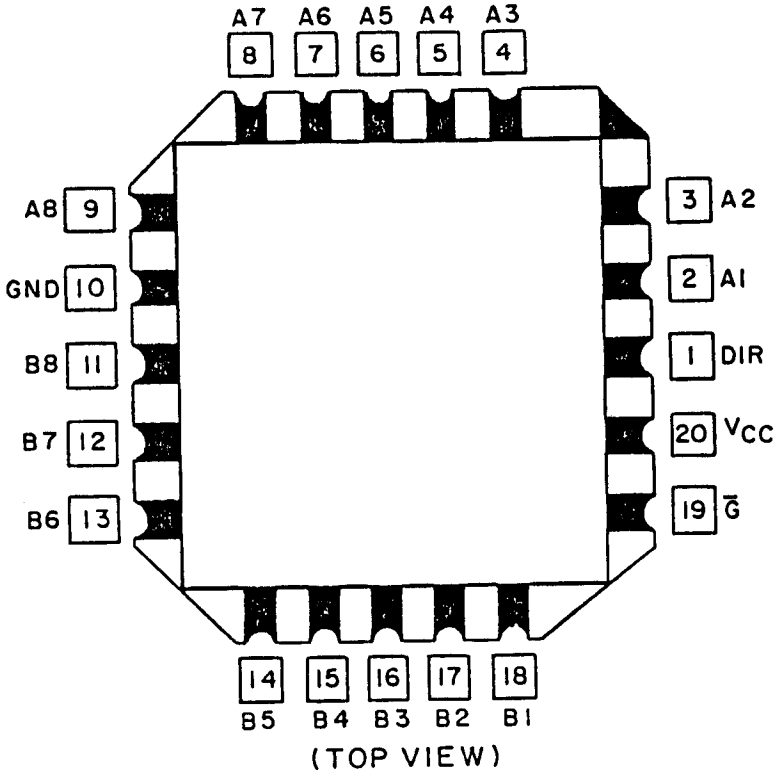

FIGURE 1. Logic diagrams and terminal connections (top view) - Continued.

Device types 06, 07
Case R

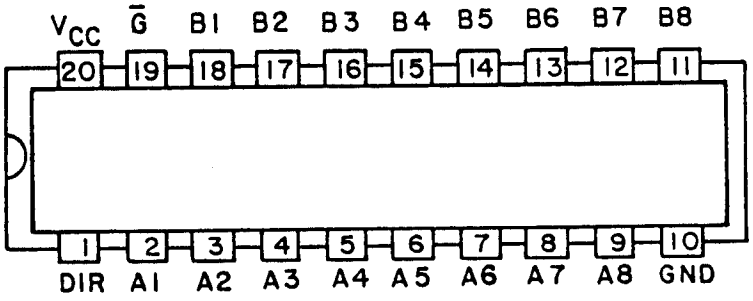

Device types 06, 07
Case 2

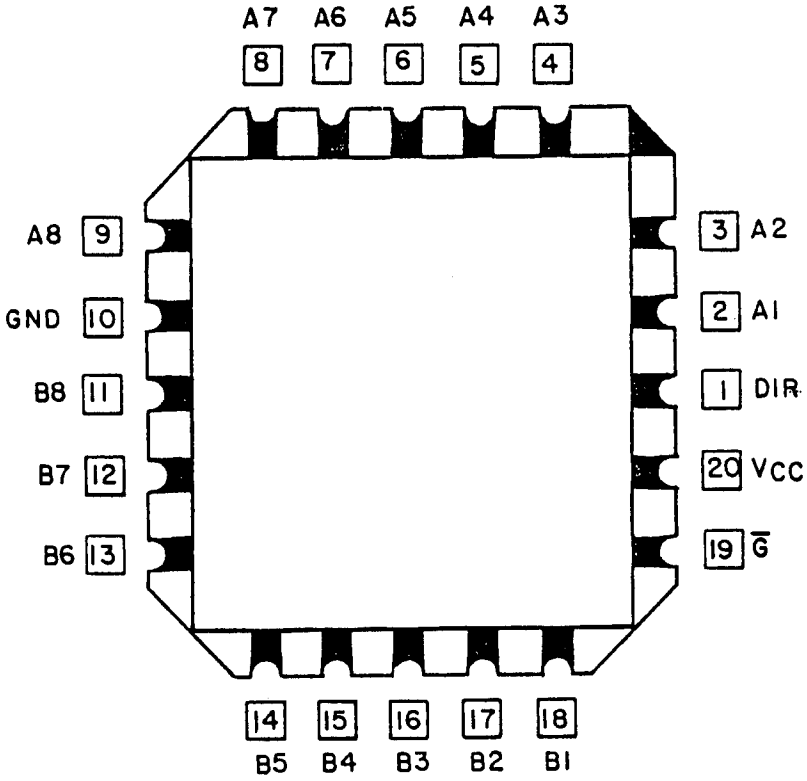

FIGURE 1. Logic diagrams and terminal connections (top view) - Continued.

Device type 06

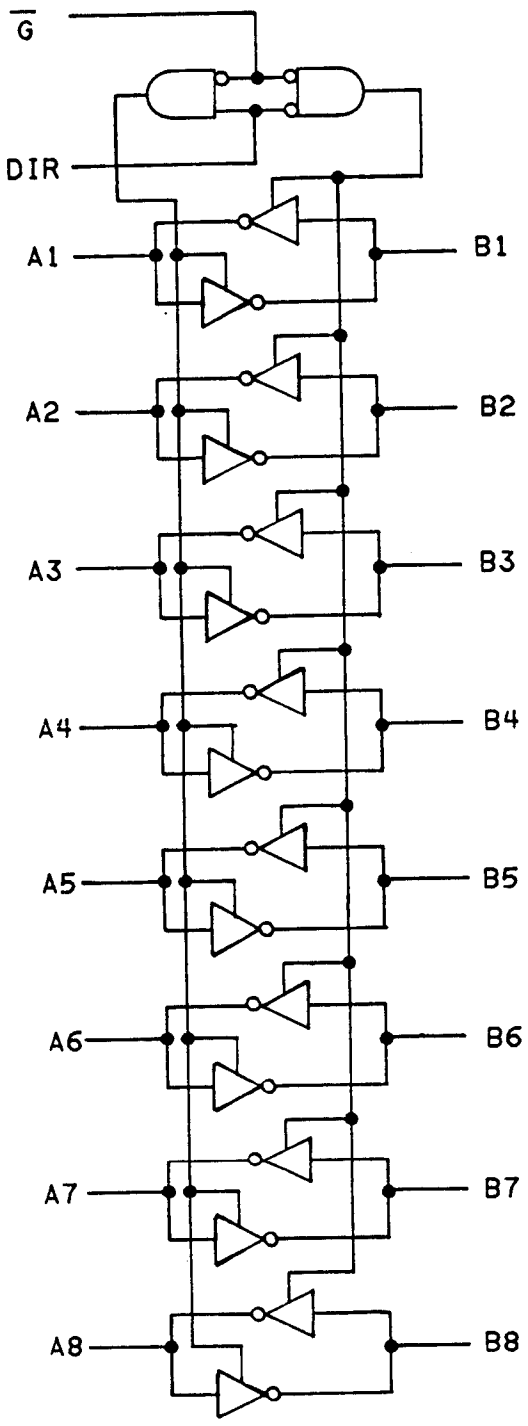

Device type 07

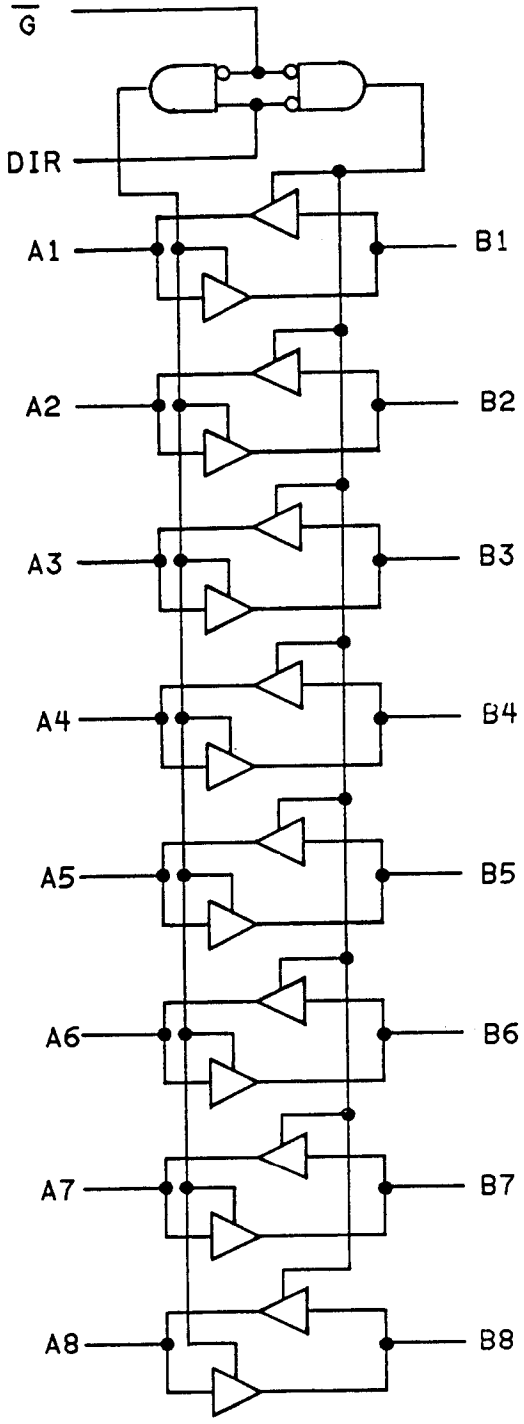

FIGURE 1. Logic diagrams and terminal connections (top view) - Continued.

Device types 08 and 09

(Terminal connections)

Case L

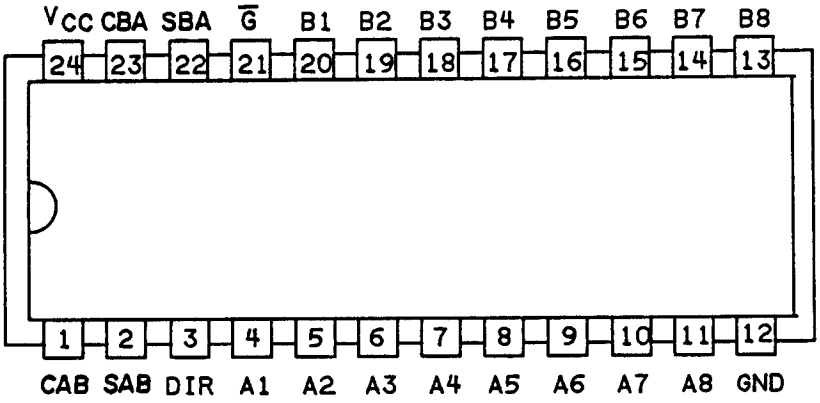

Device types 08 and 09

(Top view)

Case 3

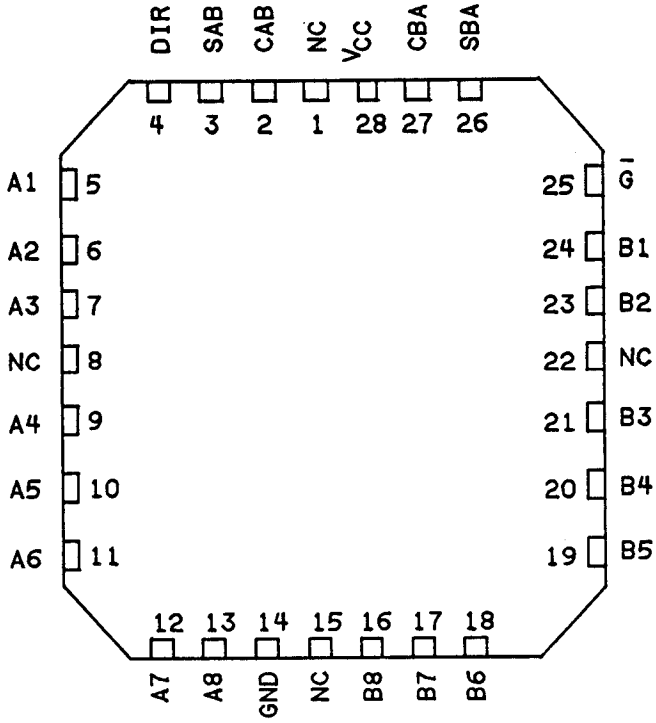

NC-NO internal connection

FIGURE 1. Logic diagrams and terminal connections (top view) - Continued.

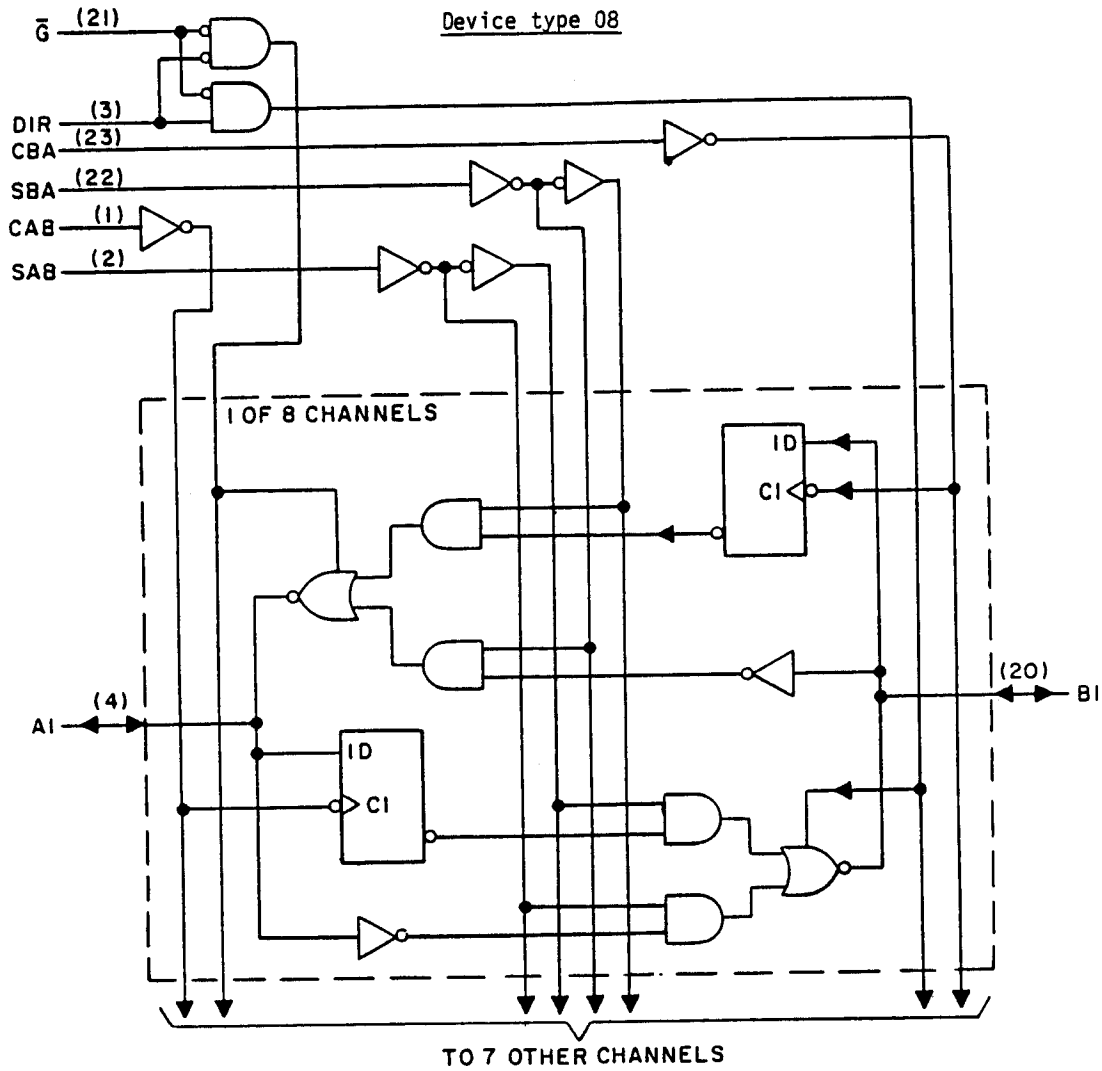

NOTE: Terminal connections shown in parentheses are for case L.

FIGURE 1. Logic diagrams and terminal connections (top view) - Continued.

Device type 09
(logic diagrams)

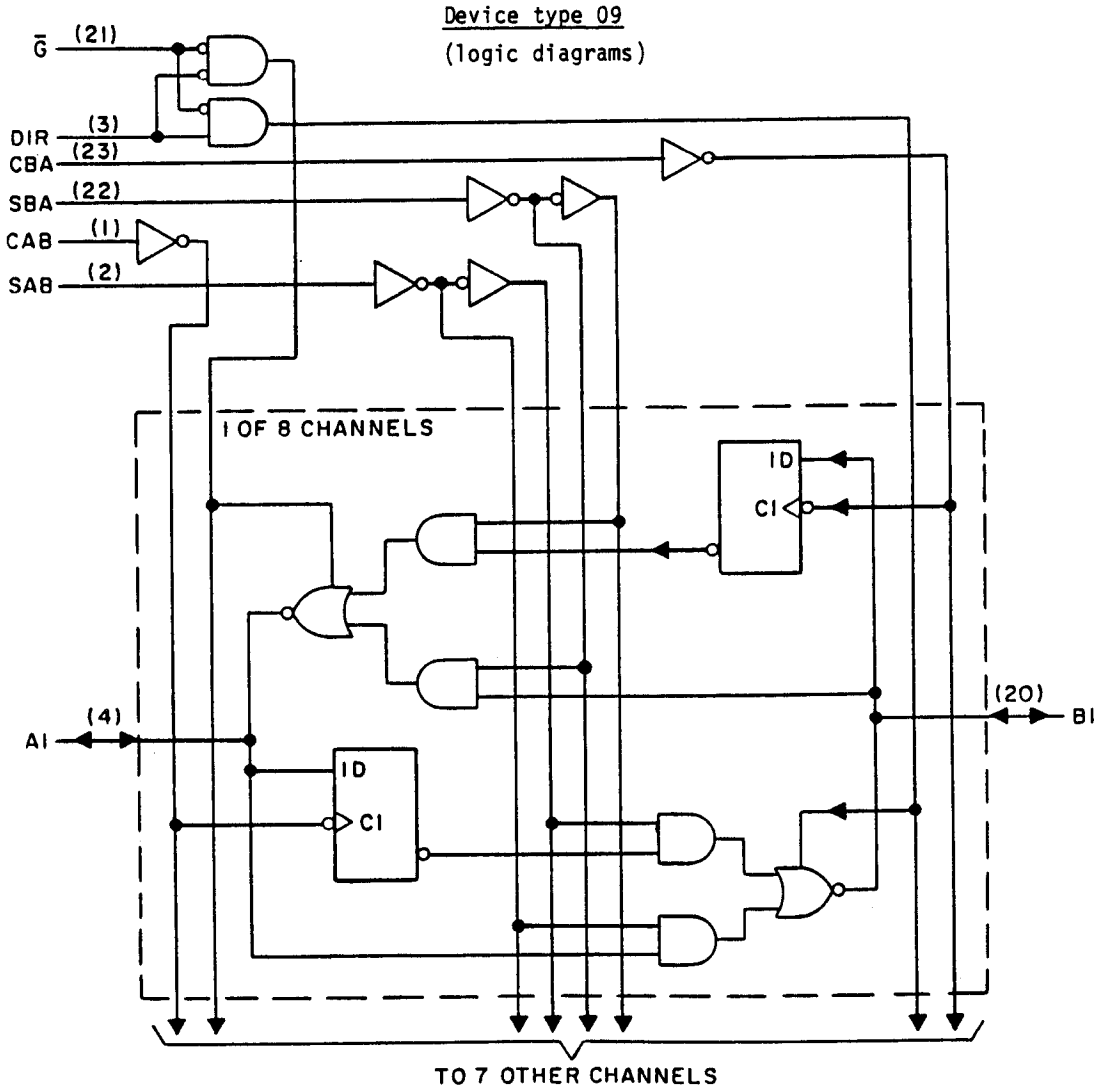

NOTE: Terminal connections shown in parentheses are for case L.

FIGURE 1. Logic diagrams and terminal connections (top view) - Continued.

Device type 01

Inputs		Outputs
$\overline{G}_1$	G_2	
L	L	$\overline{A}$ to B
H	H	$\overline{B}$ to A
H	L	Isolation
L	H	Isolation

H = high level, L = low level

Device type 02

Inputs		Outputs
$\overline{G}AB$	GBA	
L	L	A to B
H	H	B to A
H	L	Isolation
L	H	Isolation

H = high level, L = low level

Device types 03 and 53

Enable $\overline{G}$	Direction control DIR	Operation
L	L	B data to A bus
L	H	A data to B bus
H	X	Isolation

H = high level, L = low level, X = irrelevant

FIGURE 2. Truth tables.

Device type 06

Enable $\overline{G}$	Direction control DIR	Operation
L	L	$\overline{B}$ data to A bus
L	H	$\overline{A}$ data to B bus
H	X	Isolation

H = High level, L = Low level, X = Irrelevant

Device type 07

Enable $\overline{G}$	Direction control DIR	Operation
L	L	B data to A bus
L	H	$\overline{A}$ data to B bus
H	X	Isolation

H = High level, L = Low level, X = Irrelevant

FIGURE 2. Truth tables - Continued.

Device type 08

Inputs						Data I/O*		Operation or function
G	DIR	CAB	CAB	SAB	SBA	A1 thru A8	B1 thru B8	
H H	X X	H or L	H or L	X X	X X	Input	Input	Isolation store A and B data
L L	L L	X X	X H or L	X X	L H	Output	Input	Real time B data to A bus store B and A data
L L	H H	X H or L	X X	L H	X X	Input	Output	Real time B data to A bus store A and B data
X X	X X	↑ X	X ↑	X X	X X	Input not specified	Not specified input	Store A, B undefined Store B. A undefined

H = High Level L = Low Level X = Irrelevant ↑ = Low-to-high level transition
*The data output functions may be enabled or disabled by various signals at the G and DIR inputs. Data input functions are always enabled, i.e., data at the bus pins will be stored on every low-to-high transition on the clock inputs.

Device type 09

Inputs						Data I/O*		Operation or function
G	DIR	CAB	CAB	SAB	SBA	A1 thru A8	B1 thru B8	
H H	X X	H or L	H or L	X X	X X	Input	Input	Isolation store A and B data
L L	L L	X X	X H or L	X X	L H	Output	Input	Real time B data to A bus store B and A data
L L	H H	X H or L	X X	L H	X X	Input	Output	Real time B data to A bus store A and B data
X X	X X	↑ X	X ↑	X X	X X	Input not specified	Not specified input	Store A, B undefined Store B. A undefined

H = High Level L = Low Level X = Irrelevant ↑ = Low-to-high level transition
*The data output functions may be enabled or disabled by various signals at the G and DIR inputs. Data input functions are always enabled, i.e., data at the bus pins will be stored on every low-to-high transition on the clock inputs.

FIGURE 2. Truth tables - Continued.

Device types 01, 02, 03, 06, 07 and 53

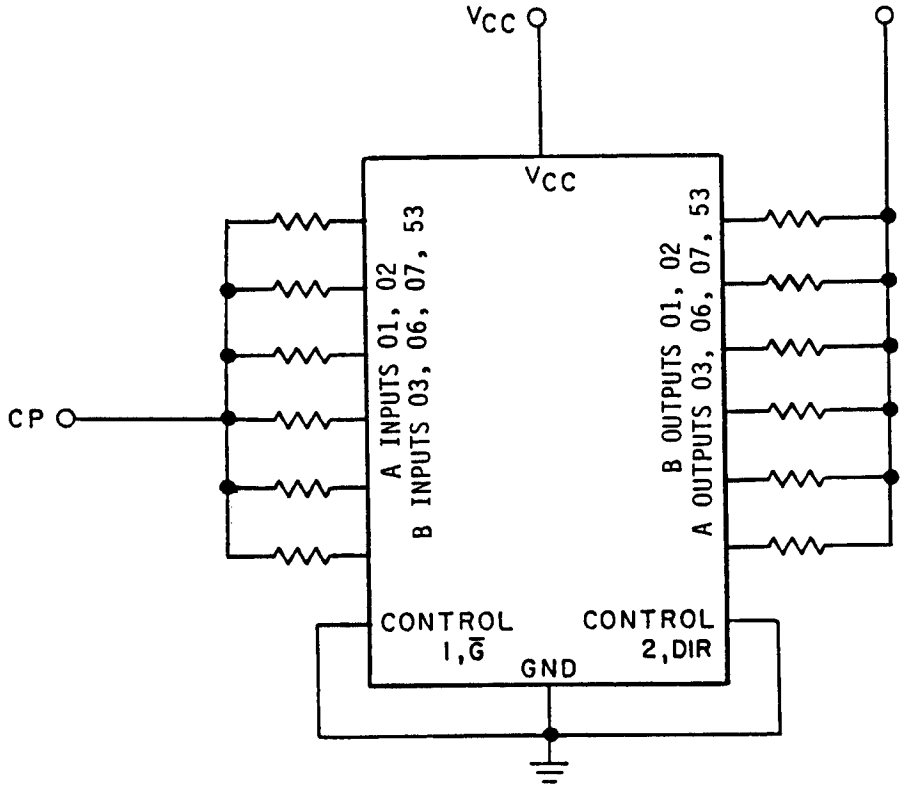

NOTES:

1. For static burn-in I, all inputs shall be connected to GND. Outputs shall be open or connected to $V_{CC}/2$. Resistors are optional on outputs if open. Resistors are required on inputs, and required on outputs connected to $V_{CC}/2$. R = 680Ω to 47 kΩ.
2. For static burn-in II, all inputs shall be connected through the resistors to V_{CC}. Outputs shall be open or connected to $V_{CC}/2$. Resistors are optional on outputs if open. Resistors are required on inputs, and required on outputs connected to $V_{CC}/2$. R = 680Ω to 47 kΩ.
3. For dynamic burn-in, all inputs shall be connected through the resistors in parallel to a common CP. Outputs shall be connected to $V_{CC}/2$ ±.5 V through the resistors. R = 680Ω ±5% for outputs, 680Ω to 47 kΩ for inputs.
4. CP = 25 kHz to 1 MHz square wave; duty cycle = 50 ±15%; V_{IH} = 4.5 V to V_{CC}; V_{IL} = 0 ±.5 V, transition time ≤ 0.5 µs.
5. V_{CC} = 6.0 V ±0.5 V.

FIGURE 3. Burn-in and life test circuits.

Device types 08 and 09

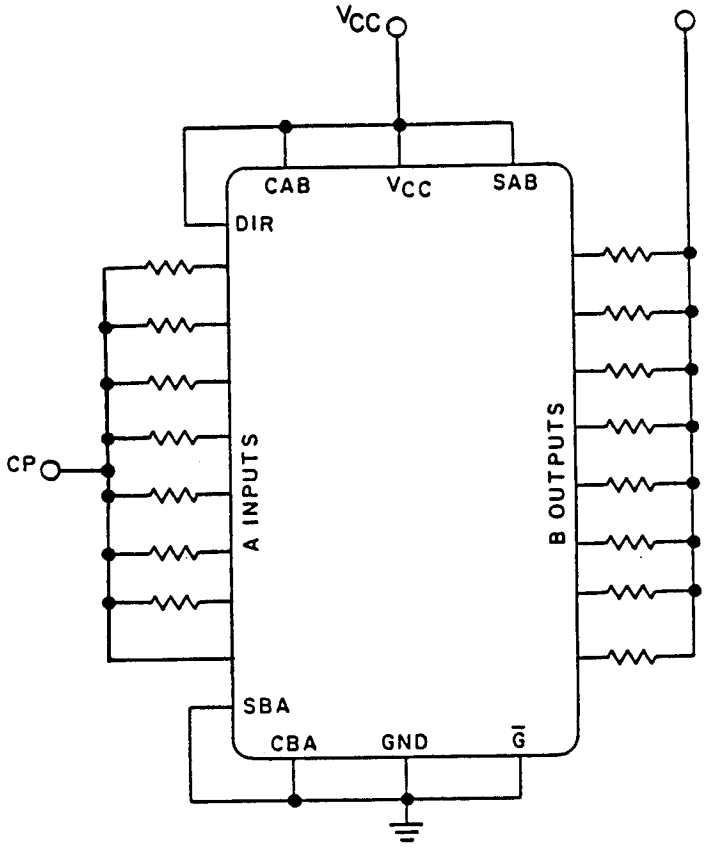

NOTES:

1. For static burn-in I, all inputs shall be connected to GND. Outputs shall be open or connected to $V_{CC}/2$. Resistors are optional on outputs if open. Resistors are required on inputs, and required on outputs connected to $V_{CC}/2$. R = 680Ω to 47 kΩ.
2. For static burn-in II, all inputs shall be connected through the resistors to V_{CC}. Outputs shall be open or connected to $V_{CC}/2$. Resistors are optional on outputs if open. Resistors are required on inputs, and required on outputs connected to $V_{CC}/2$. R = 680Ω to 47 kΩ.
3. For dynamic burn-in, all inputs shall be connected through the resistors in parallel to a common CP. Outputs shall be connected to $V_{CC}/2$ ±.5 V through the resistors. R = 680Ω ±5% for outputs, 680Ω to 47 kΩ for inputs.
4. CP = 25 kHz to 1 MHz square wave; duty cycle = 50 ±15%; V_{IH} = 4.5 V to V_{CC}; V_{IL} = 0 ±.5 V, transition time ≤ 0.5 µs.
5. V_{CC} = 6.0 V ±0.5 V.

FIGURE 3. Burn-in and life test circuits - Continued.

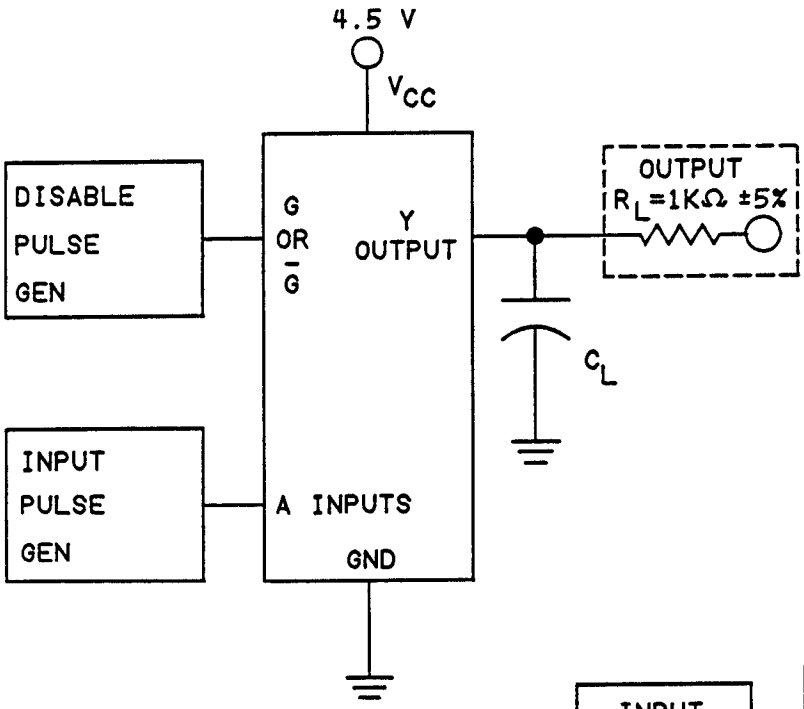

TEST CIRCUIT TYPES 01, 02, 03 and 53 (see note 6).

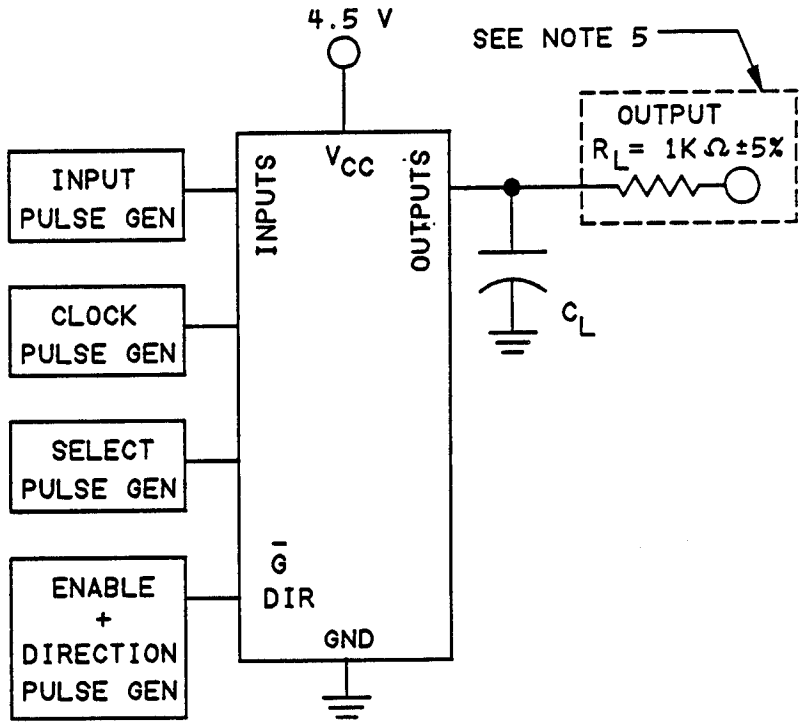

TEST CIRCUIT TYPES 08 and 09

NOTES:
1. R_L = 1kΩ ±5%.
2. C_L = 50 pF ±10% including probe and jig capacitance.
3. The pulse generators have the following characteristics: V_{gen} = 4.5 V, PRR ≤ 1 MHz, t_{TLH} ≤ 6 ns, t_{THL} ≤ 6 ns, Z_{OUT} = 50Ω.
4. Clock pulse characteristics: t_p (CLK) = 18 ns, t_{setup} = 20 ns, t_{hold} = 5 ns.
5. Output connected to V_{CC} for t_{PLZ} and t_{PZL}; and to GND for t_{PHZ} and t_{PZH}, see figure 4.
6. The input signal for the 53 device type (HCT) will be 0-3 volts; however, the 50% V_{CC} measure point is 1.3 volts for input and output signals. The 10% V_{CC} and 90% V_{CC} points are, 3 V and 2.7 V, respectively.

FIGURE 4. Switching time test circuit and waveforms.

Device types 06 and 07

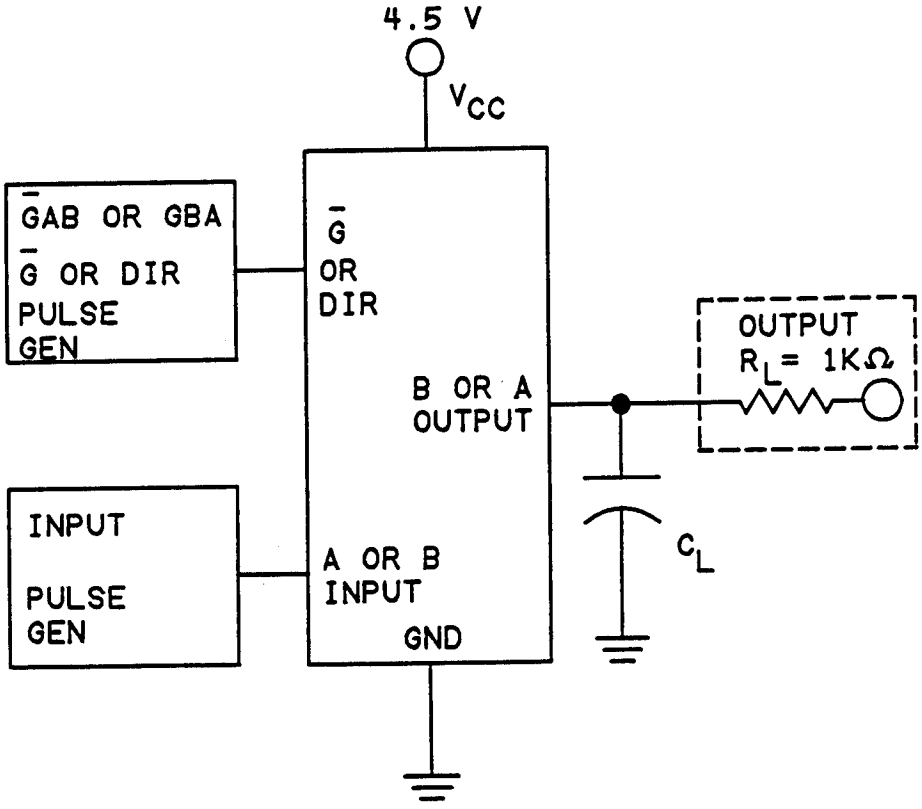

TEST CIRCUIT

NOTES:
1. The input pulse shall have the following characteristics:
   $t_f = t_r \leq 6\mu s$, Vgen = 4.5 V
2. R_L = 1 kΩ ±5%.
3. C_L = 50 pF ±10%, including scope probe, wiring, and stray capacitance without package in test fixture.
4. Voltage measurements are to be made with respect to network ground terminal.
5. Output connected to V_{CC} for t_{PLZ} and t_{PZL}; and to GND for t_{PHZ} and t_{PZH}, see figure 4A.

FIGURE 4. Switching time test circuit and waveforms - Continued.

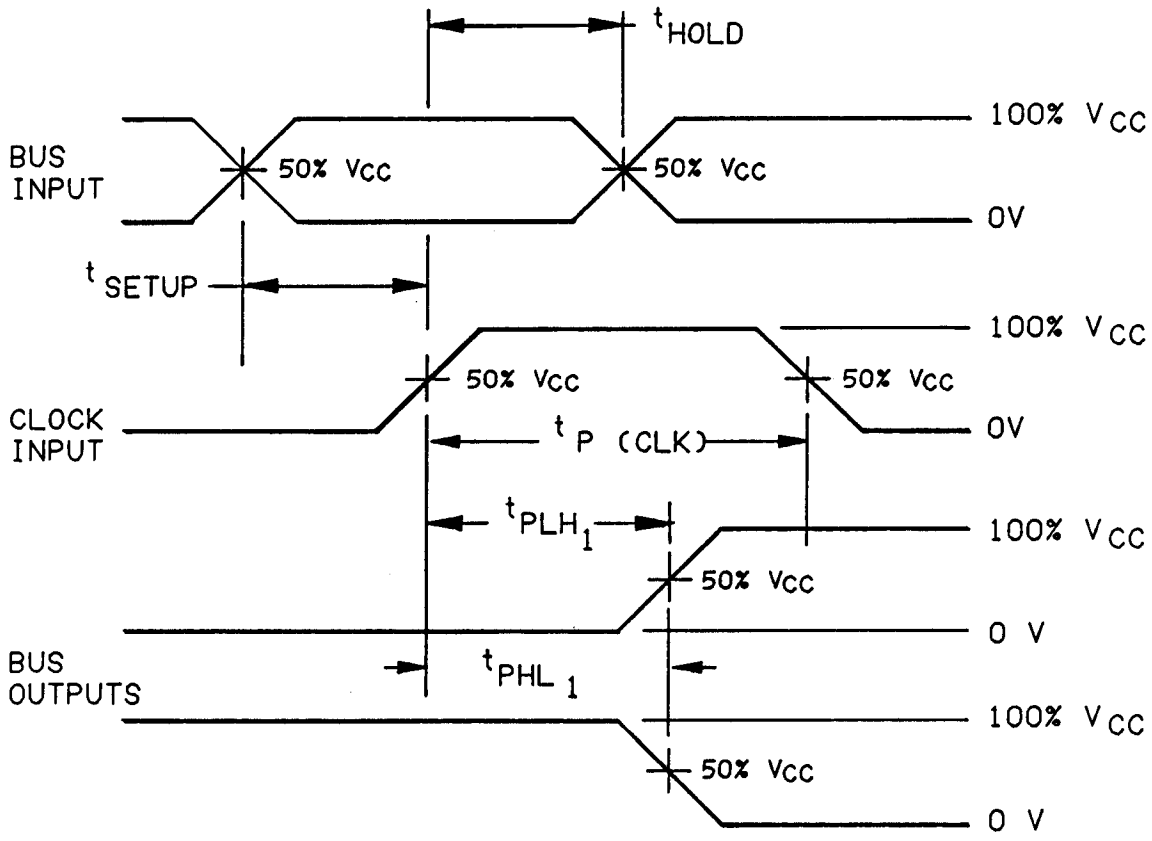

CLOCK TO OUTPUT (DEVICE TYPES 08 and 09)

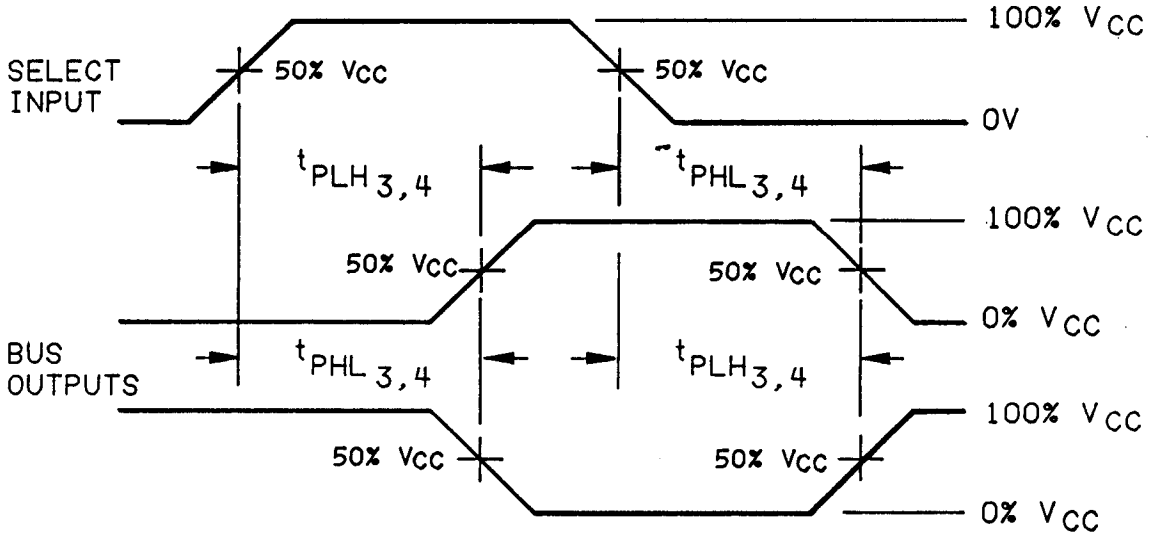

SELECT TO OUTPUTS (DEVICE TYPES 08 and 09)

NOTE: $t_{HOLD} \leq 5$ ns, $t_{setup} \leq 30$ ns, are tp (clock) ≤ 30 ns.

FIGURE 4. Switching time test circuit and waveforms - Continued.

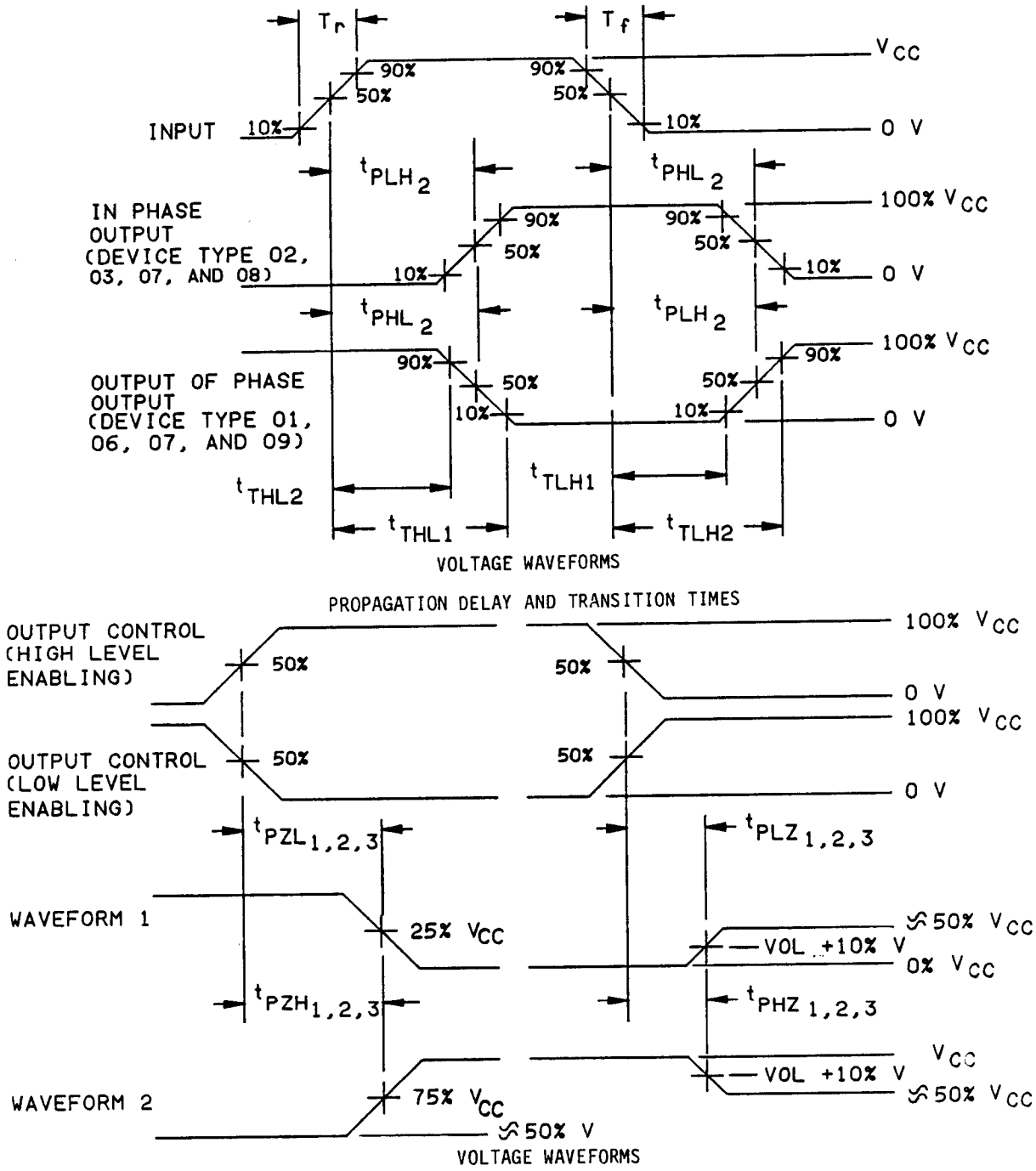

ENABLE AND DISABLE TIMES, THREE-STATE OUTPUTS, ALL DEVICE TYPES

NOTES:
1. Input pulse shall have following characteristics: $t_r = t_f \leq 6$ ns; PRR $\leq$ 1 MHz; duty cycle = 50%
2. All unused inputs are tied to V_{CC}
3. $t_{THL1} - t_{THL2} = t_{THL}$; $t_{TLH2} - t_{TLH1} = t_{TLH}$

FIGURE 4. Switching time test circuit and waveforms - Continued.

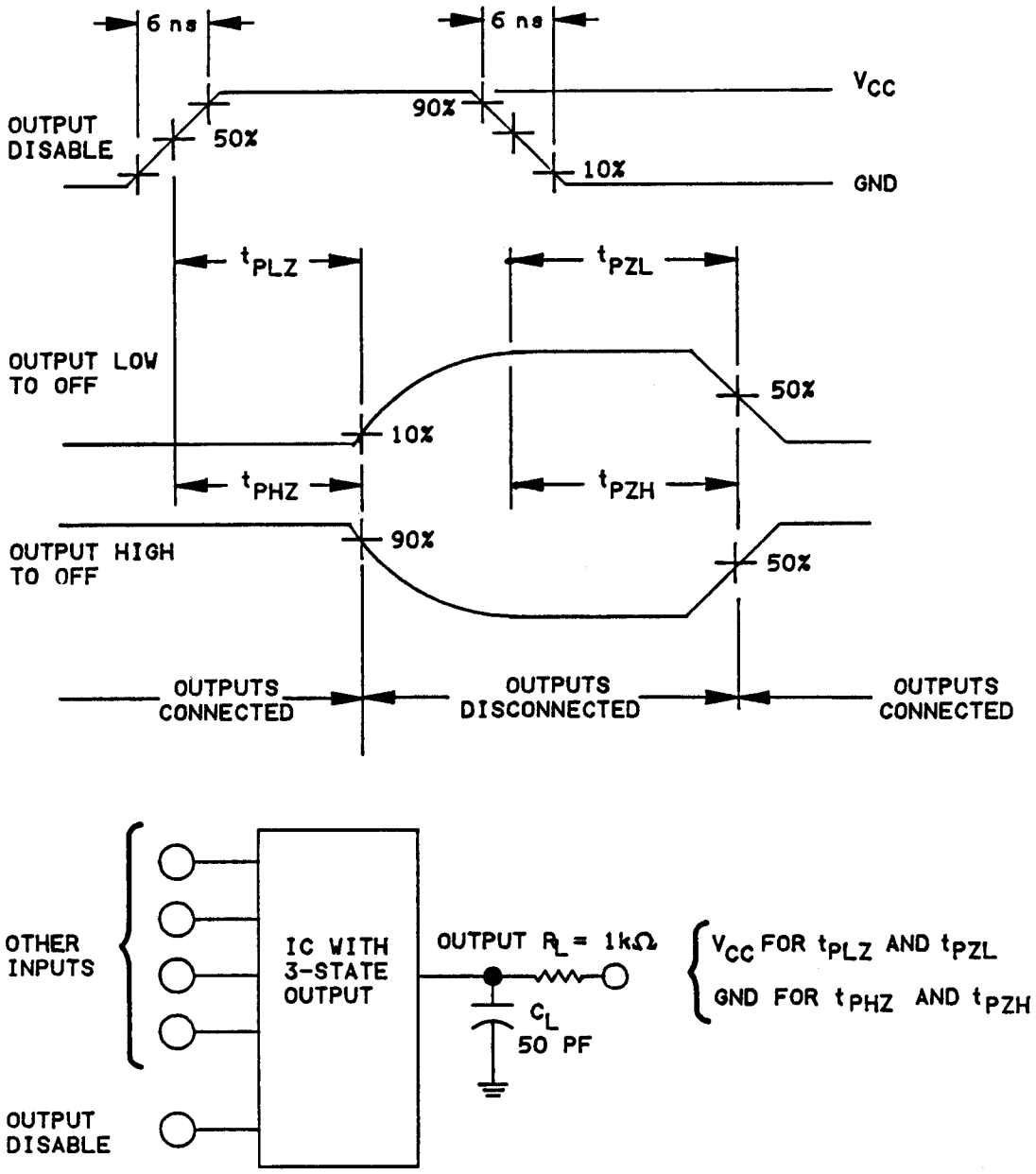

FIGURE 4A. Three-state propagation delay wave shapes and test circuit.

TABLE III. Group A inspection for device type 01.

Symbol	MIL-STD-883 method	Case 2 / Case C / Test no.	Terminal conditions 1/ 2 / 1 / GT	3 / 2 / NC	4 / 3 / A1	6 / 4 / A2	8 / 5 / A3	9 / 6 / A4	10 / 7 / GND	12 / 8 / B4	13 / 9 / B3	14 / 10 / B2	16 / 11 / B1	18 / 12 / NC	19 / 13 / G2	20 / 14 / V_{CC}	Measured terminal	Test limits: Subgroup 1 T_C = +25°C Min	Subgroup 1 Max	Subgroup 2 T_C = +125°C Min	Subgroup 2 Max	Subgroup 3 T_C = -55°C Min	Subgroup 3 Max	Unit
V_{IC} (pos)		1	1 mA						1/							GND	GT	1/ 0.4	1.5					V
		2							1/						1 mA	GND	G2	0.4	1.5					"
V_{IC} (neg)		3	-1 mA						GND							1/	GT		-1.5					"
		4							"						-1 mA	1/	G2		-1.5					"
I_{CC}	3005	5	GND		6 V	GND	6 V	GND	"						GND	6 V	V_{CC}		0.2		20			μA
		6	GND		6 V	6 V	6 V	6 V	"						GND	"	"		"		"			"
		7	6 V						"	GND	6 V	GND	6 V		6 V	"	"		"		"			"
		8	6 V						"	6 V	6 V	6 V	6 V		6 V	"	"		"		"			"
I_{CCZ}		9	6 V						"						GND	"	"		"		10			"
V_{OH3}	3006	10	4.2 V		-20 μA				"				1.2 V		4.2 V	"	A1	5.95		5.95		5.95		V
		11	"			-20 mA			"			1.2 V			"	"	A2	"		"		"		"
		12	"				-20 mA		"		1.2 V				"	"	A3	"		"		"		"
		13	"					-20 mA	"	1.2 V					"	"	A4	"		"		"		"
		14	1.2 V		1.2 V				"				-20 mA		1.2 V	"	B1	"		"		"		"
		15	"			1.2 V			"			-20 mA			"	"	B2	"		"		"		"
		16	"				1.2 V		"		-20 mA				"	"	B3	"		"		"		"
		17	"					1.2 V	"	-20 mA					"	"	B4	"		"		"		"
V_{OH5}	3006	18	4.2 V		-7.8 mA				"				1.2 V		4.2 V	"	A1	5.48		5.2		5.48		"
		19	"			-7.8 mA			"			1.2 V			"	"	A2	"		"		"		"
		20	"				-7.8 mA		"		1.2 V				"	"	A3	"		"		"		"
		21	"					-7.8 mA	"	1.2 V					"	"	A4	"		"		"		"
		22	1.2 V		1.2 V				"				-7.8 mA		1.2 V	"	B1	"		"		"		"
		23	"			1.2 V			"			-7.8 mA			"	"	B2	"		"		"		"
		24	"				1.2 V		"		-7.8 mA				"	"	B3	"		"		"		"
		25	"					1.2 V	"	-7.8 mA					"	"	B4	"		"		"		"
V_{OL3}	3007	26	4.2 V		20 μA				"				4.2 V		4.2 V	6 V	A1		.05		.05		.05	"
		27	"			20 μA			"			4.2 V			"	"	A2		"		"		"	"
		28	"				20 μA		"		4.2 V				"	"	A3		"		"		"	"
		29	"					20 μA	"	4.2 V					"	"	A4		"		"		"	"
		30	1.2 V		4.2 V				"				20 μA		1.2 V	"	B1		"		"		"	"
		31	"			4.2 V			"			20 μA			"	"	B2		"		"		"	"
		32	"				4.2 V		"		20 μA				"	"	B3		"		"		"	"
		33	"					4.2 V	"	20 μA					"	"	B4		"		"		"	"
V_{OL5}	3007	34	4.2 V		7.8 mA				"				4.2 V		4.2 V	"	A1		0.26		0.4		0.26	"
		35	"			7.8 mA			"			4.2 V			"	"	A2		"		"		"	"
		36	"				7.8 mA		"		4.2 V				"	"	A3		"		"		"	"
		37	"					7.8 mA	"	4.2 V					"	"	A4		"		"		"	"
		38	1.2 V		4.2 V				"				7.8 mA		1.2 V	"	B1		"		"		"	"
		39	"			4.2 V			"			7.8 mA			"	"	B2		"		"		"	"
		40	"				4.2 V		"		7.8 mA				"	"	B3		"		"		"	"
		41	"					4.2 V	"	7.8 mA					"	"	B4		"		"		"	"
I_{OS4}	3011	42	4 V		GND				"				GND		4 V	4 V	A1	-10	-135	-10	-135	-10	-135	mA
		43	"			GND			"			GND			"	"	A2	"	"	"	"	"	"	"
		44	"				GND		"		GND				"	"	A3	"	"	"	"	"	"	"
		45	"					GND	"	GND					"	"	A4	"	"	"	"	"	"	"
		46	GND		GND				"				GND		GND	"	B1	"	"	"	"	"	"	"
		47	"			GND			"			GND			"	"	B2	"	"	"	"	"	"	"
		48	"				GND		"		GND				"	"	B3	"	"	"	"	"	"	"
		49	"					GND	"	GND					"	"	B4	"	"	"	"	"	"	"

See footnotes at end of table.

TABLE III. Group A inspection for device type 01 - Continued.

Symbol	MIL-STD-883 method	Case 2 / Case C	Terminal conditions 1/														Measured terminal	Test Limits						Unit
			2 / 1	3 / 2	4 / 3	6 / 4	8 / 5	9 / 6	10 / 7	12 / 8	13 / 9	14 / 10	16 / 11	18 / 12	19 / 13	20 / 14		Subgroup 1 T_C = +25°C		Subgroup 2 T_C = +125°C		Subgroup 3 T_C = -55°C		
		Test no.	$\overline{GT}$	NC	A1	A2	A3	A4	GND	B4	B3	B2	B1	NC	G2	V_{CC}		Min	Max	Min	Max	Min	Max	
I_{IH}/ I_{OZH}		50	2/		0 V				GND				2/		4.2 V	6 V	A1		.1		2.0			µA
		51	"			6 V			"			2/			"	"	A2		"		"			"
		52	"				6 V		"		2/				"	"	A3		"		"			"
		53	"					6 V	"	2/					"	"	A4		"		"			"
		54	1.2 V		2/				"				6 V		2/	"	B1		"		"			"
		55	"			2/			"			6 V			"	"	B2		"		"			"
		56	"				2/		"		6 V				"	"	B3		"		"			"
		57	"					2/	"	6 V					"	"	B4		"		"			"
I_{IL}/ I_{OZL}		58	2/		GND				"				2/		4.2 V	"	A1		-.1		-2.0			"
		59	"			GND			"			2/			"	"	A2		"		"			"
		60	"				GND		"		2/				"	"	A3		"		"			"
		61	"					GND	"	2/					"	"	A4		"		"			"
		62	1.2 V		2/				"				GND		2/	"	B1		"		"			"
		63	"			2/			"			GND			"	"	B2		"		"			"
		64	"				2/		"		GND				"	"	B3		"		"			"
		65	"					2/	"	GND					"	"	B4		"		"			"
I_{IH}	3010	66	6 V						"							"	$\overline{GT}$		.05		.1			"
		67							"						6 V	"	G2		"		"			"
I_{IL}	3009	68	GND						"							"	$\overline{GT}$		-.05		-.1			"
		69							"						GND	"	G2		"		"			"
																		Subgroup 4 T_C = +25°C						Unit
																		Min	Max					
$C_{I/O}$ 7/		70	GND		3/				"						6 V	6 V	A1		20					"
		71	"			3/			"						"	"	A2		"					"
		72	"				3/		"						"	"	A3		"					"
		73	"					3/	"						"	"	A4		"					"
		74	6 V						"				3/		GND	"	B1		"					"
		75	"						"			3/			"	"	B2		"					"
		76	"						"		3/				"	"	B3		"					"
		77	"						"	3/					"	"	B4		"					"
C_C		78	3/						"							GND	$\overline{GT}$		10					"
		79							"						3/	GND	G2		10					"

See footnotes at end of table.

TABLE III. Group A inspection for device type 01 - Continued.

Symbol	MIL-STD-883 method	Case 2 / Case C	Terminal conditions 1/														Measured terminal	Test limits						Unit
			2 / 1	3 / 2	4 / 3	6 / 4	8 / 5	9 / 6	10 / 7	12 / 8	13 / 9	14 / 10	16 / 11	18 / 12	19 / 13	20 / 14		Subgroup 7 T_C = +25°C 4/		Subgroup 8 T_C = +125°C		Subgroup 8 T_C = -55°C 4/		
		Test no.	$\overline{GI}$	NC	A1	A2	A3	A4	GND	B4	B3	B2	B1	NC	G2	V_{CC}		Min	Max	Min	Max	Min	Max	
Truth table tests 5/		80	B		A	A	A	A	GND	L	L	L	L		B	4.5 V	6/							
		81	B		B	B	B	B	"	H	H	H	H		B	"	"							
		82	A		L	L	L	L	"	A	A	A	A		A	"	"							
		83	A		H	H	H	H	"	B	B	B	B		A	"	"							
		84	A		Z	Z	Z	Z	"	Z	Z	Z	Z		B	"	7/							
		85	B		Z	Z	Z	Z	"	Z	Z	Z	Z		A	"	7/							
																		Subgroup 9 T_C = +25°C 4/		Subgroup 10 T_C = +125°C		Subgroup 11 T_C = -55°C 4/		Unit
																		Min	Max	Min	Max	Min	Max	
t_{THL}	3004 (Fig. 4)	86	4.5 V		OUT				GND			IN	IN		4.5 V	4.5 V	A1	2	12	2	16	2	12	ns
		87	"			OUT			"						"	"	A2	"	"	"	"	"	"	"
		88	"				OUT		"		IN				"	"	A3	"	"	"	"	"	"	"
		89	"					OUT	"	IN					"	"	A4	"	"	"	"	"	"	"
		90	GND		IN				"				OUT		GND	"	B1	"	"	"	"	"	"	"
		91	"			IN			"			OUT			"	"	B2	"	"	"	"	"	"	"
		92	"				IN		"		OUT				"	"	B3	"	"	"	"	"	"	"
		93	"					IN	"	OUT					"	"	B4	"	"	"	"	"	"	"
t_{TLH}	3004 (Fig. 4)	94 to 101	Same tests, terminal conditions, and limits as specified above for t_{THL}.															2	"	2	"	2	"	"
t_{PHL2}	3003 (Fig. 4)	102	GND		IN				GND			OUT	OUT		GND	4.5 V	A1 to B1	3	17	3	23	3	17	"
		103	"			IN			"		OUT				"	"	A2 to B2	"	"	"	"	"	"	"
		104	"				IN		"						"	"	A3 to B3	"	"	"	"	"	"	"
		105	"					IN	"	OUT					"	"	A4 to B4	"	"	"	"	"	"	"
		106	4.5 V		OUT				"			IN	IN		4.5 V	"	B1 to A1	"	"	"	"	"	"	"
		107	"			OUT			"		IN				"	"	B2 to A2	"	"	"	"	"	"	"
		108	"				OUT		"						"	"	B3 to A3	"	"	"	"	"	"	"
		109	"					OUT	"	IN					"	"	B4 to A4	"	"	"	"	"	"	"
t_{PLH2}	3003 (Fig. 4)	110 to 117	Same terminal conditions and terminals as specified above for t_{PHL2}.															3	"	3	"	3	"	"
t_{PZH1} 10/	3003 (Fig. 4)	118	IN		GND				GND			OUT	OUT		GND	4.5 V	$\overline{GI}$ to B1	4	26	4	35	4	26	"
		119	"			GND			"		OUT				"	"	$\overline{GI}$ to B2	"	"	"	"	"	"	"
		120	"				GND		"						"	"	$\overline{GI}$ to B3	"	"	"	"	"	"	"
		121	"					GND	"	OUT					"	"	$\overline{GI}$ to B4	"	"	"	"	"	"	"
		122	4.5 V		OUT				"			GND	GND		IN	"	G2 to A1	"	"	"	"	"	"	"
		123	"			OUT			"		GND				"	"	G2 to B2	"	"	"	"	"	"	"
		124	"				OUT		"						"	"	G2 to B3	"	"	"	"	"	"	"
		125	"					OUT	"	GND					"	"	G2 to B4	"	"	"	"	"	"	"
t_{PZL1} 9/	3003 (Fig. 4)	126	IN		4.5 V				"			OUT	OUT		GND	"	$\overline{GI}$ to B1	"	"	"	"	"	"	"
		127	"			4.5 V			"		OUT				"	"	$\overline{GI}$ to B2	"	"	"	"	"	"	"
		128	"				4.5 V		"						"	"	$\overline{GI}$ to B3	"	"	"	"	"	"	"
		129	"					4.5 V	"	OUT					"	"	$\overline{GI}$ to B4	"	"	"	"	"	"	"
		130	4.5 V		OUT				"			4.5 V	4.5 V		IN	"	G2 to A1	"	"	"	"	"	"	"
		131	"			4.5 V			"		4.5 V				"	"	G2 to B2	"	"	"	"	"	"	"
		132	"				4.5 V		"						"	"	G2 to B3	"	"	"	"	"	"	"
		133	"					4.5 V	"	4.5 V					"	"	G2 to B4	"	"	"	"	"	"	"

See footnotes at end of table.

TABLE III. Group A inspection for device type 01 - Continued.

Symbol	MIL-STD-883 method	Case 2 / Case C	Terminal conditions 1/														Measured terminal	Test limits						Unit
			2 / 1	3 / 2	4 / 3	6 / 4	8 / 5	9 / 6	10 / 7	12 / 8	13 / 9	14 / 10	16 / 11	18 / 12	19 / 13	20 / 14		Subgroup 9 T_C = +25°C 4/		Subgroup 10 T_C = +125°C		Subgroup 11 T_C = -55°C 4/		
		Test no.	$\overline{GI}$	NC	A1	A2	A3	A4	GND	B4	B3	B2	B1	NC	G2	V_{CC}		Min	Max	Min	Max	Min	Max	
t_{PHZ1} 10/	3003 (Fig. 4)	134	IN		GND	GND	GND	GND	GND	OUT	OUT	OUT	OUT		GND	4.5 V	$\overline{GI}$ to B1	4	30	4	40	4	30	ns
		135	"						"						"	"	$\overline{GI}$ to B2	"	"	"	"	"	"	"
		136	"						"						"	"	$\overline{GI}$ to B3	"	"	"	"	"	"	"
		137	"						"						"	"	$\overline{GI}$ to B4	"	"	"	"	"	"	"
		138	4.5 V		OUT	OUT	OUT	OUT	"	OUT	OUT	GND	GND		IN	"	G2 to A1	"	"	"	"	"	"	"
		139	"						"						"	"	G2 to B2	"	"	"	"	"	"	"
		140	"						"		GND				"	"	G2 to B3	"	"	"	"	"	"	"
		141	"					OUT	"	GND					"	"	G2 to B4	"	"	"	"	"	"	"
t_{PLZ1} 9/	3003 (Fig. 4)	142	IN		4.5 V	4.5 V	4.5 V	4.5 V	"	OUT	OUT	OUT	OUT		GND	4.5 V	$\overline{GI}$ to B1	"	"	"	"	"	"	"
		143	"						"						"	"	$\overline{GI}$ to B2	"	"	"	"	"	"	"
		144	"						"						"	"	$\overline{GI}$ to B3	"	"	"	"	"	"	"
		145	"						"						"	"	$\overline{GI}$ to B4	"	"	"	"	"	"	"
		146	4.5 V		OUT	OUT	OUT	OUT	"	OUT		4.5 V	4.5 V		IN	"	G2 to A1	"	"	"	"	"	"	"
		147	"						"						"	"	G2 to B2	"	"	"	"	"	"	"
		148	"						"		4.5 V				"	"	G2 to B3	"	"	"	"	"	"	"
		149	"					OUT	"	4.5 V					"	"	G2 to B4	"	"	"	"	"	"	"

See footnotes at end of table.

TABLE III. Group A inspection for device type 02.

Symbol	MIL-STD-883 method	Case 2 / Case C	Terminal conditions 1/														Measured terminal	Test limits						Unit
			2 / 1	3 / 2	4 / 3	6 / 4	8 / 5	9 / 6	10 / 7	12 / 8	13 / 9	14 / 10	16 / 11	18 / 12	19 / 13	20 / 14		Subgroup 1 T_C = +25°C		Subgroup 2 T_C = +125°C		Subgroup 3 T_C = -55°C		
		Test no.	$\overline{GI}$	NC	A1	A2	A3	A4	GND	B4	B3	B2	B1	NC	G2	V_{CC}		Min	Max	Min	Max	Min	Max	
V_{IC} (pos)		1	1 mA						1/							GND	$\overline{GI}$	1/ 0.4	1.5					V
		2							$\overline{I}$/						1 mA	GND	G2	0.4	1.5					"
V_{IC} (neg)		3	-1 mA						GND							1/	$\overline{GI}$		-1.5					"
		4							"						-1 mA	$\overline{I}$/	G2		-1.5					"
I_{CC}	3005	5	GND		6 V	GND	6 V	GND	"						GND	6 V	V_{CC}		.2		20.0			μA
		6	GND		6 V	6 V	6 V	6 V	"						GND	"	"		"		"			"
		7	6 V						"	GND	6 V	GND	6 V		6 V	"	"		"		"			"
		8	6 V						"	6 V	6 V	6 V	6 V		6 V	"	"		"		"			"
I_{CCZ}		9	6 V						"						GND	"	"		"		10.0			"
V_{OH3}	3006	10	4.2 V		-20 μA				"				1.2 V		4.2 V	"	A1	5.95		5.95		5.95		V
		11	"			-20 μA			"			1.2 V			"	"	A2	"		"		"		"
		12	"				-20 μA		"		1.2 V				"	"	A3	"		"		"		"
		13	"					-20 μA	"	1.2 V					"	"	A4	"		"		"		"
		14	1.2 V		1.2 V				"				-20 μA		1.2 V	"	B1	"		"		"		"
		15	"			1.2 V			"			-20 μA			"	"	B2	"		"		"		"
		16	"				1.2 V		"		-20 μA				"	"	B3	"		"		"		"
		17	"					1.2 V	"	-20 μA					"	"	B4	"		"		"		"
V_{OH5}	3006	18	4.2 V		-7.8 mA				"				1.2 V		4.2 V	"	A1	5.48		5.2		5.48		"
		19	"			-7.8 mA			"			1.2 V			"	"	A2	"		"		"		"
		20	"				-7.8 mA		"		1.2 V				"	"	A3	"		"		"		"
		21	"					-7.8 mA	"	1.2 V					"	"	A4	"		"		"		"
		22	1.2 V		1.2 V				"				-7.8 mA		1.2 V	"	B1	"		"		"		"
		23	"			1.2 V			"			-7.8 mA			"	"	B2	"		"		"		"
		24	"				1.2 V		"		-7.8 mA				"	"	B3	"		"		"		"
		25	"					1.2 V	"	-7.8 mA					"	"	B4	"		"		"		"
V_{OL3}	3007	26	4.2 V		20 μA				"				4.2 V		4.2 V	6 V	A1		.05		.05		.05	"
		27	"			20 μA			"			4.2 V			"	"	A2		"		"		"	"
		28	"				20 μA		"		4.2 V				"	"	A3		"		"		"	"
		29	"					20 μA	"	4.2 V					"	"	A4		"		"		"	"
		30	1.2 V		4.2 V				"				20 μA		1.2 V	"	B1		"		"		"	"
		31	"			4.2 V			"			20 μA			"	"	B2		"		"		"	"
		32	"				4.2 V		"		20 μA				"	"	B3		"		"		"	"
		33	"					4.2 V	"	20 μA					"	"	B4		"		"		"	"
V_{OL5}	3007	34	4.2 V		7.8 mA				"				4.2 V		4.2 V	"	A1		0.26		0.4		0.26	"
		35	"			7.8 mA			"			4.2 V			"	"	A2		"		"		"	"
		36	"				7.8 mA		"		4.2 V				"	"	A3		"		"		"	"
		37	"					7.8 mA	"	4.2 V					"	"	A4		"		"		"	"
		38	1.2 V		4.2 V				"				7.8 mA		1.2 V	"	B1		"		"		"	"
		39	"			4.2 V			"			7.8 mA			"	"	B2		"		"		"	"
		40	"				4.2 V		"		7.8 mA				"	"	B3		"		"		"	"
		41	"					4.2 V	"	7.8 mA					"	"	B4		"		"		"	"
I_{OS4}	3011	42	4 V		GND				"				4 V		4 V	4 V	A1	-10	-135	-10	-135	-10	-135	mA
		43	"			GND			"			4 V			"	"	A2	"	"	"	"	"	"	"
		44	"				GND		"		4 V				"	"	A3	"	"	"	"	"	"	"
		45	"					GND	"	4 V					"	"	A4	"	"	"	"	"	"	"
		46	GND		4 V				"				GND		GND	"	B1	"	"	"	"	"	"	"
		47	"			4 V			"			GND			"	"	B2	"	"	"	"	"	"	"
		48	"				4 V		"		GND				"	"	B3	"	"	"	"	"	"	"
		49	"					4 V	"	GND					"	"	B4	"	"	"	"	"	"	"

See footnotes at end of table.

TABLE III. Group A inspection for device type 02 - Continued.

Symbol	MIL-STD-883 method	Case 2 / Case C	Test no.	Terminal conditions 1/ 2 / 1 GT	3 / 2 NC	4 / 3 A1	6 / 4 A2	8 / 5 A3	9 / 6 A4	10 / 7 GND	12 / 8 B4	13 / 9 B3	14 / 10 B2	16 / 11 B1	18 / 12 NC	19 / 13 G2	20 / 14 V_{CC}	Measured terminal	Test limits: Subgroup 1 T_C = +25°C Min	Subgroup 1 Max	Subgroup 2 T_C = +125°C Min	Subgroup 2 Max	Subgroup 3 T_C = -55°C Min	Subgroup 3 Max	Unit
I_{IH}/ I_{OZH}			50	2/		6 V				GND				2/		4.2 V	6 V	A1		.1		2.0			µA
			51	"			6 V			"			2/			"	"	A2		"		"			"
			52	"				6 V		"		2/				"	"	A3		"		"			"
			53	"					6 V	"	2/			6 V		"	"	A4		"		"			"
			54	1.2 V		2/				"						2/	"	B1		"		"			"
			55	"			2/			"			6 V			"	"	B2		"		"			"
			56	"				2/		"		6 V				"	"	B3		"		"			"
			57	"					2/	"	6 V					"	"	B4		"		"			"
I_{IL}/ I_{OZL}			58	2/		GND				"	2/					4.2 V	"	A1		-.1		-.2			"
			59	"			GND			"		2/				"	"	A2		"		"			"
			60	"				GND		"			2/			"	"	A3		"		"			"
			61	"					GND	"				2/ GND		"	"	A4		"		"			"
			62	1.2 V		2/				"						2/	"	B1		"		"			"
			63	"			2/			"			GND			"	"	B2		"		"			"
			64	"				2/		"		GND				"	"	B3		"		"			"
			65	"					2/	"	GND					"	"	B4		"		"			"
I_{IH}	3010		66	6 V						"							"	$\overline{GI}$		.05		.1			"
			67							"						6 V	"	G2		"		"			"
I_{IL}	3009		68	GND						"							"	$\overline{GI}$		-.05		-.1			"
			69							"						GND	"	G2		"		"			"
																			Subgroup 4 T_C = +25°C Min	Max					Unit
$C_{I/O}$			70	6 V		3/				"						GND	6 V	A1		20					pF
			71	"			3/			"						"	"	A2		"					"
			72	"				3/		"						"	"	A3		"					"
			73	"					3/	"						"	"	A4		"					"
			74	GND						"				3/		6 V	"	B1		"					"
			75	"						"			3/			"	"	B2		"					"
			76	"						"		3/				"	"	B3		"					"
			77	"						"	3/					"	"	B4		"					"
C_C			78	3/						"							GND	$\overline{GI}$		10					"
			79							"						3/	GND	G2		10					"

See footnotes at end of table.

TABLE III. Group A inspection for device type 02 - Continued.

Symbol	MIL-STD-883 method	Case 2 / Case C / Test no.	Terminal conditions 1/: 2 / 1 / $\overline{GI}$	3 / 2 / NC	4 / 3 / A1	6 / 4 / A2	8 / 5 / A3	9 / 6 / A4	10 / 7 / GND	12 / 8 / B4	13 / 9 / B3	14 / 10 / B2	16 / 11 / B1	18 / 12 / NC	19 / 13 / G2	20 / 14 / V_{CC}	Measured terminal	Test Limits: Subgroup 9 T_C = +25°C 4/ Min	Subgroup 9 Max	Subgroup 10 T_C = +125°C Min	Subgroup 10 Max	Subgroup 11 T_C = -55°C 4/ Min	Subgroup 11 Max	Unit
Truth table tests 5/		80	B		A	A	A	A	GND	H	H	H	H		B	4.5 V	6/							
		81	B		B	B	B	B	"	L	L	L	L		B	"	"							
		82	A		H	H	H	H	"	A	A	A	A		A	"	"							
		83	A		L	L	L	L	"	B	B	B	B		A	"	"							
		84	A		Z	Z	Z	Z	"	Z	Z	Z	Z		B	"	7/							
		85	B		Z	Z	Z	Z	"	Z	Z	Z	Z		A	"	7/							
t_{THL}	3004 (Fig. 4)	86	4.5 V		OUT				"				IN		4.5 V	4.5 V	A1	2	12	2	16	2	12	ns
		87	"			OUT			"			IN			"	"	A2	"	"	"	"	"	"	"
		88	"				OUT		"		IN				"	"	A3	"	"	"	"	"	"	"
		89	"					OUT	"	IN					"	"	A4	"	"	"	"	"	"	"
		90	GND		IN				"				OUT		GND	"	B1	"	"	"	"	"	"	"
		91	"			IN			"			OUT			"	"	B2	"	"	"	"	"	"	"
		92	"				IN		"		OUT				"	"	B3	"	"	"	"	"	"	"
		93	"					IN	"	OUT					"	"	B4	"	"	"	"	"	"	"
t_{TLH}	3004 (Fig. 4)	94 to 101	Same tests, terminal conditions, and limits as specified above for t_{THL}.															2	"	2	"	2	"	"
t_{PHL2}	3003 (Fig. 4)	102	GND		IN				GND			OUT	OUT		GND	4.5 V	A1 to B1	4	17	4	23	4	17	"
		103	"			IN			"		OUT				"	"	A2 to B2	"	"	"	"	"	"	"
		104	"				IN		"						"	"	A3 to B3	"	"	"	"	"	"	"
		105	"					IN	"	OUT					"	"	A4 to B4	"	"	"	"	"	"	"
		106	4.5 V		OUT				"				IN		4.5 V	"	B1 to A1	"	"	"	"	"	"	"
		107	"			OUT			"			IN			"	"	B2 to A2	"	"	"	"	"	"	"
		108	"				OUT		"		IN				"	"	B3 to A3	"	"	"	"	"	"	"
		109	"					OUT	"	IN					"	"	B4 to A4	"	"	"	"	"	"	"
t_{PLH2}	3003 (Fig. 4)	110 to 117	Same terminal conditions and measured terminals as specified above for t_{PHL2}.															4	"	4	"	4	"	"
t_{PZH1} 10/	3003 (Fig. 4)	118	IN		4.5 V				GND			OUT	OUT		GND	4.5 V	$\overline{GI}$ to B1	4	"	4	"	4	"	"
		119	"			4.5 V			"		OUT				"	"	$\overline{GI}$ to B2	"	"	"	"	"	"	"
		120	"				4.5 V		"						"	"	$\overline{GI}$ to B3	"	"	"	"	"	"	"
		121	"					4.5 V	"	OUT					"	"	$\overline{GI}$ to B4	"	"	"	"	"	"	"
		122	4.5 V		OUT				"				4.5 V		IN	"	G2 to A1	"	"	"	"	"	"	"
		123	"			OUT			"			4.5 V			"	"	G2 to A2	"	"	"	"	"	"	"
		124	"				OUT		"		4.5 V				"	"	G2 to A3	"	"	"	"	"	"	"
		125	"					OUT	"	4.5 V					"	"	G2 to A4	"	"	"	"	"	"	"
t_{PZL1} 9/	3003 (Fig. 4)	126	IN		GND				"			OUT	OUT		GND	"	$\overline{GI}$ to B1	"	27	"	36	"	27	"
		127	"			GND			"		OUT				"	"	$\overline{GI}$ to B2	"	"	"	"	"	"	"
		128	"				GND		"						"	"	$\overline{GI}$ to B3	"	"	"	"	"	"	"
		129	"					GND	"	OUT					"	"	$\overline{GI}$ to B4	"	"	"	"	"	"	"
		130	4.5 V		OUT				"				GND		IN	"	G2 to A1	"	"	"	"	"	"	"
		131	"			OUT			"			GND			"	"	G2 to A2	"	"	"	"	"	"	"
		132	"				OUT		"		GND				"	"	G2 to A3	"	"	"	"	"	"	"
		133	"					OUT	"	GND					"	"	G2 to A4	"	"	"	"	"	"	"

See footnotes at end of table.

TABLE III. Group A inspection for device type 02 - Continued.

Symbol	MIL-STD-883 method	Case 2 / Case C	Terminal conditions 1/														Measured terminal	Test limits						Unit
			2 / 1	3 / 2	4 / 3	6 / 4	8 / 5	9 / 6	10 / 7	12 / 8	13 / 9	14 / 10	16 / 11	18 / 12	19 / 13	20 / 14		Subgroup 9 T_C = +25°C 4/		Subgroup 10 T_C = +125°C		Subgroup 11 T_C = -55°C 4/		
		Test no.	$\overline{GI}$	NC	A1	A2	A3	A4	GND	B4	B3	B2	B1	NC	G2	V_{CC}		Min	Max	Min	Max	Min	Max	
t_{PHZ1} 10/	3003 (Fig. 4)	134	IN		4.5 V	4.5 V	4.5 V	4.5 V	GND	OUT	OUT	OUT	OUT		GND	4.5 V	$\overline{GI}$ to B1	4	32	4	42	4	32	ns
		135	"						"						"	"	$\overline{GI}$ to B2	"	"	"	"	"	"	"
		136	"						"						"	"	$\overline{GI}$ to B3	"	"	"	"	"	"	"
		137	"						"						"	"	$\overline{GI}$ to B4	"	"	"	"	"	"	"
		138	4.5 V		OUT	OUT	OUT	OUT	"			4.5 V	4.5 V		IN	"	G2 to A1	"	"	"	"	"	"	"
		139	"						"						"	"	G2 to A2	"	"	"	"	"	"	"
		140	"						"		4.5 V				"	"	G2 to A3	"	"	"	"	"	"	"
		141	"						"	4.5 V					"	"	G2 to A4	"	"	"	"	"	"	"
t_{PLZ1} 9/	3003 (Fig. 4)	142	IN		GND	GND	GND	GND	"	OUT	OUT	OUT	OUT		GND	"	$\overline{GI}$ to B1	"	"	"	"	"	"	"
		143	"						"						"	"	$\overline{GI}$ to B2	"	"	"	"	"	"	"
		144	"						"						"	"	$\overline{GI}$ to B3	"	"	"	"	"	"	"
		145	"						"						"	"	$\overline{GI}$ to B4	"	"	"	"	"	"	"
		146	4.5 V		OUT	OUT	OUT	GND	"			GND	GND		IN	"	G2 to A1	"	"	"	"	"	"	"
		147	"						"						"	"	G2 to A2	"	"	"	"	"	"	"
		148	"						"		GND				"	"	G2 to A3	"	"	"	"	"	"	"
		149	"					OUT	"	GND					"	"	G2 to A4	"	"	"	"	"	"	"

See footnotes at end of table.

TABLE III. Group A inspection for device type 03.

Symbol	MIL-STD-883 method	Cases 2, R	Terminal conditions 1/																				Measured terminal	Test limits						Unit
			1	2	3	4	5	6	7	8	9	10	11	12	13	14	15	16	17	18	19	20		Subgroup 1 T_C = +25°C		Subgroup 2 T_C = +125°C		Subgroup 3 T_C = -55°C		
		Test no.	DIR	A1	A2	A3	A4	A5	A6	A7	A8	GND	B8	B7	B6	B5	B4	B3	B2	B1	G	V_{CC}		Min	Max	Min	Max	Min	Max	
V_{IC} (pos)		1	1 mA									1/										GND	DIR	0.4	1.5					V
		2		1 mA								"										"	A1	"	"					"
		3			1 mA							"										"	A2	"	"					"
		4				1 mA						"										"	A3	"	"					"
		5					1 mA					"										"	A4	"	"					"
		6						1 mA				"										"	A5	"	"					"
		7							1 mA			"										"	A6	"	"					"
		8								1 mA		"										"	A7	"	"					"
		9									1 mA	"										"	A8	"	"					"
		10										"	1 mA									"	B8	"	"					"
		11										"		1 mA								"	B7	"	"					"
		12										"			1 mA							"	B6	"	"					"
		13										"				1 mA						"	B5	"	"					"
		14										"					1 mA					"	B4	"	"					"
		15										"						1 mA				"	B3	"	"					"
		16										"							1 mA			"	B2	"	"					"
		17										"								1 mA		"	B1	"	"					"
		18										"									1 mA	"	G	"	"					"
V_{IC} (neg)		19	-1 mA									"										1/	DIR		-1.5					"
		20		-1 mA								"										"	A1		"					"
		21			-1 mA							"										"	A2		"					"
		22				-1 mA						"										"	A3		"					"
		23					-1 mA					"										"	A4		"					"
		24						-1 mA				"										"	A5		"					"
		25							-1 mA			"										"	A6		"					"
		26								-1 mA		"										"	A7		"					"
		27									-1 mA	"										"	A8		"					"
		28										"	-1 mA									"	B8		"					"
		29										"		-1 mA								"	B7		"					"
		30										"			-1 mA							"	B6		"					"
		31										"				-1 mA						"	B5		"					"
		32										"					-1 mA					"	B4		"					"
		33										"						-1 mA				"	B3		"					"
		34										"							-1 mA			"	B2		"					"
		35										"								-1 mA		"	B1		"					"
		36										"									-1 mA	"	G		"					"
I_{CC}	3005	37	GND									GND	GND	6 V	GND	6 V	GND	6 V	GND	6 V	GND	6 V	V_{CC}		.2		20			μA
		38	GND									"	6 V	6 V	6 V	6 V	6 V	6 V	6 V	6 V	"	"	"		"		"			"
		39	6 V	GND	6 V	GND	6 V	GND	6 V	GND	6 V	"									"	"	"		"		"			"
		40	6 V	6 V	6 V	6 V	6 V	6 V	6 V	6 V	6 V	"									"	"	"		"		"			"
I_{CCZ}		41	GND									"									6 V	"	"		"		10			"

See footnotes at end of table.

TABLE III. Group A inspection for device type 03 - Continued.

Symbol	MIL-STD-883 method	Cases 2, R	Terminal conditions 1/																				Measured terminal	Test limits						Unit
			1	2	3	4	5	6	7	8	9	10	11	12	13	14	15	16	17	18	19	20		Subgroup 1 T_C = +25°C		Subgroup 2 T_C = +125°C		Subgroup 3 T_C = -55°C		
		Test no.	DIR	A1	A2	A3	A4	A5	A6	A7	A8	GND	B8	B7	B6	B5	B4	B3	B2	B1	G	V_{CC}		Min	Max	Min	Max	Min	Max	
V_{OH3}	3006	42	1.2 V	-20 μA								GND								4.2 V	1.2 V	6 V	A1	5.95		5.95		5.95		V
		43	"		-20 μA							"							4.2 V		"	"	A2	"		"		"		"
		44	"			-20 μA						"						4.2 V			"	"	A3	"		"		"		"
		45	"				-20 μA					"					4.2 V				"	"	A4	"		"		"		"
		46	"					-20 μA				"				4.2 V					"	"	A5	"		"		"		"
		47	"						-20 μA			"			4.2 V						"	"	A6	"		"		"		"
		48	"							-20 μA		"		4.2 V							"	"	A7	"		"		"		"
		49	"								-20 μA	"	4.2 V								"	"	A8	"		"		"		"
		50	4.2 V	4.2 V								"								-20 μA	"	"	B1	"		"		"		"
		51	"		4.2 V							"							-20 μA		"	"	B2	"		"		"		"
		52	"			4.2 V						"						-20 μA			"	"	B3	"		"		"		"
		53	"				4.2 V					"					-20 μA				"	"	B4	"		"		"		"
		54	"					4.2 V				"				-20 μA					"	"	B5	"		"		"		"
		55	"						4.2 V			"			-20 μA						"	"	B6	"		"		"		"
		56	"							4.2 V		"		-20 μA							"	"	B7	"		"		"		"
		57	"								4.2 V	"	-20 μA								"	"	B8	"		"		"		"
V_{OH5}	3006	58	1.2 V	-7.8 mA								"								4.2 V	"	"	A1	5.48		5.2		5.48		"
		59	"		-7.8 mA							"							4.2 V		"	"	A2	"		"		"		"
		60	"			-7.8 mA						"						4.2 V			"	"	A3	"		"		"		"
		61	"				-7.8 mA					"					4.2 V				"	"	A4	"		"		"		"
		62	"					-7.8 mA				"				4.2 V					"	"	A5	"		"		"		"
		63	"						-7.8 mA			"			4.2 V						"	"	A6	"		"		"		"
		64	"							-7.8 mA		"		4.2 V							"	"	A7	"		"		"		"
		65	"								-7.8 mA	"	4.2 V								"	"	A8	"		"		"		"
		66	4.2 V	4.2 V								"								-7.8 mA	"	"	B1	"		"		"		"
		67	"		4.2 V							"							-7.8 mA		"	"	B2	"		"		"		"
		68	"			4.2 V						"						-7.8 mA			"	"	B3	"		"		"		"
		69	"				4.2 V					"					-7.8 mA				"	"	B4	"		"		"		"
		70	"					4.2 V				"				-7.8 mA					"	"	B5	"		"		"		"
		71	"						4.2 V			"			-7.8 mA						"	"	B6	"		"		"		"
		72	"							4.2 V		"		-7.8 mA							"	"	B7	"		"		"		"
		73	"								4.2 V	"	-7.8 mA								"	"	B8	"		"		"		"
V_{OL3}	3007	74	1.2 V	20 μA								"							1.2 V	1.2 V	"	"	A1		.05		.05		.05	"
		75	"		20 μA							"						1.2 V			"	"	A2		"		"		"	"
		76	"			20 μA						"									"	"	A3		"		"		"	"
		77	"				20 μA					"					1.2 V				"	"	A4		"		"		"	"
		78	"					20 μA				"				1.2 V					"	"	A5		"		"		"	"
		79	"						20 μA			"			1.2 V						"	"	A6		"		"		"	"
		80	"							20 μA		"		1.2 V							"	"	A7		"		"		"	"
		81	"								20 μA	"	1.2 V								"	"	A8		"		"		"	"
		82	4.2 V	1.2 V								"								20 μA	"	"	B1		"		"		"	"
		83	"		1.2 V							"							20 μA		"	"	B2		"		"		"	"
		84	"			1.2 V						"						20 μA			"	"	B3		"		"		"	"
		85	"				1.2 V					"					20 μA				"	"	B4		"		"		"	"
		86	"					1.2 V				"				20 μA					"	"	B5		"		"		"	"
		87	"						1.2 V			"			20 μA						"	"	B6		"		"		"	"
		88	"							1.2 V		"		20 μA							"	"	B7		"		"		"	"
		89	"								1.2 V	"	20 μA								"	"	B8		"		"		"	"

See footnotes at end of table.

TABLE III. Group A inspection for device type 03 - Continued.

Symbol	MIL-STD-883 method	Cases 2, R	Terminal conditions 1/																				Measured terminal	Test limits						Unit
			1	2	3	4	5	6	7	8	9	10	11	12	13	14	15	16	17	18	19	20		Subgroup 1 T_C = +25°C		Subgroup 2 T_C = +125°C		Subgroup 3 T_C = -55°C		
		Test no.	OIR	A1	A2	A3	A4	A5	A6	A7	A8	GND	B8	B7	B6	B5	B4	B3	B2	B1	E	V_{CC}		Min	Max	Min	Max	Min	Max	
V_{OL5}	3007	90	1.2 V	7.8 mA								GND								1.2 V	1.2 V	6 V	A1		0.26		0.4		0.26	V
		91	"		7.8 mA							"							1.2 V		"	"	A2		"		"		"	"
		92	"			7.8 mA						"						1.2 V			"	"	A3		"		"		"	"
		93	"				7.8 mA					"					1.2 V				"	"	A4		"		"		"	"
		94	"					7.8 mA				"				1.2 V					"	"	A5		"		"		"	"
		95	"						7.8 mA			"			1.2 V						"	"	A6		"		"		"	"
		96	"							7.8 mA		"		1.2 V							"	"	A7		"		"		"	"
		97	"								7.8 mA	"	1.2 V								"	"	A8		"		"		"	"
		98	4.2 V	1.2 V								"								7.8 mA	"	"	B1		"		"		"	"
		99	"		1.2 V							"							7.8 mA		"	"	B2		"		"		"	"
		100	"			1.2 V						"						7.8 mA			"	"	B3		"		"		"	"
		101	"				1.2 V					"					7.8 mA				"	"	B4		"		"		"	"
		102	"					1.2 V				"				7.8 mA					"	"	B5		"		"		"	"
		103	"						1.2 V			"			7.8 mA						"	"	B6		"		"		"	"
		104	"							1.2 V		"		7.8 mA							"	"	B7		"		"		"	"
		105	"								1.2 V	"	7.8 mA								"	"	B8		"		"		"	"
I_{OS4}	3011	106	GND	GND								"								4 V	GND	4 V	A1	-10	-135	-10	-135	-10	-135	mA
		107	"		GND							"							4 V		"	"	A2	"	"	"	"	"	"	"
		108	"			GND						"						4 V			"	"	A3	"	"	"	"	"	"	"
		109	"				GND					"					4 V				"	"	A4	"	"	"	"	"	"	"
		110	"					GND				"				4 V					"	"	A5	"	"	"	"	"	"	"
		111	"						GND			"			4 V						"	"	A6	"	"	"	"	"	"	"
		112	"							GND		"		4 V							"	"	A7	"	"	"	"	"	"	"
		113	"								GND	"	4 V								"	"	A8	"	"	"	"	"	"	"
		114	4 V	4 V								"								GND	"	"	B1	"	"	"	"	"	"	"
		115	"		4 V							"							GND		"	"	B2	"	"	"	"	"	"	"
		116	"			4 V						"						GND			"	"	B3	"	"	"	"	"	"	"
		117	"				4 V					"					GND				"	"	B4	"	"	"	"	"	"	"
		118	"					4 V				"				GND					"	"	B5	"	"	"	"	"	"	"
		119	"						4 V			"			GND						"	"	B6	"	"	"	"	"	"	"
		120	"							4 V		"		GND							"	"	B7	"	"	"	"	"	"	"
		121	"								4 V	"	GND								"	"	B8	"	"	"	"	"	"	"
I_{IH}/ I_{OZH}		122	1.2 V	6 V								"								2/	2/	6 V	A1		1		2.0			μA
		123	"		6 V							"							2/		"	"	A2		"		"			"
		124	"			6 V						"						2/			"	"	A3		"		"			"
		125	"				6 V					"					2/				"	"	A4		"		"			"
		126	"					6 V				"				2/					"	"	A5		"		"			"
		127	"						6 V			"			2/						"	"	A6		"		"			"
		128	"							6 V		"		2/							"	"	A7		"		"			"
		129	"								6 V	"	2/								"	"	A8		"		"			"
		130	4.2 V	2/								"								6 V	"	"	B1		"		"			"
		131	"		2/							"							6 V		"	"	B2		"		"			"
		132	"			2/						"						6 V			"	"	B3		"		"			"
		133	"				2/					"					6 V				"	"	B4		"		"			"
		134	"					2/				"				6 V					"	"	B5		"		"			"
		135	"						2/			"			6 V						"	"	B6		"		"			"
		136	"							2/		"		6 V							"	"	B7		"		"			"
		137	"								2/	"	6 V								"	"	B8		"		"			"

See footnotes at end of table.

TABLE III. Group A inspection for device type 03 - Continued.

Symbol	MIL-STD-883 method	Cases 2, R	Terminal conditions 1/																				Measured terminal	Test limits						Unit
			1	2	3	4	5	6	7	8	9	10	11	12	13	14	15	16	17	18	19	20		Subgroup 1 T_C = +25°C		Subgroup 2 T_C = +125°C		Subgroup 3 T_C = -55°C		
		Test no.	DIR	A1	A2	A3	A4	A5	A6	A7	A8	GND	B8	B7	B6	B5	B4	B3	B2	B1	G	V_{CC}		Min	Max	Min	Max	Min	Max	
I_{IL}/ I_{OZL}		138	1.2 V	GND								GND								2/	2/	6 V	A1		-.1		-2.0			µA
		139	"		GND							"							2/		"	"	A2		"		"			"
		140	"			GND						"						2/			"	"	A3		"		"			"
		141	"				GND					"					2/				"	"	A4		"		"			"
		142	"					GND				"				2/					"	"	A5		"		"			"
		143	"						GND			"			2/						"	"	A6		"		"			"
		144	"							GND		"		2/							"	"	A7		"		"			"
		145	"								GND	"	2/								"	"	A8		"		"			"
		146	4.2 V	2/								"								GND	"	"	B1		"		"			"
		147	"		2/							"							GND		"	"	B2		"		"			"
		148	"			2/						"						GND			"	"	B3		"		"			"
		149	"				2/					"					GND				"	"	B4		"		"			"
		150	"					2/				"				GND					"	"	B5		"		"			"
		151	"						2/			"			GND						"	"	B6		"		"			"
		152	"							2/		"		GND							"	"	B7		"		"			"
		153	"								2/	"	GND								"	"	B8		"		"			"
I_{IH}	3010	154	6 V									"										"	DIR		.05		.1			"
		155										"									6 V	"	G		.05		.1			"
I_{IL}	3009	156	GND									"										"	DIR		-.05		-.1			"
		157										"									GND	"	G		-.05		-.1			"
$C_{I/O}$		158	GND	3/								"									6 V	"	A1		20					pF
		159	"		3/							"									"	"	A2		"					"
		160	"			3/						"									"	"	A3		"					"
		161	"				3/					"									"	"	A4		"					"
		162	"					3/				"									"	"	A5		"					"
		163	"						3/			"									"	"	A6		"					"
		164	"							3/		"									"	"	A7		"					"
		165	"								3/	"									"	"	A8		"					"
		166	6 V									"	3/								"	"	B8		"					"
		167	"									"		3/							"	"	B7		"					"
		168	"									"			3/						"	"	B6		"					"
		169	"									"				3/					"	"	B5		"					"
		170	"									"					3/				"	"	B4		"					"
		171	"									"						3/			"	"	B3		"					"
		172	"									"							3/		"	"	B2		"					"
		173	"									"								3/	"	"	B1		"					"
C_C		174	3/									"										GND	DIR		10					"
		175										"									3/	GND	G		10					"
																								Test limits						Unit
																								Subgroup 7 T_C = +25°C		Subgroup 8 T_C = +125°C		Subgroup 9 T_C = -55°C		
																								Min	Max	Min	Max	Min	Max	
Truth table tests 5/		176	A	A	A	A	A	A	A	A	A	"	H	H	H	H	H	H	H	H	B	4.5 V	6/							
		177	A	B	B	B	B	B	B	B	B	"	L	L	L	L	L	L	L	L	B	"	"							
		178	B	H	H	H	H	H	H	H	H	"	A	A	A	A	A	A	A	A	B	"	"							
		179	B	L	L	L	L	L	L	L	L	"	B	B	B	B	B	B	B	B	B	"	"							
		180	B	Z	Z	Z	Z	Z	Z	Z	Z	"	Z	Z	Z	Z	Z	Z	Z	Z	A	"	7/							

See footnotes at end of table.

TABLE III. Group A inspection for device type 03 - Continued.

Symbol	MIL-STD-883 method	Cases 2, R	Terminal conditions 1/																				Measured terminal	Test limits						Unit
			1	2	3	4	5	6	7	8	9	10	11	12	13	14	15	16	17	18	19	20		Subgroup 9 T_C = +25°C 4/		Subgroup 10 T_C = +125°C		Subgroup 11 T_C = -55°C 4/		
		Test no.	DIR	A1	A2	A3	A4	A5	A6	A7	A8	GND	B4	B7	B6	B5	B4	B3	B2	B1	E	V_{CC}		Min	Max	Min	Max	Min	Max	
t_{THL}	3004 (Fig. 4)	181	GND	OUT								GND								IN	GND	4.5 V	A1	2	12	2	16	2	12	ns
		182	"		OUT							"							IN		"	"	A2	"	"	"	"	"	"	"
		183	"			OUT						"						IN			"	"	A3	"	"	"	"	"	"	"
		184	"				OUT					"					IN				"	"	A4	"	"	"	"	"	"	"
		185	"					OUT				"				IN					"	"	A5	"	"	"	"	"	"	"
		186	"						OUT			"			IN						"	"	A6	"	"	"	"	"	"	"
		187	"							OUT		"		IN							"	"	A7	"	"	"	"	"	"	"
		188	"								OUT	"	IN								"	"	A8	"	"	"	"	"	"	"
		189	4.5 V	IN								"								OUT	"	"	B1	"	"	"	"	"	"	"
		190	"		IN							"							OUT		"	"	B2	"	"	"	"	"	"	"
		191	"			IN						"						OUT			"	"	B3	"	"	"	"	"	"	"
		192	"				IN					"					OUT				"	"	B4	"	"	"	"	"	"	"
		193	"					IN				"				OUT					"	"	B5	"	"	"	"	"	"	"
		194	"						IN			"			OUT						"	"	B6	"	"	"	"	"	"	"
		195	"							IN		"		OUT							"	"	B7	"	"	"	"	"	"	"
		196	"								IN	"	OUT								"	"	B8	"	"	"	"	"	"	"
t_{TLH}	3004 (Fig. 4)	197 to 212	Same tests, terminal conditions, and limits as specified above for t_{THL}.																					2	12	2	16	2	12	ns
t_{PHL2}	3003 (Fig. 4)	213	4.5 V	IN	IN							GND								OUT	GND	4.5 V	A1 to B1	4	25	4	33	4	25	ns
		214	"			IN						"						OUT	OUT		"	"	A2 to B2	"	"	"	"	"	"	"
		215	"				IN					"					OUT				"	"	A3 to B3	"	"	"	"	"	"	"
		216	"					IN				"				OUT					"	"	A4 to B4	"	"	"	"	"	"	"
		217	"						IN			"			OUT						"	"	A5 to B5	"	"	"	"	"	"	"
		218	"							IN		"		OUT							"	"	A6 to B6	"	"	"	"	"	"	"
		219	"								IN	"	OUT								"	"	A7 to B7	"	"	"	"	"	"	"
		220	"									"									"	"	A8 to B8	"	"	"	"	"	"	"
		221	GND	OUT								"								IN	"	"	B1 to A1	"	"	"	"	"	"	"
		222	"		OUT							"							IN		"	"	B2 to A2	"	"	"	"	"	"	"
		223	"			OUT						"						IN			"	"	B3 to A3	"	"	"	"	"	"	"
		224	"				OUT					"					IN				"	"	B4 to A4	"	"	"	"	"	"	"
		225	"					OUT				"				IN					"	"	B5 to A5	"	"	"	"	"	"	"
		226	"						OUT			"			IN						"	"	B6 to A6	"	"	"	"	"	"	"
		227	"							OUT		"		IN							"	"	B7 to A7	"	"	"	"	"	"	"
		228	"								OUT	"	IN								"	"	B8 to A8	"	"	"	"	"	"	"
t_{PLH2}	3003 (Fig. 4)	229 to 244	Same terminal conditions and measured terminals as specified above for t_{PHL2}.																					4	25	4	33	4	25	ns

See footnotes at end of table.

TABLE III. Group A inspection for device type 03 - Continued.

Symbol	MIL-STD-883 method	Cases 2, N	Terminal conditions 1/																				Measured terminal	Test limits						Unit
			1	2	3	4	5	6	7	8	9	10	11	12	13	14	15	16	17	18	19	20		Subgroup 9 T_C = +25°C 4/		Subgroup 10 T_C = +125°C		Subgroup 11 T_C = -55°C 4/		
		Test no.	DIR	A1	A2	A3	A4	A5	A6	A7	A8	GND	B8	B7	B6	B5	B4	B3	B2	B1	$\overline{G}$	V_{CC}		Min	Max	Min	Max	Min	Max	
t_{PZH1} 10/	3003 (Fig. 4)	245	GND	OUT								GND								4.5 V	IN	4.5 V	IG to A1	9	44	9	59	9	44	ns
		246	"		OUT							"							4.5 V		"	"	IG to A2	"	"	"	"	"	"	"
		247	"			OUT						"						4.5 V			"	"	IG to A3	"	"	"	"	"	"	"
		248	"				OUT					"									"	"	IG to A4	"	"	"	"	"	"	"
		249	"					OUT				"				4.5 V	4.5 V				"	"	IG to A5	"	"	"	"	"	"	"
		250	"						OUT			"			4.5 V						"	"	IG to A6	"	"	"	"	"	"	"
		251	"							OUT		"		4.5 V							"	"	IG to A7	"	"	"	"	"	"	"
		252	"								OUT	"	4.5 V								"	"	IG to A8	"	"	"	"	"	"	"
		253	4.5 V	4.5 V								"								OUT	"	"	IG to B1	"	"	"	"	"	"	"
		254	"		4.5 V							"							OUT		"	"	IG to B2	"	"	"	"	"	"	"
		255	"			4.5 V						"						OUT			"	"	IG to B3	"	"	"	"	"	"	"
		256	"				4.5 V					"					OUT				"	"	IG to B4	"	"	"	"	"	"	"
		257	"					4.5 V				"				OUT					"	"	IG to B5	"	"	"	"	"	"	"
		258	"						4.5 V			"			OUT						"	"	IG to B6	"	"	"	"	"	"	"
		259	"							4.5 V		"		OUT							"	"	IG to B7	"	"	"	"	"	"	"
		260	"								4.5 V	"	OUT								"	"	IG to B8	"	"	"	"	"	"	"
t_{PHZ1} 10/	3003 (Fig. 4)	261 to 276	Same terminal conditions and measured terminals as specified above for t_{PZH1}.																					8	41	8	54	8	41	"
t_{PZL1} 9/	3003 (Fig. 4)	277	GND	OUT								GND								GND	IN	4.5 V	IG to A1	9	44	9	59	9	44	"
		278	"		OUT							"							GND		"	"	IG to A2	"	"	"	"	"	"	"
		279	"			OUT						"						GND			"	"	IG to A3	"	"	"	"	"	"	"
		280	"				OUT					"					GND				"	"	IG to A4	"	"	"	"	"	"	"
		281	"					OUT				"				GND					"	"	IG to A5	"	"	"	"	"	"	"
		282	"						OUT			"			GND						"	"	IG to A6	"	"	"	"	"	"	"
		283	"							OUT		"		GND							"	"	IG to A7	"	"	"	"	"	"	"
		284	"								OUT	"	GND								"	"	IG to A8	"	"	"	"	"	"	"
		285	6 V	GND								"								OUT	"	"	IG to B1	"	"	"	"	"	"	"
		286	"		GND							"							OUT		"	"	IG to B2	"	"	"	"	"	"	"
		287	"			GND						"						OUT			"	"	IG to B3	"	"	"	"	"	"	"
		288	"				GND					"					OUT				"	"	IG to B4	"	"	"	"	"	"	"
		289	"					GND				"				OUT					"	"	IG to B5	"	"	"	"	"	"	"
		290	"						GND			"			OUT						"	"	IG to B6	"	"	"	"	"	"	"
		291	"							GND		"		OUT							"	"	IG to B7	"	"	"	"	"	"	"
		292	"								GND	"	OUT								"	"	IG to B8	"	"	"	"	"	"	"
t_{PLZ1} 9/	3003 (Fig. 4)	293 to 308	Same terminal conditions and measured terminals as specified above for t_{PZL1}.																					8	41	8	54	8	41	"

See footnotes at end of table.

TABLE III. Group A inspection for device type 06.

Symbol	MIL-STD-883 method	Cases 2, R	Terminal conditions 1/																				Measured terminal	Test limits						Unit
			1	2	3	4	5	6	7	8	9	10	11	12	13	14	15	16	17	18	19	20		Subgroup 1 T_C = +25°C		Subgroup 2 T_C = +125°C		Subgroup 3 T_C = -55°C		
		Test no.	DIR	A1	A2	A3	A4	A5	A6	A7	A8	GND	B8	B7	B6	B5	B4	B3	B2	B1	$\overline{G}$	V_{CC}		Min	Max	Min	Max	Min	Max	
V_{IC} (pos)		1		1 mA								1/										GND	A1	1/ 0.4	1.5					V
		2			1 mA							"										"	A2	"	"					"
		3				1 mA						"										"	A3	"	"					"
		4					1 mA					"										"	A4	"	"					"
		5						1 mA				"										"	A5	"	"					"
		6							1 mA			"										"	A6	"	"					"
		7								1 mA		"										"	A7	"	"					"
		8									1 mA	"										"	A8	"	"					"
		9										"	1 mA									"	B8	"	"					"
		10										"		1 mA								"	B7	"	"					"
		11										"			1 mA							"	B6	"	"					"
		12										"				1 mA						"	B5	"	"					"
		13										"					1 mA					"	B4	"	"					"
		14										"						1 mA				"	B3	"	"					"
		15										"							1 mA			"	B2	"	"					"
		16										"								1 mA		"	B1	"	"					"
V_{IC} (neg)		17		-1 mA								GND										1/	A1		-1.5					"
		18			-1 mA							"										"	A2		"					"
		19				-1 mA						"										"	A3		"					"
		20					-1 mA					"										"	A4		"					"
		21						-1 mA				"										"	A5		"					"
		22							-1 mA			"										"	A6		"					"
		23								-1 mA		"										"	A7		"					"
		24									-1 mA	"										"	A8		"					"
		25										"	-1 mA									"	B8		"					"
		26										"		-1 mA								"	B7		"					"
		27										"			-1 mA							"	B6		"					"
		28										"				-1 mA						"	B5		"					"
		29										"					-1 mA					"	B4		"					"
		30										"						-1 mA				"	B3		"					"
		31										"							-1 mA			"	B2		"					"
		32										"								-1 mA		"	B1		"					"
I_{CC}	3005	33	6 V	6 V	GND	6 V	GND	6 V	GND	6 V	GND	"									GND	6 V	V_{CC}		.2		20			μA
		34	"	6 V	6 V	6 V	6 V	6 V	6 V	6 V	6 V	"									"	"			"		"			"
		35	"									"	GND	6 V	GND	6 V	GND	6 V	GND	6 V	"	"			"		"			"
		36	"									"	6 V	6 V	6 V	6 V	6 V	6 V	6 V	6 V	"	"			"		"			"
I_{CCZ}	3005	37	"									"									6 V	"	"		"		10			"

See footnotes at end of table.

TABLE III. Group A inspection for device type 06 - Continued.

Symbol	MIL-STD-883 method	Cases 2, 4	Terminal conditions 1/																				Measured terminal	Test limits						Unit
			1	2	3	4	5	6	7	8	9	10	11	12	13	14	15	16	17	18	19	20		Subgroup 1 T_C = +25°C		Subgroup 2 T_C = +125°C		Subgroup 3 T_C = -55°C		
		Test no.	DIR	A1	A2	A3	A4	A5	A6	A7	A8	GND	B8	B7	B6	B5	B4	B3	B2	B1	E	V_{CC}		Min	Max	Min	Max	Min	Max	
V_{OH3}	3006	38	1.2 V	-20 µA								GND								1.2 V	1.2 V	6 V	A1	5.95		5.95		5.95		V
		39	"		-20 µA							"							1.2 V		"	"	A2	"		"		"		"
		40	"			-20 µA						"						1.2 V			"	"	A3	"		"		"		"
		41	"				-20 µA					"					1.2 V				"	"	A4	"		"		"		"
		42	"					-20 µA				"				1.2 V					"	"	A5	"		"		"		"
		43	"						-20 µA			"			1.2 V						"	"	A6	"		"		"		"
		44	"							-20 µA		"		1.2 V							"	"	A7	"		"		"		"
		45	"								-20 µA	"	1.2 V								"	"	A8	"		"		"		"
		46	4.2 V	1.2 V								"								-20 µA	"	"	B1	"		"		"		"
		47	"		1.2 V							"							-20 µA		"	"	B2	"		"		"		"
		48	"			1.2 V						"						-20 µA			"	"	B3	"		"		"		"
		49	"				1.2 V					"					-20 µA				"	"	B4	"		"		"		"
		50	"					1.2 V				"				-20 µA					"	"	B5	"		"		"		"
		51	"						1.2 V			"			-20 µA						"	"	B6	"		"		"		"
		52	"							1.2 V		"		-20 µA							"	"	B7	"		"		"		"
		53	"								1.2 V	"	-20 µA								"	"	B8	"		"		"		"
V_{OH5}	3006	54 to 69	Same tests and terminal conditions as for V_{OH3} except I_{OH} = -7.8 mA.																					5.48		5.2		5.48		"
V_{OL3}	3007	70	1.2 V	20 µA								"								4.2 V	"	"	A1		.05		.05		.05	"
		71	"		20 µA							"							4.2 V		"	"	A2		"		"		"	"
		72	"			20 µA						"						4.2 V			"	"	A3		"		"		"	"
		73	"				20 µA					"					4.2 V				"	"	A4		"		"		"	"
		74	"					20 µA				"				4.2 V					"	"	A5		"		"		"	"
		75	"						20 µA			"			4.2 V						"	"	A6		"		"		"	"
		76	"							20 µA		"		4.2 V							"	"	A7		"		"		"	"
		77	"								20 µA	"	4.2 V								"	"	A8		"		"		"	"
		78	4.2 V	4.2 V								"								20 µA	"	"	B1		"		"		"	"
		79	"		4.2 V							"							20 µA		"	"	B2		"		"		"	"
		80	"			4.2 V						"						20 µA			"	"	B3		"		"		"	"
		81	"				4.2 V					"					20 µA				"	"	B4		"		"		"	"
		82	"					4.2 V				"				20 µA					"	"	B5		"		"		"	"
		83	"						4.2 V			"			20 µA						"	"	B6		"		"		"	"
		84	"							4.2 V		"		20 µA							"	"	B7		"		"		"	"
		85	"								4.2 V	"	20 µA								"	"	B8		"		"		"	"
V_{OL5}	3007	86 to 101	Same tests and terminal conditions as for V_{OL3} except I_{OH} = 7.8 mA.																						0.26		0.4		0.26	"
I_{OS4}	3011	102	GND	GND								"								GND	GND	4 V	A1	-10	-135	-10	-135	-10	-135	mA
		103	"		GND							"							GND		"	"	A2	"	"	"	"	"	"	"
		104	"			GND						"						GND			"	"	A3	"	"	"	"	"	"	"
		105	"				GND					"					GND				"	"	A4	"	"	"	"	"	"	"
		106	"					GND				"				GND					"	"	A5	"	"	"	"	"	"	"
		107	"						GND			"			GND						"	"	A6	"	"	"	"	"	"	"
		108	"							GND		"		GND							"	"	A7	"	"	"	"	"	"	"
		109	"								GND	"	GND								"	"	A8	"	"	"	"	"	"	"
		110	4 V	GND								"								GND	"	"	B1	"	"	"	"	"	"	"
		111	"		GND							"							GND		"	"	B2	"	"	"	"	"	"	"
		112	"			GND						"						GND			"	"	B3	"	"	"	"	"	"	"
		113	"				GND					"					GND				"	"	B4	"	"	"	"	"	"	"
		114	"					GND				"				GND					"	"	B5	"	"	"	"	"	"	"
		115	"						GND			"			GND						"	"	B6	"	"	"	"	"	"	"
		116	"							GND		"		GND							"	"	B7	"	"	"	"	"	"	"
		117	"								GND	"	GND								"	"	B8	"	"	"	"	"	"	"

See footnotes at end of table.

TABLE III. Group A inspection for device type 06 - Continued.

Symbol	MIL-STD-883 method	Cases 2, R	Terminal conditions 1/																				Measured terminal	Test limits						Unit
			1	2	3	4	5	6	7	8	9	10	11	12	13	14	15	16	17	18	19	20		Subgroup 1 T_C = +25°C		Subgroup 2 T_C = +125°C		Subgroup 3 T_C = -55°C		
		Test no.	DIR	A1	A2	A3	A4	A5	A6	A7	A8	GND	B8	B7	B6	B5	B4	B3	B2	B1	G	V_{CC}		Min	Max	Min	Max	Min	Max	
I_{IH}/ I_{OZH}	3010	118	1.2 V	6 V								GND								2/	2/	6 V	A1		.1		2.0			µA
		119	"		6 V							"							2/		"	"	A2		"		"			"
		120	"			6 V						"						2/			"	"	A3		"		"			"
		121	"				6 V					"					2/				"	"	A4		"		"			"
		122	"					6 V				"				2/					"	"	A5		"		"			"
		123	"						6 V			"			2/						"	"	A6		"		"			"
		124	"							6 V		"		2/							"	"	A7		"		"			"
		125	"								6 V 2/	"	2/ 6 V								"	"	A4		"		"			"
		126	4.2 V							2/		"		6 V							"	"	B4		"		"			"
		127	"						2/			"			6 V						"	"	B7		"		"			"
		128	"					2/				"				6 V					"	"	B6		"		"			"
		129	"				2/					"					6 V				"	"	B5		"		"			"
		130	"			2/						"						6 V			"	"	B4		"		"			"
		131	"		2/							"							6 V		"	"	B3		"		"			"
		132	"	2/								"								6 V	"	"	B2		"		"			"
		133	"									"									"	"	B1		"		"			"
I_{IH}		134	6 V									"										"	DIR		.05		0.1			"
		135										"									6 V	"	G		.05		0.1			"
I_{IL}/ I_{OZL}	3010	136	6 V	GND								"								2/	GND	6 V	A1		-.1		-2.0			"
		137	"		GND							"							2/		"	"	A2		"		"			"
		138	"			GND						"						2/			"	"	A3		"		"			"
		139	"				GND					"					2/				"	"	A4		"		"			"
		140	"					GND				"				2/					"	"	A5		"		"			"
		141	"						GND			"			2/						"	"	A6		"		"			"
		142	"							GND		"		2/							"	"	A7		"		"			"
		143	"								GND 2/	"	2/ GND								"	"	A4		"		"			"
		144	GND							2/		"		GND							"	"	B8		"		"			"
		145	"						2/			"			GND						"	"	B7		"		"			"
		146	"					2/				"				GND					"	"	B6		"		"			"
		147	"				2/					"					GND				"	"	B5		"		"			"
		148	"			2/						"						/ GND			"	"	B4		"		"			"
		149	"		2/							"							GND		"	"	B3		"		"			"
		150	"	2/								"								GND	"	"	B2		"		"			"
		151	"									"									"	"	B1		"		"			"
I_{IL}		152	GND									"										"	DIR		-.05		-0.1			"
		153										"									GND	"	G		-.05		-0.1			"
																								Subgroup 4 T_C = +25°C						UNIT
																								Min	Max					
C_O		154	GND	3/								GND									6 V	6 V	A1		20					pF
		155	"		3/							"									"	"	A2		"					"
		156	"			3/						"									"	"	A3		"					"
		157	"				3/					"									"	"	A4		"					"
		158	"					3/				"									"	"	A5		"					"
		159	"						3/			"									"	"	A6		"					"
		160	"							3/		"									"	"	A7		"					"
		161	"								3/	"									"	"	A4		"					"
		162	6 V									"	3/								"	"	B3		"					"
		163	"									"		3/							"	"	B7		"					"
		164	"									"			3/						"	"	B6		"					"
		165	"									"				3/					"	"	B5		"					"
		166	"									"					3/				"	"	B4		"					"
		167	"									"						3/			"	"	B3		"					"
		168	"									"							3/		"	"	B2		"					"
		169	"									"								3/	"	"	B1		"					"
C_C		170	3/									"										GND	DIR		"					"
		171										"									3/	GND	G		"					"

See footnotes at end of table.

TABLE III. Group A inspection for device type 06 - Continued.

Symbol	MIL-STD-883 method	Cases 2, R	Terminal conditions 1/																					Measured terminal	Test limits						Unit
			1	2	3	4	5	6	7	8	9	10	11	12	13	14	15	16	17	18	19	20			Subgroup 7 T_C = +25°C		Subgroup 8 T_C = +125°C		Subgroup 8 T_C = -55°C		
		Test no.	DIR	A1	A2	A3	A4	A5	A6	A7	A8	GND	B8	B7	B6	B5	B4	B3	B2	B1	G	V_{CC}			Min	Max	Min	Max	Min	Max	
Truth table tests 5/	3014	172	A	A	A	A	A	A	A	A	A	"	L	L	L	L	L	L	L	L	B	4.5 V	6/								
		173	A	B	B	B	B	B	B	B	B	"	H	H	H	H	H	H	H	H	"	"										
		174	B	L	L	L	L	L	L	L	L	"	A	A	A	A	A	A	A	A	"	"										
		175	B	H	H	H	H	H	H	H	H	"	B	B	B	B	B	B	B	B	"	"										
																									Subgroup 9 T_C = +25°C 4/		Subgroup 10 T_C = +125°C		Subgroup 11 T_C = -55°C 4/		Unit
																									Min	Max	Min	Max	Min	Max	
t_{THL}	3004 (Fig. 4)	176	GND	OUT								"											A1	2	12	2	16	2	12	ns
		177	"		OUT							"											A2	"	"	"	"	"	"	"
		178	"			OUT						"						IN					A3	"	"	"	"	"	"	"
		179	"				OUT					"					IN						A4	"	"	"	"	"	"	"
		180	"					OUT				"				IN							A5	"	"	"	"	"	"	"
		181	"						OUT			"			IN								A6	"	"	"	"	"	"	"
		182	"							OUT		"		IN									A7	"	"	"	"	"	"	"
		183	"								OUT	"	IN										A8	"	"	"	"	"	"	"
		184	6 V	IN								"								OUT			B1	"	"	"	"	"	"	"
		185	"		IN							"							OUT				B2	"	"	"	"	"	"	"
		186	"			IN						"						OUT					B3	"	"	"	"	"	"	"
		187	"				IN					"					OUT						B4	"	"	"	"	"	"	"
		188	"					IN				"				OUT							B5	"	"	"	"	"	"	"
		189	"						IN			"			OUT								B6	"	"	"	"	"	"	"
		190	"							IN		"		OUT									B7	"	"	"	"	"	"	"
		191	"								IN	"	OUT										B8	"	"	"	"	"	"	"
t_{TLH}	3004 (Fig. 4)	192 to 207	Same tests, terminal conditions, and limits as specified above t_{THL}.																					"	"	"	"	"		"
t_{PHL2}	3003 (Fig. 4)	208	GND	OUT								GND											B1 to A1	4	20	4	26	4	20	ns
		209	"		OUT							"											B2 to A2	"	"	"	"	"	"	"
		210	"			OUT						"						IN					B3 to A3	"	"	"	"	"	"	"
		211	"				OUT					"					IN						B4 to A4	"	"	"	"	"	"	"
		212	"					OUT				"				IN							B5 to A5	"	"	"	"	"	"	"
		213	"						OUT			"			IN								B6 to A6	"	"	"	"	"	"	"
		214	"							OUT		"		IN									B7 to A7	"	"	"	"	"	"	"
		215	"								OUT	"	IN										B8 to A8	"	"	"	"	"	"	"
		216	4.5 V	IN								"								OUT			A1 to B1	"	"	"	"	"	"	"
		217	"		IN							"						IN					A2 to B2	"	"	"	"	"	"	"
		218	"			IN						"							OUT				A3 to B3	"	"	"	"	"	"	"
		219	"				IN					"					OUT						A4 to B4	"	"	"	"	"	"	"
		220	"					IN				"				OUT							A5 to B5	"	"	"	"	"	"	"
		221	"						IN			"			OUT								A6 to B6	"	"	"	"	"	"	"
		222	"							IN		"		OUT									A7 to B7	"	"	"	"	"	"	"
		223	"								IN	"	OUT										A8 to B8	"	"	"	"	"	"	"
t_{PLH2}	3003 (Fig. 4)	224 to 239	Same tests and terminal conditions as specified above t_{PHL1}.																					"	"	"	"	"	"	"

See footnotes at end of table.

TABLE III. Group A inspection for device type 06 - Continued.

Symbol	MIL-STD-883 method	Cases 2, R	Terminal conditions 1/																				Measured terminal	Test limits						Unit
			1	2	3	4	5	6	7	8	9	10	11	12	13	14	15	16	17	18	19	20		Subgroup 9 T_C = +25°C 4/		Subgroup 10 T_C = +125°C		Subgroup 11 T_C = -55°C 4/		
		Test no.	DIR	A1	A2	A3	A4	A5	A6	A7	A8	GND	B8	B7	B6	B5	B4	B3	B2	B1	$\overline{G}$	V_{CC}		Min	Max	Min	Max	Min	Max	
t_{PHZ2} 10/	3003 (Fig. 4)	240	GND	OUT								"							GND	GND	IN	"	G to A1	8	40	8	53	8	40	ns
		241	"		OUT							"									"	"	G to A2	"	"	"	"	"	"	"
		242	"			OUT						"						GND			"	"	G to A3	"	"	"	"	"	"	"
		243	"				OUT					"					GND				"	"	G to A4	"	"	"	"	"	"	"
		244	"					OUT				"				GND					"	"	G to A5	"	"	"	"	"	"	"
		245	"						OUT			"			GND						"	"	G to A6	"	"	"	"	"	"	"
		246	"							OUT		"		GND							"	"	G to A7	"	"	"	"	"	"	"
		247	"								OUT	"	GND								"	"	G to A8	"	"	"	"	"	"	"
		248	4.5 V	GND								"							OUT	OUT	"	"	G to B1	"	"	"	"	"	"	"
		249	"		GND							"									"	"	G to B2	"	"	"	"	"	"	"
		250	"			GND						"						OUT			"	"	G to B3	"	"	"	"	"	"	"
		251	"				GND					"					OUT				"	"	G to B4	"	"	"	"	"	"	"
		252	"					GND				"				OUT					"	"	G to B5	"	"	"	"	"	"	"
		253	"						GND			"			OUT						"	"	G to B6	"	"	"	"	"	"	"
		254	"							GND		"		OUT							"	"	G to B7	"	"	"	"	"	"	"
		255	"								GND	"	OUT								"	"	G to B8	"	"	"	"	"	"	"
t_{PZH2} 10/	3003 (Fig. 4)	256 to 271	Same tests and terminal conditions as specified above t_{PHZ}.																					9	44	9	59	9	44	"
t_{PLZ2} 9/	3003 (Fig. 4)	272	GND	OUT								"							4.5 V	4.5 V	IN	"	G to A1	8	40	8	53	8	40	"
		273	"		OUT							"									"	"	G to A2	"	"	"	"	"	"	"
		274	"			OUT						"						4.5 V			"	"	G to A3	"	"	"	"	"	"	"
		275	"				OUT					"					4.5 V				"	"	G to A4	"	"	"	"	"	"	"
		276	"					OUT				"				4.5 V					"	"	G to A5	"	"	"	"	"	"	"
		277	"						OUT			"			4.5 V						"	"	G to A6	"	"	"	"	"	"	"
		278	"							OUT		"		4.5 V							"	"	G to A7	"	"	"	"	"	"	"
		279	"								OUT	"	4.5 V								"	"	G to A8	"	"	"	"	"	"	"
		280	4.5 V	4.5 V								"								OUT	"	"	G to B1	"	"	"	"	"	"	"
		281	"		4.5 V							"							OUT		"	"	G to B2	"	"	"	"	"	"	"
		282	"			4.5 V						"						OUT			"	"	G to B3	"	"	"	"	"	"	"
		283	"				4.5 V					"					OUT				"	"	G to B4	"	"	"	"	"	"	"
		284	"					4.5 V				"				OUT					"	"	G to B5	"	"	"	"	"	"	"
		285	"						4.5 V			"			OUT						"	"	G to B6	"	"	"	"	"	"	"
		286	"							4.5 V		"		OUT							"	"	G to B7	"	"	"	"	"	"	"
		287	"								4.5 V	"	OUT								"	"	G to B8	"	"	"	"	"	"	"
t_{PZL2} 9/	3003 (Fig. 4)	288 to 303	Same tests and terminal conditions as specified above t_{PLZ}.																					9	44	9	59	9	44	"

See footnotes at end of table.

TABLE III. Group A inspection for device type 07.

Symbol	MIL-STD-883 method	Cases 2, R	Terminal conditions 1/																				Measured terminal	Test limits						Unit
			1	2	3	4	5	6	7	8	9	10	11	12	13	14	15	16	17	18	19	20		Subgroup 1 T_C = +25°C		Subgroup 2 T_C = +125°C		Subgroup 3 T_C = -55°C		
		Test no.	DIR	A1	A2	A3	A4	A5	A6	A7	A8	B8	B8	B7	B6	B5	B4	B3	B2	B1	$\overline{G}$	V_{CC}		Min	Max	Min	Max	Min	Max	
V_{IC} (pos)		1		1 mA								1/										GND	A1	0.4 1/	1.5					V
		2			1 mA							"										"	A2	"	"					"
		3				1 mA						"										"	A3	"	"					"
		4					1 mA					"										"	A4	"	"					"
		5						1 mA				"										"	A5	"	"					"
		6							1 mA			"										"	A6	"	"					"
		7								1 mA		"										"	A7	"	"					"
		8									1 mA	"										"	A8	"	"					"
		9										"	1 mA									"	B8	"	"					"
		10										"		1 mA								"	B7	"	"					"
		11										"			1 mA							"	B6	"	"					"
		12										"				1 mA						"	B5	"	"					"
		13										"					1 mA					"	B4	"	"					"
		14										"						1 mA				"	B3	"	"					"
		15										"							1 mA			"	B2	"	"					"
		16										"								1 mA		"	B1	"	"					"
V_{IC} (neg)		17		-1 mA								GND										1/	A1		-1.5					"
		18			-1 mA							"										"	A2		"					"
		19				-1 mA						"										"	A3		"					"
		20					-1 mA					"										"	A4		"					"
		21						-1 mA				"										"	A5		"					"
		22							-1 mA			"										"	A6		"					"
		23								-1 mA		"										"	A7		"					"
		24									-1 mA	"										"	A8		"					"
		25										"	-1 mA									"	B8		"					"
		26										"		-1 mA								"	B7		"					"
		27										"			-1 mA							"	B6		"					"
		28										"				-1 mA						"	B5		"					"
		29										"					-1 mA					"	B4		"					"
		30										"						-1 mA				"	B3		"					"
		31										"							-1 mA			"	B2		"					"
		32										"								-1 mA		"	B1		"					"
I_{CC}	3005	33	6 V	6 V	GND	6 V	GND	6 V	GND	6 V	GND	"									GND	6 V	V_{CC}		.2		20			μA
		34	"	6 V	6 V	6 V	6 V	6 V	6 V	6 V	6 V	"									"	"	"		"		"			"
		35	"									"	GND	6 V	GND	6 V	GND	6 V	GND	6 V	"	"	"		"		"			"
		36	"									"	6 V	6 V	6 V	6 V	6 V	6 V	6 V	6 V	"	"	"		"		"			"
I_{CCZ}	3005	37	"									"									6 V	"	"		"		10			"

See footnotes at end of table.

TABLE III. Group A inspection for device type 07 - Continued.

Symbol	MIL-STD-883 method	Cases 2, R	Terminal conditions 1/																					Measured terminal	Test limits						Unit
			1	2	3	4	5	6	7	8	9	10	11	12	13	14	15	16	17	18	19	20			Subgroup 1 T_C = +25°C		Subgroup 2 T_C = +125°C		Subgroup 3 T_C = -55°C		
		Test no.	OUT	A1	A2	A3	A4	A5	A6	A7	A8	GND	B8	B7	B6	B5	B4	B3	B2	B1	G	V_{CC}			Min	Max	Min	Max	Min	Max	
V_{OH3}	3006	38	1.2 V	-20 μA								GND								1.2 V	1.2 V	6 V	A1	5.95		5.95		5.95		V
		39	"		-20 μA							"							1.2 V		"	"	A2	"		"		"		"
		40	"			-20 μA						"						1.2 V			"	"	A3	"		"		"		"
		41	"				-20 μA					"					1.2 V				"	"	A4	"		"		"		"
		42	"					-20 μA				"				1.2 V					"	"	A5	"		"		"		"
		43	"						-20 μA			"			1.2 V						"	"	A6	"		"		"		"
		44	"							-20 μA		"		1.2 V							"	"	A7	"		"		"		"
		45	"								-20 μA	"	1.2 V								"	"	A8	"		"		"		"
		46	4.2 V	1.2 V								"								-20 μA	"	"	B1	"		"		"		"
		47	"		1.2 V							"							-20 μA		"	"	B2	"		"		"		"
		48	"			1.2 V						"						-20 μA			"	"	B3	"		"		"		"
		49	"				1.2 V					"					-20 μA				"	"	B4	"		"		"		"
		50	"					1.2 V				"				-20 μA					"	"	B5	"		"		"		"
		51	"						1.2 V			"			-20 μA						"	"	B6	"		"		"		"
		52	"							1.2 V		"		-20 μA							"	"	B7	"		"		"		"
		53	"								1.2 V	"	-20 μA								"	"	B8	"		"		"		"
V_{OH5}	3006	54 to 69	Same tests and terminal conditions as for V_{OH3} except I_{OH} = -7.8 mA.																						5.48		5.2		5.48		"
V_{OL3}	3007	70	1.2 V	20 μA								GND								4.2 V	1.2 V	6 V	A1		.05		.05		.05	"
		71	"		20 μA							"							4.2 V		"	"	A2		"		"		"	"
		72	"			20 μA						"						4.2 V			"	"	A3		"		"		"	"
		73	"				20 μA					"					4.2 V				"	"	A4		"		"		"	"
		74	"					20 μA				"				4.2 V					"	"	A5		"		"		"	"
		75	"						20 μA			"			4.2 V						"	"	A6		"		"		"	"
		76	"							20 μA		"		4.2 V							"	"	A7		"		"		"	"
		77	"								20 μA	"	4.2 V								"	"	A8		"		"		"	"
		78	4.2 V	4.2 V								"								20 μA	"	"	B1		"		"		"	"
		79	"		4.2 V							"							20 μA		"	"	B2		"		"		"	"
		80	"			4.2 V						"						20 μA			"	"	B3		"		"		"	"
		81	"				4.2 V					"					20 μA				"	"	B4		"		"		"	"
		82	"					4.2 V				"				20 μA					"	"	B5		"		"		"	"
		83	"						4.2 V			"			20 μA						"	"	B6		"		"		"	"
		84	"							4.2 V		"		20 μA							"	"	B7		"		"		"	"
		85	"								4.2 V	"	20 μA								"	"	B8		"		"		"	"
V_{OL5}	3007	86 to 101	Same tests and terminal conditions as for V_{OL3} except I_{OH} = 7.8 mA.																							.26		0.4		.26	"
I_{OS4}	3011	102	GND	GND								"								4 V	GND	4 V	A1	-10	-135	-10	-135	-10	-135	μA
		103	"		GND							"							4 V		"	"	A2	"	"	"	"	"	"	"
		104	"			GND						"						4 V			"	"	A3	"	"	"	"	"	"	"
		105	"				GND					"					4 V				"	"	A4	"	"	"	"	"	"	"
		106	"					GND				"				4 V					"	"	A5	"	"	"	"	"	"	"
		107	"						GND			"			4 V						"	"	A6	"	"	"	"	"	"	"
		108	"							GND		"		4 V							"	"	A7	"	"	"	"	"	"	"
		109	"								GND	"	4 V								"	"	A8	"	"	"	"	"	"	"
		110	4 V	GND								"								GND	"	"	B1	"	"	"	"	"	"	"
		111	"		GND							"							GND		"	"	B2	"	"	"	"	"	"	"
		112	"			GND						"						GND			"	"	B3	"	"	"	"	"	"	"
		113	"				GND					"					GND				"	"	B4	"	"	"	"	"	"	"
		114	"					GND				"				GND					"	"	B5	"	"	"	"	"	"	"
		115	"						GND			"			GND						"	"	B6	"	"	"	"	"	"	"
		116	"							GND		"		GND							"	"	B7	"	"	"	"	"	"	"
		117	"								GND	"	GND								"	"	B8	"	"	"	"	"	"	"

See footnotes at end of table.

TABLE III. Group A inspection for device type 07 - Continued.

Symbol	MIL-STD-883 method	Cases 2, R	Terminal conditions 1/																					Measured terminal	Test limits						Unit
			1	2	3	4	5	6	7	8	9	10	11	12	13	14	15	16	17	18	19	20		Subgroup 1 T_C = +25°C		Subgroup 2 T_C = +125°C		Subgroup 3 T_C = -55°C		
		Test no.	DIR	A1	A2	A3	A4	A5	A6	A7	A8	GND	B8	B7	B6	B5	B4	B3	B2	B1	$\overline{G}$	V_{CC}		Min	Max	Min	Max	Min	Max	
I_{IH}/ I_{OZH}	3010	118	1.2 V	6 V								GND								2/	2/	6 V	A1		.1		2.0			μA
		119	"		6 V							"							2/		"	"	A2		"		"			"
		120	"			6 V						"						2/			"	"	A3		"		"			"
		121	"				6 V					"					2/				"	"	A4		"		"			"
		122	"					6 V				"				2/					"	"	A5		"		"			"
		123	"						6 V			"			2/						"	"	A6		"		"			"
		124	"							6 V		"		2/							"	"	A7		"		"			"
		125	"								6 V	"	2/								"	"	A8		"		"			"
		126	4.2 V								2/	"	6 V								"	"	B8		"		"			"
		127	"							2/		"		6 V							"	"	B7		"		"			"
		128	"						2/			"			6 V						"	"	B6		"		"			"
		129	"					2/				"				6 V					"	"	B5		"		"			"
		130	"				2/					"					6 V				"	"	B4		"		"			"
		131	"			2/						"						6 V			"	"	B3		"		"			"
		132	"		2/							"							6 V		"	"	B2		"		"			"
		133	"	2/								"								6 V	"	"	B1		"		"			"
I_{IH}		134	6 V									"										6 V	DIR		.05		.1			"
		135										"									6 V	6 V	$\overline{G}$		.05		.1			"
I_{IL}/ I_{OZL}	3010	136	1.2 V	GND								"								2/	2/	6 V	A1		-.1		-2.0			"
		137	"		GND							"							2/		"	"	A2		"		"			"
		138	"			GND						"						2/			"	"	A3		"		"			"
		139	"				GND					"					2/				"	"	A4		"		"			"
		140	"					GND				"				2/					"	"	A5		"		"			"
		141	"						GND			"			2/						"	"	A6		"		"			"
		142	"							GND		"		2/							"	"	A7		"		"			"
		143	"								GND	"	2/								"	"	A8		"		"			"
		144	4.2 V								2/	"	GND								"	"	B8		"		"			"
		145	"							2/		"		GND							"	"	B7		"		"			"
		146	"						2/			"			GND						"	"	B6		"		"			"
		146	"					2/				"				GND					"	"	B5		"		"			"
		148	"				2/					"					GND				"	"	B4		"		"			"
		149	"			2/						"						GND			"	"	B3		"		"			"
		150	"		2/							"							GND		"	"	B2		"		"			"
		151	"	2/								"								GND	"	"	B1		"		"			"
I_{IL}		152	GND									"										"	DIR		-.05		-.1			"
		153										"									GND	"	$\overline{G}$		-.05		-.1			"
																								Subgroup 4 T_C = +25°C						Unit
																								Min	Max					
$C_{I/O}$		154	GND	3/								GND									6 V	6 V	A1		20					pF
		155	"		3/							"									"	"	A2		"					"
		156	"			3/						"									"	"	A3		"					"
		157	"				3/					"									"	"	A4		"					"
		158	"					3/				"									"	"	A5		"					"
		159	"						3/			"									"	"	A6		"					"
		160	"							3/		"									"	"	A7		"					"
		161	"								3/	"									"	"	A8		"					"
		162	6 V									"	3/								"	"	B8		"					"
		163	"									"		3/							"	"	B7		"					"
		164	"									"			3/						"	"	B6		"					"
		165	"									"				3/					"	"	B5		"					"
		166	"									"					3/				"	"	B4		"					"
		167	"									"						3/			"	"	B3		"					"
		168	"									"							3/		"	"	B2		"					"
		169	"									"								3/	"	"	B1		"					"
C_C			3/									"											DIR		"					"
												"									3/	GND	$\overline{G}$		"					"

See footnote, at end of table.

TABLE III. Group A inspection for device type 07 - Continued.

Symbol	MIL-STD-883 method	Cases 2, R	Terminal conditions 1/																				Measured terminal	Test limits						Unit
			1	2	3	4	5	6	7	8	9	10	11	12	13	14	15	16	17	18	19	20		Subgroup 7 T_C = +25°C		Subgroup 8 T_C = +125°C		Subgroup 8 T_C = -55°C		
		Test no.	DIX	A1	A2	A3	A4	A5	A6	A7	A8	GND	B8	B7	B6	B5	B4	B3	B2	B1	G	V_{CC}		Min	Max	Min	Max	Min	Max	
Truth table tests 5/	3014	172	A	A	A	A	A	A	A	A	A	"	L	L	L	L	L	L	L	L	0	4.5 V	6/							
		173	A	B	B	B	B	B	B	B	B	"	H	H	H	H	H	H	H	H	"	"								
		174	B	L	L	L	L	L	L	L	L	"	B	B	B	B	B	B	B	B	"	"								
		175	B	H	H	H	H	H	H	H	H	"	A	A	A	A	A	A	A	A	"	"								
																								Subgroup 9 T_C = +25°C 4/		Subgroup 10 T_C = +125°C		Subgroup 11 T_C = -55°C 4/		Unit
																								Min	Max	Min	Max	Min	Max	
t_{THL}	3004 (Fig. 4)	176	GND	OUT								"											A1	2	12	2	16	2	12	ns
		177	"		OUT							"							IN		"	"	A2	"	"	"	"	"	"	"
		178	"			OUT						"						IN			"	"	A3	"	"	"	"	"	"	"
		179	"				OUT					"					IN				"	"	A4	"	"	"	"	"	"	"
		180	"					OUT				"				IN					"	"	A5	"	"	"	"	"	"	"
		181	"						OUT			"			IN						"	"	A6	"	"	"	"	"	"	"
		182	"							OUT		"		IN							"	"	A7	"	"	"	"	"	"	"
		183	"								OUT	"	IN								"	"	A8	"	"	"	"	"	"	"
		184	4.5 V	IN								"								OUT	"	"	B1	"	"	"	"	"	"	"
		185	"		IN							"							OUT		"	"	B2	"	"	"	"	"	"	"
		186	"			IN						"						OUT			"	"	B3	"	"	"	"	"	"	"
		187	"				IN					"					OUT				"	"	B4	"	"	"	"	"	"	"
		188	"					IN				"				OUT					"	"	B5	"	"	"	"	"	"	"
		189	"						IN			"			OUT						"	"	B6	"	"	"	"	"	"	"
		190	"							IN		"		OUT							"	"	B7	"	"	"	"	"	"	"
		191	"								IN	"	OUT								"	"	B8	"	"	"	"	"	"	"
t_{TLH}	3004 (Fig. 4)	192 to 207	Same tests, terminal conditions, and limits as specified above t_{THL}.																					"	"	"	"	"	"	"
t_{PHL2}	3003 (Fig. 4)	208	GND	OUT								GND											B1 to A1	4	20	4	26	4	20	ns
		209	"		OUT							"							IN		"	"	B2 to A2	"	"	"	"	"	"	"
		210	"			OUT						"						IN			"	"	B3 to A3	"	"	"	"	"	"	"
		211	"				OUT					"					IN				"	"	B4 to A4	"	"	"	"	"	"	"
		212	"					OUT				"				IN					"	"	B5 to A5	"	"	"	"	"	"	"
		213	"						OUT			"			IN						"	"	B6 to A6	"	"	"	"	"	"	"
		214	"							OUT		"		IN							"	"	B7 to A7	"	"	"	"	"	"	"
		215	"								OUT	"	IN								"	"	B8 to A8	"	"	"	"	"	"	"
		216	6 V	IN								"								OUT	"	"	A1 to B1	"	"	"	"	"	"	"
		217	"		IN							"							OUT		"	"	A2 to B2	"	"	"	"	"	"	"
		218	"			IN						"						OUT			"	"	A3 to B3	"	"	"	"	"	"	"
		219	"				IN					"					OUT				"	"	A4 to B4	"	"	"	"	"	"	"
		220	"					IN				"				OUT					"	"	A5 to B5	"	"	"	"	"	"	"
		221	"						IN			"			OUT						"	"	A6 to B6	"	"	"	"	"	"	"
		222	"							IN		"		OUT							"	"	A7 to B7	"	"	"	"	"	"	"
		223	"								IN	"	OUT								"	"	A8 to B8	"	"	"	"	"	"	"
t_{PLH2}	3003 (Fig. 4)	224 to 239	Same tests and terminal conditions as specified above t_{PHL1}.																					"	"	"	"	"	"	"

See footnotes at end of table.

TABLE III. Group A inspection for device type 07 - Continued.

Symbol	MIL-STD-883 method	Cases 2, R	Terminal conditions 1/																				Measured terminal	Test limits						Unit
			1	2	3	4	5	6	7	8	9	10	11	12	13	14	15	16	17	18	19	20		Subgroup 9 T_C = +25°C 4/		Subgroup 10 T_C = +125°C		Subgroup 11 T_C = -55°C 4/		
		Test no.	DIR	A1	A2	A3	A4	A5	A6	A7	A8	GND	B8	B7	B6	B5	B4	B3	B2	B1	$\overline{G}$	V_{CC}		Min	Max	Min	Max	Min	Max	
t_{PHZ2} 10/	3003 (Fig. 4)	240	GND	OUT								GND									IN	4.5 V	IG to A1	8	40	8	53	8	40	"
		241	"		OUT							"						4.5 V	4.5 V		"	"	IG to A2	"	"	"	"	"	"	"
		242	"			OUT						"									"	"	IG to A3	"	"	"	"	"	"	"
		243	"				OUT					"				4.5 V	4.5 V				"	"	IG to A4	"	"	"	"	"	"	"
		244	"					OUT				"									"	"	IG to A5	"	"	"	"	"	"	"
		245	"						OUT			"			4.5 V						"	"	IG to A6	"	"	"	"	"	"	"
		246	"							OUT		"		4.5 V							"	"	IG to A7	"	"	"	"	"	"	"
		247	"								OUT	"	4.5 V								"	"	IG to A8	"	"	"	"	"	"	"
		248	4.5 V	GND								"							OUT	OUT	"	"	IG to B1	"	"	"	"	"	"	"
		249	"		GND							"									"	"	IG to B2	"	"	"	"	"	"	"
		250	"			GND						"									"	"	IG to B3	"	"	"	"	"	"	"
		251	"				GND					"					OUT				"	"	IG to B4	"	"	"	"	"	"	"
		252	"					GND				"				OUT					"	"	IG to B5	"	"	"	"	"	"	"
		253	"						GND			"			OUT						"	"	IG to B6	"	"	"	"	"	"	"
		254	"							GND		"		OUT							"	"	IG to B7	"	"	"	"	"	"	"
		255	"								GND	"	OUT								"	"	IG to B8	"	"	"	"	"	"	"
t_{PZH2} 10/	3003 (Fig. 4)	256 to 271	Same tests and terminal conditions as specified above t_{PHZ}.																					9	44	9	59	9	44	"
t_{PLZ2} 9/	3003 (Fig. 4)	272	GND	OUT								GND									IN	4.5 V	IG to A1	8	40	8	53	8	40	"
		273	"		OUT							"									"	"	IG to A2	"	"	"	"	"	"	"
		274	"			OUT						"									"	"	IG to A3	"	"	"	"	"	"	"
		275	"				OUT					"									"	"	IG to A4	"	"	"	"	"	"	"
		276	"					OUT				"					GND				"	"	IG to A5	"	"	"	"	"	"	"
		277	"						OUT			"				GND					"	"	IG to A6	"	"	"	"	"	"	"
		278	"							OUT		"			GND						"	"	IG to A7	"	"	"	"	"	"	"
		279	"								OUT	"	GND								"	"	IG to A8	"	"	"	"	"	"	"
		280	4.5 V	4.5 V								"							GND	GND	"	"	IG to B1	"	"	"	"	"	"	"
		281	"		4.5 V							"									"	"	IG to B2	"	"	"	"	"	"	"
		282	"			4.5 V						"							OUT	OUT	"	"	IG to B3	"	"	"	"	"	"	"
		283	"				4.5 V					"					OUT				"	"	IG to B4	"	"	"	"	"	"	"
		284	"					4.5 V				"				OUT					"	"	IG to B5	"	"	"	"	"	"	"
		285	"						4.5 V			"			OUT						"	"	IG to B6	"	"	"	"	"	"	"
		286	"							4.5 V		"		OUT							"	"	IG to B7	"	"	"	"	"	"	"
		287	"								4.5 V	"	OUT								"	"	IG to B8	"	"	"	"	"	"	"
t_{PZL2} 9/	3003 (Fig. 4)	288 to 303	Same tests and terminal conditions as specified above t_{PLZ}.																					9	44	9	59	9	44	"

See footnotes at end of table.

TABLE III. Group A inspection for device type 08.

Symbol	MIL-STD-883 method	Case 3 / Case L / Test no.	Terminal conditions 1/																								Measured terminal	Test limits						Units
			2	3	4	5	6	7	9	10	11	12	13	14	16	17	18	19	20	21	23	24	25	26	27	28		Subgroup 1 T_C = +25°C		Subgroup 2 T_C = +125°C		Subgroup 3 T_C = -55°C		
			1	2	3	4	5	6	7	8	9	10	11	12	13	14	15	16	17	18	19	20	21	22	23	24								
			CAB	SAB	DIR	A1	A2	A3	A4	A5	A6	A7	A8	GND	B8	B7	B6	B5	B4	B3	B2	B1	E	S3A	CBA	V_{CC}		Min	Max	Min	Max	Min	Max	
V_{IC} (pos)		1	1 mA											1/													GND	CAB	0.4 1/	1.5					V
		2		1 mA										•													•	SAB	•	•					•
		3			1 mA									•													•	DIR	•	•					•
		4				1 mA								•													•	A1	•	•					•
		5					1 mA							•													•	A2	•	•					•
		6						1 mA						•													•	A3	•	•					•
		7							1 mA					•													•	A4	•	•					•
		8								1 mA				•													•	A5	•	•					•
		9									1 mA			•													•	A6	•	•					•
		10										1 mA		•													•	A7	•	•					•
		11											1 mA	•													•	A8	•	•					•
		12												•	1 mA												•	B8	•	•					•
		13												•		1 mA											•	B7	•	•					•
		14												•			1 mA										•	B6	•	•					•
		15												•				1 mA									•	B5	•	•					•
		16												•					1 mA								•	B4	•	•					•
		17												•						1 mA							•	B3	•	•					•
		18												•							1 mA						•	B2	•	•					•
		19												•								1 mA					•	B1	•	•					•
		20												•									1 mA				•	E	•	•					•
		21												•										1 mA			•	S3A	•	•					•
		22												•											1 mA		•	CBA	•	•					•
V_{IC} (neg)		23	-1 mA											GND													1/	CAB		-1.5					•
		24		-1 mA										•													•	SAB		•					•
		25			-1 mA									•													•	DIR		•					•
		26				-1 mA								•													•	A1		•					•
		27					-1 mA							•													•	A2		•					•
		28						-1 mA						•													•	A3		•					•
		29							-1 mA					•													•	A4		•					•
		30								-1 mA				•													•	A5		•					•
		31									-1 mA			•													•	A6		•					•
		32										-1 mA		•													•	A7		•					•
		33											-1 mA	•													•	A8		•					•
		34												•	-1 mA												•	B8		•					•
		35												•		-1 mA											•	B7		•					•
		36												•			-1 mA										•	B6		•					•
		37												•				-1 mA									•	B5		•					•
		38												•					-1 mA								•	B4		•					•
		39												•						-1 mA							•	B3		•					•
		40												•							-1 mA						•	B2		•					•
		41												•								-1 mA					•	B1		•					•
		42												•									-1 mA				•	E		•					•
		43												•										-1 mA			•	S3A		•					•
		44												•											-1 mA		•	CBA		•					•

See footnotes at end of table.

TABLE III. Group A inspection for device type 08 - Continued.

Symbol	MIL-STD-883 method	Case 3 / Case L / Test no.	Terminal conditions 1/ 2 / 1 / CA8	3 / 2 / SA8	4 / 3 / DIR	5 / 4 / A1	6 / 5 / A2	7 / 6 / A3	9 / 7 / A4	10 / 8 / A5	11 / 9 / A6	12 / 10 / A7	13 / 11 / A8	14 / 12 / GND	16 / 13 / B8	17 / 14 / B7	18 / 15 / B6	19 / 16 / B5	20 / 17 / B4	21 / 18 / B3	23 / 19 / B2	24 / 20 / B1	25 / 21 / E	26 / 22 / SBA	27 / 23 / CBA	28 / 24 / V_{LC}	Measured terminal	Test limits: Subgroup 1 T_C = +25°C Min	Subgroup 1 Max	Subgroup 2 T_C = +125°C Min	Subgroup 2 Max	Subgroup 3 T_C = -55°C Min	Subgroup 3 Max	Unit
I_{CC}	3005	45	GND	GND	6 V	6 V	GND	6 V	GND	6 V	GND	6 V	GND	GND									GND	GND	GND	6 V	V_{CC}		.2		20			mA
		46	"	"	6 V	6 V	6 V	6 V	6 V	6 V	6 V	6 V	6 V	"									"	"	"	"	"		"		"			"
		47	"	"	GND									"	GND	6 V	GND	6 V	GND	6 V	GND	6 V	"	"	"	"	"		"		"			"
		48	"	"	GND									"	6 V	6 V	6 V	6 V	6 V	6 V	6 V	6 V	"	"	"	"	"		"		"			"
I_{CCZ}	3005	49	GND	GND	GND	6 V	6 V	6 V	6 V	6 V	6 V	6 V	6 V	"	GND	GND	GND	GND	GND	GND	GND	GND	6 V	GND	GND	6 V	"		0.2		10			"
		50	GND	GND	GND	GND	GND	GND	GND	GND	GND	GND	GND	"	6 V	6 V	6 V	6 V	6 V	6 V	6 V	6 V	6 V	GND	GND	6 V	"		0.2		10			"
V_{OH3}	3006	51	1.2 V	1.2 V	1.2 V	-20 μA								"								4.2 V	1.2 V	1.2 V	1.2 V	6 V	A1	5.95		5.95		5.95		V
		52	"	"	"		-20 μA							"							4.2 V		"	"	"	"	A2	"		"		"		"
		53	"	"	"			-20 μA						"						4.2 V			"	"	"	"	A3	"		"		"		"
		54	"	"	"				-20 μA					"					4.2 V				"	"	"	"	A4	"		"		"		"
		55	"	"	"					-20 μA				"				4.2 V					"	"	"	"	A5	"		"		"		"
		56	"	"	"						-20 μA			"			4.2 V						"	"	"	"	A6	"		"		"		"
		57	"	"	"							-20 μA		"		4.2 V							"	"	"	"	A7	"		"		"		"
		58	"	"	"								-20 μA	"	4.2 V								"	"	"	"	A8	"		"		"		"
		59	"	"	4.2 V	4.2 V								"								-20 μA	"	"	"	"	B1	"		"		"		"
		60	"	"	"		4.2 V							"							-20 μA		"	"	"	"	B2	"		"		"		"
		61	"	"	"			4.2 V						"						-20 μA			"	"	"	"	B3	"		"		"		"
		62	"	"	"				4.2 V					"					-20 μA				"	"	"	"	B4	"		"		"		"
		63	"	"	"					4.2 V				"				-20 μA					"	"	"	"	B5	"		"		"		"
		64	"	"	"						4.2 V			"			-20 μA						"	"	"	"	B6	"		"		"		"
		65	"	"	"							4.2 V		"		-20 μA							"	"	"	"	B7	"		"		"		"
		66	"	"	"								4.2 V	"	-20 μA								"	"	"	"	B8	"		"		"		"
V_{OH5}	3006	67	1.2 V	1.2 V	1.2 V	-7.8 mA								"								4.2 V	1.2 V	1.2 V	1.2 V	6 V	A1	5.48		5.2		5.48		"
		68	"	"	"		-7.8 mA							"							4.2 V		"	"	"	"	A2	"		"		"		"
		69	"	"	"			-7.8 mA						"						4.2 V			"	"	"	"	A3	"		"		"		"
		70	"	"	"				-7.8 mA					"					4.2 V				"	"	"	"	A4	"		"		"		"
		71	"	"	"					-7.8 mA				"				4.2 V					"	"	"	"	A5	"		"		"		"
		72	"	"	"						-7.8 mA			"			4.2 V						"	"	"	"	A6	"		"		"		"
		73	"	"	"							-7.8 mA		"		4.2 V							"	"	"	"	A7	"		"		"		"
		74	"	"	"								-7.8 mA	"	4.2 V								"	"	"	"	A8	"		"		"		"
		75	"	"	4.2 V	4.2 V								"								-7.8 mA	"	"	"	"	B1	"		"		"		"
		76	"	"	"		4.2 V							"							-7.8 mA		"	"	"	"	B2	"		"		"		"
		77	"	"	"			4.2 V						"						-7.8 mA			"	"	"	"	B3	"		"		"		"
		78	"	"	"				4.2 V					"					-7.8 mA				"	"	"	"	B4	"		"		"		"
		79	"	"	"					4.2 V				"				-7.8 mA					"	"	"	"	B5	"		"		"		"
		80	"	"	"						4.2 V			"			-7.8 mA						"	"	"	"	B6	"		"		"		"
		81	"	"	"							4.2 V		"		-7.8 mA							"	"	"	"	B7	"		"		"		"
		82	"	"	"								4.2 V	"	-7.8 mA								"	"	"	"	B8	"		"		"		"
V_{OL3}	3007	83	1.2 V	1.2 V	1.2 V	20 μA								"								1.2 V	1.2 V	1.2 V	1.2 V	6 V	A1		.05		.05		.05	"
		84	"	"	"		20 μA							"							1.2 V		"	"	"	"	A2		"		"		"	"
		85	"	"	"			20 μA						"						1.2 V			"	"	"	"	A3		"		"		"	"
		86	"	"	"				20 μA					"					1.2 V				"	"	"	"	A4		"		"		"	"
		87	"	"	"					20 μA				"				1.2 V					"	"	"	"	A5		"		"		"	"
		88	"	"	"						20 μA			"			1.2 V						"	"	"	"	A6		"		"		"	"
		89	"	"	"							20 μA		"		1.2 V							"	"	"	"	A7		"		"		"	"
		90	"	"	"								20 μA	"	1.2 V								"	"	"	"	A8		"		"		"	"
		91	"	"	4.2 V	1.2 V								"								20 μA	"	"	"	"	B1		"		"		"	"
		92	"	"	"		1.2 V							"							20 μA		"	"	"	"	B2		"		"		"	"
		93	"	"	"			1.2 V						"						20 μA			"	"	"	"	B3		"		"		"	"
		94	"	"	"				1.2 V					"					20 μA				"	"	"	"	B4		"		"		"	"
		95	"	"	"					1.2 V				"				20 μA					"	"	"	"	B5		"		"		"	"
		96	"	"	"						1.2 V			"			20 μA						"	"	"	"	B6		"		"		"	"
		97	"	"	"							1.2 V		"		20 μA							"	"	"	"	B7		"		"		"	"
		98	"	"	"								1.2 V	"	20 μA								"	"	"	"	B8		"		"		"	"

See footnotes at end of table.

TABLE III. Group A inspection for device type 08 - Continued.

Symbol	MIL-STD-883 method	Case J	2	3	4	5	6	7	9	10	11	12	13	14	16	17	18	19	20	21	23	24	25	26	27	28	Measured terminal	Test limits Subgroup 1 T_C = +25°C Min	Subgroup 1 Max	Subgroup 2 T_C = +125°C Min	Subgroup 2 Max	Subgroup 3 T_C = -55°C Min	Subgroup 3 Max	Unit
		Case L	1	2	3	4	5	6	7	8	9	10	11	12	13	14	15	16	17	18	19	20	21	22	23	24								
		Terminal conditions 1/																																
		Test no.	CAB	SAB	DIR	A1	A2	A3	A4	A5	A6	A7	A8	GND	B8	B7	B6	B5	B4	B3	B2	B1	E	SBA	CBA	V_{CC}								
V_{OL5}	3007	99	1.2 V	1.2 V	1.2 V	7.8 mA								GND													A1		.26		0.4		.26	V
		100	"	"	"		7.8 mA							"							1.2 V	1.2 V	1.2 V	1.2 V	1.2 V	6 V	A2		"		"		"	"
		101	"	"	"			7.8 mA						"						1.2 V			"	"	"	"	A3		"		"		"	"
		102	"	"	"				7.8 mA					"					1.2 V				"	"	"	"	A4		"		"		"	"
		103	"	"	"					7.8 mA				"				1.2 V					"	"	"	"	A5		"		"		"	"
		104	"	"	"						7.8 mA			"			1.2 V						"	"	"	"	A6		"		"		"	"
		105	"	"	"							7.8 mA		"		1.2 V							"	"	"	"	A7		"		"		"	"
		106	"	"	4.2 V	1.2 V							7.8 mA	"	1.2 V							7.8 mA	"	"	"	"	A8		"		"		"	"
		107	"	"	"		1.2 V							"						7.8 mA	7.8 mA		"	"	"	"	B1		"		"		"	"
		108	"	"	"			1.2 V						"					7.8 mA				"	"	"	"	B2		"		"		"	"
		109	"	"	"				1.2 V					"				7.8 mA					"	"	"	"	B3		"		"		"	"
		110	"	"	"					1.2 V				"			7.8 mA						"	"	"	"	B4		"		"		"	"
		111	"	"	"						1.2 V			"		7.8 mA							"	"	"	"	B5		"		"		"	"
		112	"	"	"							1.2 V		"	7.8 mA								"	"	"	"	B6		"		"		"	"
		113	"	"	"								1.2 V	"									"	"	"	"	B7		"		"		"	"
		114	"	"	"									"									"	"	"	"	B8		"		"		"	"
I_{OS4}	3011	115	GND	GND	GND	GND								"									GND	GND	GND	4 V	A1	-10	-135	-10	-135	-10	-135	mA
		116	"	"	"		GND							"							4 V	4 V	"	"	"	"	A2	"	"	"	"	"	"	"
		117	"	"	"			GND						"						4 V			"	"	"	"	A3	"	"	"	"	"	"	"
		118	"	"	"				GND					"					4 V				"	"	"	"	A4	"	"	"	"	"	"	"
		119	"	"	"					GND				"				4 V					"	"	"	"	A5	"	"	"	"	"	"	"
		120	"	"	"						GND			"			4 V						"	"	"	"	A6	"	"	"	"	"	"	"
		121	"	"	"							GND		"		4 V							"	"	"	"	A7	"	"	"	"	"	"	"
		122	"	"	4 V	4 V							GND	"	4 V								"	"	"	"	A8	"	"	"	"	"	"	"
		123	"	"	"		4 V							"								GND	"	"	"	"	B1	"	"	"	"	"	"	"
		124	"	"	"			4 V						"							GND		"	"	"	"	B2	"	"	"	"	"	"	"
		125	"	"	"				4 V					"					GND				"	"	"	"	B3	"	"	"	"	"	"	"
		126	"	"	"					4 V				"				GND					"	"	"	"	B4	"	"	"	"	"	"	"
		127	"	"	"						4 V			"			GND						"	"	"	"	B5	"	"	"	"	"	"	"
		128	"	"	"							4 V		"		GND							"	"	"	"	B6	"	"	"	"	"	"	"
		129	"	"	"								4 V	"	GND								"	"	"	"	B7	"	"	"	"	"	"	"
		130	"	"	"									"									"	"	"	"	B8	"	"	"	"	"	"	"
I_{IH}/ I_{OZH}		131			1.2 V	6 V								"													A1		.1		2.0			μA
		132			"		6 V							"							2/	2/	2/	GND	2/	6 V	A2		"		"			"
		133			"			6 V						"						2/			"	"	"	"	A3		"		"			"
		134			"				6 V					"					2/				"	"	"	"	A4		"		"			"
		135			"					6 V				"				2/					"	"	"	"	A5		"		"			"
		136			"						6 V			"			2/						"	"	"	"	A6		"		"			"
		137			"							6 V		"		2/							"	"	"	"	A7		"		"			"
		138			"								6 V	"	2/								"	"	"	"	A8		"		"			"
		139	2/	GND	4.2 V	2/								"								6 V	"			"	B1		"		"			"
		140	"	"	"		2/							"						6 V	6 V		"			"	B2		"		"			"
		141	"	"	"			2/						"					6 V				"			"	B3		"		"			"
		142	"	"	"				2/					"				6 V					"			"	B4		"		"			"
		143	"	"	"					2/				"			6 V						"			"	B5		"		"			"
		144	"	"	"						2/			"		6 V							"			"	B6		"		"			"
		145	"	"	"							2/		"	6 V								"			"	B7		"		"			"
		146	"	"	"								2/	"									"			"	B8		"		"			"

See footnotes at end of table.

TABLE III. Group A inspection for device type 08 - Continued.

Symbol	MIL-STD-883 method	Case J	2	3	4	5	6	7	9	10	11	12	13	14	16	17	18	19	20	21	23	24	25	26	27	28	Measured terminal	Test limits Subgroup 1 T_C = +25°C Min	Subgroup 1 Max	Subgroup 2 T_C = +125°C Min	Subgroup 2 Max	Subgroup 3 T_C = -55°C Min	Subgroup 3 Max	Units
		Case L	1	2	3	4	5	6	7	8	9	10	11	12	13	14	15	16	17	18	19	20	21	22	23	24								
		Terminal conditions 1/																																
		Test no.	CAB	SAB	DIR	A1	A2	A3	A4	A5	A6	A7	A8	GND	B8	B7	B6	B5	B4	B3	B2	B1	E	SBA	CBA	V_{CC}								
I_{IL}/ I_{OZL}		147			1.2 V	GND								GND								2/	2/	GND	2/	6 V	A1		-.1		-2.0			μA
		148			"		GND							"							2/		"	"	"	"	A2		"		"			"
		149			"			GND						"						2/			"	"	"	"	A3		"		"			"
		150			"				GND					"					2/				"	"	"	"	A4		"		"			"
		151			"					GND				"				2/					"	"	"	"	A5		"		"			"
		152			"						GND			"			2/						"	"	"	"	A6		"		"			"
		153			"							GND		"		2/							"	"	"	"	A7		"		"			"
		154			"								GND	"	2/								"	"	"	"	A8		"		"			"
		155	2/	GND	4.2 V	2/								"								GND	"			"	B1		"		"			"
		156	"	"	"		2/							"							GND		"			"	B2		"		"			"
		157	"	"	"			2/						"						GND			"			"	B3		"		"			"
		158	"	"	"				2/					"					GND				"			"	B4		"		"			"
		159	"	"	"					2/				"				GND					"			"	B5		"		"			"
		160	"	"	"						2/			"			GND						"			"	B6		"		"			"
		161	"	"	"							2/		"		GND							"			"	B7		"		"			"
		162											2/	"	GND								"			"	B8		"		"			"
I_{IH}	3010	163	6 V											"												"	CAB		.05		0.1			"
		164		6 V										"												"	SAB		"		"			"
		165			6 V									"												"	DIR		"		"			"
		166												"									6 V			"	E		"		"			"
		167												"										6 V		"	SBA		"		"			"
		168												"											6 V	"	CBA		"		"			"
I_{IL}	3009	169	GND											"												"	CAB		-0.5		-.1			"
		170		GND										"												"	SAB		"		"			"
		171			GND									"												"	DIR		"		"			"
		172												"									GND			"	E		"		"			"
		173												"										GND		"	SBA		"		"			"
		174												"											GND	"	CBA		"		"			"
$C_{I/O}$		175	GND	GND	GND	3/								"									6 V	GND	GND	"	A1		20					"
		176	"	"	"		3/							"									"	"	"	"	A2		"					"
		177	"	"	"			3/						"									"	"	"	"	A3		"					"
		178	"	"	"				3/					"									"	"	"	"	A4		"					"
		179	"	"	"					3/				"									"	"	"	"	A5		"					"
		180	"	"	"						3/			"									"	"	"	"	A6		"					"
		181	"	"	"							3/		"									"	"	"	"	A7		"					"
		182	"	"	"								3/	"									"	"	"	"	A8		"					"
		183	"	"	6 V									"	3/								"	"	"	"	B4		"					"
		184	"	"	"									"		3/							"	"	"	"	B7		"					"
		185	"	"	"									"			3/						"	"	"	"	B6		"					"
		186	"	"	"									"				3/					"	"	"	"	B5		"					"
		187	"	"	"									"					3/				"	"	"	"	B4		"					"
		188	"	"	"									"						3/			"	"	"	"	B3		"					"
		189	"	"	"									"							3/		"	"	"	"	B2		"					"
		190	"	"	"									"								3/	"	"	"	"	B1		"					"
C_C		191	3/											"												GND	CAB		10					"
		192		3/										"												"	SAB		"					"
		193			3/									"												"	DIR		"					"
		194												"									3/			"	E		"					"
		195												"										3/		"	SBA		"					"
		196												"											3/	"	CBA		"					"

See footnotes at end of table.

TABLE III. Group A inspection for device type 08 - Continued.

Symbol	MIL-STD-883 method	Case 3 / Case L / Test no.	Terminal conditions 1/																										Measured terminal	Test limits: Subgroup 7 T_C = +25°C Min	Subgroup 7 Max	Subgroup 8 T_C = +125°C Min	Subgroup 8 Max	Subgroup 9 T_C = -55°C Min	Subgroup 9 Max	Unit
			2	3	4	5	6	7	9	10	11	12	13	14	16	17	18	19	20	21	23	24	25	26	27	28									
			1	2	3	4	5	6	7	8	9	10	11	12	13	14	15	16	17	18	19	20	21	22	23	24									
		Test no.	CAB	SAB	J1R	A1	A2	A3	A4	A5	A6	A7	A8	GND	B8	B7	B6	B5	B4	B3	B2	B1	E	SBA	CdA	V_{CC}									
Truth table tests 5/	3014	197	B	B	A	A	A	A	A	A	A	A	A	GND	H	H	H	H	H	H	H	H	B	B	B	4.5 V	6/								
		198	"	"	A	B	B	B	B	B	B	B	B	"	L	L	L	L	L	L	L	L	"	"	"	"										
		199	"	"	B	H	H	H	H	H	H	H	H	"	A	A	A	A	A	A	A	A	"	"	"	"										
		200	"	"	B	L	L	L	L	L	L	L	L	"	B	B	B	B	B	B	B	B	"	"	"	"										
		201	"	A	A	A	A	A	A	A	A	A	A	"	L	L	L	L	L	L	L	L	"	"	"	"										
		202	A	"	"	A	A	A	A	A	A	A	A	"	H	H	H	H	H	H	H	H	"	"	"	"										
		203	B	"	"	B	B	B	B	B	B	B	B	"	H	H	H	H	H	H	H	H	"	"	"	"										
		204	A	"	"	B	B	B	B	B	B	B	B	"	L	L	L	L	L	L	L	L	"	"	"	"										
		205	B	B	B	L	L	L	L	L	L	L	L	"	H	H	H	H	H	H	H	H	"	"	"	"										
		206	"	"	"	H	H	H	H	H	H	H	H	"	A	A	A	A	A	A	A	A	"	A	"	"										
		207	"	"	"	H	H	H	H	H	H	H	H	"	A	A	A	A	A	A	A	A	"	"	A	"										
		208	"	"	"	L	L	L	L	L	L	L	L	"	B	B	B	B	B	B	B	B	"	"	B	"										
		209	"	"	"	L	L	L	L	L	L	L	L	"	B	B	B	B	B	B	B	B	"	"	A	"										
																													Subgroup 9 T_C = +25°C Min	Subgroup 9 Max	Subgroup 10 T_C = +125°C Min	Subgroup 10 Max	Subgroup 11 T_C = -55°C Min	Subgroup 11 Max	
f_{MAX} 8/	3003	210	GND	GND	GND	OUT	OUT	OUT	OUT	OUT	OUT	OUT	OUT	GND	IN	IN	IN	IN	IN	IN	IN	IN	GND	GND	GND	4.5 V	A1	30		23		33		MHZ
		211	"	"	"									"									"	"	"	"	A2	"		"		"		"
		212	"	"	"									"									"	"	"	"	A3	"		"		"		"
		213	"	"	"									"									"	"	"	"	A4	"		"		"		"
		214	"	"	"									"									"	"	"	"	A5	"		"		"		"
		215	"	"	"									"									"	"	"	"	A6	"		"		"		"
		216	"	"	"									"									"	"	"	"	A7	"		"		"		"
		217	"	"	"									"									"	"	"	"	A8	"		"		"		"
		218	"	"	4.5 V	IN	IN	IN	IN	IN	IN	IN	IN	"									"	"	"	"	B8	"		"		"		"
		219	"	"	"									"									"	"	"	"	B7	"		"		"		"
		220	"	"	"									"									"	"	"	"	B6	"		"		"		"
		221	"	"	"									"									"	"	"	"	B5	"		"		"		"
		222	"	"	"									"									"	"	"	"	B4	"		"		"		"
		223	"	"	"									"									"	"	"	"	B3	"		"		"		"
		224	"	"	"									"									"	"	"	"	B2	"		"		"		"
		225	"	"	"									"									"	"	"	"	B1	"		"		"		"
t_{THL}	3004 (Fig. 4)	226	GND	GND	GND	OUT	OUT	OUT	OUT	OUT	OUT	OUT	OUT	"	IN	IN	IN	IN	IN	IN	IN	IN	"	"	"	"	A1	2	12	2	16	2	12	ns
		227	"	"	"									"									"	"	"	"	A2	"	"	"	"	"	"	"
		228	"	"	"									"									"	"	"	"	A3	"	"	"	"	"	"	"
		229	"	"	"									"									"	"	"	"	A4	"	"	"	"	"	"	"
		230	"	"	"									"									"	"	"	"	A5	"	"	"	"	"	"	"
		231	"	"	"									"									"	"	"	"	A6	"	"	"	"	"	"	"
		232	"	"	"									"									"	"	"	"	A7	"	"	"	"	"	"	"
		233	"	"	"									"									"	"	"	"	A8	"	"	"	"	"	"	"
		234	"	"	4.5 V	IN	IN	IN	IN	IN	IN	IN	IN	"									"	"	"	"	B8	"	"	"	"	"	"	"
		235	"	"	"									"									"	"	"	"	B7	"	"	"	"	"	"	"
		236	"	"	"									"									"	"	"	"	B6	"	"	"	"	"	"	"
		237	"	"	"									"									"	"	"	"	B5	"	"	"	"	"	"	"
		238	"	"	"									"									"	"	"	"	B4	"	"	"	"	"	"	"
		239	"	"	"									"									"	"	"	"	B3	"	"	"	"	"	"	"
		240	"	"	"									"									"	"	"	"	B2	"	"	"	"	"	"	"
		241	"	"	"									"									"	"	"	"	B1	"	"	"	"	"	"	"
t_{TLH}	3004 (Fig. 4)	242 to 257	Same tests, terminal conditions, and limits as specified above for t_{THL}.																									"	"	"	"	"	"	"

See footnotes at end of table.

TABLE III. Group A inspection for device type 08 - Continued.

Symbol	MIL-STD-883 method	Case J / Case L / Test no.	Terminal conditions 1/ 2 / 1 / CAB	3 / 2 / SAB	4 / 3 / DIR	5 / 4 / A1	6 / 5 / A2	7 / 6 / A3	9 / 7 / A4	10 / 8 / A5	11 / 9 / A6	12 / 10 / A7	13 / 11 / A8	14 / 12 / GND	16 / 13 / B8	17 / 14 / B7	18 / 15 / B6	19 / 16 / B5	20 / 17 / B4	21 / 18 / B3	23 / 19 / B2	24 / 20 / B1	25 / 21 / E	26 / 22 / SBA	27 / 23 / CBA	28 / 24 / V_{CC}	Measured terminal	Test limits: Subgroup 9, T_C = +25°C 4/ Min	Subgroup 9 Max	Subgroup 10, T_C = +125°C Min	Subgroup 10 Max	Subgroup 11, T_C = -55°C 4/ Min	Subgroup 11 Max	Unit
t_{PHL1}	3003 (Fig. 4)	258	GND	GND	GND	OUT								GND								IN	GND	4.5 V	IN	4.5 V	CBA to A1	8	39	8	51	8	38	ns
		259	"	"	"		OUT							"							IN		"	"	"	"	CBA to A2	"	"	"	"	"	"	"
		260	"	"	"			OUT						"						IN			"	"	"	"	CBA to A3	"	"	"	"	"	"	"
		261	"	"	"				OUT					"					IN				"	"	"	"	CBA to A4	"	"	"	"	"	"	"
		262	"	"	"					OUT				"				IN					"	"	"	"	CBA to A5	"	"	"	"	"	"	"
		263	"	"	"						OUT			"			IN						"	"	"	"	CBA to A6	"	"	"	"	"	"	"
		264	"	"	"							OUT		"		IN							"	"	"	"	CBA to A7	"	"	"	"	"	"	"
		265	"	"	"								OUT	"	IN								"	"	"	"	CBA to A8	"	"	"	"	"	"	"
		266	IN	4.5 V	4.5 V	Id								"								OUT	"	"	"	"	CAB to B1	"	"	"	"	"	"	"
		267	"	"	"		IN							"							OUT		"	"	"	"	CAB to B2	"	"	"	"	"	"	"
		268	"	"	"			IN						"						OUT			"	"	"	"	CAB to B3	"	"	"	"	"	"	"
		269	"	"	"				IN					"					OUT				"	"	"	"	CAB to B4	"	"	"	"	"	"	"
		270	"	"	"					IN				"				OUT					"	"	"	"	CAB to B5	"	"	"	"	"	"	"
		271	"	"	"						IN			"			OUT						"	"	"	"	CAB to B6	"	"	"	"	"	"	"
		272	"	"	"							IN		"		OUT							"	"	"	"	CAB to B7	"	"	"	"	"	"	"
		273	"	"	"								IN	"	OUT								"	"	"	"	CAB to B8	"	"	"	"	"	"	"
t_{PLH1}	3003 (Fig. 4)	274 to 289	Same terminal conditions and measured terminals as specified above for t_{PHL1}.																									"	"	"	"	"	"	"
t_{PHL2}	3003 (Fig. 4)	290	GND	GND	GND	OUT								GND								IN	GND	GND	GND	4.5 V	B1 to A1	5	30	5	40	5	30	ns
		291	"	"	"		OUT							"							Id		"	"	"	"	B2 to A2	"	"	"	"	"	"	"
		292	"	"	"			OUT						"						IN			"	"	"	"	B3 to A3	"	"	"	"	"	"	"
		293	"	"	"				OUT					"					IN				"	"	"	"	B4 to A4	"	"	"	"	"	"	"
		294	"	"	"					OUT				"				IN					"	"	"	"	B5 to A5	"	"	"	"	"	"	"
		295	"	"	"						OUT			"			IN						"	"	"	"	B6 to A6	"	"	"	"	"	"	"
		296	"	"	"							OUT		"		IN							"	"	"	"	B7 to A7	"	"	"	"	"	"	"
		297	"	"	"								OUT	"	IN								"	"	"	"	B8 to A8	"	"	"	"	"	"	"
		298	"	"	4.5 V	Id								"								OUT	"	"	"	"	A1 to B1	"	"	"	"	"	"	"
		299	"	"	"		IN							"							OUT		"	"	"	"	A2 to B2	"	"	"	"	"	"	"
		300	"	"	"			Id						"						OUT			"	"	"	"	A3 to B3	"	"	"	"	"	"	"
		301	"	"	"				IN					"					OUT				"	"	"	"	A4 to B4	"	"	"	"	"	"	"
		302	"	"	"					IN				"				OUT					"	"	"	"	A5 to B5	"	"	"	"	"	"	"
		303	"	"	"						IN			"			OUT						"	"	"	"	A6 to B6	"	"	"	"	"	"	"
		304	"	"	"							IN		"		OUT							"	"	"	"	A7 to B7	"	"	"	"	"	"	"
		305	"	"	"								IN	"	OUT								"	"	"	"	A8 to B8	"	"	"	"	"	"	"
t_{PLH2}	3003 (Fig. 4)	306 to 321	Same terminal conditions and measured terminals as specified above for t_{PHL2}.																									"	"	"	"	"	"	"
t_{PHL3}	3003 (Fig. 4)	322	GND	GND	GND	OUT								"								5/	GND	IN	5/	4.5 V	SBA to A1	10	38	10	51	10	38	ns
		323	"	"	"		OUT							"							5/		"	"	"	"	SBA to A2	"	"	"	"	"	"	"
		324	"	"	"			OUT						"						5/			"	"	"	"	SBA to A3	"	"	"	"	"	"	"
		325	"	"	"				OUT					"					5/				"	"	"	"	SBA to A4	"	"	"	"	"	"	"
		326	"	"	"					OUT				"				5/					"	"	"	"	SBA to A5	"	"	"	"	"	"	"
		327	"	"	"						OUT			"			5/						"	"	"	"	SBA to A6	"	"	"	"	"	"	"
		328	"	"	"							OUT		"		5/							"	"	"	"	SBA to A7	"	"	"	"	"	"	"
		329	"	"	"								OUT	"	5/								"	"	"	"	SBA to A8	"	"	"	"	"	"	"
		330	5/	IN	4.5 V	5/								"								OUT	"	GND	GND	"	SAB to B1	"	"	"	"	"	"	"
		331	"	"	"		5/							"							OUT		"	"	"	"	SAB to B2	"	"	"	"	"	"	"
		332	"	"	"			5/						"						OUT			"	"	"	"	SAB to B3	"	"	"	"	"	"	"
		333	"	"	"				5/					"					OUT				"	"	"	"	SAB to B4	"	"	"	"	"	"	"
		334	"	"	"					5/				"				OUT					"	"	"	"	SAB to B5	"	"	"	"	"	"	"
		335	"	"	"						5/			"			OUT						"	"	"	"	SAB to B6	"	"	"	"	"	"	"
		336	"	"	"							5/		"		OUT							"	"	"	"	SAB to B7	"	"	"	"	"	"	"
		337	"	"	"								5/	"	OUT								"	"	"	"	SAB to B8	"	"	"	"	"	"	"
t_{PLH3}	3003 (Fig. 4)	338 to 353	Same terminal conditions and measured terminals as specified above for t_{PHL3}.																									"	"	"	"	"	"	"

See footnotes at end of table.

TABLE III. Group A inspection for device type 08 - Continued.

Symbol	MIL-STD-883 method	Case 3 / Case L / Test no.	Terminal conditions 1/																								Measured terminal	Test limits: Subgroup 9 T_C = +25°C		Subgroup 10 T_C = +125°C		Subgroup 11 T_C = -55°C		Unit
			2	3	4	5	6	7	9	10	11	12	13	14	16	17	18	19	20	21	23	24	25	26	27	28							
			1	2	3	4	5	6	7	8	9	10	11	12	13	14	15	16	17	18	19	20	21	22	23	24							
			CA8	SA8	J18	A1	A2	A3	A4	A5	A6	A7	A8	GND	B8	B7	B6	B5	B4	B3	B2	B1	G	SBA	CBA	V_{CC}		Min	Max	Min	Max	Min	Max	
t_{PHL4}	3003 (Fig. 4)	354	GND	GND	GND	OUT																6/	GND	1H	5/	4.5 V	SBA to A1							
		355	"	"	"		OUT														6/		"	"	"	"	SBA to A2							
		356	"	"	"			OUT												6/			"	"	"	"	SBA to A3							
		357	"	"	"				OUT										6/				"	"	"	"	SBA to A4							
		358	"	"	"					OUT								6/					"	"	"	"	SBA to A5							
		359	"	"	"						OUT						6/						"	"	"	"	SBA to A6							
		360	"	"	"							OUT				6/							"	"	"	"	SBA to A7							
		361	"	"	"								OUT		6/								"	"	"	"	SBA to A8							
		362	6/	1H	4.5 V	6/																OUT	"	GND	GND	"	SAB to B1							
		363	"	"	"		6/														3JT		"	"	"	"	SAB to B2							
		364	"	"	"			6/												OUT			"	"	"	"	SAB to B3							
		365	"	"	"				6/										OJT				"	"	"	"	SAB to B4							
		366	"	"	"					6/								OUT					"	"	"	"	SAB to B5							
		367	"	"	"						6/						OJT						"	"	"	"	SAB to B6							
		368	"	"	"							6/				OUT							"	"	"	"	SAB to B7							
		369	"	"	"								6/		OJT								"	"	"	"	SAB to B8							
t_{PLH4}	3003 (Fig. 4)	370 to 385	Same terminal conditions and measured terminals as specified above for t_{PHL4}.																									10	34	10	51	10	38	ns
t_{PZH2} 10/	3003 (Fig. 4)	386		GND	GND	OUT								GND								4.5 V	IH	GND		4.5 V	G to A1	6	43	6	57	6	43	ns
		387		"	"		OUT							"							4.5 V		"	"		"	G to A2	"	"	"	"	"	"	
		388		"	"			OUT						"						4.5 V			"	"		"	G to A3	"	"	"	"	"	"	
		389		"	"				OUT					"					4.5 V				"	"		"	G to A4	"	"	"	"	"	"	
		390		"	"					OUT				"				4.5 V					"	"		"	G to A5	"	"	"	"	"	"	
		391		"	"						OUT			"			4.5 V						"	"		"	G to A6	"	"	"	"	"	"	
		392		"	"							OUT		"		4.5 V							"	"		"	G to A7	"	"	"	"	"	"	
		393		"	"								OUT	"	4.5 V								"	"		"	G to A8	"	"	"	"	"	"	
		394		"	"	4.5 V								"								OUT	"	"		"	G to B1	"	"	"	"	"	"	
		395		"	"		4.5 V							"							3JT		"	"		"	G to B2	"	"	"	"	"	"	
		396		"	"			4.5 V						"						OUT			"	"		"	G to B3	"	"	"	"	"	"	
		397		"	"				4.5 V					"					OJT				"	"		"	G to B4	"	"	"	"	"	"	
		398		"	"					4.5 V				"				OUT					"	"		"	G to B5	"	"	"	"	"	"	
		399		"	"						4.5 V			"			OJT						"	"		"	G to B6	"	"	"	"	"	"	
		400		"	"							4.5 V		"		OUT							"	"		"	G to B7	"	"	"	"	"	"	
		401		"	"								4.5 V	"	OJT								"	"		"	G to B8	"	"	"	"	"	"	
t_{PZL2} 9/	3003 (Fig. 4)	402 to 417	Same terminal conditions (except GND replaces 4.5 V) and measured terminals as specified above for t_{PZH2}.																									"	"	"	"	"	"	"
t_{PHZ2} 10/	3003 (Fig. 4)	418 to 433	Same terminal conditions and measured terminals as specified above for t_{PZH2}.																									"	"	"	"	"	"	"
t_{PLZ3} 9/	3003 (Fig. 4)	434 to 449	Same terminal conditions and measured terminals as specified above for t_{PZL2}.																									"	"	"	"	"	"	"

See footnotes at end of table.

TABLE III. Group A inspection for device type 08 - Continued.

Symbol	MIL-STD-883 method	Case J / Case L / Test no.	Terminal conditions 1/																									Measured terminal	Test limits						Unit
			2	3	4	5	6	7	9	10	11	12	13	14	16	17	18	19	20	21	23	24	25	26	27	28		Subgroup 9 T_C = +25°C		Subgroup 10 T_C = +125°C		Subgroup 11 T_C = -55°C		
			1	2	3	4	5	6	7	8	9	10	11	12	13	14	15	16	17	18	19	20	21	22	23	24								
		Test no.	CAB	SAB	DIR	A1	A2	A3	A4	A5	A6	A7	A8	GND	B8	B7	B6	B5	B4	B3	B2	B1	G	SBA	CBA	V_{CC}		Min	Max	Min	Max	Min	Max	
t_{PZH3} 10/	3003 (Fig. 4)	450		GND	14	OUT								GND									IN	GND		4.5 V	DIR to A1	6	43	6	57	6	43	ns
		451		"	"		OUT							"							4.5 V		"	"		"	DIR to A2	"	"	"	"	"	"	"
		452		"	"			OUT						"						4.5 V			"	"		"	DIR to A3	"	"	"	"	"	"	"
		453		"	"				OUT					"					4.5 V				"	"		"	DIR to A4	"	"	"	"	"	"	"
		454		"	"					OUT				"				4.5 V					"	"		"	DIR to A5	"	"	"	"	"	"	"
		455		"	"						OUT			"			4.5 V						"	"		"	DIR to A6	"	"	"	"	"	"	"
		456		"	"							OUT		"		4.5 V							"	"		"	DIR to A7	"	"	"	"	"	"	"
		457		"	"								OUT	"	4.5 V								"	"		"	DIR to A8	"	"	"	"	"	"	"
		458		"	"	4.5 V								"								OUT	"	"		"	DIR to B1	"	"	"	"	"	"	"
		459		"	"		4.5 V							"							OUT		"	"		"	DIR to B2	"	"	"	"	"	"	"
		460		"	"			4.5 V						"						OUT			"	"		"	DIR to B3	"	"	"	"	"	"	"
		461		"	"				4.5 V					"					OUT				"	"		"	DIR to B4	"	"	"	"	"	"	"
		462		"	"					4.5 V				"				OUT					"	"		"	DIR to B5	"	"	"	"	"	"	"
		463		"	"						4.5 V			"			OUT						"	"		"	DIR to B6	"	"	"	"	"	"	"
		464		"	"							4.5 V		"		OUT							"	"		"	DIR to B7	"	"	"	"	"	"	"
		465		"	"								4.5 V	"	OUT								"	"		"	DIR to B8	"	"	"	"	"	"	"
t_{PZL3} 9/	3003 (Fig. 4)	466 to 481	Same terminal conditions (except GND replaces 4.5 V) and measured terminals as specified above for t_{PZH3}.																									"	"	"	"	"	"	"
t_{PHZ3} 10/	3003 (Fig. 4)	482 to 497	Same terminal conditions and measured terminals as specified above for t_{PZH3}.																									"	"	"	"	"	"	"
t_{PLZ3} 9/	3003 (Fig. 4)	498 to 513	Same terminal conditions and measured terminals as specified above for t_{PZL3}.																									"	"	"	"	"	"	"

See footnotes at end of table.

TABLE III. Group A inspection for device type 09.

Symbol	MIL-STD-883 method	Case 3	2	3	4	5	6	7	9	10	11	12	13	14	16	17	18	19	20	21	23	24	25	26	27	28	Measured terminal	Test limits: Subgroup 1 T_C = +25°C Min	Subgroup 1 Max	Subgroup 2 T_C = +125°C Min	Subgroup 2 Max	Subgroup 3 T_C = -55°C Min	Subgroup 3 Max	Unit
		Case L	1	2	3	4	5	6	7	8	9	10	11	12	13	14	15	16	17	18	19	20	21	22	23	24								
		Test no.	CAB	SAd	DIA	A1	A2	A3	A4	A5	A6	A7	Ad	GAD	B8	B7	B6	B5	B4	B3	B2	B1	E	SBA	CBA	V_{CC}								
V_{IC} (pos)		1	1 mA											1/												GND	CAB	0.4 1/	1.5					V
		2		1 mA										"												"	SAB	"	"					"
		3			1 mA									"												"	DIA	"	"					"
		4				1 mA								"												"	A1	"	"					"
		5					1 mA							"												"	A2	"	"					"
		6						1 mA						"												"	A3	"	"					"
		7							1 mA					"												"	A4	"	"					"
		8								1 mA				"												"	A5	"	"					"
		9									1 mA			"												"	A6	"	"					"
		10										1 mA		"												"	A7	"	"					"
		11											1 mA	"												"	A8	"	"					"
		12												"	1 mA											"	dB	"	"					"
		13												"		1 mA										"	B7	"	"					"
		14												"			1 mA									"	B6	"	"					"
		15												"				1 mA								"	B5	"	"					"
		16												"					1 mA							"	B4	"	"					"
		17												"						1 mA						"	B3	"	"					"
		18												"							1 mA					"	B2	"	"					"
		19												"								1 mA				"	B1	"	"					"
		20												"									1 mA			"	E	"	"					"
		21												"										1 mA		"	SBA	"	"					"
		22												"											1 mA	"	CBA	"	"					"
V_{IC} (neg)		23	-1 mA											GND												1/	CAB		-1.5					"
		24		-1 mA										"												"	SAB		"					"
		25			-1 mA									"												"	DIR		"					"
		26				-1 mA								"												"	A1		"					"
		27					-1 mA							"												"	A2		"					"
		28						-1 mA						"												"	A3		"					"
		29							-1 mA					"												"	A4		"					"
		30								-1 mA				"												"	A5		"					"
		31									-1 mA			"												"	A6		"					"
		32										-1 mA		"												"	A7		"					"
		33											-1 mA	"												"	A8		"					"
		34												"	-1 mA											"	dB		"					"
		35												"		-1 mA										"	B7		"					"
		36												"			-1 mA									"	B6		"					"
		37												"				-1 mA								"	B5		"					"
		38												"					-1 mA							"	B4		"					"
		39												"						-1 mA						"	B3		"					"
		40												"							-1 mA					"	B2		"					"
		41												"								-1 mA				"	B1		"					"
		42												"									-1 mA			"	E		"					"
		43												"										-1 mA		"	SBA		"					"
		44												"											-1 mA	"	CBA		"					"

Terminal conditions 1/

See footnotes at end of table.

TABLE III. Group A inspection for device type 09 - Continued.

Symbol	MIL-STD-883 Method	Case J / Case L / Test no.	Terminal conditions 1/																								Measured terminal	Test limits						Unit
			2	3	4	5	6	7	9	10	11	12	13	14	16	17	18	19	20	21	23	24	25	26	27	28		Subgroup 1 T_C = +25°C		Subgroup 2 T_C = +125°C		Subgroup 3 T_C = -55°C		
			1	2	3	4	5	6	7	8	9	10	11	12	13	14	15	16	17	18	19	20	21	22	23	24		Min	Max	Min	Max	Min	Max	
			CAB	SAB	DIR	A1	A2	A3	A4	A5	A6	A7	A8	GND	B8	B7	B6	B5	B4	B3	B2	B1	E	SBA	CBA	V_{CC}								
I_{CC}	3005	45	GND	GND	6 V	6 V	GND	6 V	GND	6 V	GND	6 V	GND	GND									GND	GND	GND	6 V	V_{CC}		-2		20			μA
		46	"	"	6 V	6 V	6 V	6 V	6 V	6 V	6 V	6 V	6 V	"									"	"	"	"	"		"		"				"
		47	"	"	GND									"	GND	6 V	GND	6 V	GND	6 V	GND	6 V	"	"	"	"	"		"		"				"
		48	"	"	GND									"	6 V	6 V	6 V	6 V	6 V	6 V	6 V	6 V	"	"	"	"	"		"		"				"
I_{CCZ}	3005	49	GND	GND	GND	6 V	6 V	6 V	6 V	6 V	6 V	6 V	6 V	"	GND	GND	GND	GND	GND	GND	GND	GND	6 V	GND	GND	"	"		0.2		10			"
		50	GND	GND	GND	GND	GND	GND	GND	GND	GND	GND	GND	"	6 V	6 V	6 V	6 V	GND	GND	GND	6 V	6 V	GND	GND	"	"		0.2		10			"
V_{OH3}	3006	51	1.2 V	1.2 V	1.2 V	-20 μA								"													A1	5.95		5.95		5.95		V
		52	"	"	"		-20 μA							"								1.2 V	1.2 V	1.2 V	1.2 V	6 V	A2	"		"		"		"
		53	"	"	"			-20 μA						"							1.2 V		"	"	"	"	A3	"		"		"		"
		54	"	"	"				-20 μA					"					1.2 V				"	"	"	"	A4	"		"		"		"
		55	"	"	"					-20 μA				"									"	"	"	"	A5	"		"		"		"
		56	"	"	"						-20 μA			"									"	"	"	"	A6	"		"		"		"
		57	"	"	"							-20 μA		"		1.2 V							"	"	"	"	A7	"		"		"		"
		58	"	"	"								-20 μA	"			1.2 V						"	"	"	"	A8	"		"		"		"
		59	"	"	4.2 V	1.2 V								"								-20 μA	"	"	"	"	B1	"		"		"		"
		60	"	"	"		1.2 V							"							-20 μA		"	"	"	"	B2	"		"		"		"
		61	"	"	"			1.2 V						"						-20 μA			"	"	"	"	B3	"		"		"		"
		62	"	"	"				1.2 V					"					-20 μA				"	"	"	"	B4	"		"		"		"
		63	"	"	"					1.2 V				"				-20 μA					"	"	"	"	B5	"		"		"		"
		64	"	"	"						1.2 V			"			-20 μA						"	"	"	"	B6	"		"		"		"
		65	"	"	"							1.2 V		"		-20 μA							"	"	"	"	B7	"		"		"		"
		66	"	"	"								1.2 V	"	-20 μA								"	"	"	"	B8	"		"		"		"
V_{OH5}	3006	67	1.2 V	1.2 V	1.2 V	7.8 mA								"								1.2 V	"	"	"	"	A1	5.48		5.4		5.48		"
		68	"	"	"		7.8 mA							"							1.2 V		"	"	"	"	A2	"		"		"		"
		69	"	"	"			7.8 mA						"						1.2 V			"	"	"	"	A3	"		"		"		"
		70	"	"	"				7.8 mA					"					1.2 V				"	"	"	"	A4	"		"		"		"
		71	"	"	"					7.8 mA				"				1.2 V					"	"	"	"	A5	"		"		"		"
		72	"	"	"						7.8 mA			"			1.2 V						"	"	"	"	A6	"		"		"		"
		73	"	"	"							7.8 mA		"		1.2 V							"	"	"	"	A7	"		"		"		"
		74	"	"	"								7.8 mA	"	1.2 V								"	"	"	"	A8	"		"		"		"
		75	"	"	4.2 V	1.2 V								"								-7.8 mA	"	"	"	"	B1	"		"		"		"
		76	"	"	"		1.2 V							"							-7.8 mA		"	"	"	"	B2	"		"		"		"
		77	"	"	"			1.2 V						"						-7.8 mA			"	"	"	"	B3	"		"		"		"
		78	"	"	"				1.2 V					"					-7.8 mA				"	"	"	"	B4	"		"		"		"
		79	"	"	"					1.2 V				"				-7.8 mA					"	"	"	"	B5	"		"		"		"
		80	"	"	"						1.2 V			"			-7.8 mA						"	"	"	"	B6	"		"		"		"
		81	"	"	"							1.2 V		"		-7.8 mA							"	"	"	"	B7	"		"		"		"
		82	"	"	"								1.2 V	"	-7.8 mA								"	"	"	"	B8	"		"		"		"
V_{OL3}	3007	83	1.2 V	1.2 V	1.2 V	20 μA								"								1.2 V	"	"	"	"	A1		.05		.05		.05	"
		84	"	"	"		20 μA							"							4.2 V		"	"	"	"	A2		"		"		"	"
		85	"	"	"			20 μA						"						4.2 V			"	"	"	"	A3		"		"		"	"
		86	"	"	"				20 μA					"					4.2 V				"	"	"	"	A4		"		"		"	"
		87	"	"	"					20 μA				"				4.2 V					"	"	"	"	A5		"		"		"	"
		88	"	"	"						20 μA			"			4.2 V						"	"	"	"	A6		"		"		"	"
		89	"	"	"							20 μA		"		4.2 V							"	"	"	"	A7		"		"		"	"
		90	"	"	"								20 μA	"									"	"	"	"	A8		"		"		"	"
		91	"	"	4.2 V	4.2 V								"								20 μA	"	"	"	"	B1		"		"		"	"
		92	"	"	"		4.2 V							"							20 μA		"	"	"	"	B2		"		"		"	"
		93	"	"	"			4.2 V						"						20 μA			"	"	"	"	B3		"		"		"	"
		94	"	"	"				4.2 V					"					20 μA				"	"	"	"	B4		"		"		"	"
		95	"	"	"					4.2 V				"				20 μA					"	"	"	"	B5		"		"		"	"
		96	"	"	"						4.2 V			"			20 μA						"	"	"	"	B6		"		"		"	"
		97	"	"	"							4.2 V		"		20 μA							"	"	"	"	B7		"		"		"	"
		98	"	"	"								4.2 V	"	20 μA								"	"	"	"	B8		"		"		"	"

See footnotes at end of table.

TABLE III. Group A inspection for device type 09 - Continued.

Symbol	MIL-STD-883 method	Case J	2	3	4	5	6	7	9	10	11	12	13	14	16	17	18	19	20	21	23	24	25	26	27	28	Measured terminal	Test limits Subgroup 1 T_C = +25°C Min	Subgroup 1 Max	Subgroup 2 T_C = +125°C Min	Subgroup 2 Max	Subgroup 3 T_C = -55°C Min	Subgroup 3 Max	Unit
		Case L	1	2	3	4	5	6	7	8	9	10	11	12	13	14	15	16	17	18	19	20	21	22	23	24								
		Test no.	CA8	SA8	DIR	A1	A2	A3	A4	A5	A6	A7	A8	GND	B8	B7	B6	B5	B4	B3	B2	B1	E	SBA	CBA	V_{CC}								
V_{OLS}	3007	99	1.2 V	1.2 V	1.2 V	7.8 mA								GND							4.2 V	4.2 V	1.2 V	1.2 V	1.2 V	6 V	A1		.20		0.4		.26	V
		100	"	"	"		7.8 mA							"									"	"	"	"	A2		"		"		"	"
		101	"	"	"			7.8 mA						"						4.2 V			"	"	"	"	A3		"		"		"	"
		102	"	"	"				7.8 mA					"					4.2 V				"	"	"	"	A4		"		"		"	"
		103	"	"	"					7.8 mA				"				4.2 V					"	"	"	"	A5		"		"		"	"
		104	"	"	"						7.8 mA			"			4.2 V						"	"	"	"	A6		"		"		"	"
		105	"	"	"							7.8 mA		"		4.2 V							"	"	"	"	A7		"		"		"	"
		106	"	"	4.2 V	4.2 V							7.8 mA	"	4.2 V								"	"	"	"	A8		"		"		"	"
		107	"	"	"		4.2 V							"							7.8 mA	7.8 mA	"	"	"	"	B1		"		"		"	"
		108	"	"	"			4.2 V						"						7.8 mA			"	"	"	"	B2		"		"		"	"
		109	"	"	"				4.2 V					"					7.8 mA				"	"	"	"	B3		"		"		"	"
		110	"	"	"					4.2 V				"				7.8 mA					"	"	"	"	B4		"		"		"	"
		111	"	"	"						4.2 V			"			7.8 mA						"	"	"	"	B5		"		"		"	"
		112	"	"	"							4.2 V		"		7.8 mA							"	"	"	"	B6		"		"		"	"
		113	"	"	"								4.2 V	"	7.8 mA								"	"	"	"	B7		"		"		"	"
		114	"	"	"									"									"	"	"	"	B8		"		"		"	"
I_{OS4}	3011	115	GND	GND	GND	GND								"								GND	GND	GND	GND	4 V	A1	-10	-135	-10	-135	-10	-135	μA
		116	"	"	"		GND							"							GND		"	"	"	"	A2	"	"	"	"	"	"	"
		117	"	"	"			GND						"						GND			"	"	"	"	A3	"	"	"	"	"	"	"
		118	"	"	"				GND					"					GND				"	"	"	"	A4	"	"	"	"	"	"	"
		119	"	"	"					GND				"				GND					"	"	"	"	A5	"	"	"	"	"	"	"
		120	"	"	"						GND			"			GND						"	"	"	"	A6	"	"	"	"	"	"	"
		121	"	"	"							GND		"		GND							"	"	"	"	A7	"	"	"	"	"	"	"
		122	"	"	4 V	GND							GND	"	GND							GND	"	"	"	"	A8	"	"	"	"	"	"	"
		123	"	"	"		GND							"							GND		"	"	"	"	B1	"	"	"	"	"	"	"
		124	"	"	"			GND						"						GND			"	"	"	"	B2	"	"	"	"	"	"	"
		125	"	"	"				GND					"					GND				"	"	"	"	B3	"	"	"	"	"	"	"
		126	"	"	"					GND				"				GND					"	"	"	"	B4	"	"	"	"	"	"	"
		127	"	"	"						GND			"			GND						"	"	"	"	B5	"	"	"	"	"	"	"
		128	"	"	"							GND		"		GND							"	"	"	"	B6	"	"	"	"	"	"	"
		129	"	"	"								GND	"	GND								"	"	"	"	B7	"	"	"	"	"	"	"
		130	"	"	"									"									"	"	"	"	B8	"	"	"	"	"	"	"
I_{IH}/ I_{SZH}		131			1.2 V	6 V								"								2/	2/	GND	2/	6 V	A1		.1		2.0			μA
		132			"		6 V							"							2/		"	"	"	"	A2		"		"			"
		133			"			6 V						"						2/			"	"	"	"	A3		"		"			"
		134			"				6 V					"					2/				"	"	"	"	A4		"		"			"
		135			"					6 V				"				2/					"	"	"	"	A5		"		"			"
		136			"						6 V			"			2/						"	"	"	"	A6		"		"			"
		137			"							6 V		"		2/							"	"	"	"	A7		"		"			"
		138			"								6 V	"									"	"	"	"	A8		"		"			"
		139	2/	GND	4.2 V	2/								"									"				B1		"		"			"
		140	"	"	"		2/							"							6 V	6 V	"				B2		"		"			"
		141	"	"	"			2/						"						6 V			"				B3		"		"			"
		142	"	"	"				2/					"					6 V				"				B4		"		"			"
		143	"	"	"					2/				"				6 V					"				B5		"		"			"
		144	"	"	"						2/			"			6 V						"				B6		"		"			"
		145	"	"	"							2/		"		6 V							"				B7		"		"			"
		146	"	"	"								2/	"	6 V								"				B8		"		"			"

See footnotes at end of table.

TABLE III. Group A inspection for device type 09 - Continued.

Symbol	MIL-STD-883 method	Case 3 / Case L	2 / 1	3 / 2	4 / 3	5 / 4	6 / 5	7 / 6	9 / 7	10 / 8	11 / 9	12 / 10	13 / 11	14 / 12	16 / 13	17 / 14	18 / 15	19 / 16	20 / 17	21 / 18	23 / 19	24 / 20	25 / 21	26 / 22	27 / 23	28 / 24	Measured Terminal	Test Limits: Subgroup 1 T_C = +25°C Min	Subgroup 1 Max	Subgroup 2 T_C = +125°C Min	Subgroup 2 Max	Subgroup 3 T_C = -55°C Min	Subgroup 3 Max	Unit
		Test no.	CAB	SAB	DIR	A1	A2	A3	A4	A5	A6	A7	A8	GND	B8	B7	B6	B5	B4	B3	B2	B1	E	SBA	CBA	V_{CC}								
I_{IL}/ I_{JZL}		147			1.2 V	GND								GND								2/	2/	GND	2/	6 V	A1		-.1		-2.0			μA
		148					GND																				A2							
		149						GND												2/	2/						A3							
		150							GND										2/								A4							
		151								GND								2/									A5							
		152									GND																A6							
		153										GND					2/										A7							
		154											GND			2/											A8							
		155	2/	GND	4.2 V	2/									2/						GND	GND					B1							
		156					2/																				B2							
		157						2/																			B3							
		158							2/										GND								B4							
		159								2/								GND									B5							
		160									2/						GND										B6							
		161										2/				GND											B7							
		162											2/		GND												B8							
I_{IH}	3010	163	6 V																								CAB		.05		.1			
		164		6 V																							SAB							
		165			6 V																						DIR							
		166																					6 V				E							
		167																						6 V			SBA							
		168																							6 V		CBA							
I_{IL}	3009	169	GND																								CAB		-0.5		-.1			
		170		GND																							SAB							
		171			GND																						DIR							
		172																					GND				E							
		173																						GND			SBA							
		174																							GND		CBA							
$C_{I/O}$		175	GND	GND	GND	3/																	6 V	GND	GND		A1		20					
		176					3/																				A2							
		177						3/																			A3							
		178							3/																		A4							
		179								3/																	A5							
		180									3/																A6							
		181										3/															A7							
		182											3/														A8							
		183			6 V										3/												B7							
		184														3/											B6							
		185															3/										B5							
		186																3/									B4							
		187																	3/								B3							
		188																		3/							B2							
		189																			3/						B1							
		190																				3/												
C_C		191	3/																							GND	CAB		13					
		192		3/																							SAB							
		193			3/																						DIR							
		194																					3/				E							
		195																						3/			SBA							
		196																							3/		CBA							

See footnotes at end of table.

TABLE III. Group A inspection for device type 09 - Continued.

Symbol	MIL-STD-883 method	Case 3 / Case L / Test no.	Terminal conditions 1/																									Measured terminal	Test limits						Units
			2	3	4	5	6	7	9	10	11	12	13	14	16	17	18	19	20	21	23	24	25	26	27	28		Subgroup 7 T_C = +25°C		Subgroup 8 T_C = +125°C		Subgroup 9 T_C = -55°C		
			1	2	3	4	5	6	7	8	9	10	11	12	13	14	15	16	17	18	19	20	21	22	23	24								
		Test no.	CA8	SA8	DIR	A1	A2	A3	A4	A5	A6	A7	A8	GND	B8	B7	B6	B5	B4	B3	B2	B1	E	SBA	CBA	V_{CC}		Min	Max	Min	Max	Min	Max	
Truth table tests 5/		197	B	B	A	B	B	B	B	B	B	B	B	4.5 V	H	H	H	H	H	H	H	H	B	B	B	4.5 V	6/							
		198	"	"	A	A	A	A	A	A	A	A	A	"	L	L	L	L	L	L	L	L	"	"	"	"								
		199	"	"	B	H	H	H	H	H	H	H	H	"	B	B	B	B	B	B	B	B	"	"	"	"								
		200	"	"	B	L	L	L	L	L	L	L	L	"	A	A	A	A	A	A	A	A	"	"	"	"								
		201	"	A	A	B	B	B	B	B	B	B	B	"	L	L	L	L	L	L	L	L	"	"	"	"								
		202	A	"	"	B	B	B	B	B	B	B	B	"	H	H	H	H	H	H	H	H	"	"	"	"								
		203	B	"	"	A	A	A	A	A	A	A	A	"	H	H	H	H	H	H	H	H	"	"	"	"								
		204	A	"	"	A	A	A	A	A	A	A	A	"	L	L	L	L	L	L	L	L	"	"	"	"								
		205	B	B	B	L	L	L	L	L	L	L	L	"	B	B	B	B	B	B	B	B	"	A	"	"								
		206	"	"	"	H	H	H	H	H	H	H	H	"	B	B	B	B	B	B	B	B	"	"	A	"								
		207	"	"	"	H	H	H	H	H	H	H	H	"	A	A	A	A	A	A	A	A	"	"	B	"								
		208	"	"	"	L	L	L	L	L	L	L	L	"	A	A	A	A	A	A	A	A	"	"	A	"								
		209	"	"	"	L	L	L	L	L	L	L	L	"	A	A	A	A	A	A	A	A	"	"	A	"								
																												Subgroup 9 T_C = +25°C 4/		Subgroup 10 T_C = +125°C		Subgroup 11 T_C = -55°C 4/		
																												Min	Max	Min	Max	Min	Max	
f_{MAX} 8/	3003	210	GND	GND	GND	OUT	OUT	OUT	OUT	OUT	OUT	OUT	OUT	GND	IN	IN	IN	IN	IN	IN	IN	IN	GND	GND	GND	4.5 V	A1	30		23		30		MHZ
		211	"	"	"									"									"	"	"	"	A2	"		"		"		"
		212	"	"	"									"									"	"	"	"	A3	"		"		"		"
		213	"	"	"									"									"	"	"	"	A4	"		"		"		"
		214	"	"	"									"									"	"	"	"	A5	"		"		"		"
		215	"	"	"									"									"	"	"	"	A6	"		"		"		"
		216	"	"	"									"									"	"	"	"	A7	"		"		"		"
		217	"	"	"									"									"	"	"	"	A8	"		"		"		"
		218	"	"	4.5 V	IN	IN	IN	IN	IN	IN	IN	IN	"									"	"	"	"	B8	"		"		"		"
		219	"	"	"									"									"	"	"	"	B7	"		"		"		"
		220	"	"	"									"									"	"	"	"	B6	"		"		"		"
		221	"	"	"									"									"	"	"	"	B5	"		"		"		"
		222	"	"	"									"									"	"	"	"	B4	"		"		"		"
		223	"	"	"									"									"	"	"	"	B3	"		"		"		"
		224	"	"	"									"									"	"	"	"	B2	"		"		"		"
		225	"	"	"									"									"	"	"	"	B1	"		"		"		"
t_{THL}	3004 (Fig. 4)	226	GND	GND	GND	OUT	OUT	OUT	OUT	OUT	OUT	OUT	OUT	"	IN	IN	IN	IN	IN	IN	IN	IN	"	"	"	"	A1	2	12	2	16	2	12	ns
		227	"	"	"									"									"	"	"	"	A2	"	"	"	"	"	"	"
		228	"	"	"									"									"	"	"	"	A3	"	"	"	"	"	"	"
		229	"	"	"									"									"	"	"	"	A4	"	"	"	"	"	"	"
		230	"	"	"									"									"	"	"	"	A5	"	"	"	"	"	"	"
		231	"	"	"									"									"	"	"	"	A6	"	"	"	"	"	"	"
		232	"	"	"									"									"	"	"	"	A7	"	"	"	"	"	"	"
		233	"	"	"									"									"	"	"	"	A8	"	"	"	"	"	"	"
		234	"	"	4.5 V	IN	IN	IN	IN	IN	IN	IN	IN	"									"	"	"	"	B8	"	"	"	"	"	"	"
		235	"	"	"									"									"	"	"	"	B7	"	"	"	"	"	"	"
		236	"	"	"									"									"	"	"	"	B6	"	"	"	"	"	"	"
		237	"	"	"									"									"	"	"	"	B5	"	"	"	"	"	"	"
		238	"	"	"									"									"	"	"	"	B4	"	"	"	"	"	"	"
		239	"	"	"									"									"	"	"	"	B3	"	"	"	"	"	"	"
		240	"	"	"									"									"	"	"	"	B2	"	"	"	"	"	"	"
		241	"	"	"									"									"	"	"	"	B1	"	"	"	"	"	"	"
t_{TLH}	3004 (Fig. 4)	242 to 257	Same tests, terminal conditions, and limits as specified above for t_{THL}.																									"	"	"	"	"	"	"

See footnotes at end of table.

TABLE III. Group A inspection for device type 09 - Continued.

Symbol	MIL-STD-883 method	Case 3 / Case C / Test no.	Terminal conditions 1/																									Measured terminal	Test limits: Subgroup 9, T_C = +25°C 4/ Min	Subgroup 9 Max	Subgroup 10, T_C = +125°C Min	Subgroup 10 Max	Subgroup 11, T_C = -55°C 4/ Min	Subgroup 11 Max	Unit
			2	3	4	5	6	7	9	10	11	12	13	14	16	17	18	19	20	21	23	24	25	26	27	28								
			1	2	3	4	5	6	7	8	9	10	11	12	13	14	15	16	17	18	19	20	21	22	23	24								
			CA8	SA8	DIR	A1	A2	A3	A4	A5	A6	A7	A8	GND	B8	B7	B6	B5	B4	B3	B2	B1	E	SBA	CBA	V_{CC}								
t_{PHL1}	3003 (Fig. 4)	258	GND	GND	GND	OUT	OUT	OUT	OUT	OUT	OUT	OUT	OUT	GND	IN	IN	IN	IN	Id	IN	Id	IN	GND	4.5 V	IN	4.5 V	CBA to A1	8	42	8	56	8	42	ns
		259	"	"	"									"									"	"	"	"	CBA to A2	"	"	"	"	"	"	"
		260	"	"	"									"									"	"	"	"	CBA to A3	"	"	"	"	"	"	"
		261	"	"	"									"									"	"	"	"	CBA to A4	"	"	"	"	"	"	"
		262	"	"	"									"									"	"	"	"	CBA to A5	"	"	"	"	"	"	"
		263	"	"	"									"									"	"	"	"	CBA to A6	"	"	"	"	"	"	"
		264	"	"	"									"									"	"	"	"	CBA to A7	"	"	"	"	"	"	"
		265	"	"	"									"									"	"	"	"	CBA to A8	"	"	"	"	"	"	"
		266	IN	4.5 V	4.5 V	IN	IN	IN	IN	Id	IN	IN	IN	"	IN	IN	IN	IN	OUT	OUT	OUT	OUT	"	"	"	"	CAB to B1	"	"	"	"	"	"	"
		267	"	"	"									"									"	"	"	"	CAB to B2	"	"	"	"	"	"	"
		268	"	"	"									"									"	"	"	"	CAB to B3	"	"	"	"	"	"	"
		269	"	"	"									"									"	"	"	"	CAB to B4	"	"	"	"	"	"	"
		270	"	"	"									"									"	"	"	"	CAB to B5	"	"	"	"	"	"	"
		271	"	"	"									"									"	"	"	"	CAB to B6	"	"	"	"	"	"	"
		272	"	"	"									"									"	"	"	"	CAB to B7	"	"	"	"	"	"	"
		273	"	"	"									"	OUT	OUT	OUT	OUT					"	"	"	"	CAB to B8	"	"	"	"	"	"	"
t_{PLH1}	3003 (Fig. 4)	274 to 289	Same terminal conditions and measured terminals as specified above for t_{PHL1}.																									"	"	"	"	"	"	"
t_{PHL2}	3003 (Fig. 4)	290	GND	GND	GND	OUT	OUT	OUT	OUT	OUT	OUT	OUT	OUT	GND	IN	IN	IN	IN	Id	IN	Id	IN	GND	GND	GND	4.5 V	B1 to A1	5	30	5	40	5	30	ns
		291	"	"	"									"									"	"	"	"	B2 to A2	"	"	"	"	"	"	"
		292	"	"	"									"									"	"	"	"	B3 to A3	"	"	"	"	"	"	"
		293	"	"	"									"									"	"	"	"	B4 to A4	"	"	"	"	"	"	"
		294	"	"	"									"									"	"	"	"	B5 to A5	"	"	"	"	"	"	"
		295	"	"	"									"									"	"	"	"	B6 to A6	"	"	"	"	"	"	"
		296	"	"	"									"									"	"	"	"	B7 to A7	"	"	"	"	"	"	"
		297	"	"	"									"									"	"	"	"	B8 to A8	"	"	"	"	"	"	"
		298	"	"	4.5 V	IN	IN	IN	IN	Id	IN	IN	IN	"	IN	IN	IN	IN	OUT	OUT	OUT	OUT	"	"	"	"	A1 to B1	"	"	"	"	"	"	"
		299	"	"	"									"									"	"	"	"	A2 to B2	"	"	"	"	"	"	"
		300	"	"	"									"									"	"	"	"	A3 to B3	"	"	"	"	"	"	"
		301	"	"	"									"									"	"	"	"	A4 to B4	"	"	"	"	"	"	"
		302	"	"	"									"									"	"	"	"	A5 to B5	"	"	"	"	"	"	"
		303	"	"	"									"									"	"	"	"	A6 to B6	"	"	"	"	"	"	"
		304	"	"	"									"									"	"	"	"	A7 to B7	"	"	"	"	"	"	"
		305	"	"	"									"	OUT	OUT	OUT	OUT					"	"	"	"	A8 to B8	"	"	"	"	"	"	"
t_{PLH2}	3003 (Fig. 4)	306 to 321	Same terminal conditions and measured terminals as specified above for t_{PHL2}.																									"	"	"	"	"	"	"
t_{PHL3}	3003 (Fig. 4)	322	GND	GND	GND	OUT	OUT	OUT	OUT	OUT	OUT	OUT	OUT	"	5/	5/	5/	5/	5/	5/	5/	5/	GND	IN	5/	4.5 V	SBA to A1	13	38	13	51	10	38	ns
		323	"	"	"									"									"	"	"	"	SBA to A2	"	"	"	"	"	"	"
		324	"	"	"									"									"	"	"	"	SBA to A3	"	"	"	"	"	"	"
		325	"	"	"									"									"	"	"	"	SBA to A4	"	"	"	"	"	"	"
		326	"	"	"									"									"	"	"	"	SBA to A5	"	"	"	"	"	"	"
		327	"	"	"									"									"	"	"	"	SBA to A6	"	"	"	"	"	"	"
		328	"	"	"									"									"	"	"	"	SBA to A7	"	"	"	"	"	"	"
		329	"	"	"									"									"	"	"	"	SBA to A8	"	"	"	"	"	"	"
		330	5/	IN	4.5 V	5/	5/	5/	5/	5/	5/	5/	5/	"									"	GND	GND	"	SA3 to B1	"	"	"	"	"	"	"
		331	"	"	"									"									"	"	"	"	SBA to B2	"	"	"	"	"	"	"
		332	"	"	"									"									"	"	"	"	SBA to B3	"	"	"	"	"	"	"
		333	"	"	"									"									"	"	"	"	SBA to B4	"	"	"	"	"	"	"
		334	"	"	"									"									"	"	"	"	SBA to B5	"	"	"	"	"	"	"
		335	"	"	"									"									"	"	"	"	SBA to B6	"	"	"	"	"	"	"
		336	"	"	"									"									"	"	"	"	SBA to B7	"	"	"	"	"	"	"
		337	"	"	"									"	OUT	OUT	OUT	OUT					"	"	"	"	SBA to B8	"	"	"	"	"	"	"

See footnotes at end of table.

TABLE III. Group A inspection for device type 09 - Continued.

Symbol	MIL-STD-883 method	Case J / Case L / Test no.	Terminal conditions 1/																									Measured terminal	Test limits: Subgroup 9 T_C = +25°C 4/ Min	Subgroup 9 Max	Subgroup 10 T_C = +125°C Min	Subgroup 10 Max	Subgroup 11 T_C = -55°C 4/ Min	Subgroup 11 Max	Unit
		J	2	3	4	5	6	7	9	10	11	12	13	14	16	17	18	19	20	21	23	24	25	26	27	28								
		L	1	2	3	4	5	6	7	8	9	10	11	12	13	14	15	16	17	18	19	20	21	22	23	24								
		Test no.	CAB	SAB	DIR	A1	A2	A3	A4	A5	A6	A7	A8	GND	B8	B7	B6	B5	B4	B3	B2	B1	E	SBA	CBA	V_{CC}								
t_{PLH3}	3003 (Fig. 4)	338 to 353	Same terminal conditions and measured terminals as specified above for t_{PHL3}.																										10	30	10	51	10	30	ns
t_{PHL4}	3003 (Fig. 4)	354	GND	GND	GND	OUT								•									GND	IN	6/	4.5 V	SBA to A1	•	•	•	•	•	•	•
		355	•	•	•		OUT							•									•	•	•	•	SBA to A2	•	•	•	•	•	•	•
		356	•	•	•			OUT						•							6/		•	•	•	•	SBA to A3	•	•	•	•	•	•	•
		357	•	•	•				OUT					•					6/	6/			•	•	•	•	SBA to A4	•	•	•	•	•	•	•
		358	•	•	•					OUT				•				6/					•	•	•	•	SBA to A5	•	•	•	•	•	•	•
		359	•	•	•						OUT			•			6/						•	•	•	•	SBA to A6	•	•	•	•	•	•	•
		360	•	•	•							OUT		•		6/							•	•	•	•	SBA to A7	•	•	•	•	•	•	•
		361	•	•	•								OUT	•	6/								•	•	•	•	SBA to A8	•	•	•	•	•	•	•
		362	6/	1d	4.5 V	6/								•								OUT	•	GND	GND	•	SAB to B1	•	•	•	•	•	•	•
		363	•	•	•		6/							•							OUT		•	•	•	•	SAB to B2	•	•	•	•	•	•	•
		364	•	•	•			6/						•						OUT			•	•	•	•	SAB to B3	•	•	•	•	•	•	•
		365	•	•	•				6/					•					OUT.				•	•	•	•	SAB to B4	•	•	•	•	•	•	•
		366	•	•	•					6/				•				OUT					•	•	•	•	SAB to B5	•	•	•	•	•	•	•
		367	•	•	•						6/			•			OUT						•	•	•	•	SAB to B6	•	•	•	•	•	•	•
		368	•	•	•							6/		•		OUT							•	•	•	•	SAB to B7	•	•	•	•	•	•	•
		369	•	•	•								6/	•	OUT								•	•	•	•	SAB to B8	•	•	•	•	•	•	•
t_{PLH4}	3003 (Fig. 4)	370 to 385	Same terminal conditions and measured terminals as specified above for t_{PHL4}.																										10	30	10	51	10	30	ns
t_{PZH2} 10/	3003 (Fig. 4)	386		GND	GND	OUT								GND												4.5 V	E to A1	6	43	6	57	6	43	ns
		387		•	•		OUT							•												•	E to A2	•	•	•	•	•	•	•
		388		•	•			OUT						•												•	E to A3	•	•	•	•	•	•	•
		389		•	•				OUT					•												•	E to A4	•	•	•	•	•	•	•
		390		•	•					OUT				•												•	E to A5	•	•	•	•	•	•	•
		391		•	•						OUT			•												•	E to A6	•	•	•	•	•	•	•
		392		•	•							OUT		•												•	E to A7	•	•	•	•	•	•	•
		393		•	•								OUT	•												•	E to A8	•	•	•	•	•	•	•
		394		•	•	GND								•												•	E to B1	•	•	•	•	•	•	•
		395		•	•		GND							•												•	E to B2	•	•	•	•	•	•	•
		396		•	•			GND						•												•	E to B3	•	•	•	•	•	•	•
		397		•	•				GND					•												•	E to B4	•	•	•	•	•	•	•
		398		•	•					GND				•												•	E to B5	•	•	•	•	•	•	•
		399		•	•						GND			•												•	E to B6	•	•	•	•	•	•	•
		400		•	•							GND		•												•	E to B7	•	•	•	•	•	•	•
		401		•	•								GND	•	OUT											•	E to B8	•	•	•	•	•	•	•
t_{PZL2} 9/	3003 (Fig. 4)	402 to 417	Same terminal conditions (except GND replaces 4.5 V) and measured terminals as specified above for t_{PZH2}.																										•	•	•	•	•	•	•
t_{PHZ2} 10/	3003 (Fig. 4)	418 to 433	Same terminal conditions and measured terminals as specified above for t_{PZH2}.																										•	•	•	•	•	•	•
t_{PLZ3} 9/	3003 (Fig. 4)	434 to 449	Same terminal conditions and measured terminals as specified above for t_{PZL2}.																										•	•	•	•	•	•	•

See footnotes at end of table.

TABLE III. Group A inspection for device type 09 - Continued.

Symbol	MIL-STD-883 method	Case 3 / Case L / Test no.	Terminal conditions 1/																									Measured terminal	Test limits						Unit
			2	3	4	5	6	7	9	10	11	12	13	14	16	17	18	19	20	21	23	24	25	26	27	28		Subgroup 9 T_C = +25°C 4/		Subgroup 10 T_C = +125°C		Subgroup 11 T_C = -55°C 4/		
			1	2	3	4	5	6	7	8	9	10	11	12	13	14	15	16	17	18	19	20	21	22	23	24		Min	Max	Min	Max	Min	Max	
			CAU	SAU	DIR	A1	A2	A3	A4	A5	A6	A7	A8	GAU	B8	B7	B6	B5	B4	B3	B2	B1	G	SBA	CBA	V_{CC}								
t_{PZH3} 10/	3003 (Fig. 4)	450		GAU	IN	OUT	OUT	OUT	OUT	OUT	OUT	OUT	OUT	GAU	GND	GND	GND	GND	GAU	GND	GAU	GND	GND	GND		4.5 V	DIR to A1	6	43	6	57	6	43	ns
		451		"	"									"									"	"		"	JIR to A2	"	"	"	"	"	"	"
		452		"	"									"									"	"		"	JIR to A3	"	"	"	"	"	"	"
		453		"	"									"									"	"		"	JIR to A4	"	"	"	"	"	"	"
		454		"	"									"									"	"		"	DIR to A5	"	"	"	"	"	"	"
		455		"	"									"									"	"		"	JIR to A6	"	"	"	"	"	"	"
		456		"	"									"									"	"		"	DIR to A7	"	"	"	"	"	"	"
		457		"	"									"									"	"		"	JIR to A8	"	"	"	"	"	"	"
		458		"	"	GAU								"									"	"		"	DIR to B1	"	"	"	"	"	"	"
		459		"	"		GND	GAU						"							OUT	OUT	"	"		"	JIR to B2	"	"	"	"	"	"	"
		460		"	"				GND	GAU				"						OUT			"	"		"	DIR to B3	"	"	"	"	"	"	"
		461		"	"						GND			"					OUT				"	"		"	JIR to B4	"	"	"	"	"	"	"
		462		"	"							GAU		"			OUT						"	"		"	DIR to B5	"	"	"	"	"	"	"
		463		"	"								GND	"									"	"		"	JIR to B6	"	"	"	"	"	"	"
		464		"	"									"	OUT	OUT							"	"		"	DIR to B7	"	"	"	"	"	"	"
		465		"	"									"									"	"		"	JIR to B8	"	"	"	"	"	"	"
t_{PZL3} 9/	3003 (Fig. 4)	466 to 481	Same terminal conditions (except GND replaces 4.5 V) and measured terminals as specified above for t_{PZH3}.																										"	"	"	"	"	"	"
t_{PHZ3} 10/	3003 (Fig. 4)	482 to 497	Same terminal conditions and measured terminals as specified above for t_{PZH3}.																										"	"	"	"	"	"	ns
t_{PLZ3} 9/	3003 (Fig. 4)	498 to 513	Same terminal conditions and measured terminals as specified above for t_{PZL3}.																										"	"	"	"	"	"	ns

See footnotes at end of table.

TABLE III. Group A inspection for device type 53.

Symbol	MIL-STD-883 method	Cases 2, R	Terminal conditions 1/																					Measured terminal	Test limits						Unit
			1	2	3	4	5	6	7	8	9	10	11	12	13	14	15	16	17	18	19	20			Subgroup 1 T_C = +25°C		Subgroup 2 T_C = +125°C		Subgroup 3 T_C = -55°C		
		Test no.	DIR	A1	A2	A3	A4	A5	A6	A7	A8	GND	B8	B7	B6	B5	B4	B3	B2	B1	$\overline{E}$	V_{CC}			Min	Max	Min	Max	Min	Max	
V_{IC} (pos)		1	1 mA									1/										GND	DIR		1/ 0.4	1.5					V
		2		1 mA								"										"	A1		"	"					"
		3			1 mA							"										"	A2		"	"					"
		4				1 mA						"										"	A3		"	"					"
		5					1 mA					"										"	A4		"	"					"
		6						1 mA				"										"	A5		"	"					"
		7							1 mA			"										"	A6		"	"					"
		8								1 mA		"										"	A7		"	"					"
		9									1 mA	"										"	A8		"	"					"
		10										"	1 mA									"	B8		"	"					"
		11										"		1 mA								"	B7		"	"					"
		12										"			1 mA							"	B6		"	"					"
		13										"				1 mA						"	B5		"	"					"
		14										"					1 mA					"	B4		"	"					"
		15										"						1 mA				"	B3		"	"					"
		16										"							1 mA			"	B2		"	"					"
		17										"								1 mA		"	B1		"	"					"
		18										"									1 mA	"	$\overline{E}$		"	"					"
V_{IC} (neg)		19	-1 mA									"										1/	DIR			-1.5					"
		20		-1 mA								"										"	A1			"					"
		21			-1 mA							"										"	A2			"					"
		22				-1 mA						"										"	A3			"					"
		23					-1 mA					"										"	A4			"					"
		24						-1 mA				"										"	A5			"					"
		25							-1 mA			"										"	A6			"					"
		26								-1 mA		"										"	A7			"					"
		27									-1 mA	"										"	A8			"					"
		28										"	-1 mA									"	B8			"					"
		29										"		-1 mA								"	B7			"					"
		30										"			-1 mA							"	B6			"					"
		31										"				-1 mA						"	B5			"					"
		32										"					-1 mA					"	B4			"					"
		33										"						-1 mA				"	B3			"					"
		34										"							-1 mA			"	B2			"					"
		35										"								-1 mA		"	B1			"					"
		36										"									-1 mA	"	$\overline{E}$			"					"
I_{CC}	3005	37	GND									GND	GND	5.5 V	GND	5.5 V	GND	5.5 V	GND	5.5 V	GND	5.5 V	V_{CC}			.2		20			μA
		38	GND									"	5.5 V	5.5 V	5.5 V	5.5 V	5.5 V	5.5 V	5.5 V	5.5 V	"	"	"			"		"			"
		39	6 V	GND	6 V	GND	6 V	GND	6 V	GND	6 V	"									"	"	"			"		"			"
		40	6 V	6 V	6 V	6 V	6 V	6 V	6 V	6 V	6 V	"									"	"	"			"		"			"
I_{CCZ}		41	GND									"									5.5 V	"	"			"		10			"
I_{CCA}		42	2.4 V									"									5.5 V	"	"			.430		1.5			μA
		43	0.8 V									"	2.4 V	0.8 V	0.8 V	0.8 V	0.8 V	0.8 V	0.8 V	0.8 V	0.8 V	"	"			.195		"			"
		44	0.8 V	0.8 V	0.8 V	0.8 V	0.8 V	0.8 V	0.8 V	0.8 V	0.8 V	"									2.4 V	"	"			.735		"			"
		45	2.4 V	2.4 V	0.8 V	0.8 V	0.8 V	0.8 V	0.8 V	0.8 V	0.8 V	"									5.5 V	"	"			.195		"			"

See footnotes at end of table.

TABLE III. Group A inspection for device type 53 - Continued.

Symbol	MIL-STD-883 method	Cases 2, R	Terminal conditions 1/																				Measured terminal	Test limits						Unit
			1	2	3	4	5	6	7	8	9	10	11	12	13	14	15	16	17	18	19	20		Subgroup 1 T_C = +25°C		Subgroup 2 T_C = +125°C		Subgroup 3 T_C = -55°C		
		Test no.	GND	A1	A2	A3	A4	A5	A6	A7	A8	GND	B8	B7	B6	B5	B4	B3	B2	B1	E	V_{CC}		Min	Max	Min	Max	Min	Max	
V_{OH6}	3006	46	0.8 V	-20 μA								GND								2.0 V	0.8 V	4.5 V	A1	4.4		4.4		4.4		V
		47	"		-20 μA							"							2.0 V		"	"	A2	"		"		"		"
		48	"			-20 μA						"						2.0 V			"	"	A3	"		"		"		"
		49	"				-20 μA					"					2.0 V				"	"	A4	"		"		"		"
		50	"					-20 μA				"				2.0 V					"	"	A5	"		"		"		"
		51	"						-20 μA			"			2.0 V						"	"	A6	"		"		"		"
		52	"							-20 μA		"		2.0 V							"	"	A7	"		"		"		"
		53	"								-20 μA	"	2.0 V								"	"	A8	"		"		"		"
		54	2.0 V	2.0 V								"								-20 μA	"	"	B1	"		"		"		"
		55	"		2.0 V							"							-20 μA		"	"	B2	"		"		"		"
		56	"			2.0 V						"						-20 μA			"	"	B3	"		"		"		"
		57	"				2.0 V					"					-20 μA				"	"	B4	"		"		"		"
		58	"					2.0 V				"				-20 μA					"	"	B5	"		"		"		"
		59	"						2.0 V			"			-20 μA						"	"	B6	"		"		"		"
		60	"							2.0 V		"		-20 μA							"	"	B7	"		"		"		"
		61	"								2.0 V	"	-20 μA								"	"	B8	"		"		"		"
V_{OH7}	3006	62	0.8 V	-6.0 mA								"								2.0 V	"	5.5 V	A1	3.98		3.7		3.98		"
		63	"		-6.0 mA							"							2.0 V		"	"	A2	"		"		"		"
		64	"			-6.0 mA						"						2.0 V			"	"	A3	"		"		"		"
		65	"				-6.0 mA					"					2.0 V				"	"	A4	"		"		"		"
		66	"					-6.0 mA				"				2.0 V					"	"	A5	"		"		"		"
		67	"						-6.0 mA			"			2.0 V						"	"	A6	"		"		"		"
		68	"							-6.0 mA		"		2.0 V							"	"	A7	"		"		"		"
		69	"								-6.0 mA	"	2.0 V								"	"	A8	"		"		"		"
		70	2.0 V	2.0 V								"								-6.0 mA	"	"	B1	"		"		"		"
		71	"		2.0 V							"							-6.0 mA		"	"	B2	"		"		"		"
		72	"			2.0 V						"						-6.0 mA			"	"	B3	"		"		"		"
		73	"				2.0 V					"					-6.0 mA				"	"	B4	"		"		"		"
		74	"					2.0 V				"				-6.0 mA					"	"	B5	"		"		"		"
		75	"						2.0 V			"			-6.0 mA						"	"	B6	"		"		"		"
		76	"							2.0 V		"		-6.0 mA							"	"	B7	"		"		"		"
		77	"								2.0 V	"	-6.0 mA								"	"	B8	"		"		"		"
V_{OL6}	3007	78	0.8 V	20 μA								"								0.8 V	"	4.5 V	A1		0.1		0.1		0.1	"
		79	"		20 μA							"						0.8 V	0.8 V		"	"	A2		"		"		"	"
		80	"			20 μA						"					0.8 V				"	"	A3		"		"		"	"
		81	"				20 μA					"				0.8 V					"	"	A4		"		"		"	"
		82	"					20 μA				"			0.8 V						"	"	A5		"		"		"	"
		83	"						20 μA			"		0.8 V							"	"	A6		"		"		"	"
		84	"							20 μA		"									"	"	A7		"		"		"	"
		85	"								20 μA	"	0.8 V								"	"	A8		"		"		"	"
		86	2.0 V	0.8 V								"								20 μA	"	"	B1		"		"		"	"
		87	"		0.8 V							"							20 μA		"	"	B2		"		"		"	"
		88	"			0.8 V						"						20 μA			"	"	B3		"		"		"	"
		89	"				0.8 V					"					20 μA				"	"	B4		"		"		"	"
		90	"					0.8 V				"				20 μA					"	"	B5		"		"		"	"
		91	"						0.8 V			"			20 μA						"	"	B6		"		"		"	"
		92	"							0.8 V		"		20 μA							"	"	B7		"		"		"	"
		93	"								0.8 V	"	20 μA								"	"	B8		"		"		"	"

See footnotes at end of table.

TABLE III. Group A inspection for device type 53 - Continued.

Symbol	MIL-STD-883 method	Cases 2, R	Terminal conditions 1/																					Measured terminal	Test limits						Unit
			1	2	3	4	5	6	7	8	9	10	11	12	13	14	15	16	17	18	19	20			Subgroup 1 T_C = +25°C		Subgroup 2 T_C = +125°C		Subgroup 3 T_C = -55°C		
		Test no.	DIR	A1	A2	A3	A4	A5	A6	A7	A8	GND	B8	B7	B6	B5	B4	B3	B2	B1	E	V_{CC}			Min	Max	Min	Max	Min	Max	
V_{OL7}	3007	94	0.8 V	6.0 mA								GND								0.8 V	0.8 V	5.5 V	A1		.26		0.4		.26	V
		95	"		6.0 mA							"							0.8 V		"	"	A2		"		"		"	"
		96	"			6.0 mA						"						0.8 V			"	"	A3		"		"		"	"
		97	"				6.0 mA					"					0.8 V				"	"	A4		"		"		"	"
		98	"					6.0 mA				"				0.8 V					"	"	A5		"		"		"	"
		99	"						6.0 mA			"			0.8 V						"	"	A6		"		"		"	"
		100	"							6.0 mA		"		0.8 V							"	"	A7		"		"		"	"
		101	"								6.0 mA	"	0.8 V								"	"	A8		"		"		"	"
		102	2.0 V	0.8 V								"								6.0 mA	"	"	B1		"		"		"	"
		103	"		0.8 V							"							6.0 mA		"	"	B2		"		"		"	"
		104	"			0.8 V						"						6.0 mA			"	"	B3		"		"		"	"
		105	"				0.8 V					"					6.0 mA				"	"	B4		"		"		"	"
		106	"					0.8 V				"				6.0 mA					"	"	B5		"		"		"	"
		107	"						0.8 V			"			6.0 mA						"	"	B6		"		"		"	"
		108	"							0.8 V		"		6.0 mA							"	"	B7		"		"		"	"
		109	"								0.8 V	"	6.0 mA								"	"	B8		"		"		"	"
I_{OS4}	3011	110	GND	GND								"								4 V	GND	4 V	A1	-10	-135	-10	-135	-10	-135	mA
		111	"		GND							"							4 V		"	"	A2	"	"	"	"	"	"	"
		112	"			GND						"						4 V			"	"	A3	"	"	"	"	"	"	"
		113	"				GND					"					4 V				"	"	A4	"	"	"	"	"	"	"
		114	"					GND				"				4 V					"	"	A5	"	"	"	"	"	"	"
		115	"						GND			"			4 V						"	"	A6	"	"	"	"	"	"	"
		116	"							GND		"		4 V							"	"	A7	"	"	"	"	"	"	"
		117	"								GND	"	4 V								"	"	A8	"	"	"	"	"	"	"
		118	4 V	4 V								"								GND	"	"	B1	"	"	"	"	"	"	"
		119	"		4 V							"							GND		"	"	B2	"	"	"	"	"	"	"
		120	"			4 V						"						GND			"	"	B3	"	"	"	"	"	"	"
		121	"				4 V					"					GND				"	"	B4	"	"	"	"	"	"	"
		122	"					4 V				"				GND					"	"	B5	"	"	"	"	"	"	"
		123	"						4 V			"			GND						"	"	B6	"	"	"	"	"	"	"
		124	"							4 V		"		GND							"	"	B7	"	"	"	"	"	"	"
		125	"								4 V	"	GND								"	"	B8	"	"	"	"	"	"	"
I_{IW}/ I_{JZH}		126	.8 V	5.5 V								"								2/	2/	5.5 V	A1		.1		2.0			μA
		127	"		5.5 V							"							2/		"	"	A2		"		"			"
		128	"			5.5 V						"						2/			"	"	A3		"		"			"
		129	"				5.5 V					"					2/				"	"	A4		"		"			"
		130	"					5.5 V				"				2/					"	"	A5		"		"			"
		131	"						5.5 V			"			2/						"	"	A6		"		"			"
		132	"							5.5 V		"		2/							"	"	A7		"		"			"
		133	"								5.5 V	"	2/								"	"	A8		"		"			"
		134	2.0 V	2/								"								5.5 V	"	"	B1		"		"			"
		135	"		2/							"							5.5 V		"	"	B2		"		"			"
		136	"			2/						"						5.5 V			"	"	B3		"		"			"
		137	"				2/					"					5.5 V				"	"	B4		"		"			"
		138	"					2/				"				5.5 V					"	"	B5		"		"			"
		139	"						2/			"			5.5 V						"	"	B6		"		"			"
		140	"							2/		"		5.5 V							"	"	B7		"		"			"
		141	"								2/	"	5.5 V								"	"	B8		"		"			"

See footnotes at end of table.

TABLE III. Group A inspection for device type 53 - Continued.

Symbol	MIL-STD-883 method	Cases 2, R	Terminal conditions 1/																				Measured terminal	Test limits						Unit
			1	2	3	4	5	6	7	8	9	10	11	12	13	14	15	16	17	18	19	20		Subgroup 1 T_C = +25°C		Subgroup 2 T_C = +125°C		Subgroup 3 T_C = -55°C		
		Test no.	DIR	A1	A2	A3	A4	A5	A6	A7	A8	GND	B8	B7	B6	B5	B4	B3	B2	B1	$\overline{G}$	V_{CC}		Min	Max	Min	Max	Min	Max	
I_{IL}/ I_{OZL}		142	.8 V	GND								GND								2/	2/	5.5 V	A1		-.1		2.0			µA
		143	"		GND							"							2/		"	"	A2		"		"			"
		144	"			GND						"						2/			"	"	A3		"		"			"
		145	"				GND					"					2/				"	"	A4		"		"			"
		146	"					GND				"				2/					"	"	A5		"		"			"
		147	"						GND			"			2/						"	"	A6		"		"			"
		148	"							GND		"		2/							"	"	A7		"		"			"
		149	"								GND	"	2/								"	"	A8		"		"			"
		150	2.0 V	2/								"							GND	GND	"	"	B1		"		"			"
		151	"		2/							"									"	"	B2		"		"			"
		152	"			2/						"						GND			"	"	B3		"		"			"
		153	"				2/					"					GND				"	"	B4		"		"			"
		154	"					2/				"				GND					"	"	B5		"		"			"
		155	"						2/			"			GND						"	"	B6		"		"			"
		156	"							2/		"		GND							"	"	B7		"		"			"
		157	"								2/	"	GND								"	"	B8		"		"			"
I_{IH}	3010	158	5.5 V									"										"	DIR		.05		.1			"
		159										"									5.5 V	"	$\overline{G}$		.05		.1			"
I_{IL}	3009	160	GND									"										"	DIR		-.05		-.1			"
		161										"									GND	"	$\overline{G}$		-.05		-.1			"
$C_{I/O}$		162	GND	3/								"									5.5 V	"	A1		20					pF
		163	"		3/							"									"	"	A2		"					"
		164	"			3/						"									"	"	A3		"					"
		165	"				3/					"									"	"	A4		"					"
		166	"					3/				"									"	"	A5		"					"
		167	"						3/			"									"	"	A6		"					"
		168	"							3/		"									"	"	A7		"					"
		169	"								3/	"									"	"	A8		"					"
		170	5.5 V									"	3/								"	"	B8		"					"
		171	"									"		3/							"	"	B7		"					"
		172	"									"			3/						"	"	B6		"					"
		173	"									"				3/					"	"	B5		"					"
		174	"									"					3/				"	"	B4		"					"
		175	"									"						3/			"	"	B3		"					"
		176	"									"							3/		"	"	B2		"					"
		177	"									"								3/	"	"	B1		"					"
C_C		178	3/									"										GND	DIR		10					"
		179										"									3/	GND	$\overline{G}$		10					"
																								Test limits						Unit
																								Subgroup 7 T_C = +25°C		Subgroup 8 T_C = +125°C		Subgroup 8 T_C = -55°C		
																								Min	Max	Min	Max	Min	Max	
Truth table tests 5/		180	A	A	A	A	A	A	A	A	A	"	H	H	H	H	H	H	H	H	B	4.5 V	6/							
		181	A	B	B	B	B	B	B	B	B	"	L	L	L	L	L	L	L	L	B	"	"							
		182	B	H	H	H	H	H	H	H	H	"	A	A	A	A	A	A	A	A	B	"	"							
		183	B	L	L	L	L	L	L	L	L	"	B	B	B	B	B	B	B	B	B	"	"							
		184	B	H	H	H	H	H	H	H	H	"	H	H	H	H	H	H	H	H	A	"	"							

See footnotes at end of table.

TABLE III. Group A inspection for device type 53 - Continued.

Symbol	MIL-STD-883 method	Cases 2, R	Terminal conditions 1/																					Measured terminal	Test limits						Unit
			1	2	3	4	5	6	7	8	9	10	11	12	13	14	15	16	17	18	19	20			Subgroup 9 T_C = +25°C 4/		Subgroup 10 T_C = +125°C		Subgroup 11 T_C = -55°C 4/		
		Test no.	DIR	A1	A2	A3	A4	A5	A6	A7	A8	GND	B8	B7	B6	B5	B4	B3	B2	B1	G	V_{CC}			Min	Max	Min	Max	Min	Max	
t_{THL}	3004 (Fig. 4)	185	GND	OUT	OUT	OUT	OUT	OUT	OUT	OUT	OUT	GND	IN	IN	IN	IN	IN	IN	IN	IN	GND	4.5 V	A1	2	12	2	16	2	12	ns
		186	"									"									"	"	A2	"	"	"	"	"	"	"
		187	"									"									"	"	A3	"	"	"	"	"	"	"
		188	"									"									"	"	A4	"	"	"	"	"	"	"
		189	"									"									"	"	A5	"	"	"	"	"	"	"
		190	"									"									"	"	A6	"	"	"	"	"	"	"
		191	"									"									"	"	A7	"	"	"	"	"	"	"
		192	"									"									"	"	A8	"	"	"	"	"	"	"
		193	4.5 V	IN								"									"	"	B1	"	"	"	"	"	"	"
		194	"		IN							"									"	"	B2	"	"	"	"	"	"	"
		195	"			IN						"									"	"	B3	"	"	"	"	"	"	"
		196	"				IN					"									"	"	B4	"	"	"	"	"	"	"
		197	"					IN				"									"	"	B5	"	"	"	"	"	"	"
		198	"						IN			"									"	"	B6	"	"	"	"	"	"	"
		199	"							IN		"									"	"	B7	"	"	"	"	"	"	"
		200	"								IN	"	OUT	OUT	OUT	OUT	OUT	OUT	OUT	OUT	"	"	B8	"	"	"	"	"	"	"
t_{TLH}	3004 (Fig. 4)	201 to 216	Same tests, terminal conditions, and limits as specified above for t_{THL}.																						"	"	"	"	"	"	"
t_{PHL2}	3003 (Fig. 4)	217	4.5 V	IN	IN	IN	IN	IN	IN	IN	IN	GND	OUT	OUT	OUT	OUT	OUT	OUT	OUT	OUT	GND	4.5 V	A1 to B1	4	23	4	33	4	23	ns
		218	"									"									"	"	A2 to B2	"	"	"	"	"	"	"
		219	"									"									"	"	A3 to B3	"	"	"	"	"	"	"
		220	"									"									"	"	A4 to B4	"	"	"	"	"	"	"
		221	"									"									"	"	A5 to B5	"	"	"	"	"	"	"
		222	"									"									"	"	A6 to B6	"	"	"	"	"	"	"
		223	"									"									"	"	A7 to B7	"	"	"	"	"	"	"
		224	"									"									"	"	A8 to B8	"	"	"	"	"	"	"
		225	GND	OUT	OUT	OUT	OUT	OUT	OUT	OUT	OUT	"	OUT	OUT	OUT	OUT	OUT	OUT	OUT	IN	"	"	B1 to A1	"	"	"	"	"	"	"
		226	"									"									"	"	B2 to A2	"	"	"	"	"	"	"
		227	"									"									"	"	B3 to A3	"	"	"	"	"	"	"
		228	"									"									"	"	B4 to A4	"	"	"	"	"	"	"
		229	"									"									"	"	B5 to A5	"	"	"	"	"	"	"
		230	"									"									"	"	B6 to A6	"	"	"	"	"	"	"
		231	"									"									"	"	B7 to A7	"	"	"	"	"	"	"
		232	"									"	IN	IN	IN	IN	IN	IN	IN	IN	"	"	B8 to A8	"	"	"	"	"	"	"
t_{PLH2}	3003 (Fig. 4)	223 to 248	Same terminal conditions and measured terminals as specified above for t_{PHL2}.																						"	"	"	"	"	"	"

See footnotes at end of table.

TABLE III. Group A inspection for device type 53 - Continued.

Symbol	MIL-STD-883 method	Cases 2, R	Terminal conditions 1/																				Measured terminal	Test limits						Unit
			1	2	3	4	5	6	7	8	9	10	11	12	13	14	15	16	17	18	19	20		Subgroup 9 T_C = +25°C 4/		Subgroup 10 T_C = +125°C		Subgroup 11 T_C = -55°C 4/		
		Test no.	DIR	A1	A2	A3	A4	A5	A6	A7	A8	GND	B8	B7	B6	B5	B4	B3	B2	B1	G	V_{CC}		Min	Max	Min	Max	Min	Max	
t_{PZH1} 10/	3003 (Fig. 4)	249	GND	OUT								GND								4.5 V	IN	4.5 V	G to A1	6	41	6	54	6	41	ns
		250	"		OUT							"							4.5 V		"	"	G to A2	"	"	"	"	"	"	"
		251	"			OUT						"						4.5 V			"	"	G to A3	"	"	"	"	"	"	"
		252	"				OUT					"					4.5 V				"	"	G to A4	"	"	"	"	"	"	"
		253	"					OUT				"				4.5 V					"	"	G to A5	"	"	"	"	"	"	"
		254	"						OUT			"			4.5 V						"	"	G to A6	"	"	"	"	"	"	"
		255	"							OUT		"		4.5 V							"	"	G to A7	"	"	"	"	"	"	"
		256	"								OUT	"	4.5 V								"	"	G to A8	"	"	"	"	"	"	"
		257	4.5 V	4.5 V								"								OUT	"	"	G to B1	"	"	"	"	"	"	"
		258	"		4.5 V							"							OUT		"	"	G to B2	"	"	"	"	"	"	"
		259	"			4.5 V						"						OUT			"	"	G to B3	"	"	"	"	"	"	"
		260	"				4.5 V					"					OUT				"	"	G to B4	"	"	"	"	"	"	"
		261	"					4.5 V				"				OUT					"	"	G to B5	"	"	"	"	"	"	"
		262	"						4.5 V			"			OUT						"	"	G to B6	"	"	"	"	"	"	"
		263	"							4.5 V		"		OUT							"	"	G to B7	"	"	"	"	"	"	"
		264	"								4.5 V	"	OUT								"	"	G to B8	"	"	"	"	"	"	"
t_{PHZ1} 10/	3003 (Fig. 4)	265 to 280	Same terminal conditions and measured terminals as specified above for t_{PZH1}.																					"	"	"	"	"	"	"
t_{PZL1} 9/	3003 (Fig. 4)	281	GND	OUT								GND								GND	IN	4.5 V	G to A1	"	"	"	"	"	"	"
		282	"		OUT							"							GND		"	"	G to A2	"	"	"	"	"	"	"
		283	"			OUT						"						GND			"	"	G to A3	"	"	"	"	"	"	"
		284	"				OUT					"					GND				"	"	G to A4	"	"	"	"	"	"	"
		285	"					OUT				"				GND					"	"	G to A5	"	"	"	"	"	"	"
		286	"						OUT			"			GND						"	"	G to A6	"	"	"	"	"	"	"
		287	"							OUT		"		GND							"	"	G to A7	"	"	"	"	"	"	"
		288	"								OUT	"	GND								"	"	G to A8	"	"	"	"	"	"	"
		289	6 V	GND								"								OUT	"	"	G to B1	"	"	"	"	"	"	"
		290	"		GND							"							OUT		"	"	G to B2	"	"	"	"	"	"	"
		291	"			GND						"						OUT			"	"	G to B3	"	"	"	"	"	"	"
		292	"				GND					"					OUT				"	"	G to B4	"	"	"	"	"	"	"
		293	"					GND				"				OUT					"	"	G to B5	"	"	"	"	"	"	"
		294	"						GND			"			OUT						"	"	G to B6	"	"	"	"	"	"	"
		295	"							GND		"		OUT							"	"	G to B7	"	"	"	"	"	"	"
		296	"								GND	"	OUT								"	"	G to B8	"	"	"	"	"	"	"
t_{PLZ1} 9/	3003 (Fig. 4)	297 to 312	Same terminal conditions and measured terminals as specified above for t_{PZL1}.																					"	"	"	"	"	"	"

1/ Pins not designated may be "High" level logic, "Low" level logic, or open. Exceptions are as follows:

a. V_{IC}(pos) tests, the GND terminal shall be open. A minimum limit of 0.4 V applies to tests being performed on equipment not capable of opening the GND pin during testing.

b. V_{IC}(neg) tests, the V_{CC} terminal shall be open.

c. ICC tests, the output terminal shall be open.

2/ Three-state output conditions are required. For I_{OZL}, set output to high state. For I_{OZH}, set output to low state. Set input pins to $V_{IL} = V_{IL}$(max) or to $V_{IH} = V_{IH}$(min), as required.

3/ See 4.4.1c.

4/ See 4.4.1d.

5/ Tests shall be performed in sequence, attributes data only.

6/ H > 1.5 V; L < 1.5 V; A = 0.7 V; B = 0.4 V; for the 53 device type A = 2.4 V; B = 0.4 V.

7/ Three-state output conditions are required.

8/ f_{MAX}, minimum limit specified is the frequency of the input pulse. The output frequency shall be one-half of the input frequency.

9/ Add 1kΩ minimum resistor between VCC and output to pull output to high state.

10/ Add 1kΩ minimum resistor between GND and output to pull output to low state.

4.4.4 Group D inspection. Group D inspection shall be in accordance with table IV of method 5005 of MIL-STD-883. End-point electrical parameters shall be as specified in table II herein.

4.4.5 Group E inspection. Group E inspection is required only for device types intended to be marked as radiation hardened (see 3.6.1). When group E testing is performed it shall be in accordance with table V of method 5005 of MIL-STD-883 and 4.5.4 herein.

4.5 Methods of inspection. Methods of inspection shall be specified as follows:

4.5.1 Voltage and current. Unless otherwise specified, all voltages given are referenced to the microcircuit GND terminal. Currents given are conventional and positive when flowing into the referenced terminal.

4.5.2 Burn-in and life test cool down procedures. When the burn-in and life tests are completed and prior to removal of bias voltages, the devices under test (DUT) shall be cooled to within 10°C of their power stable condition at room temperature; then, electrical parameter end-point measurements shall be performed.

TABLE IV. Delta limits at 25°C.

Parameter 1/	Device types	
	All	
I_{CC}		±30 nA

1/ The above parameters shall be recorded before and after the required burn-in and life tests to determine deltas (Δ).

4.5.3 Quiescent supply current (I_{CC} test). When performing quiescent supply current measurements (I_{CC}), the meter shall be placed so that all currents flow through the meter.

4.5.4 Radiation hardness assurance (RHA) testing. The RHA testing shall be performed in accordance with test procedures and sampling specified in table V of method 5005 of MIL-STD-883 and herein:

a. Before irradiation, selected samples shall be assembled in qualified packages and pass the governing electrical parameters (group A subgroup 1 at 25°C) and also be subjected to the threshold-voltage test in table V in order to calculate the delta threshold (ΔV_T) after irradiation.

b. The devices shall be subjected to a total radiation dose as specified in MIL-M-38510 for the radiation hardness assurance (RHA) level being tested, and meet the end point electrical parameters as defined in table VI at 25°C, after exposure. The start and completion of the end point electrical parameter measurements shall not exceed 2 hours following irradiation.

c. Threshold-voltage test circuit conditions shall be as specified in table V and figure 5. In situ and remote testing, the tests shall be performed with the devices biased in accordance with table VII and bias may be interrupted for up to 1 minute to remove devices to the remote bias fixture.

d. After irradiation, the devices shall pass the truth table test as specified in subgroup 7 in table III or if subgroup 7 is not required, then an equivalent truth table test shall be performed.

TABLE V. Threshold-voltage test circuit conditions.

Device type	GND	5 V	V_{TN} measured at -20 μA supply	GND	-5.0 V	V_{TP} measured at 20 μA supply
01	1	14	3,4,5,6,7,13	1	7,8,9,10,11	13, 14
02	1	14	3,4,5,6,7,13	1	7,8,9,10,11	13, 14
03, 53	1	20	10-19	1	2-10,19	20
04						
05						
06	1	20	10-19	1	2-10,19	20
07	1	20	10-19	1	2-10,19	20
08	3	24	1,2, 12-23	3	1,2 4-12, 21-23	24
09	3	24	1,2, 12-23	3	1,2 4-12, 21-23	24

TABLE VI. Radiation hardening end-point electrical parameters at +25°C.

Parameter	All device types	V_{CC} Device types 01-09	V_{CC} Device types 53
V_{TN}	-0.3 V min	5 V	5 V
V_{TP}	2.8 V max	5 V	5 V
ΔV_T	1.0 V max	5 V	5 V
I_{CC}	100 x max limit	6 V	5.5 V
t_{PLH}	1.35 x max limit	4.5 V	4.5 V
t_{PHL}	1.35 x max limit	4.5 V	4.5 V

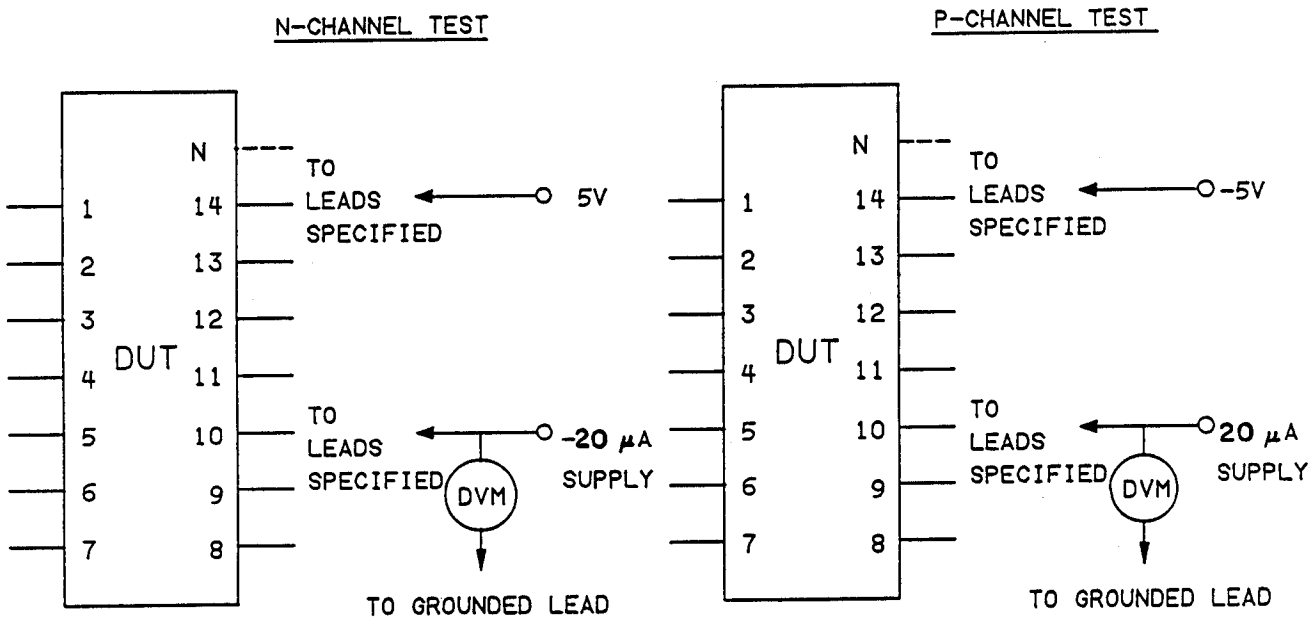

FIGURE 5. Threshold - voltage test circuit.

TABLE VII. Bias during exposure to radiation.

Device type	Pin connections		
	V_{CC} = 4.5 V dc (through a 30- to 60-kilohm resistor)	GND	V_{CC} = 4.5 V dc
01	1, 8-11, 13	7	14
02	1, 8-11, 13	7	14
03, 53	11-18	1,10,19	20
04			
05			
06	11-18	1,10,19	20
07	11-18	1,10,19	20
08	1, 13-20, 23	2,3,12, 22,23	24
09	1, 13-20, 23	2,3,12, 22,23	24

Pins not designated are open or connected to 4.5 V dc through a 30- to 60-kilohm resistor.

4.6 Data reporting. When specified in the purchase order or contract, a copy of the following data, as applicable, shall be supplied.

a. Attributes data for all screening tests (see 4.2) and variables data for all static burn-in, dynamic burn-in, and steady-state life tests (see 3.5).

b. A copy of each radiograph.

c. The quality conformance inspection data (see 4.4).

d. Parameter distribution data on parameters evaluated during burn-in (see 3.5).

e. Final electrical parameters data (see 4.2c).

5. PACKAGING

5.1 Packaging requirements. The requirements for packaging shall be in accordance with MIL-M-38510.

6. NOTES

6.1 Intended use. Microcircuits conforming to this specification are intended for original equipment design application and logistic support of existing equipment.

6.2 Ordering data. The acquisition document should specify the following:

a. Complete part number (see 1.2).

b. Requirements for delivery of one copy of the quality conformance inspection data pertinent to the device inspection lot to be supplied with each shipment by the device manufacturer, if applicable.

c. Requirements for certificate of compliance, if applicable.

d. Requirements for notification of change of product or process to the contracting activity in addition to notification to the qualifying activity, if applicable.

e. Requirements for failure analysis (including required test condition of method 5003 of MIL-STD-883), corrective action and reporting of results, if applicable.

f. Requirements for product assurance options.

g. Requirements for special carriers, lead lengths, or lead forming, if applicable. These requirements shall not affect the part number. Unless otherwise specified, these requirements shall not apply to direct purchase by, or direct shipment to the Government.

h. Requirements for "JAN" marking.

6.3 Abbreviations, symbols, and definitions. The abbreviations, symbols, and definitions used herein are defined in MIL-M-38510, MIL-STD-1331, and as follows:

GND - - - - - - - - - - - - - -	Ground zero voltage potential.
V_{IN} - - - - - - - - - - - - - -	Voltage level at an input terminal.
V_{IN} - - - - - - - - - - - - - -	Current flowing into an input terminal.
t_{PHZ} - - - - - - - - - - - - - -	Output disable time (of a three-state output) from high-level. The time between the specified reference points on the input and output voltage waveforms with the three-state output changing from the defined high-level to a high-impedance (off) state.
t_{PLZ} - - - - - - - - - - - - - -	Output disable time (of a three-state output) from low-level. The time between the specified reference points on the input and output voltage waveforms with the three-state output changing from the defined low-level to a high-impedance (off) state.
t_{PZH} - - - - - - - - - - - - - -	Output enable time (of a three-state output) to high-level. The time between the specified reference points on the input and output voltage waveforms with the three-state output changing from a high-impedance (off) state to the defined high-level.
t_{PZL} - - - - - - - - - - - - - -	Output enable time (of a three-state output) to low-level. The time between the specified reference points on the input and output voltage waveforms with the three-state output changing from a high-impedance (off) state to the defined low-level.

6.4 Logistic support. Lead materials and finishes (see 3.3) are interchangeable. Unless otherwise specified, microcircuits acquired for Government logistic support will be acquired to device class S for National Aeronautics and Space Administration or class B for Department of Defense (see 1.2.2), lead finish C (see 3.3). Longer length leads and lead forming shall not affect the part number.

6.5 Substitutability. The cross-reference information below is presented for the convenience of users. Microcircuits covered by this specification will functionally replace the listed generic-industry type. Generic-industry microcircuit types may not have equivalent operational performance characteristics across military temperature ranges or reliability factors equivalent to MIL-M-38510 device types and may have slight physical variations in relation to case size. The presence of this information shall not be deemed as permitting substitution of generic-industry types for MIL-M-38510 types or as a waiver of any of the provisions of MIL-M-38510.

Military device type	Generic-industry type
01	54HC242
02	54HC243
03	54HC245
04 1/	54HC620
05 1/	54HC623
06	54HC640
07	54HC643
08	54HC646
09	54HC648
53	54HCT245

1/ These device types to be included in a later revision of this specification.

6.6 Handling. MOS devices must be handled with certain precautions to avoid damage due to accumulation of static charge. Input protective devices have been designed in the chip to minimize the effect of this static build up. However, the following handling practices are recommended:

a. Devices should be handled on benches with conductive and grounded surface.

b. Ground test equipment and tools.

c. Do not handle devices by the leads.

d. Store devices in conductive foam or carriers.

e. Avoid use of plastic, rubber, or silk in MOS areas.

f. Maintain relative humidity above 50 percent, if practical.

Custodians:
Army - ER
Navy - EC
Air Force - 17
NASA - NA

Review activities:
Army - AR, MI
Air Force - 11, 19, 85, 99
DLA - ES

User activities:
Army - SM
Navy - AS, CG, OC, MC, SH

Preparing activity:
Air Force - 17

Agent:
DLA - ES

(Project 5962-0850)