MILITARY SPECIFICATION

MICROCIRCUITS, DIGITAL, HIGH SPEED, CMOS, BUFFER GATES, MONOLITHIC SILICON

This specification is approved for use by all Departments and Agencies of the Department of Defense.

1. SCOPE

1.1 Scope. This specification covers the detail requirements for monolithic silicon, high speed, CMOS logic microcircuits without/with TTL input voltage level compatibility. Two product assurance classes and a choice of case outlines and lead finishes are provided and are reflected in the complete part number.

1.2 Part number. The part number shall be in accordance with MIL-M-38510, and as specified herein.

1.2.1 Device type. The device type shall be as follows:

Device type	Circuit
01/51	Hex inverter
02/52	Hex inverter schmitt trigger
03/53	Inverting octal three-state buffer
04/54	Octal three-state buffer
05/55	Octal three-state buffer
06	Hex bus driver, gated enable inputs for X-Y coincident bus control (three-state)
07	Hex inverter bus driver, gated enable inputs for X-Y coincident bus control (three-state)
08	Hex bus driver, 4-line and 2-line enable inputs (three-state)
09	Hex inverter bus driver, 4-line and 2-line enable inputs (three-state)
10/60	Octal inverter bus driver (three-state)
11/61	Octal non-inverting bus driver (three-state)

1.2.2 Device class. The device class shall be the product assurance level as defined in MIL-M-38510.

1.2.3 Case outlines. The case outlines shall be designated as follows:

Outline letter	Case outline (see MIL-M-38510, appendix C)
C	D-1 (14-lead, 1/4" x 3/4"), dual-in-line package
E	D-2 (16-lead, 1/4" x 7/8"), dual-in-line package
R	D-8 (20-lead, 1/4" x 1 1/16"), dual-in-line package
D	F-2 (14-lead, 1/4" x 3/8"), flat package
F	F-5 (16-lead, 1/4" x 3/8"), flat package
S	F-9 (20-lead, 1/4" x 1/2"), flat package
2	C-2 (20-terminal, .350" x .350"), square chip carrier package

Beneficial comments (recommendations, additions, deletions) and any pertinent data which may be of use in improving this document should be addressed to: Rome Air Development Center (RBE-2), Griffiss AFB, NY 13441, by using the self-addressed Standardization Document Improvement Proposal (DD Form 1426) appearing at the end of this document or by letter.

AMSC N/A FSC 5962

DISTRIBUTION STATEMENT A. Approved for public release; distribution is unlimited.

1.3 Absolute maximum ratings.

Supply voltage (V_{CC}) - - - - - - - - - - - - - - -	-0.5 V dc +7.0 V dc
DC input voltage (V_{IN}) - - - - - - - - - - - - - -	-0.5 V dc to V_{CC} +0.5 V dc
DC output voltage (V_{OUT}) - - - - - - - - - - - - -	-0.5 V dc to V_{CC} +0.5 V dc
Clamp diode current (I_{IK}, I_{OK}) - - - - - - - - - -	±20 mA
DC output current per pin (I_{OUT}) 01/51, 02/52- -	±25 mA
(03, 04, 05, 06, 07, 08, 09, 10, 11) - - - - -	±35 mA
DC V_{CC} or GND current per pin (I_{OC}) 01/51, 02/52	±50 mA
(53, 54, 55, 60, 61) - - - - - - - - - - - - - - -	±70 mA
Storage temperature range (T_{STG}) - - - - - - - - -	-65°C to +150°C
Maximum power dissipation (P_D) - - - - - - - - - -	300 mW
Lead temperature (soldering, 10 seconds) - - - -	+300°C
Thermal resistance, junction-to-case (θ_{JC}):	
All except C-2 -	See MIL-M-38510, appendix C
C-2- -	60°C/W
Junction temperature (T_J)- - - - - - - - - - - - - -	+175°C

1.4 Recommended operating conditions.

Device types 01, 03 through 11:

Input low (V_{IL}) maximum voltage- - - - - - - -	0.3 V at V_{CC} = 2 V
	0.9 V at V_{CC} = 4.5 V
	1.2 V at V_{CC} = 6 V
Input high (V_{IH}) minimum voltage - - - - - - - -	1.5 V at V_{CC} = 2 V
	3.15 V at V_{CC} = 4.5 V
	4.2 V at V_{CC} = 6 V

Device type 02:

Input low (V_{IL}) maximum voltage- - - - - - - -	1.0 V at V_{CC} = 2 V
	2.45 V at V_{CC} = 4.5 V
	3.2 V at V_{CC} = 6 V
Input high (V_{IH}) minimum voltage - - - - - - - -	0.7 V at V_{CC} = 2 V
	1.55 V at V_{CC} = 4.5 V
	2.1 V at V_{CC} = 6 V

Device types 51, 53, 54, 55, 60, 61:

Input low (V_{IL}) maximum voltage- - - - - - - -	0.8 V at V_{CC} = 4.5-5.5 V
Input high (V_{IH}) minimum voltage - - - - - - - -	2.0 V at V_{CC} = 4.5-5.5 V

Device type 52:

Input low (V_{IL}) maximum voltage- - - - - - - -	0.6 V at V_{CC} = 5.5 V
Input high (V_{IH}) minimum voltage - - - - - - - -	1.9 V at V_{CC} = 4.5 V

Device types 01 through 11:

Supply voltage (V_{CC}) - - - - - - - - - - - - - - -	2 V dc to 6 V dc
Output voltage - - - - - - - - - - - - - - - - - - -	0 V dc to V_{CC}
Operating temperature- - - - - - - - - - - - - - - -	-55°C to +125°C

Input rise and fall times (t_r, t_f) maximum:	Except 02
V_{CC} = 2 V	1000 ns
V_{CC} = 4.5 V	500 ns
V_{CC} = 6 V	400 ns

Device types 51, 52, 53, 54, 55, 60, 61:

Supply voltage (V_{CC}) - - - - - - - - - - - - - -	4.5 V dc to 5.5 V dc
Output voltage - - - - - - - - - - - - - - - - - -	0 V dc to V_{CC}
Operating temperature- - - - - - - - - - - - - - -	-55°C to +125°C

Input rise and fall times (t_r, t_f) maximum:	Except 52
V_{CC} = 4.5 V - 5.5 V	500 ns

2. APPLICABLE DOCUMENTS

2.1 Government documents.

2.1.1 Specification and standard. The following specification and standard form a part of this specification to the extent specified herein. Unless otherwise specified, the issues of these documents shall be those listed in the issue of the Department of Defense Index of Specifications and Standards (DODISS) and supplement thereto, cited in the solicitation.

SPECIFICATION

MILITARY

MIL-M-38510 - Microcircuits, General Specification for.

STANDARD

MILITARY

MIL-STD-883 - Test Methods and Procedures for Microelectronics.

(Copies of the specification and standard required by manufacturers in connection with specific acquisition functions should be obtained from the contracting activity or as directed by the contracting activity.)

2.2 Order of precedence. In the event of a conflict between the text of this specification and the references cited herein (except for associated detail specifications, specification sheets or MS standards), the text of this specification shall take precedence. Nothing in this specification, however, shall supersede applicable laws and regulations unless a specific exemption has been obtained.

3. REQUIREMENTS

3.1 Detail specification. The individual item requirements shall be in accordance with MIL-M-38510, and as specified herein.

3.2 *Design, construction, and physical dimensions.* The design, construction, and physical dimensions shall be as specified in MIL-M-38510 and herein.

3.2.1 Logic diagrams and terminal connections. The logic diagrams and terminal connections shall be as specified on figure 1.

3.2.2 Truth tables. The truth tables shall be as specified on figure 2.

3.2.3 Schematic circuits. The schematic circuits shall be submitted to the preparing activity prior to inclusion of a manufacturer's device in the specification and shall be submitted to the qualifying activity and agent activity (DESC-ECS) as a prerequisite for qualification. All qualified manufacturers' schematics shall be maintained by the agent activity and will be available upon request.

3.2.4 Case outlines. The case outlines shall be as specified in 1.2.3.

3.3 Lead material and finish. The lead material and finish shall be in accordance with MIL-M-38510 and 6.4 herein.

3.4 Electrical performance characteristics. Unless otherwise specified, the electrical performance characteristics are as specified in table I, and apply over the full recommended case operating temperature range.

3.5 Electrical test requirements. The electrical test requirements for each device class shall be the subgroups specified in table II. The electrical tests for each subgroup are described in table III.

3.6 Marking. Marking shall be in accordance with MIL-M-38510. At the option of the manufacturer, marking of the country of origin may be omitted from the body of the microcircuit, but shall be retained on the initial container.

3.6.1. Total dose radiation hardness identifier. Total dose radiation hardness identifier shall be in accordance with MIL-M-38510 and 4.5.4 herein.

3.6.2 Serialization. All class S devices shall be serialized in accordance with MIL-M-38510.

3.6.3 Correctness of indexing and marking. All devices shall be subjected to the final electrical tests specified in table II after part number marking to verify that they are correctly indexed and identified by part number. Optionally, an approved electrical test may be devised especially for this requirement.

3.7 Microcircuit group assignment. The devices covered by this specification shall be in microcircuit group number 37 (see MIL-M-38510, appendix E).

4. QUALITY ASSURANCE PROVISIONS

4.1 Sampling and inspection. Sampling and inspection procedures shall be in accordance with MIL-M-38510 and methods 5005 and 5007, as applicable, of MIL-STD-883, except as modified herein.

4.2 Screening. Screening shall be in accordance with method 5004 of MIL-STD-883, and shall be conducted on all devices prior to qualification and quality conformance inspection. The following additional criteria shall apply:

a. Delete the sequence specified in 3.1.10 through 3.1.14 of method 5004 and substitute lines 1 through 7 of table II herein.

b. Burn-in (method 1015 of MIL-STD-883).

(1) Static tests (test condition A) using circuit shown on figure 3, or equivalent. Ambient temperature (T_A) shall be +125°C minimum. Test duration for each static test shall be 24 hours minimum for class S devices and in accordance with table I of method 1015 for class B devices.

(2) Dynamic test (test condition D) using circuit shown on figure 3, or equivalent. Ambient temperature shall be +125°C minimum. Test duration shall be in accordance with table I of method 1015.

c. Interim and final electrical parameters shall be as specified in table II herein.

d. For class S devices, post dynamic burn-in, or class B devices, post static burn-in, electrical parameter measurements may, at the manufacturer's option, be performed separately or included in the final electrical parameter requirements.

TABLE I. Electrical performance characteristics.

Test	Symbol	Conditions 1/ $-55^{\circ}C \leq T_C \leq +125^{\circ}C$ unless otherwise specified	2/ Device type	V_{CC}	Limits Min	Limits Max	Unit
High-level output voltage	V_{OH1} 3/	V_{IH} = 1.5 V; V_{IL} = 0.3 V; I_{OH} = -20 µA	01-11	2.0 V	1.95	---	V
	V_{OH2} 3/	V_{IH} = 3.15 V; V_{IL} = 0.9 V; I_{OH} = -20 µA	01-11	4.5 V	4.45	---	V
	V_{OH3}	V_{IH} = 4.2 V; V_{IL} = 1.2 V; I_{OH} = -20 µA	01-11	6.0 V	5.95	---	V
	V_{OH4} 3/	V_{IH} = 3.15 V; V_{IL} = 0.9 V	01-11	4.5 V	3.7	---	V
		I_{OH} = -6.0 mA	03-11				
		I_{OH} = -4.0 mA	01,02				
	V_{OH5}	V_{IH} = 4.2 V; V_{IL} = 1.2 V	01-11	6.0 V	5.2	---	V
		I_{OH} = -7.8 mA	03-11				
		I_{OH} = -5.2 mA	01,02				
Low-level output voltage	V_{OL1} 3/	V_{IH} = 1.5 V; V_{IL} = 0.3 V; I_{OL} = 20 µA	01-11	2.0 V	---	0.05	V
	V_{OL2} 3/	V_{IH} = 3.15 V; V_{IL} = 0.9 V; I_{OL} = 20 µA	01-11	4.5 V	---	0.05	V
	V_{OL3}	V_{IH} = 4.2 V; V_{IL} = 1.2 V; I_{OL} = 20 µA	01-11	6.0 V	---	0.05	V
	V_{OL4} 3/	V_{IH} = 3.15 V; V_{IL} = 0.9 V	01-11	4.5 V	---	0.4	V
		I_{OL} = 6.0 mA	03-11				
		I_{OL} = 4.0 mA	01,02				
	V_{OL5}	V_{IH} = 4.2 V; V_{IL} = 1.2 V	01-11	6.0 V	---	0.4	V
		I_{OL} = 7.8 mA	03-11				
		I_{OL} = 5.2 mA	01,02				

See footnotes at end of table.

TABLE I. Electrical performance characteristics - Continued.

Test	Symbol	Conditions 1/ $-55^{\circ}C \leq T_C \leq +125^{\circ}C$ unless otherwise specified	Device type 2/	V_{CC}	Limits Min	Limits Max	Unit
Positive going threshold voltage	V_{T+}		02	2.0 V 3/	0.7	1.5	V
				4.5 V 3/	1.55	3.15	V
				6.0 V	2.10	4.2	V
Negative going threshold voltage	V_{T-}		02	2.0 V 3/	0.3	1.0	V
				4.5 V 3/	0.9	2.45	V
				6.0 V	1.2	3.2	V
Hystersis voltage	V_H		02	2.0 V 3/	0.2	1.2	V
				4.5 V 3/	0.4	2.1	V
				6.0 V	0.5	2.5	V
Positive input clamp voltage	V_{IC+}	V_{CC} = GND I_{IN} = 1 mA T_C = +25°C	01-11	---	1/	1.5	V
Negative input clamp voltage	V_{IC-}	V_{CC} = Open I_{IN} = -1 mA T_C = +25°C	01-11	---	1/	-1.5	V

See footnotes at the end of table.

TABLE I. Electrical performance characteristics - Continued.

Test	Symbol	Conditions 1/ $-55^{\circ}C \leq T_C \leq +125^{\circ}C$ unless otherwise specified	2/ Device type	V_{CC}	Limits Min	Limits Max	Unit
Positive going threshold voltage	V_{T+1}		52	4.5 V	1.2	1.9	V
	V_{T+2}		52	5.5 V	1.4	2.1	V
High-level output voltage	V_{OH6}	V_{IH} = 2.0 V; V_{IL} = 0.8 V; I_{OH} = -20 µA	51,53-55,60,61	4.5 V	4.40	---	V
Negative going threshold voltage	V_{T-1}		52	4.5 V	0.5	1.2	V
	V_{T-2}		52	5.5 V	0.6	1.4	V
High-level output voltage	V_{OH7}	V_{IH} = 2.0 V; V_{IL} = 0.8 V	51,53-55,60,61	5.5 V	3.7	---	V
		I_{OH} = -6.0 mA	53-55,60,61				
		I_{OH} = -4.0 mA	51				
	V_{OH8}	V_{IH} = 1.9 V; V_{IL} = 0.5 V; I_{OH} = -20 µA	52	4.5 V	4.40	---	V
	V_{OH9}	V_{IH} = 2.1 V; V_{IL} = 0.6 V	52	5.5 V	3.7	---	V
		I_{OH} = -4.0 mA	52				
Hysteresis voltage	V_{H1}		52	4.5 V	0.4	1.4	V
	V_{H2}		52	5.5 V	0.4	1.5	V
Low-level output voltage	V_{OL6}	V_{IH} = 2.0 V; V_{IL} = 0.8 V; I_{OL} = 20 µA	51,53-55,60,61	4.5 V	---	0.1	V
	V_{OL7}	V_{IH} = 2.0 V; V_{IL} = 0.8 V; I_{OL} = 4.0 mA	51	5.5 V	---	0.4	V
		V_{IH} = 2.0 V; V_{IL} = 0.8 V; I_{OL} = 6.0 mA	53-55,60,61				

See footnotes at end of table.

TABLE I. Electrical performance characteristics - Continued.

Test	Symbol	Conditions 1/ $-55^{\circ}C \leq T_C \leq +125^{\circ}C$ unless otherwise specified	Device type 2/	V_{CC}	Limits Min	Limits Max	Unit
Low-level output voltage	V_{OL8}	V_{IH} = 1.9 V; V_{IL} = 0.5 V; I_{OL} = 20 µA	52	4.5 V	---	0.1	V
	V_{OL9}	V_{IH} = 2.1 V; V_{IL} = 0.6 V; I_{OL} = 4.0 mA	52	5.5 V	---	0.4	V
Positive input clamp voltage	V_{IC+}	V_{CC} = GND; I_{IN} = 1 mA; T_C = +25°C	51-55 60,61	--- 1/	---	1.5	V
Negative input clamp voltage	V_{IC-}	V_{CC} = Open; I_{IN} = -1 mA; T_C = +25°C	51-55 60,61	--- 1/	---	-1.5	V
Input current low	I_{IL}	V_{IN} = GND	01-11	6.0 V	---	-0.1	µA
Input current high	I_{IH}	V_{IN} = V_{CC}	01-11	6.0 V	---	0.1	µA
Short circuit output current	I_{OS1} 3/	V_O = GND; V_I = GND, or V_{CC}	01,02	2.0 V	-2	-50	mA
			03-11		-2	-60	
	I_{OS2} 3/		01,02	4.5 V	-15	-150	
			03-11		-15	-165	
	I_{OS3} 3/		01,02	6.0 V	-25	-180	
			03-11		-25	-210	
	I_{OS4}		01,02	4.0 V	-10	-120	
			03-11		-10	-135	
Supply current quiescent	I_{CC}	V_I = 6.0 V	01,02	6.0 V	---	10	µA
	I_{CC}	V_I = GND	03-11		---	20	µA
Three-state current quiescent	I_{CCZ}	V_I = 6.0 V, or GND	03-11	6.0 V	---	10	µA
Three--state output leakage current low	I_{OZL}	V_{OUT} = GND OC = V_{IH} or V_{IL} 4/	03-11	6.0 V	---	-2.0	µA
Three--state output leakage current high	I_{OZH}	V_{OUT} = V_{CC} OC = V_{IH} or V_{IL} 4/	03-11	6.0 V	---	+2.0	µA

See footnotes at end of table.

TABLE I. Electrical performance characteristics - Continued.

Test	Symbol	Conditions 1/ $-55^{\circ}C \leq T_C \leq +125^{\circ}C$ unless otherwise specified	Device type 2/	V_{CC}	Limits Min	Limits Max	Unit
Input current low	I_{IL}	V_{IN} = GND	51-55, 60,61	5.5 V	---	-0.1	µA
Input current high	I_{IH}	$V_{IN} = V_{CC}$	51-55, 60,61	5.5 V	---	0.1	µA
Short circuit output current	I_{OS2} 3/	V_O = GND; V_I = GND, or V_{CC}	51 52	4.5 V	-15	-150	mA
			53-55, 60,61	4.5 V	-15	-155	
	I_{OS5} 3/		51,52	5.5 V	-25	-180	
			53-55, 60,61		-25	-210	
	I_{OS4}		51,52	4.0 V	-10	-120	
			53-55,		-10	-135	
Supply current quiescent	I_{CC}	V_I = 5.5 V	51,52	5.5 V	---	10	µA
	I_{CC}	V_I = GND	53-55, 60,61		---	20	µA
Additional supply current quiescent per input pin (one unit load)	$I_{CC\Delta}$ 7/	V_{IL} = 0.8 V, V_{IH} = 2.4 V Test pin at V_{IN} = 2.4 V Other pins at 0.8 V or 5.5 V I_O = 0 V	51-55 60,61	5.5 V	---	1.5	mA
Three-state current quiescent	I_{CCZ}	V_I = 5.5 V	53-55, 60,61	5.5 V	---	10	µA
Three-state output leakage current low	I_{OZL}	V_{OUT} = GND OC = 4/	53-55, 60,61	5.5 V	---	-2.0	µA
Three-state output leakage current high	I_{OZH}	$V_{OUT} = V_{CC}$ OC = 4/	53-55, 60,61	5.5 V	---	+2.0	µA
Input capacitance	C_{IN}	T_C = +25°C	All	---	---	10	pF
Three-state output capacitance	C_O	T_C = +25°C	03-11, 53-55, 60,61	---	---	20	pF

See footnotes at end of table.

TABLE I. Electrical performance characteristics - Continued.

Test	Symbol	Conditions 1/ $-55^{\circ}C \leq T_C \leq +125^{\circ}C$ unless otherwise specified	Device type 2/	V_{CC}	Limits Min	Limits Max	Unit
Power dissipation capacitance	C_{PD} 2/ 3/	T_C = +25°C	01	---	---	21	pF
			02		---	27	
			03-05, 10,11		---	50	
			06-09, 53-55		---	45	
			51		---	24	
			52		---	20	
			60,61		---	55	
Propagation delay 5/, 6/	t_{PHL} t_{PLH}	C_L = 50 pF ±10%	01	4.5 V	4	22	ns
			02	4.5 V	8	33	ns
			03	4.5 V	5	23	ns
			04	4.5 V	5	27	ns
			05	4.5 V	5	27	ns
			06	4.5 V	5	28	ns
			08	4.5 V	5	28	ns
			07	4.5 V	5	29	ns
			09	4.5 V	5	29	ns
			10	4.5 V	8	29	ns
			11	4.5 V	8	29	ns
			51	4.5 V	4	23	ns
			52	4.5 V	10	44	ns
			53	4.5 V	8	29	ns
			54	4.5 V	8	30	ns
			55	4.5 V	8	33	ns
			60	4.5 V	10	35	ns

See footnotes at end of table.

TABLE I. Electrical performance characteristics - Continued.

Test	Symbol	Conditions 1/ $-55^{\circ}C \leq T_C \leq +125^{\circ}C$ unless otherwise specified	Device type 2/	V_{CC}	Limits Min	Limits Max	Unit
Propagation delay 5/, 6/	t_{PHL} t_{PLH}	C_L = 50 pF ±10%	61	4.5 V	10	35	ns
Output enable time 5/, 6/	t_{PZH} t_{PZL}	C_L = 50 pF ±10% R_L = 1k ±10%	03,04, 05	4.5 V	5	35	ns
			10,11	4.5 V	8	41	ns
			53,55	4.5 V	8	41	ns
			54	4.5 V	8	44	ns
Output disable time 5/, 6/	t_{PHZ} t_{PLZ}	C_L = 50 pF ±10% R_L = 1k ±10%	53,55	4.5 V	8	41	ns
			54	4.5 V	8	44	ns
			03,04, 05	4.5 V	5	35	ns
			10,11	4.5 V	8	41	ns
Output enable time 5/, 6/	t_{PZH} t_{PZL}	C_L = 50 pF ±10% R_L = 1k ±10%	60,61	4.5 V	10	53	ns
			06,07	4.5 V	5	51	ns
			08,09	4.5 V	5	44	ns
Output disable time 5/, 6/	t_{PHZ} t_{PLZ}	C_L = 50 pF ±10% R_L = 1k ±10%	60,61	4.5 V	10	41	ns
			06,07	4.5 V	5	51	ns
			08,09	4.5 V	5	41	ns
Transition 5/, 6/	t_{THL} t_{TLH}	C_L = 50 pF ±10%	01,02	4.5 V	3	20	ns
			03-11	4.5 V	2	16	ns
			51,52	4.5 V	3	20	ns
			53-55, 60,61	4.5 V	2	16	ns

1/ Complete terminal conditions and limits shall be as specified in table III.

2/ Power dissipation capacitance (C_{PD}) typically per inverter (01, 02, 51, 52) or per buffer (03-11, 53-55, 60, 61).

3/ Guaranteed but not tested.

4/ I_{OZL} set buffer output to high state.

I_{OZH} set buffer output to low state.

5/ Tested at V_{CC} = 4.5 V at +125°C for sample testing and V_{CC} = 4.5 V at +25°C for screening. Guaranteed at other V_{CC} voltages and temperatures, see table IA and exception in 4.4.1d.

6/ For propagation and transition delay times at V_{CC} = 2.0 V, increase limit by a factor of 5. For propagation and transition delay times at V_{CC} = 6.0 V, decrease limit by a factor of .85.

7/ Total supply current I_{CC} $+I_{CC\Delta}$.

TABLE IA. Calculated dynamic figures at -55/25 ambient temperature (°C).

V_{CC}	T_A = (°C)	
	+125	-55/+25
2.0 V	5	5 x 0.75
4.5 V	1	0.75
6.0 V	0.85	0.85 x 0.75

Normalized numbers
(+125°C equals 1)

NOTE: The 2.0 V and 6.0 V numbers are derived from their 4.5 V integer value, rounding off according 5/4.

TABLE II. Burn-in and electrical test requirements.

Line no.	Applicable tests and MIL-STD-883 test method	Class S device 1/				Class B device 1/			
		Ref. par.	Table III subgroups 2/	Table IV delta limits 3/	Test circuit figure	Ref. par.	Table III subgroups 2/	Table IV delta limits 3/	Test circuit figure
1	Interim electrical parameters (method 5004)		1				1		
2	Static burn-in I (method 1015)	4.2b 4.5.2	Req'd		3		Not req'd		
3	Same as line 1		1	Δ					
4	Static burn-in II (method 1015)	4.2b 4.5.2	Req'd		3	4.2b 4.5.2	Req'd 4/		3
5	Same as line 1	4.2d	1*	Δ		4.2d	1* 4/	Δ	
6	Dynamic burn-in (method 1015)	4.2b 4.5.2	Req'd				Not req'd		
7	Same as line 1	4.2d	1	Δ					
8	Final electrical parameters (method 5004)		1*, 2, 3, 7, 8, 9 5/				1*, 2, 7, 9 3/, 4/ 5/		
9	Group A test requirements (method 5004)	4.4.1	1, 2, 3, 4, 7, 8, 9, 10, 11 5/			4.4.1	1, 2, 3, 4, 7, 8, 9, 10, 11 5/		
10	Group B end-point electrical parameters (method 5005)	4.4.2	+1, 2, 3, 7, 8, 9, 10, 11 5/, 6/	Δ			+1 6/		
11	Group C end-point electrical parameters (method 5005)					4.4.3	1, 2	Δ	
12	Group D end-point electrical parameters (method 5005)	4.4.4	1, 2, 3			4.4.4	1, 2		

1/ Blank spaces indicates tests are not applicable.

2/ * indicates PDA applies to subgroup 1 (see 4.2.1).

3/ Δ indicates delta limit shall be required only on table III subgroup 1, where specified, and the delta values shall be computed with reference to the previous interim electrical parameters (line 1).

4/ The device manufacturer may at his option either complete subgroup 1 electrical parameter measurements, including delta measurements, within 96 hours after burn-in completion (removal of bias); or may complete subgroup 1 electrical measurements without delta measurements within 24 hours after burn-in completion (removal of bias).

5/ Subgroups 7 and 8 do not apply to device types 01, 02, 51, 52.

6/ + indicates also applies to electrostatic discharge sensitivity tests.

4.2.1 Percent defective allowable (PDA).

a. The PDA for class S devices shall be 5 percent for static burn-in and 5 percent for dynamic burn-in, based on the exact number of devices submitted to each separate burn-in.

b. Static burn-in I and II the failures shall be cumulative for determining the PDA.

c. The PDA for class B devices shall be in accordance with MIL-M-38510 for static burn-in. Dynamic burn-in is not required.

d. Those devices whose measured characteristics, after burn-in, exceed the specified delta (Δ) limits or electrical parameter limits specified in table III, subgroup 1, are defective and shall be removed from the lot. The verified failures divided by the total number of devices in the lot initially submitted to burn-in shall be used to determine the percent defective for the lot and the lot shall be accepted or rejected based on the specified PDA.

4.3 Qualification inspection. Qualification inspection shall be in accordance with MIL-M-38510. Inspections to be performed shall be those specified in method 5005 of MIL-STD-883 and herein for groups A, B, C, D, and E inspections (see 4.4.1 through 4.4.5).

4.4 Quality conformance inspection. Quality conformance inspection shall be in accordance with MIL-M-38510 and as specified herein. Inspections to be performed shall be those specified in method 5005 of MIL-STD-883 and herein for groups A, B, C, D, and E inspections (see 4.4.1 through 4.4.5).

4.4.1 Group A inspection. Group A inspection shall be in accordance with table I of method 5005 of MIL-STD-883 and as follows:

a. Tests shall be performed in accordance with table II herein.

b. Subgroups 5 and 6 of table I of method 5005 of MIL-STD-883 shall be omitted.

c. Subgroup 4 (C_i and C_o measurements) shall be measured only for initial qualification and after process or design changes which may affect input capacitance. Capacitance shall be measured between the designated terminal and V_{SS} at a frequency of 1 MHz.

d. Subgroups 9 and 11 shall be measured only for initial qualification and after process or design changes which may affect dynamic performance.

4.4.2 Group B inspection. Group B inspection shall be in accordance with table II of method 5005 of MIL-STD-883 and as follows:

a. Class S steady-state life test circuits shall be submitted to the qualifying activity for approval. When the alternate steady-state life test is used, the circuit on figure 3, or equivalent, shall be used.

b. Electrostatic Discharge Sensitivity (ESDS) testing shall be performed in accordance with MIL-STD-883, method 3015. The option to categorize devices as ESD sensitive without performing the test is not allowed. Device types categorized as ESD sensitive shall be further tested using method 3015 modified as follows:

Text continues on page 104.

Device types 01 and 51

Cases C and D

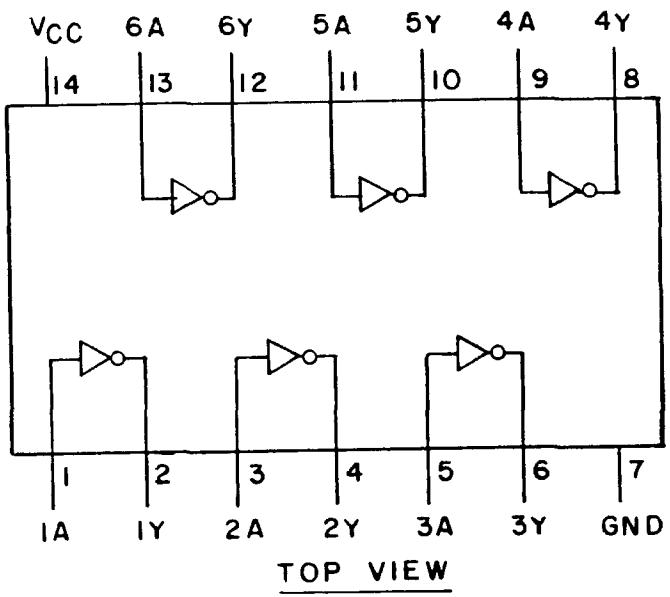

I OF 6 INVERTERS

Device types 01, 02, 51 and 52

Case 2

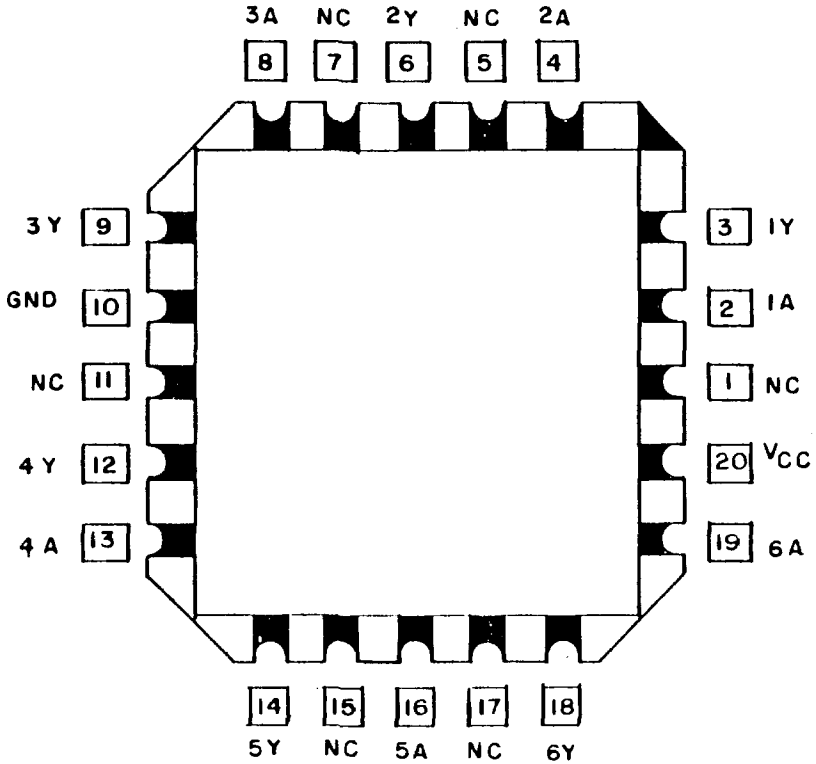

FIGURE 1. Logic diagrams and terminal connections (top view)

Device types 02 and 52

Cases C and D

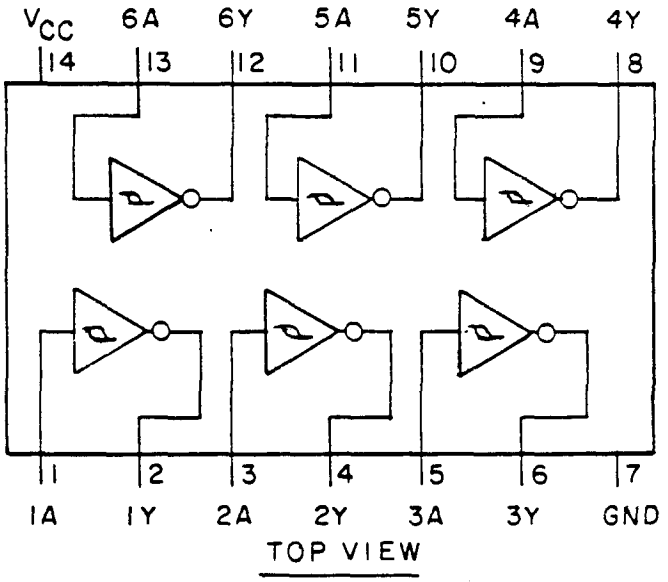

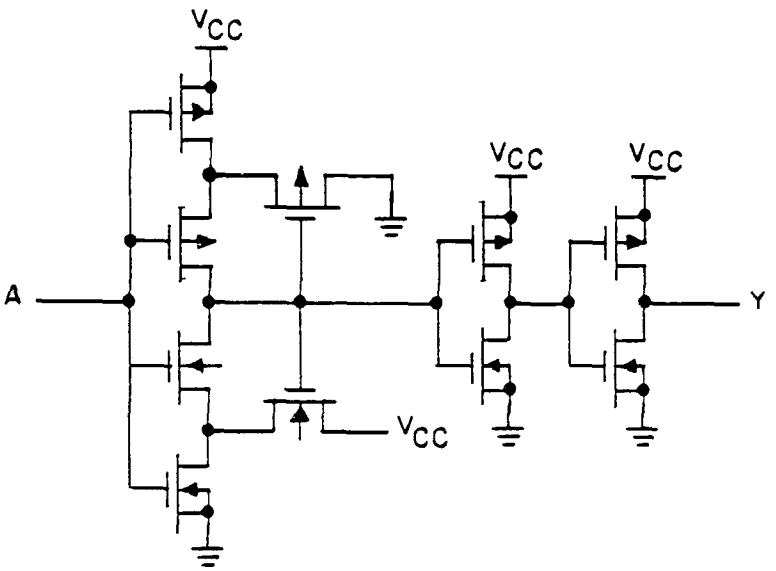

FIGURE 1. Logic diagrams and terminal connections (top view) - *Continued.*

Device types 03 and 53

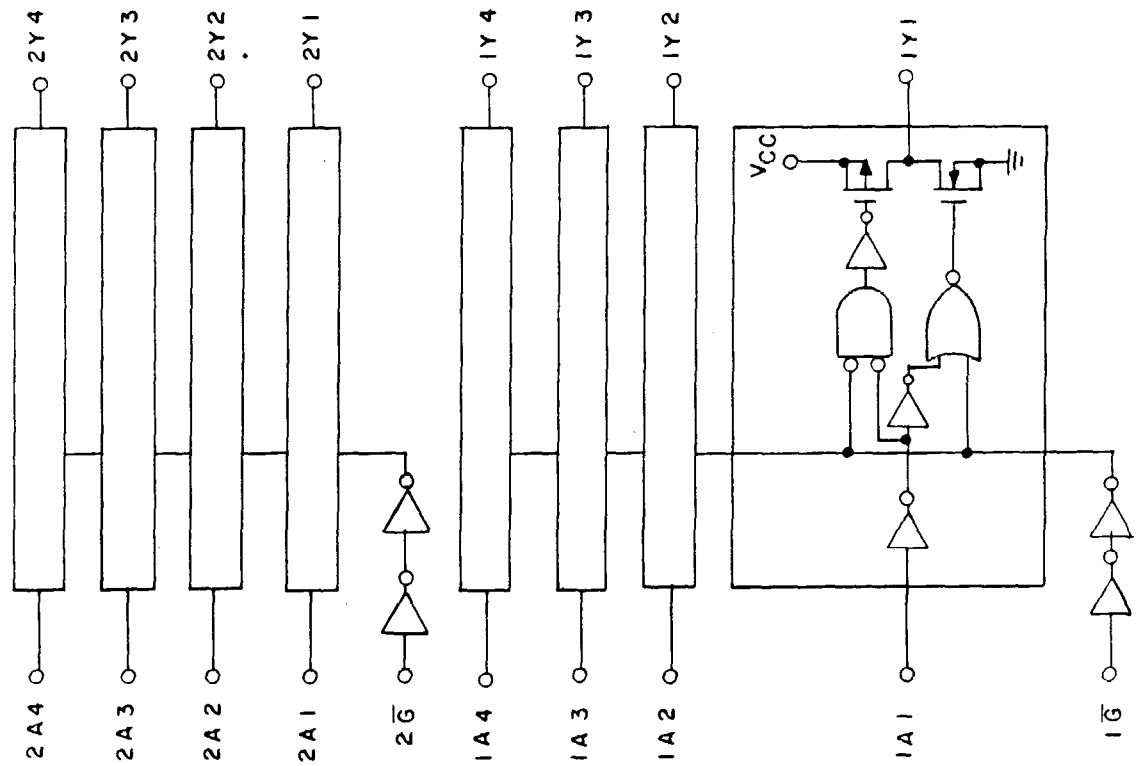

Cases R and S

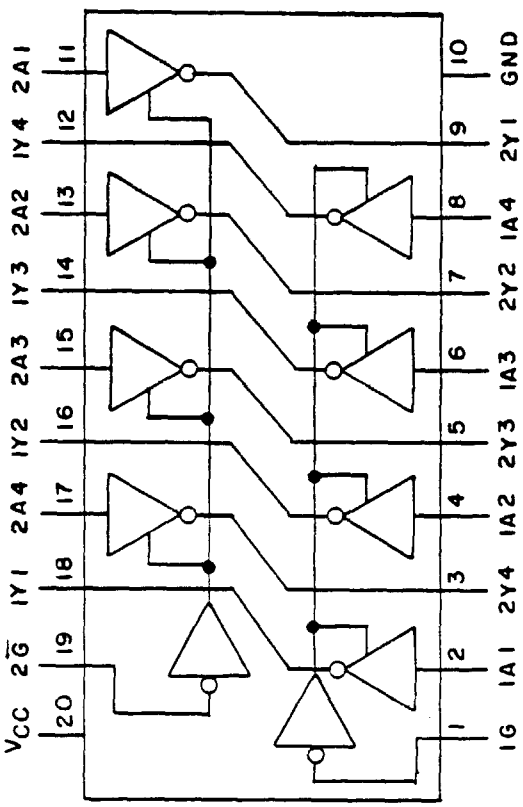

Case 2

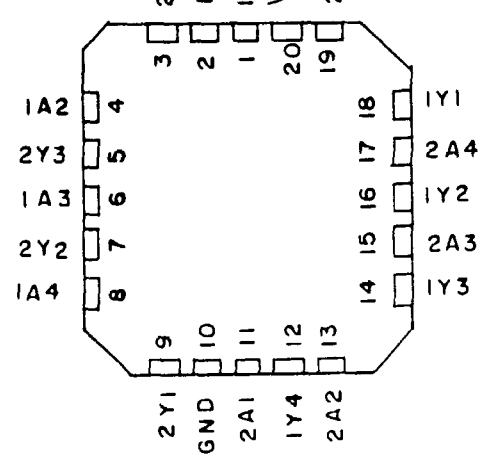

FIGURE 1. Logic diagrams and terminal connections (top view) - Continued.

Device types 04 and 54

Cases R and S

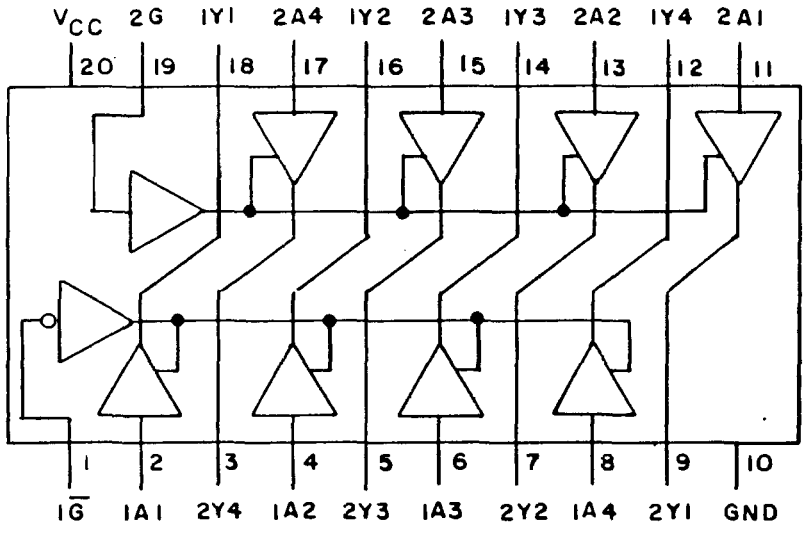

TOP VIEW

Case 2

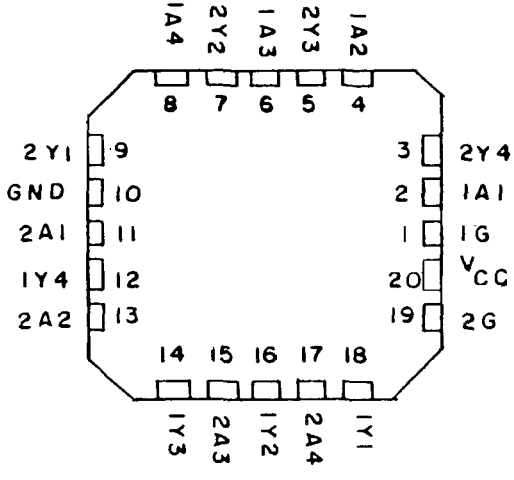

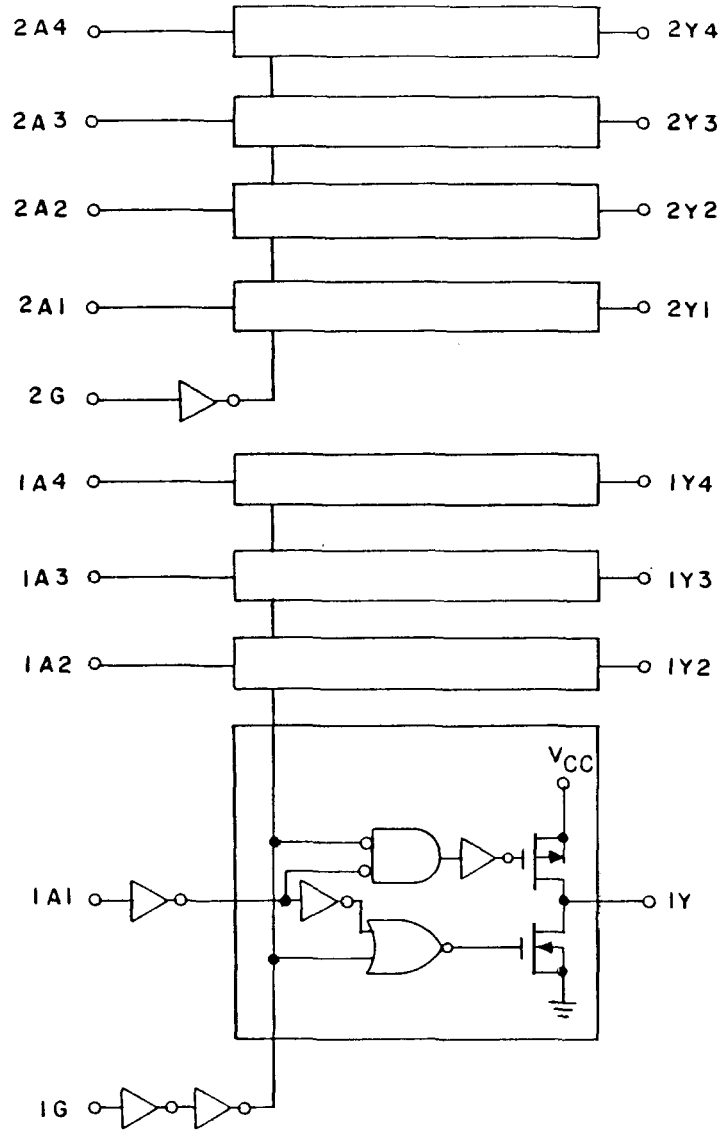

FIGURE 1. Logic diagrams and terminal connections (top view) - Continued.

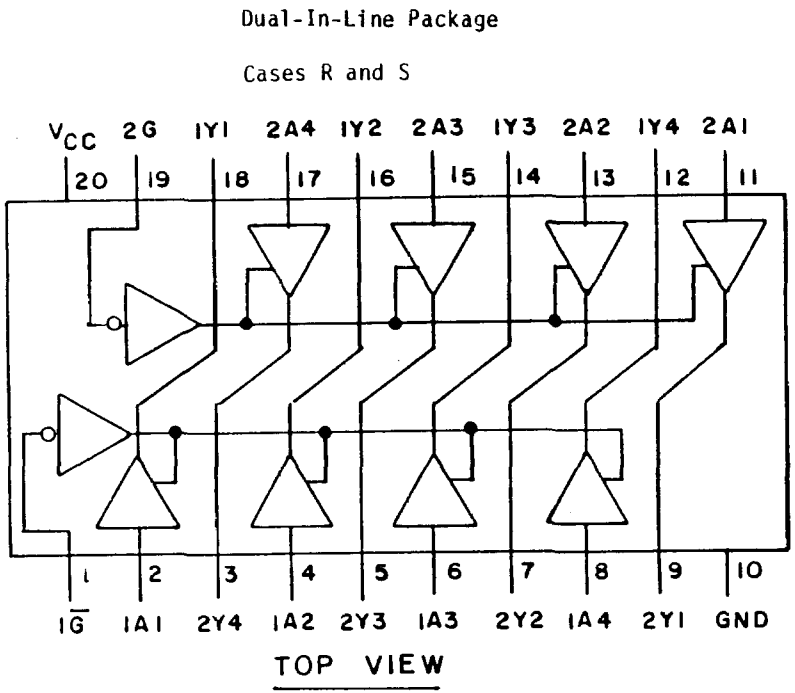

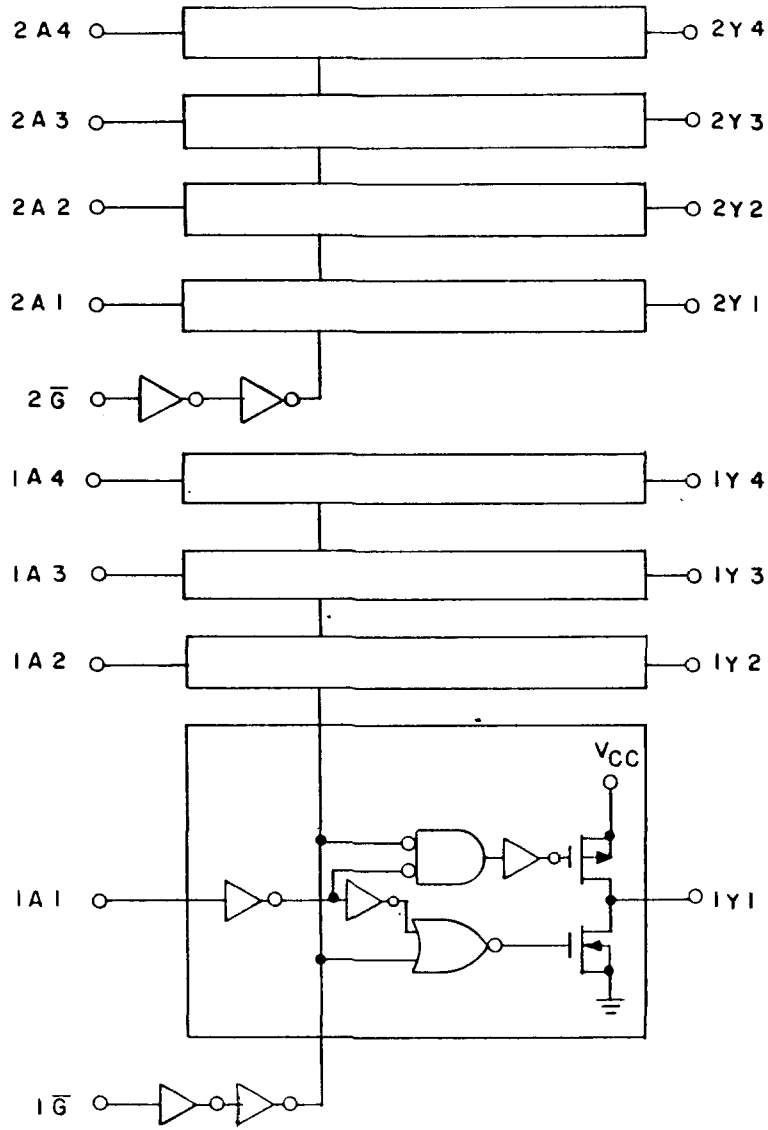

FIGURE 1. Logic diagrams and terminal connections (top view) - Continued.

Device types 05 and 55

Case 2

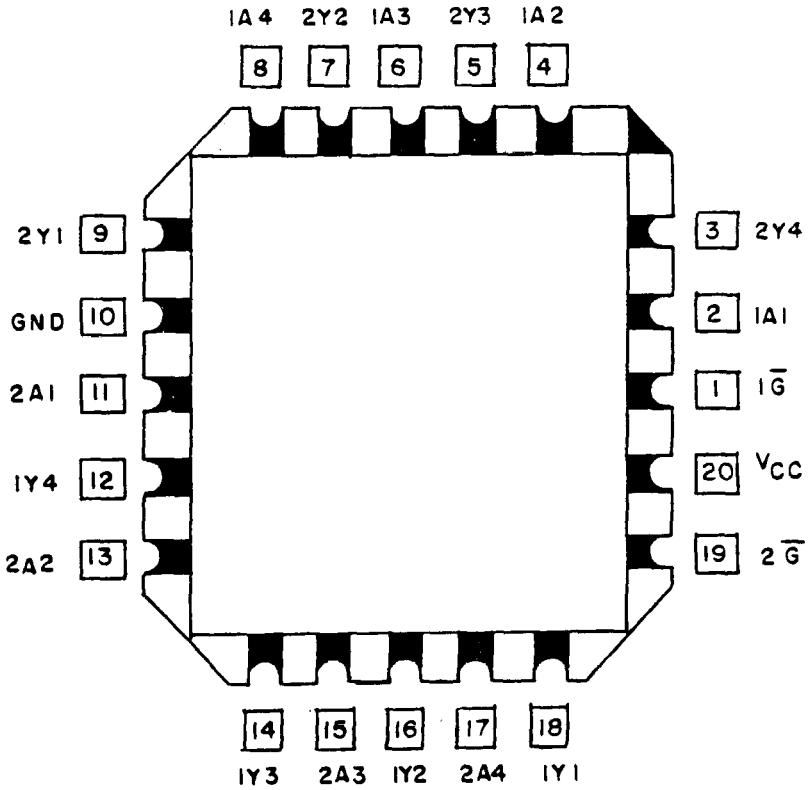

Device types 10 and 60

Cases R and S

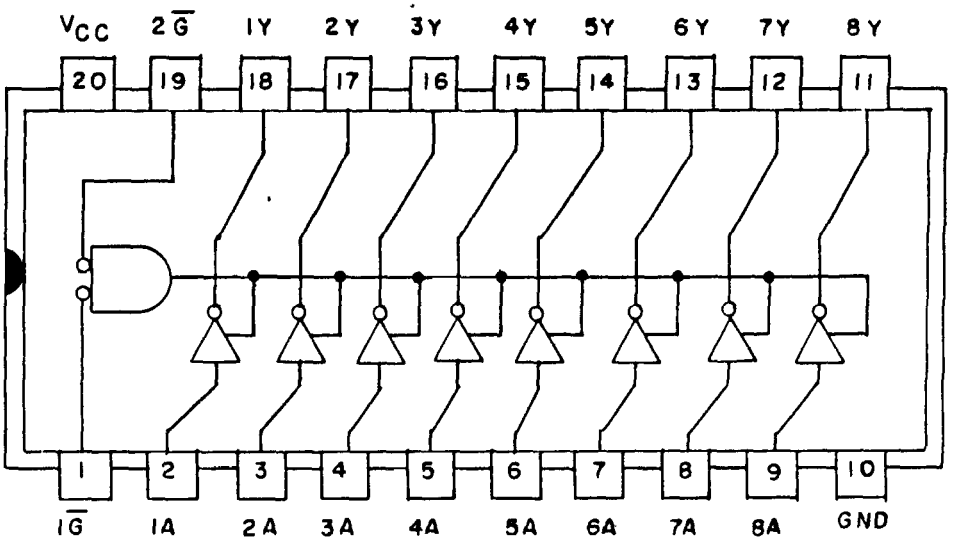

FIGURE 1. Logic diagrams and terminal connections (top view) - Continued.

Device types 10, 11, 60 and 61

Case 2

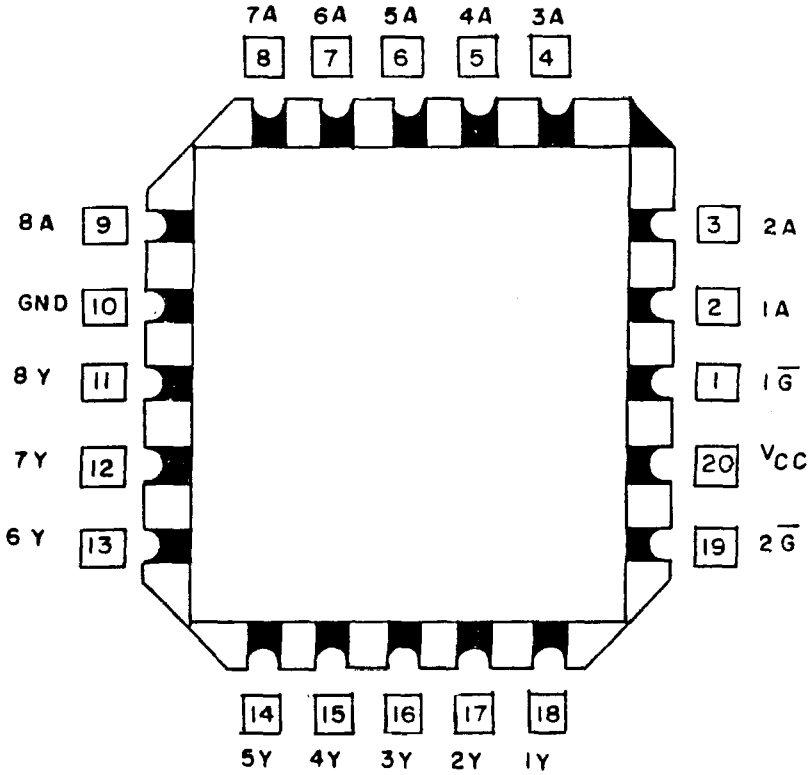

Device types 11 and 61

Cases R and S

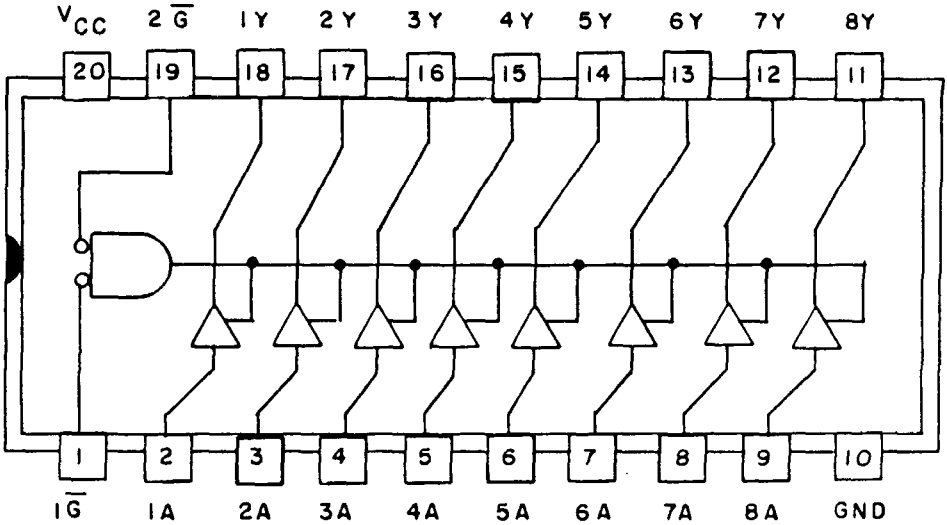

FIGURE 1. Logic diagrams and terminal connections (top view) - Continued.

Device type 06

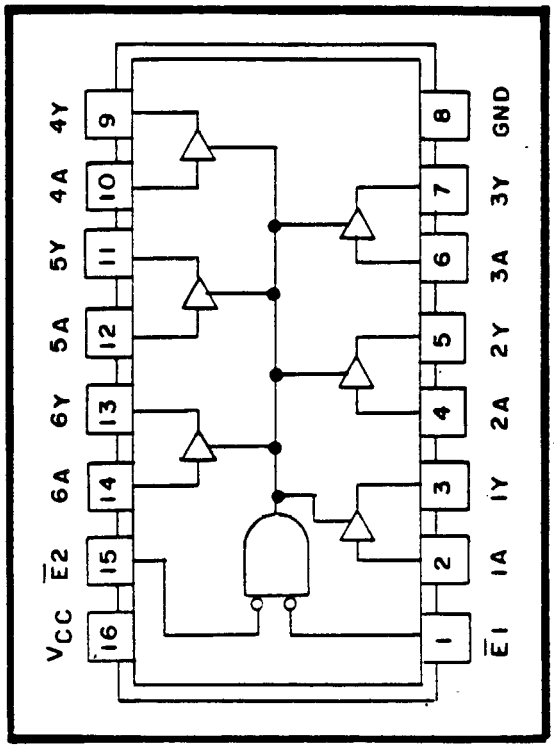

Cases E and F

Device type 07

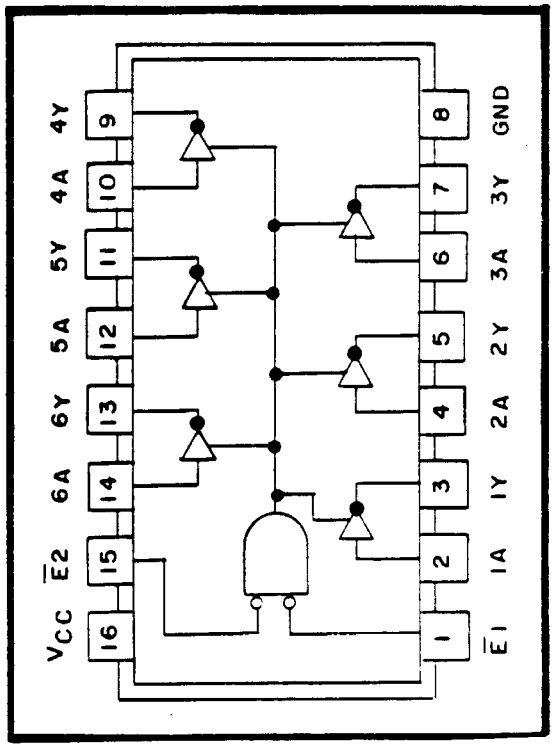

Cases E and F

Device type 08

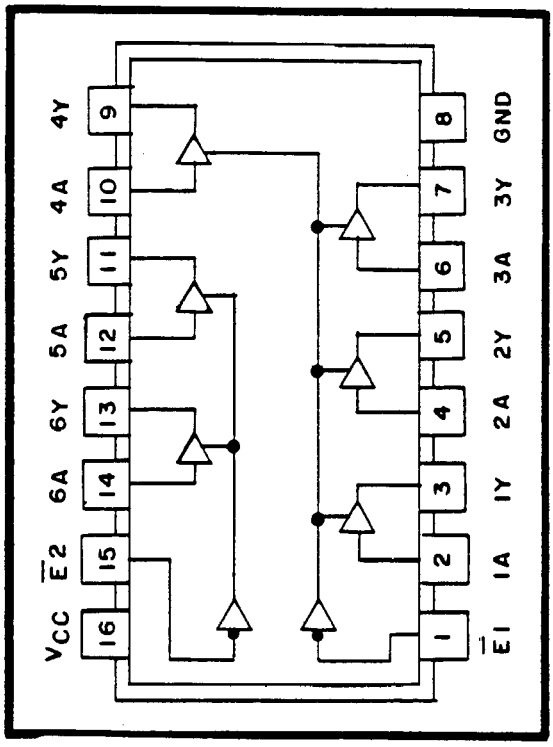

Cases E and F

Device type 09

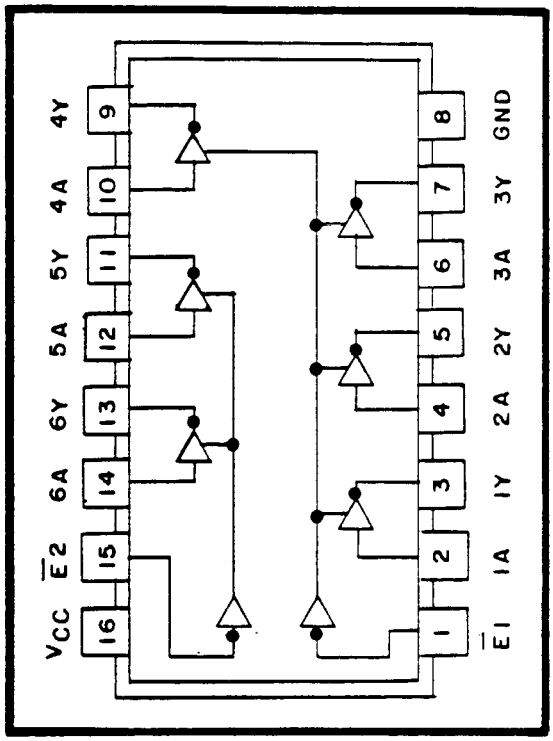

Cases E and F

FIGURE 1. Logic diagrams and terminal connections (top view) - Continued.

Device types 06, 07, 08 and 09

CASE 2

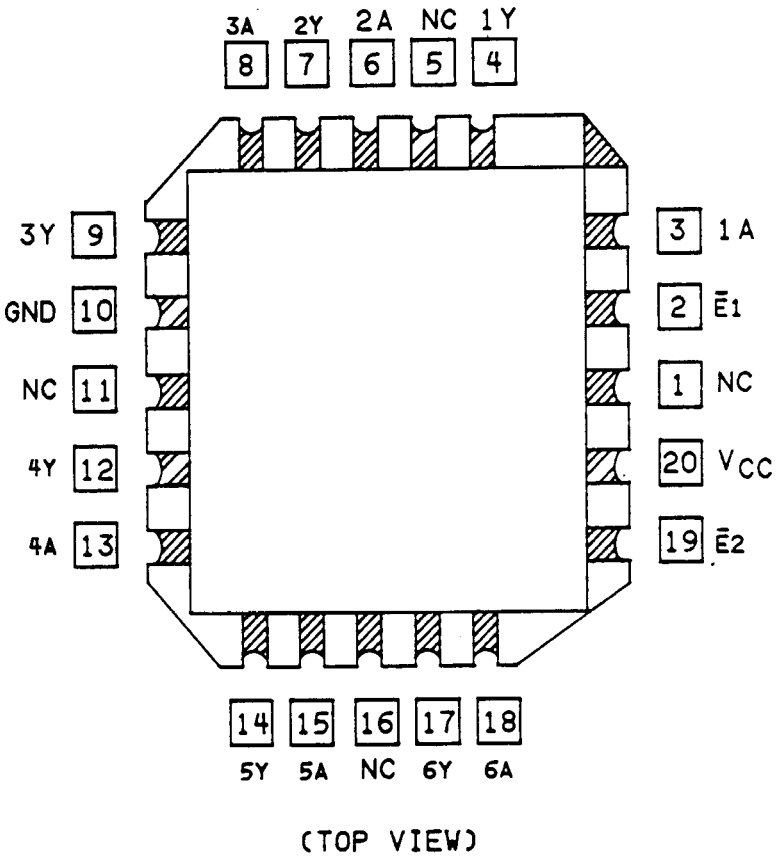

FIGURE 1. Logic diagrams and terminal connections (top view) - Continued.

Device types 01, 51, 02 and 52

Truth table each gate	
Input	Output
A	Y
L	H
H	L

Positive logic Y = A

Device types 03 and 53

Truth table each buffer		
Inputs		Output
$\overline{G}$	A	Y
L	H	L
L	L	H
H	X	Z

H = high level, L = low level, Z = high impedance

Device types 04 and 54

Truth table each buffer					
Inputs		Out	Inputs		Out
$1\overline{G}$	1A	1Y	2G	2A	2Y
L	L	L	L	L	Z
L	H	H	L	H	Z
H	L	Z	H	L	L
H	H	Z	H	H	H

H = high level, L = low level, Z = high impedance

Device types 05 and 55

Truth table each buffer					
Inputs		Out	Inputs		Out
$1\overline{G}$	1A	1Y	$2\overline{G}$	2A	2Y
L	L	L	L	L	L
L	H	H	L	H	H
H	L	Z	H	L	Z
H	H	Z	H	H	Z

H = high level, L = low level, Z = high impedance

Device types 10 and 60

TRUTH TABLE EACH BUFFER			
INPUTS		OUTPUTS	
G1	G2	A	Y
L	L	H	L
L	L	L	H
X	H	X	Z
H	X	X	Z
H	H	X	Z

Device types 11 and 61

Truth table each buffer			
Inputs		Outputs	
1G	2G	A	Y
L	L	L	L
L	L	H	H
X	H	X	Z
H	X	X	Z
H	H	X	Z

FIGURE 2. Truth tables.

Device type 06

Inputs			Outputs
$\overline{E}1$	$\overline{E}2$	A	Y
H	X	X	Z
X	H	X	Z
L	L	H	H
L	L	L	L

Device type 07

Inputs			Output
$\overline{E}1$	$\overline{E}2$	A	Y
H	X	X	Z
X	H	X	Z
L	L	H	L
L	L	L	H

Device type 08

Inputs		Output
$\overline{E}1$	$\overline{A}$	Y
H	X	Z
L	H	H
L	L	L

Device type 09

Inputs		Output
$\overline{E}$	A	Y
H	X	Z
L	H	L
L	L	H

H = High level
L = Low level
X = Irrelevant
Z = High-impedance

FIGURE 2. Truth tables - Continued.

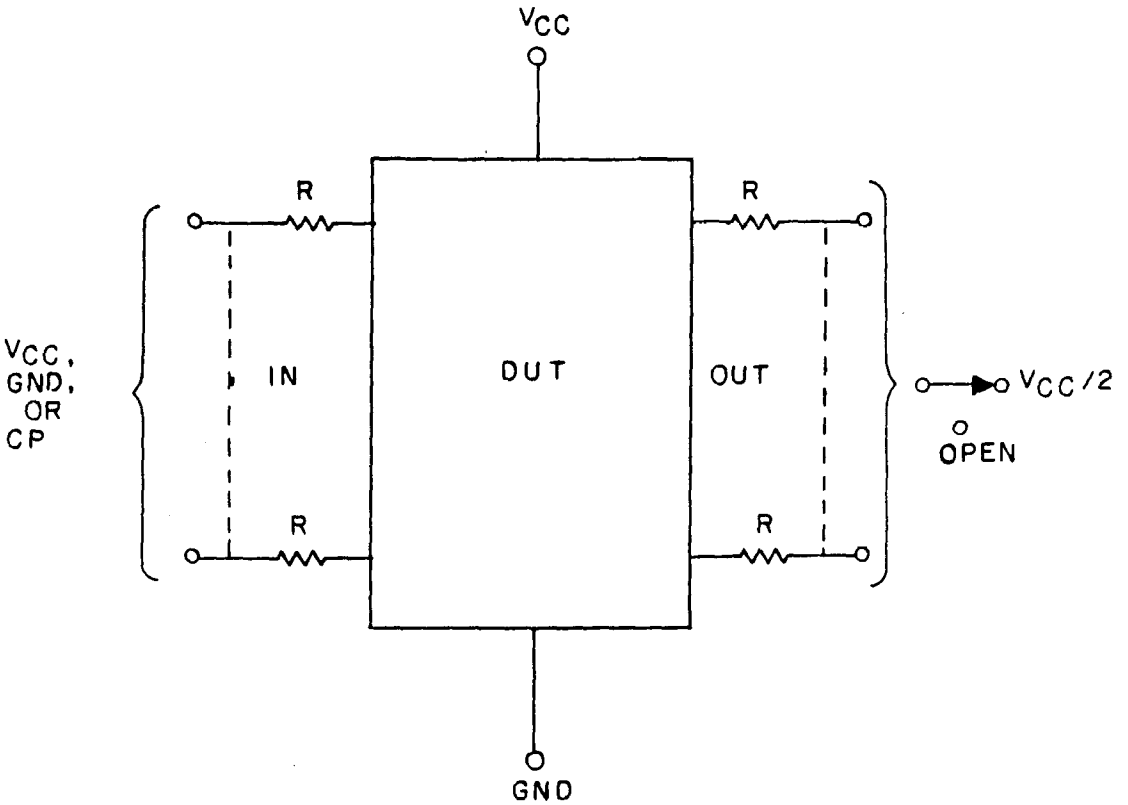

NOTES:

1. For static burn-in I, all inputs shall be connected to GND. Outputs shall be open or connected to $V_{CC}/2$. Resistors are optional on outputs if open. Resistors are required on inputs, and required on outputs connected to $V_{CC}/2$. R = 680Ω to 47 kΩ.
2. For static burn-in II, all inputs shall be connected through the resistors to V_{CC}. Outputs shall be open or connected to $V_{CC}/2$. Resistors are optional on outputs if open. Resistors are required on inputs, and required on outputs connected to $V_{CC}/2$. R = 680Ω to 47 kΩ.
3. V_{CC} = 6.0 V ±0.5 V, for device types 01-11.
   V_{CC} = 5.5 V ±0.5 V, for device types 51, 51, 53, 54, 55, 60, and 61.

FIGURE 3. Static burn-in and life test circuits.

Device types 01, 02, 51 and 52

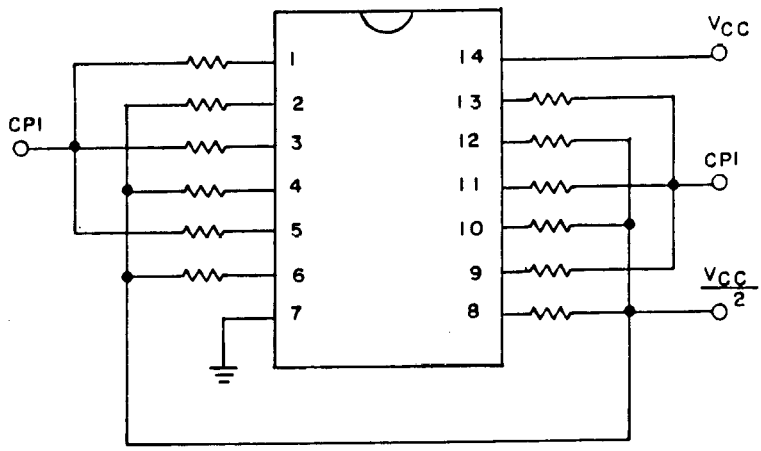

Device types 03, 05, 53 and 55

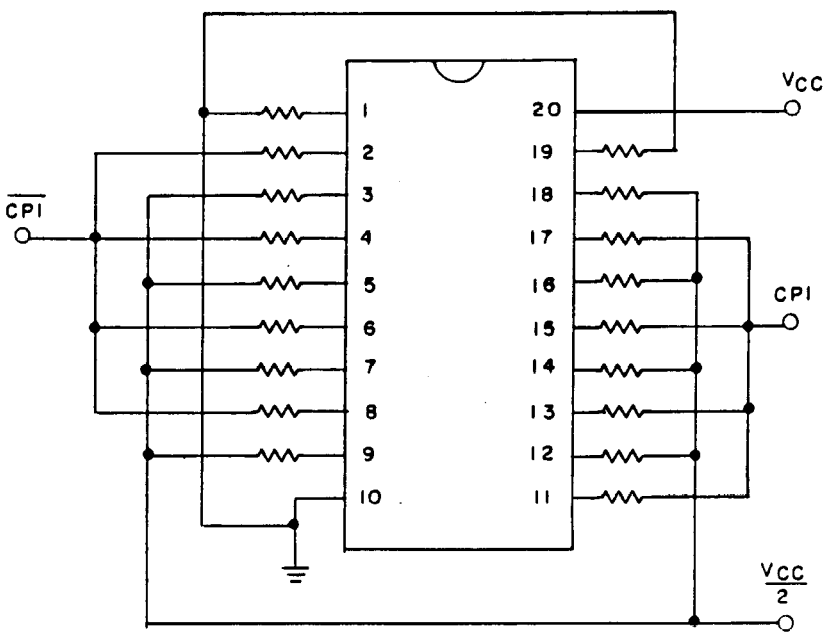

FIGURE 3. Dynamic burn-in and life test circuits.

Device types 04 and 54

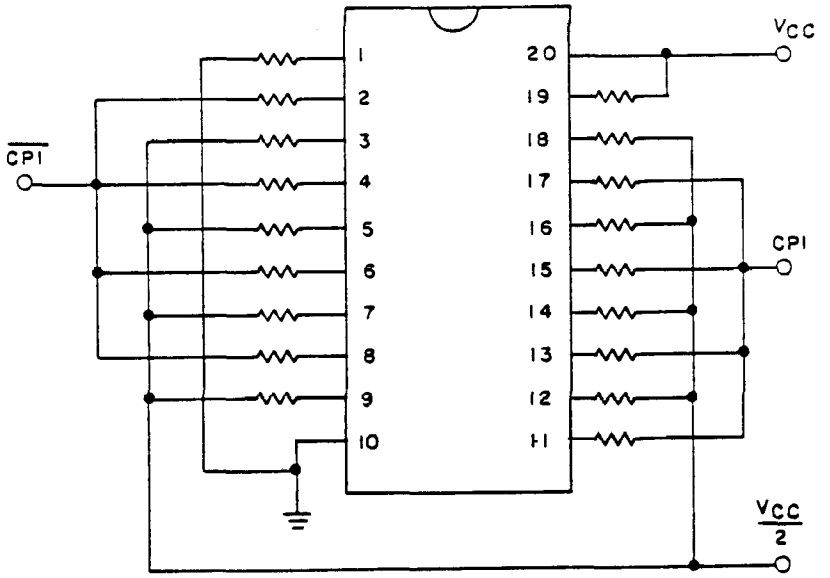

Device types 10, 11, 60 and 61

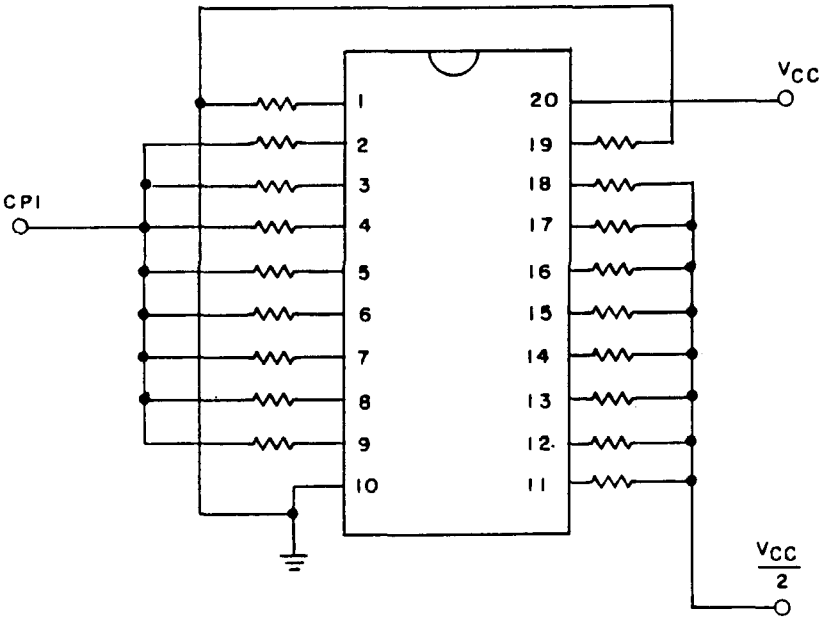

FIGURE 3. Dynamic burn-in and life test circuits - Continued.

Device types 06, 07, 08 and 09

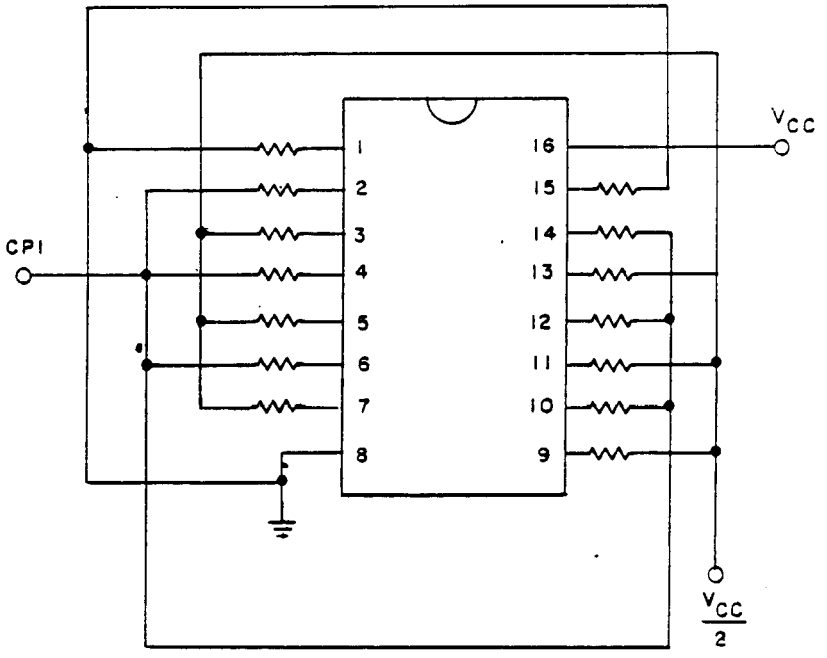

NOTES:
1. Input resistor = 680Ω to 47 KΩ ±20%.
2. Output resistors = 1 KΩ ±5%, device types 01, 02, 51, 52, other device types = 680Ω ±5% maximum.
3. V_{CC} = 6.0 V ±0.5 V, device types 01-11; V_{CC} = 5.5 V, device types 51-55, 60, 61.
4. $V_{CC} = V_{CC}$ ±0.5 V.
5. CPI/$\overline{CPI}$ = 25 kHz to 1 MHz square wave; duty cycle = 50 ±15%; V_{IH} = 4.5 V min to V_{CC} volts maximum; V_{IL} = 0 V ±.5 V; t_{THL}, $t_{TLH} \leq$ 500 µs.

FIGURE 3. Dynamic burn-in and life test circuits - Continued.

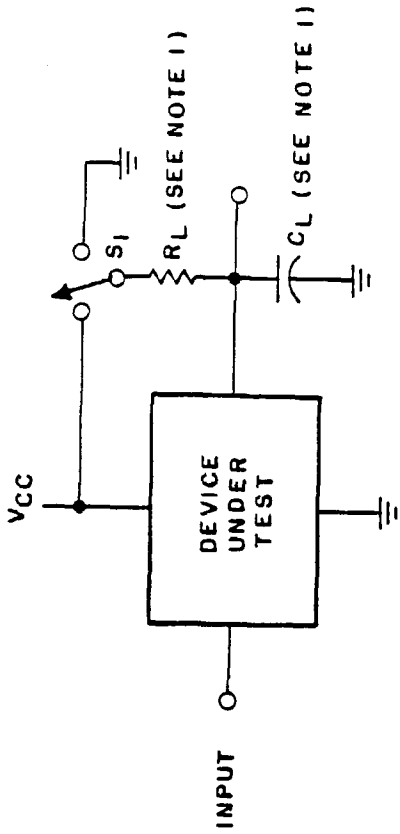

Test Circuit for THREE-STATE Output
Tests see Note 2

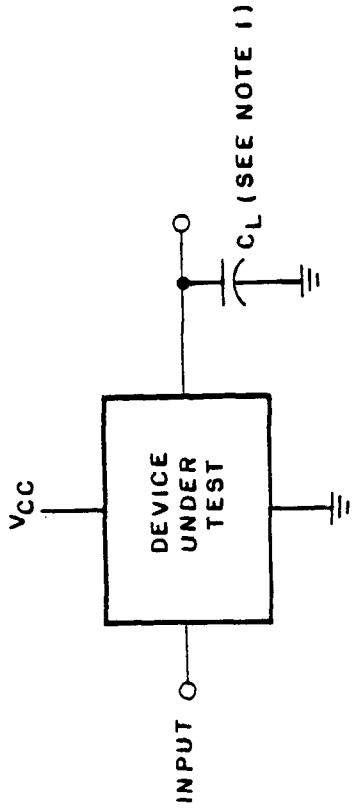

Test Circuit for Push Pull Outputs

FIGURE 4. Switching time test circuit and waveforms.

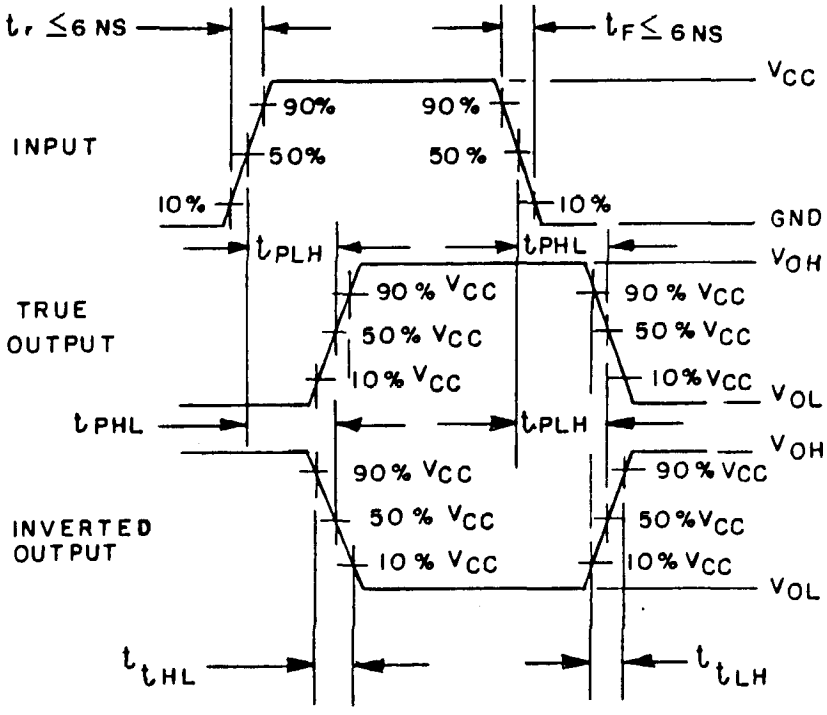

Propagation Delay Waveforms

FIGURE 4. Switching time test circuit and waveforms - Continued.

Device types 03-11, 53, 54, 55, 60 and 61 (see note 5).

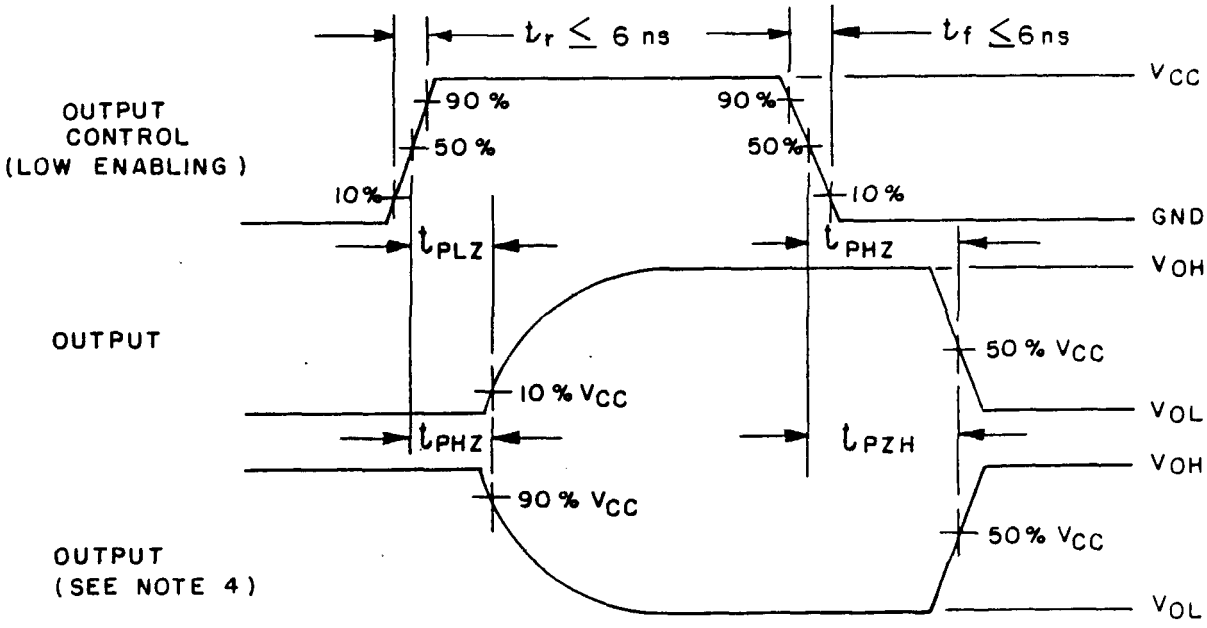

THREE-STATE Output Enable and Disable Waveforms

NOTES:
1. C_L includes load and test jig capacitance. See table I for values.
2. S1 = V_{CC} for t_{PZL}, and t_{PLZ} measurements.
   S1 = GND for t_{PZH}, and t_{PHZ} measurements.
3. Waveform for negative edge sensitive circuits will be inverted.
4. This waveform is applicable to THREE-STATE switching time measurements.
5. The input signal for HCT device types (51-55, 60, 61) will be 0-3 volts; however, the 50% V_{CC} measure point is 1.3 volts for input and output signals. The 10% V_{CC} and 90% V_{CC} points are .3 V and 2.7 V; respectively.

FIGURE 4. Switching time test circuit and waveforms - Continued.

TABLE III. Group A inspection for device type 01.

Symbol	MIL-STD-883 method	Case	Terminal conditions 1/														Measured terminal	Test limits						Unit
		2	2	3	4	6	8	9	10	12	13	14	16	18	19	20		Subgroup 1		Subgroup 2		Subgroup 3		
		C	1	2	3	4	5	6	7	8	9	10	11	12	13	14		T_C = +25°C		T_C = +125°C		T_C = -55°C		
		Test no.	1A	1Y	2A	2Y	3A	3Y	GND	4Y	4A	5Y	5A	6Y	6A	V_{CC}		Min	Max	Min	Max	Min	Max	
V_{IC} (pos)		1	1 mA						OPEN							GND	1A	1/	1.5					V
		2			1 mA				"							"	2A	"	"					"
		3					1 mA		"							"	3A	"	"					"
		4							"		1 mA					"	4A	"	"					"
		5							"				1 mA			"	5A	"	"					"
		6							"						1 mA	"	6A	"	"					"
V_{IC} (neg)		7	-1 mA						GND							OPEN	1A		-1.5					"
		8			-1 mA				"							"	2A		"					"
		9					-1 mA		"							"	3A		"					"
		10							"		-1 mA					"	4A		"					"
		11							"				-1 mA			"	5A		"					"
		12							"						-1 mA	"	6A		"					"
I_{CC}	3005	13	GND		GND		GND		"		GND		GND		GND	6 V	V_{CC}		0.1		10			μA
I_{CC}	3005	14	6 V		6 V		6 V		"		6 V		6 V		6 V	"	V_{CC}		0.1		10			μA
V_{OH3}	3006	15	1.2 V	-20 μA					"							"	1Y	5.95		5.95		5.95		V
		16			1.2 V	-20 μA			"							"	2Y	"		"		"		"
		17					1.2 V	-20 μA	"							"	3Y	"		"		"		"
		18							"	-20 μA	1.2 V					"	4Y	"		"		"		"
		19							"			-20 μA	1.2 V			"	5Y	"		"		"		"
		20							"					-20 μA	1.2 V	"	6Y	"		"		"		"
V_{OH5}	3006	21	1.2 V	-5.2 mA					"							"	1Y	5.48		5.2		5.48		"
		22			1.2 V	-5.2 mA			"							"	2Y	"		"		"		"
		23					1.2 V	-5.2 mA	"							"	3Y	"		"		"		"
		24							"	-5.2 mA	IN					"	4Y	"		"		"		"
		25							"			-5.2 mA	1.2 V			"	5Y	"		"		"		"
		26							"					-5.2 mA	1.2 V	"	6Y	"		"		"		"
V_{OL3}	3007	27	4.2 V	20 μA					"							"	1Y		0.05		0.05		0.05	"
		28			4.2 V	20 μA			"							"	2Y		"		"		"	"
		29					4.2 V	20 μA	"							"	3Y		"		"		"	"
		30							"	20 μA	4.2 V					"	4Y		"		"		"	"
		31							"			20 μA	4.2 V			"	5Y		"		"		"	"
		32							"					20 μA	4.2 V	"	6Y		"		"		"	"
V_{OL5}	3007	33	4.2 V	5.2 mA					"							"	1Y		0.26		0.4		0.26	"
		34			4.2 V	5.2 mA			"							"	2Y		"		"		"	"
		35					4.2 V	5.2 mA	"							"	3Y		"		"		"	"
		36							"	5.2 mA	4.2 V					"	4Y		"		"		"	"
		37							"			5.2 mA	4.2 V			"	5Y		"		"		"	"
		38							"					5.2 mA	4.2 V	"	6Y		"		"		"	"
I_{OS4}	3011	39	GND	GND	GND		GND		"		GND		GND		GND	4 V	1Y	-10	-120	-10	-120	-10	-120	mA
		40	"		"	GND	"		"		"		"		"	"	2Y	"	"	"	"	"	"	"
		41	"		"		"	GND	"		"		"		"	"	3Y	"	"	"	"	"	"	"
		42	"		"		"		"	GND	"		"		"	"	4Y	"	"	"	"	"	"	"
		43	"		"		"		"		"	GND	"		"	"	5Y	"	"	"	"	"	"	"
		44	"		"		"		"		"		"	GND	"	"	6Y	"	"	"	"	"	"	"
I_{IH}	3010	45	6 V		"		"		"		"		"		"	6 V	1A		.05		0.1			μA
		46	GND		6 V		"		"		"		"		"	"	2A		"		"			"
		47	"		GND		6 V		"		"		"		"	"	3A		"		"			"
		48	"		"		GND		"		6 V		"		"	"	4A		"		"			"
		49	"		"		"		"		GND		6 V		"	"	5A		"		"			"
		50	"		"		"		"		GND		GND		6 V	"	6A		"		"			"

TABLE III. Group A inspection for device type 01 - Continued.

Symbol	MIL-STD-883 method	Case	Terminal conditions 1/														Measured terminal	Test limits						Unit
		2	2	3	4	6	8	9	10	12	13	14	16	18	19	20		Subgroup 1		Subgroup 2		Subgroup 3		
		C	1	2	3	4	5	6	7	8	9	10	11	12	13	14		T_C = +25°C		T_C = +125°C		T_C = -55°C		
		Test no.	1A	1Y	2A	2Y	3A	3Y	GND	4Y	4A	5Y	5A	6Y	6A	V_{CC}		Min	Max	Min	Max	Min	Max	
I_{IL}	3009	51	GND		6 V		6 V		GND		6 V		6 V		6 V	6 V	1A		-.05		-0.1			μA
		52	6 V		GND		6 V		"		"		"		"	"	2A		"		"			"
		53	"		6 V		GND		"		"		"		"	"	3A		"		"			"
		54	"		"		6 V		"		GND		"		"	"	4A		"		"			"
		55	"		"		"		"		6 V		GND		"	"	5A		"		"			"
		56	"		"		"		"		6 V		6 V		GND	"	6A		"		"			"
																		Subgroup 4 T_C = +25°C						
																		Min	Max					
C_j	3012	57	2/						GND							GND	1A		10					pF
		58			2/				"							"	2A		"					"
		59					2/		"							"	3A		"					"
		60							"		2/					"	4A		"					"
		61							"				2/			"	5A		"					"
		62							"						2/	"	6A		"					"
																		Subgroup 9 T_C = +25°C		Subgroup 10 T_C = +125°C		Subgroup 11 T_C = -55°C		
																		Min	Max	Min	Max	Min	Max	
t_{PHL}	3003 (Fig. 4)	63	IN	OUT					GND							4.5 V	1A to 1Y	4	17	4	22	4	17	ns
		64			IN	OUT			"							"	2A to 2Y	"	"	"	"	"	"	"
		65					IN	OUT	"							"	3A to 3Y	"	"	"	"	"	"	"
		66							"	OUT	IN					"	4A to 4Y	"	"	"	"	"	"	"
		67							"			OUT	IN			"	5A to 5Y	"	"	"	"	"	"	"
		68							"					OUT	IN	"	6A to 6Y	"	"	"	"	"	"	"
t_{PLH}	3003 (Fig. 4)	69	IN	OUT					"							"	1A to 1Y	"	"	"	"	"	"	"
		70			IN	OUT			"							"	2A to 2Y	"	"	"	"	"	"	"
		71					IN	OUT	"							"	3A to 3Y	"	"	"	"	"	"	"
		72							"	OUT	IN					"	4A to 4Y	"	"	"	"	"	"	"
		73							"			OUT	IN			"	5A to 5Y	"	"	"	"	"	"	"
		74							"					OUT	IN	"	6A to 6Y	"	"	"	"	"	"	"
t_{THL}	3004 (Fig. 4)	75	IN	OUT					"							"	1Y	3	15	3	20	3	15	"
		76			IN	OUT			"							"	2Y	"	"	"	"	"	"	"
		77					IN	OUT	"							"	3Y	"	"	"	"	"	"	"
		78							"	OUT	IN					"	4Y	"	"	"	"	"	"	"
		79							"			OUT	IN			"	5Y	"	"	"	"	"	"	"
		80							"					OUT	IN	"	6Y	"	"	"	"	"	"	"
t_{TLH}	3004 (Fig. 4)	81	IN	OUT					"							"	1Y	"	"	"	"	"	"	"
		82			IN	OUT			"							"	2Y	"	"	"	"	"	"	"
		83					IN	OUT	"							"	3Y	"	"	"	"	"	"	"
		84							"	OUT	IN					"	4Y	"	"	"	"	"	"	"
		85							"			OUT	IN			"	5Y	"	"	"	"	"	"	"
		86							"					OUT	IN	"	6Y	"	"	"	"	"	"	"

See footnotes at end of table.

TABLE III. Group A inspection for device type 02.

Symbol	MIL-STD-883 method	Case	Terminal conditions 1/														Measured terminal	Test limits						Unit
		2	2	3	4	6	8	9	10	12	13	14	16	18	19	20		Subgroup 1 T_C = +25°C		Subgroup 2 T_C = +125°C		Subgroup 3 T_C = -55°C		
		C	1	2	3	4	5	6	7	8	9	10	11	12	13	14								
		Test no.	1A	1Y	2A	2Y	3A	3Y	GND	4Y	4A	5Y	5A	6Y	6A	V_{CC}		Min	Max	Min	Max	Min	Max	
V_{IC} (pos)		1	1 mA						OPEN							GND	1A	1/	1.5					V
		2			1 mA				"							"	2A	"	"					"
		3					1 mA		"							"	3A	"	"					"
		4							"		1 mA					"	4A	"	"					"
		5							"				1 mA			"	5A	"	"					"
		6							"						1 mA	"	6A	"	"					"
V_{IC} (neg)		7	-1 mA						GND							OPEN	1A		"					V
		8			-1 mA				"							"	2A		"					"
		9					-1 mA		"							"	3A		"					"
		10							"		-1 mA					"	4A		"					"
		11							"				-1 mA			"	5A		"					"
		12							"						-1 mA	"	6A		"					"
I_{CC}	3005	13	GND		GND		GND		"		GND		GND		GND	6 V	V_{CC}		0.1		10			μA
I_{CC}	3005	14	6 V		6 V		6 V		"		6 V		6 V		6 V	"	V_{CC}		0.1		10			μA
V_{OH3}	3006	15	1.2 V	-20 μA					"							"	1Y	5.95		5.95		5.95		V
		16			1.2 V	-20 μA			"							"	2Y	"		"		"		"
		17					1.2 V	-20 μA	"							"	3Y	"		"		"		"
		18							"	-20 μA	1.2 V					"	4Y	"		"		"		"
		19							"			-20 μA	1.2 V			"	5Y	"		"		"		"
		20							"					-20 μA	1.2 V	"	6Y	"		"		"		"
V_{OH5}	3006	21	1.2 V	-5.2 mA					"							"	1Y	5.48		5.2		5.48		"
		22			1.2 V	-5.2 mA			"							"	2Y	"		"		"		"
		23					1.2 V	-5.2 mA	"							"	3Y	"		"		"		"
		24							"	-5.2 mA	1.2 V					"	4Y	"		"		"		"
		25							"			-5.2 mA	1.2 V			"	5Y	"		"		"		"
		26							"					-5.2 mA	1.2 V	"	6Y	"		"		"		"
V_{T-}	3006	27	3/	OUT					"							"	1Y	1.2	3.2	1.2	3.2	1.2	3.2	"
		28			3/	OUT			"							"	2Y	"	"	"	"	"	"	"
		29					3/	OUT	"							"	3Y	"	"	"	"	"	"	"
		30							"	OUT	3/					"	4Y	"	"	"	"	"	"	"
		31							"			OUT	3/			"	5Y	"	"	"	"	"	"	"
		32							"					OUT	3/	"	6Y	"	"	"	"	"	"	"
V_{OL3}	3007	33	4.2 V	20 μA					"							"	1Y		0.05		0.05		0.05	"
		34			4.2 V	20 μA			"							"	2Y		"		"		"	"
		35					4.2 V	20 μA	"							"	3Y		"		"		"	"
		36							"	20 μA	4.2 V					"	4Y		"		"		"	"
		37							"			20 μA	4.2 V			"	5Y		"		"		"	"
		38							"					20 μA	4.2 V	"	6Y		"		"		"	"
V_{OL5}	3007	39	4.2 V	5.2 mA					"							"	1Y		0.26		0.4		0.26	"
		40			4.2 V	5.2 mA			"							"	2Y		"		"		"	"
		41					4.2 V	5.2 mA	"							"	3Y		"		"		"	"
		42							"	5.2 mA	4.2 V					"	4Y		"		"		"	"
		43							"			5.2 mA	4.2 V			"	5Y		"		"		"	"
		44							"					5.2 mA	4.2 V	"	6Y		"		"		"	"
V_{T+}	3006	45	4/	OUT					"							"	1Y	2.1	4.2	2.1	4.2	2.1	4.2	"
		46			4/	OUT			"							"	2Y	"	"	"	"	"	"	"
		47					4/	OUT	"							"	3Y	"	"	"	"	"	"	"
		48							"	OUT	4/					"	4Y	"	"	"	"	"	"	"
		49							"			OUT	4/			"	5Y	"	"	"	"	"	"	"
		50							"					OUT	4/	"	6Y	"	"	"	"	"	"	"

See footnotes at end of table.

TABLE III. Group A inspection for device type 02 - Continued.

Symbol	MIL-STD-883 method	Case	Terminal conditions 1/														Measured terminal	Test limits						Unit
		2	2	3	4	6	8	9	10	12	13	14	16	18	19	20		Subgroup 1 T_C = +25°C		Subgroup 2 T_C = +125°C		Subgroup 3 T_C = -55°C		
		C	1	2	3	4	5	6	7	8	9	10	11	12	13	14								
		Test no.	1A	1Y	2A	2Y	3A	3Y	GND	4Y	4A	5Y	5A	6Y	6A	V_{CC}		Min	Max	Min	Max	Min	Max	
V_H		51	5/						GND							6 V	1Y	0.5	2.5	0.5	2.5	0.5	2.5	V
		52			5/				"							"	2Y	"	"	"	"	"	"	"
		53					5/		"							"	3Y	"	"	"	"	"	"	"
		54							"		5/					"	4Y	"	"	"	"	"	"	"
		55							"				5/			"	5Y	"	"	"	"	"	"	"
		56							"						5/	"	6Y	"	"	"	"	"	"	"
I_{OS4}	3011	57	GND	GND	GND		GND		"		GND		GND		GND	4 V	1Y	-10	-120	-10	-120	-10	-120	mA
		58	"		"	GND	"		"		"		"		"	"	2Y	"	"	"	"	"	"	"
		59	"		"		"	GND	"		"		"		"	"	3Y	"	"	"	"	"	"	"
		60	"		"		"		"	GND	"		"		"	"	4Y	"	"	"	"	"	"	"
		61	"		"		"		"		"	GND	"		"	"	5Y	"	"	"	"	"	"	"
		62	"		"		"		"		"		"	GND	"	"	6Y	"	"	"	"	"	"	"
I_{IH}	3010	63	6 V		"		"		"		"		"		"	6 V	1A		.05		0.1			µA
		64	GND		6 V		"		"		"		"		"	"	2A		"		"			"
		65	"		GND		6 V		"		"		"		"	"	3A		"		"			"
		66	"		"		GND		"		6 V		"		"	"	4A		"		"			"
		67	"		"		"		"		GND		6 V		"	"	5A		"		"			"
		68	"		"		"		"		GND		GND		6 V	"	6A		"		"			"
I_{IL}	3009	69	"		6 V		6 V		"		6 V		6 V		"	"	1A		-.05		-0.1			"
		70	6 V		GND		6 V		"		"		"		"	"	2A		"		"			"
		71	"		6 V		GND		"		"		"		"	"	3A		"		"			"
		72	"		"		6 V		"		GND		"		"	"	4A		"		"			"
		73	"		"		"		"		6 V		GND		"	"	5A		"		"			"
		74	"		"		"		"		6 V		6 V		GND	"	6A		"		"			"
																		Subgroup 4 T_C = +25°C						
																		Min	Max					
C_i	3012	75	2/						"							GND	1A		10					pF
		76			2/				"							"	2A		"					"
		77					2/		"							"	3A		"					"
		78							"		2/					"	4A		"					"
		79							"				2/			"	5A		"					"
		80							"						2/	"	6A		"					"
																		Subgroup 9 T_C = +25°C		Subgroup 10 T_C = +125°C		Subgroup 11 T_C = -55°C		
																		Min	Max	Min	Max	Min	Max	
t_{PHL}	3003 (Fig. 4)	81	IN	OUT					GND							4.5 V	1A to 1Y	8	25	8	33	8	25	ns
		82			IN	OUT			"							"	2A to 2Y	"	"	"	"	"	"	"
		83					IN	OUT	"							"	3A to 3Y	"	"	"	"	"	"	"
		84							"	OUT	IN					"	4A to 4Y	"	"	"	"	"	"	"
		85							"			OUT	IN			"	5A to 5Y	"	"	"	"	"	"	"
		86							"					OUT	IN	"	6A to 6Y	"	"	"	"	"	"	"
t_{PLH}	3003 (Fig. 4)	87	IN	OUT					"							"	1A to 1Y	"	"	"	"	"	"	"
		88			IN	OUT			"							"	2A to 2Y	"	"	"	"	"	"	"
		89					IN	OUT	"							"	3A to 3Y	"	"	"	"	"	"	"
		90							"	OUT	IN					"	4A to 4Y	"	"	"	"	"	"	"
		91							"			OUT	IN			"	5A to 5Y	"	"	"	"	"	"	"
		92							"					OUT	IN	"	6A to 6Y	"	"	"	"	"	"	"

See footnotes at end of table.

TABLE III. Group A inspection for device type 02 - Continued.

Symbol	MIL-STD-883 method	Case	Terminal conditions 1/														Measured terminal	Test limits						Unit
		2	2	3	4	6	8	9	10	12	13	14	16	18	19	20		Subgroup 9		Subgroup 10		Subgroup 11		
		C	1	2	3	4	5	6	7	8	9	10	11	12	13	14		T_C = +25°C		T_C = +125°C		T_C = -55°C		
		Test no.	1A	1Y	2A	2Y	3A	3Y	GND	4Y	4A	5Y	5A	6Y	6A	V_{CC}		Min	Max	Min	Max	Min	Max	
t_{THL}	3004 (Fig. 4)	93	IN	OUT					"							4.5 V	1Y	3	15	3	20	3	15	ns
		94			IN	OUT			"							"	2Y	"	"	"	"	"	"	"
		95					IN	OUT	"							"	3Y	"	"	"	"	"	"	"
		96							"	OUT	IN					"	4Y	"	"	"	"	"	"	"
		97							"			OUT	IN			"	5Y	"	"	"	"	"	"	"
		98							"					OUT	IN	"	6Y	"	"	"	"	"	"	"
t_{TLH}	3004 (Fig. 4)	99	IN	OUT					"							"	1Y	"	"	"	"	"	"	"
		100			IN	OUT			"							"	2Y	"	"	"	"	"	"	"
		101					IN	OUT	"							"	3Y	"	"	"	"	"	"	"
		102							"	OUT	IN					"	4Y	"	"	"	"	"	"	"
		103							"			OUT	IN			"	5Y	"	"	"	"	"	"	"
		104							"					OUT	IN	"	6Y	"	"	"	"	"	"	"

See footnotes at end of table.

TABLE III. Group A inspection for device type 03.

Symbol	MIL-STD-883 method	Cases 2 and 3	Terminal conditions 1/																				Measured terminal	Test limits						Unit
			1	2	3	4	5	6	7	8	9	10	11	12	13	14	15	16	17	18	19	20		Subgroup 1 T_C = +25°C		Subgroup 2 T_C = +125°C		Subgroup 3 T_C = -55°C		
		Test no.	1G	1A1	2Y4	1A2	2Y3	1A3	2Y2	1A4	2Y1	GND	2A1	1Y4	2A2	1Y3	2A3	1Y2	2A4	1Y1	2G	V_{CC}		Min	Max	Min	Max	Min	Max	
V_{IC} (pos)		1	1 mA									OPEN										GND	1G	1/	1.5					V
		2		1 mA								"										"	1A1	"	"					"
		3				1 mA						"										"	1A2	"	"					"
		4						1 mA				"										"	1A3	"	"					"
		5								1 mA		"										"	1A4	"	"					"
		6										"	1 mA									"	2A1	"	"					"
		7										"			1 mA							"	2A2	"	"					"
		8										"					1 mA					"	2A3	"	"					"
		9										"							1 mA			"	2A4	"	"					"
		10										"									1 mA	"	2G	"	"					"
V_{IC} (neg)		11	-1 mA									GND										OPEN	1G		-1.5					"
		12		-1 mA								"										"	1A1		"					"
		13				-1 mA						"										"	1A2		"					"
		14						-1 mA				"										"	1A3		"					"
		15								-1 mA		"										"	1A4		"					"
		16										"	-1 mA									"	2A1		"					"
		17										"			-1 mA							"	2A2		"					"
		18										"					-1 mA					"	2A3		"					"
		19										"							-1 mA			"	2A4		"					"
		20										"									-1 mA	"	2G		"					"
I_{CC}	3005	21	GND	GND		GND		GND		GND		"	GND		GND		GND		GND		GND	6 V	V_{CC}		10.2		20			μA
I_{CC}	3005	22	GND	6 V		6 V		6 V		6 V		"	6 V		6 V		6 V		6 V		"	"	"		10.2		20			"
I_{CCZ}		23	5 V	5 V		6 V		6 V		6 V		"	GND		GND		GND		GND		"	"	"		10.1		10			"
		24	GND	GND		GND		GND		GND		"	6 V		6 V		6 V		6 V		6 V	"	"		10.1		10			"
V_{OH3}	3006	25	1.2 V	1.2 V								"										5 V	1Y1	5.95		5.95		5.95		V
		26	"			1.2 V						"						-20 μA		-20 μA		"	1Y2	"		"		"		"
		27	"					1.2 V				"				-20 μA						"	1Y3	"		"		"		"
		28	"							1.2 V		"		-20 μA								"	1Y4	"		"		"		"
		29									-20 μA	"	1.2 V								1.2 V	"	2Y1	"		"		"		"
		30							-20 μA			"			1.2 V						"	"	2Y2	"		"		"		"
		31					-20 μA					"					1.2 V				"	"	2Y3	"		"		"		"
		32			-20 μA							"							1.2 V		"	"	2Y4	"		"		"		"
V_{OH5}	3006	33	1.2 V	1.2 V								"										"	1Y1	5.43		5.2		5.43		"
		34	"			1.2 V						"						-7.8 mA		-7.8 mA		"	1Y2	"		"		"		"
		35	"					1.2 V				"				-7.8 mA						"	1Y3	"		"		"		"
		36	"							1.2 V		"		-7.8 mA								"	1Y4	"		"		"		"
		37									-7.8 mA	"	1.2 V								1.2 V	"	2Y1	"		"		"		"
		38							-7.8 mA			"			1.2 V						"	"	2Y2	"		"		"		"
		39					-7.8 mA					"					1.2 V				"	"	2Y3	"		"		"		"
		40			-7.8 mA							"							1.2 V		"	"	2Y4	"		"		"		"
V_{OL3}	3007	41	1.2 V	4.2 V								"										3 V	1Y1		0.35		0.35		0.35	"
		42	"			4.2 V						"						20 μA		20 μA		"	1Y2		"		"		"	"
		43	"					4.2 V				"				20 μA						"	1Y3		"		"		"	"
		44	"							4.2 V		"	4.2 V								1.2 V	"	2Y1		"		"		"	"
		45									20 μA	"			4.2 V						"	"	2Y2		"		"		"	"
		46							20 μA			"					4.2 V				"	"	2Y3		"		"		"	"
		47					20 μA					"							4.2 V		"	"	2Y4		"		"		"	"
		48			20 μA							"																		

See footnotes at end of table.

TABLE III. Group A inspection for device type 03 - Continued.

Symbol	MIL-STD-883 method	Cases 2 and R	Terminal conditions 1/																				Measured terminal	Test limits						Unit
			1	2	3	4	5	6	7	8	9	10	11	12	13	14	15	16	17	18	19	20		Subgroup 1 T_C = +25°C		Subgroup 2 T_C = +125°C		Subgroup 3 T_C = -55°C		
		Test no.	1G	1A1	2Y4	1A2	2Y3	1A3	2Y2	1A4	2Y1	GND	2A1	1Y4	2A2	1Y3	2A3	1Y2	2A4	1Y1	2G	V_{CC}		Min	Max	Min	Max	Min	Max	
V_{OLS}	3007	49	1.2 V	4.2 V								GND								7.8 mA		6 V	1Y1		0.26		0.4		0.26	V
		50	"			4.2 V						"						7.8 mA				"	1Y2		"		"		"	"
		51	"					4.2 V				"				7.8 mA						"	1Y3		"		"		"	"
		52	"							4.2 V		"		7.8 mA								"	1Y4		"		"		"	"
		53									7.8 mA	"	4.2 V								1.2 V	"	2Y1		"		"		"	"
		54							7.8 mA			"			4.2 V						"	"	2Y2		"		"		"	"
		55					7.8 mA					"					4.2 V				"	"	2Y3		"		"		"	"
		56			7.8 mA							"							4.2 V		"	"	2Y4		"		"		"	"
I_{OZH}		57	9/	9/								"								6 V		"	1Y1		0.2		2.0			μA
		58	"			9/						"						6 V				"	1Y2		"		"			"
		59	"					9/				"				6 V						"	1Y3		"		"			"
		60	"							9/		"		6 V								"	1Y4		"		"			"
		61									6 V	"	9/								9/	"	2Y1		"		"			"
		62							6 V			"			9/						"	"	2Y2		"		"			"
		63					6 V					"					9/				"	"	2Y3		"		"			"
		64			6 V							"							9/		"	"	2Y4		"		"			"
I_{OZL}		65	9/	9/								"								GND		"	1Y1		-0.2		-2.0			"
		66	"			9/						"						GND				"	1Y2		"		"			"
		67	"					9/				"				GND						"	1Y3		"		"			"
		68	"							9/		"		GND								"	1Y4		"		"			"
		69									GND	"	9/								9/	"	2Y1		"		"			"
		70							GND			"			9/						"	"	2Y2		"		"			"
		71					GND					"					9/				"	"	2Y3		"		"			"
		72			GND							"							9/		"	"	2Y4		"		"			"
I_{IH}	3010	73	6 V	GND		GND		GND		GND		"	GND		GND		GND		GND		GND	"	1G		.05		0.1			"
		74	GND	6 V		GND		"		"		"	"		"		"		"		"	"	1A1		"		"			"
		75	"	GND		6 V		"		"		"	"		"		"		"		"	"	1A2		"		"			"
		76	"	"		GND		6 V		"		"	"		"		"		"		"	"	1A3		"		"			"
		77	"	"		"		GND		6 V		"	"		"		"		"		"	"	1A4		"		"			"
		78	"	"		"		"		GND		"	6 V		"		"		"		"	"	2A1		"		"			"
		79	"	"		"		"		"		"	GND		6 V		"		"		"	"	2A2		"		"			"
		80	"	"		"		"		"		"	"		GND		6 V		"		"	"	2A3		"		"			"
		81	"	"		"		"		"		"	"		"		GND		6 V		"	"	2A4		"		"			"
		82	"	"		"		"		"		"	"		"		GND		GND		6 V	"	2G		"		"			"
I_{IL}	3009	83	"	6 V		6 V		6 V		6 V		"	6 V		6 V		6 V		6 V		6 V	"	1G		.05		0.1			"
		84	6 V	GND		6 V		"		"		"	"		"		"		"		"	"	1A1		"		"			"
		85	"	6 V		GND		"		"		"	"		"		"		"		"	"	1A2		"		"			"
		86	"	"		6 V		GND		"		"	"		"		"		"		"	"	1A3		"		"			"
		87	"	"		"		6 V		GND		"	"		"		"		"		"	"	1A4		"		"			"
		88	"	"		"		"		6 V		"	GND		"		"		"		"	"	2A1		"		"			"
		89	"	"		"		"		"		"	6 V		GND		"		"		"	"	2A2		"		"			"
		90	"	"		"		"		"		"	"		6 V		GND		"		"	"	2A3		"		"			"
		91	"	"		"		"		"		"	"		"		6 V		GND		"	"	2A4		"		"			"
		92	"	"		"		"		"		"	"		"		6 V		6 V		GND	"	2G		"		"			"
I_{OS4}	3011	93	GND	GND		"		GND		GND		"	GND		GND		GND		GND	GND		4 V	1Y1	10	-135	10	135	10	-135	mA
		94	"	"		"		"		"		"	"		"		"	GND	"			"	1Y2	"	"	"	"	"	"	"
		95	"	"		"		"		"		"	"		"	GND	"		"			"	1Y3	"	"	"	"	"	"	"
		96	"	"		"		"		"		"	"	GND	"		"		"			"	1Y4	"	"	"	"	"	"	"
		97		"		"		"		"	GND	"	"		"		"		"		GND	"	2Y1	"	"	"	"	"	"	"
		98		"		"		"	GND	"		"	"		"		"		"		"	"	2Y2	"	"	"	"	"	"	"
		99		"		"	GND	"		"		"	"		"		"		"		"	"	2Y3	"	"	"	"	"	"	"
		100		"	GND	"		"		"		"	"		"		"		"		"	"	2Y4	"	"	"	"	"	"	"

See footnotes at end of table.

TABLE III. Group A inspection for device type 03 - Continued.

Symbol	MIL-STD-883 method	Cases 2 and A	Terminal conditions 1/																				Measured terminal	Test limits						Unit
			1	2	3	4	5	6	7	8	9	10	11	12	13	14	15	16	17	18	19	20		Subgroup 4 T_C = +25°C						
		Test no.	1G	1A1	2Y4	1A2	2Y3	1A3	2Y2	1A4	2Y1	GND	2A1	1Y4	2A2	1Y3	2A3	1Y2	2A4	1Y1	2G	V_{CC}		Min	Max					
C_I	3012	101	2/									GND										GND	1G		10					pF
		102		2/								"										"	1A1		"					"
		103				2/						"										"	1A2		"					"
		104						2/				"										"	1A3		"					"
		105								2/		"										"	1A4		"					"
		106										"	2/									"	2A1		"					"
		107										"			2/							"	2A2		"					"
		108										"					2/					"	2A3		"					"
		109										"							2/			"	2A4		"					"
		110										"									2/	"	2G		"					"
C_O		111			2/		2/		2/		2/	"									6 V	6 V	2Y's		20					"
		112										"		2/		2/		2/		2/		6 V	1Y's		20					"
																								Subgroup 7 T_C = +25°C		Subgroup 8 T_C = +125°C		Subgroup 9 T_C = -55°C		
																								Min	Max	Min	Max	Min	Max	
Truth table	3014 6/	113	B	B	H	B	H	B	H	B	H	GND	B	H	B	H	B	H	B	H	B	4.5 V	7/				•			
		114	B	A	L	A	L	A	L	A	L	GND	A	L	A	L	A	L	A	L	B	4.5 V	7/							
																								Subgroup 9 T_C = +25°C		Subgroup 10 T_C = +125°C		Subgroup 11 T_C = -55°C		
																								Min	Max	Min	Max	Min	Max	
t_{PHL}	3003 (Fig. 4)	115	GND	IN								GND										4.5 V	1A1 to 1Y1	5	19	5	23	5	19	ns
		116	"			IN						"						OUT				"	1A2 to 1Y2	"	"	"	"	"	"	"
		117	"					IN				"				OUT						"	1A3 to 1Y3	"	"	"	"	"	"	"
		118	"							IN		"		OUT								"	1A4 to 1Y4	"	"	"	"	"	"	"
		119									OUT	"	IN								GND	"	2A1 to 2Y1	"	"	"	"	"	"	"
		120										"			IN						"	"	2A2 to 2Y2	"	"	"	"	"	"	"
		121					OUT					"					IN				"	"	2A3 to 2Y3	"	"	"	"	"	"	"
		122			OUT				OUT			"							IN		"	"	2A4 to 2Y4	"	"	"	"	"	"	"
t_{PLH}	3003 (Fig. 4)	123	GND	IN								"								OUT		"	1A1 to 1Y1	"	"	"	"	"	"	"
		124	"			IN						"						OUT				"	1A2 to 1Y2	"	"	"	"	"	"	"
		125	"					IN				"				OUT						"	1A3 to 1Y3	"	"	"	"	"	"	"
		126	"							IN		"		OUT								"	1A4 to 1Y4	"	"	"	"	"	"	"
		127									OUT	"	IN								GND	"	2A1 to 2Y1	"	"	"	"	"	"	"
		128							OUT			"			IN						"	"	2A2 to 2Y2	"	"	"	"	"	"	"
		129					OUT					"					IN				"	"	2A3 to 2Y3	"	"	"	"	"	"	"
		130			OUT							"							IN		"	"	2A4 to 2Y4	"	"	"	"	"	"	"
t_{PZL}	3003 (Fig. 4)	131	IN	4.5 V								"								OUT		"	1G to 1Y1	"	25	"	35	"	25	"
		132	"			4.5 V						"						OUT				"	1G to 1Y2	"	"	"	"	"	"	"
		133	"					4.5 V				"				OUT						"	1G to 1Y3	"	"	"	"	"	"	"
		134	"							4.5 V		"		OUT								"	1G to 1Y4	"	"	"	"	"	"	"
		135									OUT	"	4.5 V								2G	"	2G to 2Y1	"	"	"	"	"	"	"
		136							OUT			"			4.5 V						"	"	2G to 2Y2	"	"	"	"	"	"	"
		137					OUT					"					4.5 V				"	"	2G to 2Y3	"	"	"	"	"	"	"
		138			OUT							"							4.5 V		"	"	2G to 2Y4	"	"	"	"	"	"	"

See footnotes at end of table.

TABLE III. Group A inspection for device type 03 - Continued.

Symbol	MIL-STD-883 method	Cases 2 and R	Terminal conditions 1/																				Measured terminal	Test limits						Unit
			1	2	3	4	5	6	7	8	9	10	11	12	13	14	15	16	17	18	19	20		Subgroup 1 T_C = +25°C		Subgroup 2 T_C = +125°C		Subgroup 3 T_C = -55°C		
		Test no.	1G	1A1	2Y4	1A2	2Y3	1A3	2Y2	1A4	2Y1	GND	2A1	1Y4	2A2	1Y3	2A3	1Y2	2A4	1Y1	2G	V_{CC}		Min	Max	Min	Max	Min	Max	
t_{PZH}	3003 (Fig. 4)	139	1A	GND		GND						GND								OUT		4.5 V	1G to 1Y1	5	25	5	35	5	26	ns
		140	"					GND				"						OUT				"	1G to 1Y2	"	"	"	"	"	"	"
		141	"							GND		"				OUT						"	1G to 1Y3	"	"	"	"	"	"	"
		142	"									"		OUT								"	1G to 1Y4	"	"	"	"	"	"	"
		143									OUT	"	GND								IN	"	2G to 2Y1	"	"	"	"	"	"	"
		144							OUT			"			GND						"	"	2G to 2Y2	"	"	"	"	"	"	"
		145					OUT					"					GND				"	"	2G to 2Y3	"	"	"	"	"	"	"
		146			OUT							"							GND		"	"	2G to 2Y4	"	"	"	"	"	"	"
t_{PLZ}	3003 (Fig. 4)	147	1A	4.5 V		4.5 V						"								OUT		"	1G to 1Y1	"	"	"	"	"	"	"
		148	"					4.5 V				"						OUT				"	1G to 1Y2	"	"	"	"	"	"	"
		149	"							4.5 V		"				OUT						"	1G to 1Y3	"	"	"	"	"	"	"
		150	"								OUT	"		OUT								"	1G to 1Y4	"	"	"	"	"	"	"
		151										"	4.5 V								IN	"	2G to 2Y1	"	"	"	"	"	"	"
		152							OUT			"			4.5 V						"	"	2G to 2Y2	"	"	"	"	"	"	"
		153					OUT					"					4.5 V				"	"	2G to 2Y3	"	"	"	"	"	"	"
		154			OUT							"							4.5 V		"	"	2G to 2Y4	"	"	"	"	"	"	"
t_{PHZ}	3003 (Fig. 4)	155	IN	GND		GND						"								OUT		"	1G to 1Y1	"	"	"	"	"	"	"
		156	"					GND				"						OUT				"	1G to 1Y2	"	"	"	"	"	"	"
		157	"							GND		"				OUT						"	1G to 1Y3	"	"	"	"	"	"	"
		158	"								OUT	"		OUT								"	1G to 1Y4	"	"	"	"	"	"	"
		159										"	GND								IN	"	2G to 2Y1	"	"	"	"	"	"	"
		160							OUT			"			GND						"	"	2G to 2Y2	"	"	"	"	"	"	"
		161					OUT					"					GND				"	"	2G to 2Y3	"	"	"	"	"	"	"
		162			OUT							"							GND		"	"	2G to 2Y4	"	"	"	"	"	"	"
t_{THL}	3003 (Fig. 4)	163	GND	IN		IN						"								OUT		"	1Y1	2	12	2	16	2	12	ns
		164	"					IN				"						OUT				"	1Y2	"	"	"	"	"	"	"
		165	"							IN		"				OUT						"	1Y3	"	"	"	"	"	"	"
		166	"								OUT	"		OUT								"	1Y4	"	"	"	"	"	"	"
		167										"	IN								GND	"	2Y1	"	"	"	"	"	"	"
		168							OUT			"			IN						"	"	2Y2	"	"	"	"	"	"	"
		169					OUT					"					IN				"	"	2Y3	"	"	"	"	"	"	"
		170			OUT							"							IN		"	"	2Y4	"	"	"	"	"	"	"
t_{TLH}	3003 (Fig. 4)	171	GND	IN		IN						"								OUT		"	1Y1	"	"	"	"	"	"	"
		172	"					IN				"						OUT				"	1Y2	"	"	"	"	"	"	"
		173	"							IN		"				OUT						"	1Y3	"	"	"	"	"	"	"
		174	"								OUT	"		OUT								"	1Y4	"	"	"	"	"	"	"
		175										"	IN								GND	"	2Y1	"	"	"	"	"	"	"
		176							OUT			"			IN						"	"	2Y2	"	"	"	"	"	"	"
		177					OUT					"					IN				"	"	2Y3	"	"	"	"	"	"	"
		178			OUT							"							IN		"	"	2Y4	"	"	"	"	"	"	"

See footnotes at end of table.

TABLE III. Group A inspection for device type 04.

Symbol	MIL-STD-883 method	Cases 2 and R	Terminal conditions 1/																				Measured terminal	Test limits						Unit
			1	2	3	4	5	6	7	8	9	10	11	12	13	14	15	16	17	18	19	20		Subgroup 1 T_C = +25°C		Subgroup 2 T_C = +125°C		Subgroup 3 T_C = -55°C		
		Test no.	1G	1A1	2Y4	1A2	2Y3	1A3	2Y2	1A4	2Y1	GND	2A1	1Y4	2A2	1Y3	2A3	1Y2	2A4	1Y1	2G	V_{CC}		Min	Max	Min	Max	Min	Max	
V_{IC} (pos)		1	1 mA									OPEN										GND	$\overline{1G}$	1/	1.5					V
		2		1 mA								"										"	1A1	"	"					"
		3				1 mA						"										"	1A2	"	"					"
		4						1 mA				"										"	1A3	"	"					"
		5								1 mA		"										"	1A4	"	"					"
		6										"	1 mA									"	2A1	"	"					"
		7										"			1 mA							"	2A2	"	"					"
		8										"					1 mA					"	2A3	"	"					"
		9										"							1 mA			"	2A4	"	"					"
		10										"									1 mA	"	2G	"	"					"
V_{IC} (neg)		11	-1 mA									GND										OPEN	$\overline{1G}$		-1.5					"
		12		-1 mA								"										"	1A1		"					"
		13				-1 mA						"										"	1A2		"					"
		14						-1 mA				"										"	1A3		"					"
		15								-1 mA		"										"	1A4		"					"
		16										"	-1 mA									"	2A1		"					"
		17										"			-1 mA							"	2A2		"					"
		18										"					-1 mA					"	2A3		"					"
		19										"							-1 mA			"	2A4		"					"
		20										"									-1 mA	"	2G		"					"
I_{CCH}	3005	21	GND	6 V		6 V		6 V		6 V		"	6 V		6 V		6 V		6 V		6 V	6 V	V_{CC}		0.2		20			μA
I_{CCL}	3005	22	GND	GND		GND		GND		GND		"	GND		GND		GND		GND		"	"	"		0.2		20			"
I_{CCZ}		23	6 V	6 V		6 V		6 V		6 V		"	GND		GND		GND		GND		"	"	"		0.1		10			"
		24	GND	GND		GND		GND		GND		"	6 V		6 V		6 V		6 V		GND	"	"		0.1		10			"
V_{OH3}	3006	25	1.2 V	4.2 V								"								-20 μA		"	1Y1	5.95		5.95		5.95		V
		26	"			4.2 V						"						-20 μA				"	1Y2	"		"		"		"
		27	"					4.2 V				"				-20 μA						"	1Y3	"		"		"		"
		28	"							4.2 V		"		-20 μA								"	1Y4	"		"		"		"
		29									-20 μA	"	4.2 V								4.2 V	"	2Y1	"		"		"		"
		30							-20 μA			"			4.2 V						"	"	2Y2	"		"		"		"
		31					-20 μA					"					4.2 V				"	"	2Y3	"		"		"		"
		32			-20 μA							"							4.2 V		"	"	2Y4	"		"		"		"
V_{OH5}	3006	33	1.2 V	4.2 V								"								-7.8 mA		"	1Y1	5.48		5.2		5.48		"
		34	"			4.2 V						"						-7.8 mA				"	1Y2	"		"		"		"
		35	"					4.2 V				"				-7.8 mA						"	1Y3	"		"		"		"
		36	"							4.2 V		"		-7.8 mA								"	1Y4	"		"		"		"
		37									-7.8 mA	"	4.2 V								4.2 V	"	2Y1	"		"		"		"
		38							-7.8 mA			"			4.2 V						"	"	2Y2	"		"		"		"
		39					-7.8 mA					"					4.2 V				"	"	2Y3	"		"		"		"
		40			-7.8 mA							"							4.2 V		"	"	2Y4	"		"		"		"
V_{OL3}	3007	41	1.2 V	1.2 V								"								20 μA		"	1Y1		0.05		0.05		0.05	"
		42	"			1.2 V						"						20 μA				"	1Y2		"		"		"	"
		43	"					1.2 V				"				20 μA						"	1Y3		"		"		"	"
		44	"							1.2 V		"		20 μA								"	1Y4		"		"		"	"
		45									20 μA	"	1.2 V								1.2 V	"	2Y1		"		"		"	"
		46							20 μA			"			1.2 V						"	"	2Y2		"		"		"	"
		47					20 μA					"					1.2 V				"	"	2Y3		"		"		"	"
		48			20 μA							"							1.2 V		"	"	2Y4		"		"		"	"

See footnotes at end of table.

TABLE III. Group A Inspection for device type 04 - Continued.

Symbol	MIL-STD-883 method	Cases 2 and H	Terminal conditions 1/																					Measured terminal	Test limits						Unit
			1	2	3	4	5	6	7	8	9	10	11	12	13	14	15	16	17	18	19	20			Subgroup 1 T_C = +25°C		Subgroup 2 T_C = +125°C		Subgroup 3 T_C = -55°C		
		Test no.	1G	1A1	2Y4	1A2	2Y3	1A3	2Y2	1A4	2Y1	GND	2A1	1Y4	2A2	1Y3	2A3	1Y2	2A4	1Y1	2G	V_{CC}			Min	Max	Min	Max	Min	Max	
V_{OLS}	3007	49	1.2 V	1.2 V								GND								7.8 mA		6 V	1Y1		0.26		0.4		0.26	V
		50	"			1.2 V						"						7.8 mA				"	1Y2		"		"		"	"
		51	"					1.2 V				"				7.8 mA						"	1Y3		"		"		"	"
		52	"							1.2 V		"		7.8 mA								"	1Y4		"		"		"	"
		53									7.8 mA	"	1.2 V								4.2 V	"	2Y1		"		"		"	"
		54							7.8 mA			"			1.2 V						"	"	2Y2		"		"		"	"
		55					7.8 mA					"					1.2 V				"	"	2Y3		"		"		"	"
		56			7.8 mA							"							1.2 V		"	"	2Y4		"		"		"	"
I_{OZH}		57	9/	9/								"										"	1Y1		0.2		2.0			μA
		58	"			9/						"						6 V		6 V		"	1Y2		"		"			"
		59	"					9/				"				6 V						"	1Y3		"		"			"
		60	"							9/		"		6 V								"	1Y4		"		"			"
		61									6 V	"	9/								9/	"	2Y1		"		"			"
		62							6 V			"			9/						"	"	2Y2		"		"			"
		63					6 V					"					9/				"	"	2Y3		"		"			"
		64			6 V							"							9/		"	"	2Y4		"		"			"
I_{OZL}		65	9/	9/								"								GND		"	1Y1		-0.2		-2.0			"
		66	"			9/						"						GND				"	1Y2		"		"			"
		67	"					9/				"				GND						"	1Y3		"		"			"
		68	"							9/		"		GND								"	1Y4		"		"			"
		69									GND	"	9/								9/	"	2Y1		"		"			"
		70							GND			"			9/						"	"	2Y2		"		"			"
		71					GND					"					9/				"	"	2Y3		"		"			"
		72			GND							"							9/		"	"	2Y4		"		"			"
I_{IH}	3010	73	6 V	GND		GND		GND		GND		"	GND		GND		GND		GND		GND	"	1G		.05		0.1			"
		74	GND	6 V		GND		"		"		"	"		"		"		"		"	"	1A1		"		"			"
		75	"	GND		6 V		"		"		"	"		"		"		"		"	"	1A2		"		"			"
		76	"	"		GND		6 V		"		"	"		"		"		"		"	"	1A3		"		"			"
		77	"	"		"		GND		6 V		"	"		"		"		"		"	"	1A4		"		"			"
		78	"	"		"		"		GND		"	6 V		"		"		"		"	"	2A1		"		"			"
		79	"	"		"		"		"		"	GND		6 V		"		"		"	"	2A2		"		"			"
		80	"	"		"		"		"		"	"		GND		6 V		"		"	"	2A3		"		"			"
		81	"	"		"		"		"		"	"		"		GND		6 V		"	"	2A4		"		"			"
		82	"	"		"		"		"		"	"		"		GND		GND		6 V	"	2G		"		"			"
I_{IL}	3009	83	"	6 V		6 V		6 V		6 V		"	6 V		6 V		6 V		6 V		6 V	"	1G		-.05		-0.1			"
		84	6 V	GND		6 V		"		"		"	"		"		"		"		"	"	1A1		"		"			"
		85		6 V		GND		"		"		"	"		"		"		"		"	"	1A2		"		"			"
		86		"		6 V		GND		"		"	"		"		"		"		"	"	1A3		"		"			"
		87		"		"		6 V		GND		"	"		"		"		"		"	"	1A4		"		"			"
		88		"		"		"		6 V		"	GND		"		"		"		"	"	2A1		"		"			"
		89		"		"		"		"		"	6 V		GND		"		"		"	"	2A2		"		"			"
		90		"		"		"		"		"	"		6 V		GND		"		"	"	2A3		"		"			"
		91		"		"		"		"		"	"		"		6 V		GND		"	"	2A4		"		"			"
		92		"		"		"		"		"	"		"		6 V		6 V		GND	"	2G		"		"			"
I_{OS4}	3009	93	GND	4 V		4 V		4 V		4 V		"	4 V		4 V		4 V		4 V	GND		4 V	1Y1	-13	135	10	-135	-13	-135	mA
		94	"	"		"		"		"		"	"		"		"	GND	"			"	1Y2	"	"	"	"	"	"	"
		95	"	"		"		"		"		"	"		"	GND	"		"			"	1Y3	"	"	"	"	"	"	"
		96	"	"		"		"		"		"	"	GND	"		"		"			"	1Y4	"	"	"	"	"	"	"
		97		"		"		"		"	GND	"	"		"		"		"		4 V	"	2Y1	"	"	"	"	"	"	"
		98		"		"		"	GND	"		"	"		"		"		"		"	"	2Y2	"	"	"	"	"	"	"
		99		"		"	GND	"		"		"	"		"		"		"		"	"	2Y3	"	"	"	"	"	"	"
		100		"	GND	"		"		"		"	"		"		"		"		"	"	2Y4	"	"	"	"	"	"	"

See footnotes at end of table.

TABLE III. Group A inspection for device type 04 - Continued.

Symbol	MIL-STD-883 method	Cases 2 and 4	Terminal conditions 1/																				Measured terminal	Test limits						Unit
		Test no.	1	2	3	4	5	6	7	8	9	10	11	12	13	14	15	16	17	18	19	20		Subgroup 4 T_C = +25°C						
			1G	1A1	2Y4	1A2	2Y3	1A3	2Y2	1A4	2Y1	GND	2A1	1Y4	2A2	1Y3	2A3	1Y2	2A4	1Y1	2G	V_{CC}		Min	Max					
C_I	3012	101	2/									GND										GND	1G		10					pF
		102		2/								"										"	1A1		"					"
		103				2/						"										"	1A2		"					"
		104						2/				"										"	1A3		"					"
		105								2/		"										"	1A4		"					"
		106										"	2/									"	2A1		"					"
		107										"			2/							"	2A2		"					"
		108										"					2/					"	2A3		"					"
		109										"							2/			"	2A4		"					"
		110										"									2/	"	2G		"					"
C_O		111	6 V									"		2/		2/		2/		2/	6 V	6 V	1Y's		20					"
		112	GND		2/		2/		2/		2/	"									GND	6 V	2Y's		20					"
																								Subgroup 7 T_C = +25°C		Subgroup 8 T_C = +125°C		Subgroup 9 T_C = -55°C		
																								Min	Max	Min	Max	Min	Max	
Truth table	3014	113	B	B	L	B	L	B	L	B	L	"	B	L	B	L	B	L	B	L	A	4.5 V	7/							
	6/	114	B	A	H	A	H	A	H	A	H	"	A	H	A	H	A	H	A	H	A	4.5 V	7/							
																								Subgroup 9 T_C = +25°C		Subgroup 10 T_C = +125°C		Subgroup 11 T_C = -55°C		
																								Min	Max	Min	Max	Min	Max	
t_{PHL}	3003 (Fig. 4)	115	GND	IN								GND										4.5 V	1A1 to 1Y1	5	20	5	27	5	20	ns
		116	"			IN						"						OUT				"	1A2 to 1Y2	"	"	"	"	"	"	"
		117	"					IN				"				OUT						"	1A3 to 1Y3	"	"	"	"	"	"	"
		118	"							IN		"		OUT								"	1A4 to 1Y4	"	"	"	"	"	"	"
		119									OUT	"	IN								4.5 V	"	2A1 to 2Y1	"	"	"	"	"	"	"
		120							OUT			"			IN						"	"	2A2 to 2Y2	"	"	"	"	"	"	"
		121					OUT					"					IN				"	"	2A3 to 2Y3	"	"	"	"	"	"	"
		122			OUT							"							IN		"	"	2A4 to 2Y4	"	"	"	"	"	"	"
t_{PLH}	3003 (Fig. 4)	123	GND	IN								"										"	1A1 to 1Y1	"	"	"	"	"	"	"
		124	"			IN						"						OUT				"	1A2 to 1Y2	"	"	"	"	"	"	"
		125	"					IN				"				OUT						"	1A3 to 1Y3	"	"	"	"	"	"	"
		126	"							IN		"		OUT								"	1A4 to 1Y4	"	"	"	"	"	"	"
		127									OUT	"	IN								4.5 V	"	2A1 to 2Y1	"	"	"	"	"	"	"
		128							OUT			"			IN						"	"	2A2 to 2Y2	"	"	"	"	"	"	"
		129					OUT					"					IN				"	"	2A3 to 2Y3	"	"	"	"	"	"	"
		130			OUT							"							IN		"	"	2A4 to 2Y4	"	"	"	"	"	"	"
t_{PZH}	3003 (Fig. 4)	131	IN	4.5 V								"										"	1G to 1Y1	"	26	"	35	"	26	"
		132	"			4.5 V						"						OUT				"	1G to 1Y2	"	"	"	"	"	"	"
		133	"					4.5 V				"				OUT						"	1G to 1Y3	"	"	"	"	"	"	"
		134	"							4.5 V		"		OUT								"	1G to 1Y4	"	"	"	"	"	"	"
		135									OUT	"	4.5 V								IN	"	2G to 2Y1	"	"	"	"	"	"	"
		136							OUT			"			4.5 V						"	"	2G to 2Y2	"	"	"	"	"	"	"
		137					OUT					"					4.5 V				"	"	2G to 2Y3	"	"	"	"	"	"	"
		138			OUT							"							4.5 V		"	"	2G to 2Y4	"	"	"	"	"	"	"

See footnotes at end of table.

TABLE III. Group A inspection for device type 04 - Continued.

Symbol	MIL-STD-883 method	Cases 2 and R	Terminal conditions 1/																				Measured terminal	Test limits						Unit
			1	2	3	4	5	6	7	8	9	10	11	12	13	14	15	16	17	18	19	20		Subgroup 9 T_C = +25°C		Subgroup 10 T_C = +125°C		Subgroup 11 T_C = -55°C		
		Test no.	1G	1A1	2Y4	1A2	2Y3	1A3	2Y2	1A4	2Y1	GND	2A1	1Y4	2A2	1Y3	2A3	1Y2	2A4	1Y1	2G	V_{CC}		Min	Max	Min	Max	Min	Max	
t_{PZL}	3003 (Fig. 4)	139	IN	GND		GND						GND								OUT		4.5 V	1G to 1Y1	5	26	5	35	5	26	ns
		140	"					GND				"						DUT				"	1G to 1Y2	"	"	"	"	"	"	"
		141	"							GND		"				OUT						"	1G to 1Y3	"	"	"	"	"	"	"
		142	"									"										"	1G to 1Y4	"	"	"	"	"	"	"
		143									OUT	"	GND	OUT							IN	"	2G to 2Y1	"	"	"	"	"	"	"
		144										"									"	"	2G to 2Y2	"	"	"	"	"	"	"
		145					OUT		DUT			"			GND						"	"	2G to 2Y3	"	"	"	"	"	"	"
		146			OUT							"					GND		GND		"	"	2G to 2Y4	"	"	"	"	"	"	"
t_{PHZ}	3003 (Fig. 4)	147	IN	4.5 V		4.5 V						"								OUT		"	1G to 1Y1	"	"	"	"	"	"	"
		148	"					4.5 V				"						OUT				"	1G to 1Y2	"	"	"	"	"	"	"
		149	"									"				OUT						"	1G to 1Y3	"	"	"	"	"	"	"
		150	"							4.5 V		"		DUT								"	1G to 1Y4	"	"	"	"	"	"	"
		151									OUT	"	4.5 V								IN	"	2G to 2Y1	"	"	"	"	"	"	"
		152							DUT			"			4.5 V						"	"	2G to 2Y2	"	"	"	"	"	"	"
		153					OUT					"					4.5 V				"	"	2G to 2Y3	"	"	"	"	"	"	"
		154			OUT							"							4.5 V		"	"	2G to 2Y4	"	"	"	"	"	"	"
t_{PLZ}	3003 (Fig. 4)	155	IN	GND		GND						"								OUT		"	1G to 1Y1	"	"	"	"	"	"	"
		156	"					GND				"						OUT				"	1G to 1Y2	"	"	"	"	"	"	"
		157	"									"				OUT						"	1G to 1Y3	"	"	"	"	"	"	"
		158	"							GND		"		OUT								"	1G to 1Y4	"	"	"	"	"	"	"
		159									OUT	"	GND								IN	"	2G to 2Y1	"	"	"	"	"	"	"
		160							DUT			"			GND						"	"	2G to 2Y2	"	"	"	"	"	"	"
		161					OUT					"					GND				"	"	2G to 2Y3	"	"	"	"	"	"	"
		162			OUT							"							GND		"	"	2G to 2Y4	"	"	"	"	"	"	"
t_{TLH}	3004 (Fig. 4)	163	GND	IN								"								OUT		"	1Y1	2	12	2	16	2	12	"
		164	"			IN						"						OUT				"	1Y2	"	"	"	"	"	"	"
		165	"					IN				"				OUT						"	1Y3	"	"	"	"	"	"	"
		166	"							IN		"		OUT								"	1Y4	"	"	"	"	"	"	"
		167									OUT	"	IN								4.5 V	"	2Y1	"	"	"	"	"	"	"
		168							DUT			"			IN						"	"	2Y2	"	"	"	"	"	"	"
		169					OUT					"					IN				"	"	2Y3	"	"	"	"	"	"	"
		170			OUT							"							IN		"	"	2Y4	"	"	"	"	"	"	"
t_{THL}	3004 (Fig. 4)	171	GND	IN								"								OUT		"	1Y1	"	"	"	"	"	"	"
		172	"			IN						"						OUT				"	1Y2	"	"	"	"	"	"	"
		173	"					IN				"				OUT						"	1Y3	"	"	"	"	"	"	"
		174	"							IN		"		OUT								"	1Y4	"	"	"	"	"	"	"
		175									OUT	"	IN								4.5 V	"	2Y1	"	"	"	"	"	"	"
		176							DUT			"			IN						"	"	2Y2	"	"	"	"	"	"	"
		177					OUT					"					IN				"	"	2Y3		"		"		"	"
		178			OUT							"							IN		"	"	2Y4		"		"		"	"

See footnotes at end of table.

TABLE III. Group A inspection for device type 05.

Symbol	MIL-STD-883 method	Cases 2 and R	Terminal conditions 1/																				Measured terminal	Test limits						Unit
			1	2	3	4	5	6	7	8	9	10	11	12	13	14	15	16	17	18	19	20		Subgroup 1 T_C = +25°C		Subgroup 2 T_C = +125°C		Subgroup 3 T_C = -55°C		
		Test no.	1G	1A1	2Y4	1A2	2Y3	1A3	2Y2	1A4	2Y1	GND	2A1	1Y4	2A2	1Y3	2A3	1Y2	2A4	1Y1	2G	V_{CC}		Min	Max	Min	Max	Min	Max	
V_{IC} (pos)		1	1 mA									OPEN										GND	1G	1/	1.5					V
		2		1 mA								"										"	1A1	"	"					"
		3				1 mA						"										"	1A2	"	"					"
		4						1 mA				"										"	1A3	"	"					"
		5								1 mA		"										"	1A4	"	"					"
		6										"	1 mA									"	2A1	"	"					"
		7										"			1 mA							"	2A2	"	"					"
		8										"					1 mA					"	2A3	"	"					"
		9										"							1 mA			"	2A4	"	"					"
		10										"									1 mA	"	2G	"	"					"
V_{IC} (neg)		11	-1 mA									GND										OPEN	1G		-1.5					"
		12		-1 mA								"										"	1A1		"					"
		13				-1 mA						"										"	1A2		"					"
		14						-1 mA				"										"	1A3		"					"
		15								-1 mA		"										"	1A4		"					"
		16										"	-1 mA									"	2A1		"					"
		17										"			-1 mA							"	2A2		"					"
		18										"					-1 mA					"	2A3		"					"
		19										"							-1 mA			"	2A4		"					"
		20										"									-1 mA	"	2G		"					"
I_{CCH}	3005	21	GND	6 V		6 V		6 V		6 V		"	6 V		6 V		6 V		6 V		5 V	6 V	V_{CC}		10.2		20			μA
I_{CCL}	3005	22	GND	GND		GND		GND		GND		"	GND		GND		GND		GND		GND	"	"		10.2		20			"
I_{CC2}		23	6 V	6 V		6 V		6 V		6 V		"	GND		GND		GND		GND		GND	"	"		.1		10			"
		24	GND	GND		GND		GND		GND		"	6 V		6 V		6 V		6 V		6 V	"	"		.1		10			"
V_{OH3}	3006	25	1.2 V	4.2 V								"								-20 μA		"	1Y1	5.95		5.95		5.95		V
		26	"			4.2 V						"						-20 μA				"	1Y2	"		"		"		"
		27	"					4.2 V				"				-20 μA						"	1Y3	"		"		"		"
		28	"							4.2 V		"		-20 μA								"	1Y4	"		"		"		"
		29									-20 μA	"	4.2 V								1.2 V	"	2Y1	"		"		"		"
		30							-20 μA			"			4.2 V						"	"	2Y2	"		"		"		"
		31					-20 μA					"					4.2 V				"	"	2Y3	"		"		"		"
		32			20 μA							"							4.2 V		"	"	2Y4	"		"		"		"
V_{OH5}	3006	33	1.2 V	4.2 V								"								-7.8 mA		"	1Y1	5.48		5.2		5.48		"
		34	"			4.2 V						"						-7.8 mA				"	1Y2	"		"		"		"
		35	"					4.2 V				"				-7.8 mA						"	1Y3	"		"		"		"
		36	"							4.2 V		"		7.8 mA								"	1Y4	"		"		"		"
		37									-7.8 mA	"	4.2 V								1.2 V	"	2Y1	"		"		"		"
		38							-7.8 mA			"			4.2 V						"	"	2Y2	"		"		"		"
		39					-7.8 mA					"					4.2 V				"	"	2Y3	"		"		"		"
		40			-7.8 mA							"							4.2 V		"	"	2Y4	"		"		"		"
V_{OL3}	3007	41	1.2 V	1.2 V								"								20 μA		"	1Y1		0.35		0.35		0.35	"
		42	"			1.2 V						"						20 μA				"	1Y2		"		"			"
		43	"					1.2 V				"				20 μA						"	1Y3		"		"			"
		44	"							1.2 V		"		20 μA								"	1Y4		"		"			"
		45									20 μA	"	1.2 V								1.2 V	"	2Y1		"		"			"
		46							20 μA			"			1.2 V						"	"	2Y2		"		"			"
		47					20 μA					"					1.2 V				"	"	2Y3		"		"			"
		48			20 μA							"							1.2 V		"	"	2Y4		"		"			"

See footnotes at end of table.

TABLE III. Group A inspection for device type 05 - Continued.

Symbol	MIL-STD-883 method	Cases 2 and R	Terminal conditions 1/																				Measured terminal	Test limits						Unit
			1	2	3	4	5	6	7	8	9	10	11	12	13	14	15	16	17	18	19	20		Subgroup 1 T_C = +25°C		Subgroup 2 T_C = +125°C		Subgroup 3 T_C = -55°C		
		Test no.	1$\overline{G}$	1A1	2Y4	1A2	2Y3	1A3	2Y2	1A4	2Y1	GND	2A1	1Y4	2A2	1Y3	2A3	1Y2	2A4	1Y1	2$\overline{G}$	V_{CC}		Min	Max	Min	Max	Min	Max	
V_{OLS}	3007	49	1.2 V	1.2 V								GND								7.8 mA		6 V	1Y1		0.26		0.4		0.26	V
		50	"			1.2 V						"						7.8 mA				"	1Y2		"		"		"	"
		51	"					1.2 V				"				7.8 mA						"	1Y3		"		"		"	"
		52	"							1.2 V		"		7.8 mA								"	1Y4		"		"		"	"
		53									7.8 mA	"	1.2 V								1.2 V	"	2Y1		"		"		"	"
		54							7.8 mA			"			1.2 V						"	"	2Y2		"		"		"	"
		55					7.8 mA					"					1.2 V				"	"	2Y3		"		"		"	"
		56			7.8 mA							"							1.2 V		"	"	2Y4		"		"		"	"
I_{OZH}		57	9/	9/								"										"	1Y1		0.2		2.0			μA
		58	"			9/						"								6 V		"	1Y2		"		"			"
		59	"					9/				"						6 V				"	1Y3		"		"			"
		60	"							9/		"		6 V								"	1Y4		"		"			"
		61									6 V	"	9/								9/	"	2Y1		"		"			"
		62							6 V			"			9/						"	"	2Y2		"		"			"
		63					6 V					"					9/				"	"	2Y3		"		"			"
		64			6 V							"							9/		"	"	2Y4		"		"			"
I_{OZL}		65	9/	9/								"										"	1Y1		-0.2		-2.0			"
		66	"			9/						"								GND		"	1Y2		"		"			"
		67	"					9/				"				GND		GND				"	1Y3		"		"			"
		68	"							9/		"		GND								"	1Y4		"		"			"
		69									GND	"	9/								9/	"	2Y1		"		"			"
		70							GND			"			9/						"	"	2Y2		"		"			"
		71					GND					"					9/				"	"	2Y3		"		"			"
		72			GND							"							9/		"	"	2Y4		"		"			"
I_{IH}	3010	73	6 V	GND		GND		GND		GND		"	GND		GND		GND/		GND		GND	"	1$\overline{G}$		.05		0.1			"
		74	GND	6 V		GND		"		"		"	"		"		"		"		"	"	1A1		"		"			"
		75	"	GND		6 V		"		"		"	"		"		"		"		"	"	1A2		"		"			"
		76	"	"		GND		6 V		"		"	"		"		"		"		"	"	1A3		"		"			"
		77	"	"		"		GND		6 V		"	"		"		"		"		"	"	1A4		"		"			"
		78	"	"		"		"		GND		"	6 V		"		"		"		"	"	2A1		"		"			"
		79	"	"		"		"		"		"	GND		6 V		"		"		"	"	2A2		"		"			"
		80	"	"		"		"		"		"	"		GND		6 V		"		"	"	2A3		"		"			"
		81	"	"		"		"		"		"	"		"		GND		6 V		"	"	2A4		"		"			"
		82	"	"		"		"		"		"	"		"		GND		GND		6 V	"	2$\overline{G}$		"		"			"
I_{IL}	3009	83	"	6 V		6 V		6 V		6 V		"	6 V		6 V		6 V		6 V		6 V	"	1$\overline{G}$		-.05		-0.1			"
		84	6 V	GND		6 V		"		"		"	"		"		"		"		"	"	1A1		"		"			"
		85	"	6 V		GND		"		"		"	"		"		"		"		"	"	1A2		"		"			"
		86	"	"		6 V		GND		"		"	"		"		"		"		"	"	1A3		"		"			"
		87	"	"		"		6 V		GND		"	"		"		"		"		"	"	1A4		"		"			"
		88	"	"		"		"		6 V		"	GND		"		"		"		"	"	2A1		"		"			"
		89	"	"		"		"		"		"	6 V		GND		"		"		"	"	2A2		"		"			"
		90	"	"		"		"		"		"	"		6 V		GND		"		"	"	2A3		"		"			"
		91	"	"		"		"		"		"	"		"		6 V		GND		"	"	2A4		"		"			"
		92	"	"		"		"		"		"	"		"		6 V		6 V		GND	"	2$\overline{G}$		"		"			"
I_{OS4}	3009	93	GND	4 V		4 V		4 V		4 V		"	4 V		4 V		4 V		4 V	GND		4 V	1Y1	-10	-135	-10	-135	-10	-135	mA
		94	"	"		"		"		"		"	"		"		"	GND	"			"	1Y2	"	"	"	"	"	"	"
		95	"	"		"		"		"		"	"		"		"		"			"	1Y3	"	"	"	"	"	"	"
		96	"	"		"		"		"		"	"	GND	"		"		"			"	1Y4	"	"	"	"	"	"	"
		97		"		"		"		"	GND	"	"		"		"		"		GND	"	2Y1	"	"	"	"	"	"	"
		98		"		"		"	GND	"		"	"		"		"		"		"	"	2Y2	"	"	"	"	"	"	"
		99		"		"	GND	"		"		"	"		"		"		"		"	"	2Y3	"	"	"	"	"	"	"
		100		"	GND	"		"		"		"	"		"		"		"		"	"	2Y4	"	"	"	"	"	"	"

See footnotes at end of table.

TABLE III. Group A inspection for device type 05 - Continued.

Symbol	MIL-STD-883 method	Cases 2 and R	Terminal conditions 1/																				Measured terminal	Test limits						Unit
			1	2	3	4	5	6	7	8	9	10	11	12	13	14	15	16	17	18	19	20		Subgroup 9 T_C = +25°C		Subgroup 10 T_C = +125°C		Subgroup 11 T_C = -55°C		
		Test no.	1G	1A1	2Y4	1A2	2Y3	1A3	2Y2	1A4	2Y1	GND	2A1	1Y4	2A2	1Y3	2A3	1Y2	2A4	1Y1	2G	V_{CC}		Min	Max	Min	Max	Min	Max	
t_{PHL}	3003 (Fig. 4)	101	GND	IN								GND								OUT		4.5 V	1A1 to 1Y1	5	20	5	27	5	20	ns
		102	"			IN						"						OUT				"	1A2 to 1Y2	"	"	"	"	"	"	"
		103	"					IN				"				OUT						"	1A3 to 1Y3	"	"	"	"	"	"	"
		104	"							IN		"		OUT								"	1A4 to 1Y4	"	"	"	"	"	"	"
		105									OUT	"	IN								GND	"	2A1 to 2Y1	"	"	"	"	"	"	"
		106							OUT			"			IN						"	"	2A2 to 2Y2	"	"	"	"	"	"	"
		107					OUT					"					IN				"	"	2A3 to 2Y3	"	"	"	"	"	"	"
		108			OUT							"							IN		"	"	2A4 to 2Y4	"	"	"	"	"	"	"
t_{PLH}	3003 (Fig. 4)	109	GND	IN								"								OUT		"	1A1 to 1Y1	"	"	"	"	"	"	"
		110	"			IN						"						OUT				"	1A2 to 1Y2	"	"	"	"	"	"	"
		111	"					IN				"				OUT						"	1A3 to 1Y3	"	"	"	"	"	"	"
		112	"							IN		"		OUT								"	1A4 to 1Y4	"	"	"	"	"	"	"
		113									OUT	"	IN								GND	"	2A1 to 2Y1	"	"	"	"	"	"	"
		114							OUT			"			IN						"	"	2A2 to 2Y2	"	"	"	"	"	"	"
		115					OUT					"					IN				"	"	2A3 to 2Y3	"	"	"	"	"	"	"
		116			OUT							"							IN		"	"	2A4 to 2Y4	"	"	"	"	"	"	"
t_{PZL}	3003 (Fig. 4)	117	IN	GND								"								OUT		"	1G to 1Y1	"	26	"	35	"	26	"
		118	"			GND						"						OUT				"	1G to 1Y2	"	"	"	"	"	"	"
		119	"					GND				"				OUT						"	1G to 1Y3	"	"	"	"	"	"	"
		120	"							GND		"		OUT								"	1G to 1Y4	"	"	"	"	"	"	"
		121									OUT	"	GND								IN	"	2G to 2Y1	"	"	"	"	"	"	"
		122							OUT			"			GND						"	"	2G to 2Y2	"	"	"	"	"	"	"
		123					OUT					"					GND				"	"	2G to 2Y3	"	"	"	"	"	"	"
		124			OUT							"							GND		"	"	2G to 2Y4	"	"	"	"	"	"	"
t_{PZH}	3003 (Fig. 4)	125	IN	4.5 V								"								OUT		"	1G to 1Y1	"	"	"	"	"	"	"
		126	"			4.5 V						"						OUT				"	1G to 1Y2	"	"	"	"	"	"	"
		127	"					4.5 V				"				OUT						"	1G to 1Y3	"	"	"	"	"	"	"
		128	"							4.5 V		"		OUT								"	1G to 1Y4	"	"	"	"	"	"	"
		129									OUT	"	4.5 V								IN	"	2G to 2Y1	"	"	"	"	"	"	"
		130							OUT			"			4.5 V						"	"	2G to 2Y2	"	"	"	"	"	"	"
		131					OUT					"					4.5 V				"	"	2G to 2Y3	"	"	"	"	"	"	"
		132			OUT							"							4.5 V		"	"	2G to 2Y4	"	"	"	"	"	"	"
t_{PLZ}	3003 (Fig. 4)	133	IN	GND								"								OUT		"	1G to 1Y1	"	"	"	"	"	"	"
		134	"			GND						"						OUT				"	1G to 1Y2	"	"	"	"	"	"	"
		135	"					GND				"				OUT						"	1G to 1Y3	"	"	"	"	"	"	"
		136	"							GND		"		OUT								"	1G to 1Y4	"	"	"	"	"	"	"
		137									OUT	"	GND								IN	"	2G to 2Y1	"	"	"	"	"	"	"
		138							OUT			"			GND						"	"	2G to 2Y2	"	"	"	"	"	"	"
		139					OUT					"					GND				"	"	2G to 2Y3	"	"	"	"	"	"	"
		140			OUT							"							GND		"	"	2G to 2Y4	"	"	"	"	"	"	"
t_{PHZ}	3003 (Fig. 4)	141	IN	4.5 V								"								OUT		"	1G to 1Y1	"	"	"	"	"	"	"
		142	"			4.5 V						"						OUT				"	1G to 1Y2	"	"	"	"	"	"	"
		143	"					4.5 V				"				OUT						"	1G to 1Y3	"	"	"	"	"	"	"
		144	"							4.5 V		"		OUT								"	1G to 1Y4	"	"	"	"	"	"	"
		145									OUT	"	4.5 V								IN	"	2G to 2Y1	"	"	"	"	"	"	"
		146							OUT			"			4.5 V						"	"	2G to 2Y2	"	"	"	"	"	"	"
		147					OUT					"					4.5 V				"	"	2G to 2Y3	"	"	"	"	"	"	"
		148			OUT							"							4.5 V		"	"	2G to 2Y4	"	"	"	"	"	"	"

See footnotes at end of table.

TABLE III. Group A inspection for device type 05 - Continued.

Symbol	MIL STD-883 method	Cases 2 and R	Terminal conditions 1/																				Measured terminal	Test limits						Unit
			1	2	3	4	5	6	7	8	9	10	11	12	13	14	15	16	17	18	19	20		Subgroup 9 T_C = +25°C		Subgroup 10 T_C = +125°C		Subgroup 11 T_C = -55°C		
		Test no.	1G	1A1	2Y4	1A2	2Y3	1A3	2Y2	1A4	2Y1	GND	2A1	1Y4	2A2	1Y3	2A3	1Y2	2A4	1Y1	2G	V_{CC}		Min	Max	Min	Max	Min	Max	
t_{TLH}	3004 (Fig. 4)	149	GND	IN								GND								OUT		4.5 V	1Y1	2	12	2	15	2	12	ns
		150	"			IN						"						OUT				"	1Y2	"	"	"	"	"	"	"
		151	"					IN				"				OUT						"	1Y3	"	"	"	"	"	"	"
		152	"							IN		"		OUT								"	1Y4	"	"	"	"	"	"	"
		153									OUT	"	IN								GND	"	2Y1	"	"	"	"	"	"	"
		154							OUT			"			IN						"	"	2Y2	"	"	"	"	"	"	"
		155					OUT					"					IN				"	"	2Y3	"	"	"	"	"	"	"
		156			OUT							"							IN		"	"	2Y4	"	"	"	"	"	"	"
t_{THL}	3004 (Fig. 4)	157	GND	IN								"								OUT		"	1Y1	"	"	"	"	"	"	"
		158	"			IN						"						OUT				"	1Y2	"	"	"	"	"	"	"
		159	"					IN				"				OUT						"	1Y3	"	"	"	"	"	"	"
		160	"							IN		"		OUT								"	1Y4	"	"	"	"	"	"	"
		161									OUT	"	IN								GND	"	2Y1	"	"	"	"	"	"	"
		162							OUT			"			IN						"	"	2Y2	"	"	"	"	"	"	"
		163					OUT					"					IN				"	"	2Y3	"	"	"	"	"	"	"
		164			OUT							"							IN		"	"	2Y4	"	"	"	"	"	"	"

See footnotes at end of table.

TABLE III. Group A inspection for device type 06.

Symbol	MIL-STD-883 method	Case	Terminal conditions 1/																	Measured terminal	Subgroup 1 T_C = +25°C		Subgroup 2 T_C = +125°C		Subgroup 3 T_C = -55°C		Unit
		2	2	3	4	5	7	8	9	10	12	13	14	15	17	18	19	20									
		E	1	2	3	4	5	6	7	8	9	10	11	12	13	14	15	16									
		Test no.	ET	1A	1Y	2A	2Y	3A	3Y	GND	4Y	4A	5Y	5A	6Y	6A	E2	V_{CC}			Min	Max	Min	Max	Min	Max	
V_{IC} (pos)		1	1 mA							OPEN								GND	E1		1/	1.5					V
		2		1 mA						"								"	1A		"	"					"
		3				1 mA				"								"	2A		"	"					"
		4						1 mA		"								"	3A		"	"					"
		5								"		1 mA						"	4A		"	"					"
		6								"				1 mA				"	5A		"	"					"
		7								"						1 mA		"	6A		"	"					"
		8								"							1 mA	"	E2		"	"					"
V_{IC} (neg)		9	-1 mA							GND								OPEN	E1			-1.5					"
		10		-1 mA						"								"	1A			"					"
		11				-1 mA				"								"	2A			"					"
		12						-1 mA		"								"	3A			"					"
		13								"		-1 mA						"	4A			"					"
		14								"				-1 mA				"	5A			"					"
		15								"						-1 mA		"	6A			"					"
		16								"							-1 mA	"	E2			"					"
I_{CC}	3005	17	GND	GND		GND		GND		"		GND		GND		GND	GND	6 V	V_{CC}			0.2		20			μA
I_{CC}	3005	18	GND	6 V		6 V		6 V		"		6 V		6 V		6 V	"	"	"			0.2		20			"
I_{CC2}		19	6 V	6 V		6 V		6 V		"		GND		GND		GND	"	"	"			0.1		10			"
		20	GND	GND		GND		GND		"		6 V		6 V		6 V	6 V	"	"			0.1		10			"
V_{OH3}	3006	21	1.2 V	4.2 V	-20 μA					"							1.2 V	6.0 V	1Y		5.95		5.95		5.95		V
		22	"			4.2 V	-20 μA			"							"	"	2Y		"		"		"		"
		23	"					4.2 V	-20 μA	"							"	"	3Y		"		"		"		"
		24	"							"	-20 μA	4.2 V					"	"	4Y		"		"		"		"
		25	"							"			-20 μA	4.2 V			"	"	5Y		"		"		"		"
		26	"							"					-20 μA	4.2 V	"	"	6Y		"		"		"		"
V_{OH5}	3006	27	"	4.2 V	-7.8 mA					"							"	"	1Y		5.48		5.2		5.48		"
		28	"			4.2 V	-7.8 mA			"							"	"	2Y		"		"		"		"
		29	"					4.2 V	-7.8 mA	"							"	"	3Y		"		"		"		"
		30	"							"	-7.8 mA	4.2 V					"	"	4Y		"		"		"		"
		31	"							"			-7.8 mA	4.2 V			"	"	5Y		"		"		"		"
		32	"							"					-7.8 mA	4.2 V	"	"	6Y		"		"		"		"
V_{OL3}	3007	33	"	1.2 V	20 μA					"							"	"	1Y			0.05		0.05		0.05	"
		34	"			1.2 V	20 μA			"							"	"	2Y			"		"		"	"
		35	"					1.2 V	20 μA	"							"	"	3Y			"		"		"	"
		36	"							"	20 μA	1.2 V					"	"	4Y			"		"		"	"
		37	"							"			20 μA	1.2 V			"	"	5Y			"		"		"	"
		38	"							"					20 μA	1.2 V	"	"	6Y			"		"		"	"
V_{OL5}	3007	39	"	1.2 V	7.8 mA					"							"	"	1Y			0.26		0.4		0.26	"
		40	"			1.2 V	7.8 mA			"							"	"	2Y			"		"		"	"
		41	"					1.2 V	7.8 mA	"							"	"	3Y			"		"		"	"
		42	"							"	7.8 mA	1.2 V					"	"	4Y			"		"		"	"
		43	"							"			7.8 mA	1.2 V			"	"	5Y			"		"		"	"
		44	"							"					7.8 mA	1.2 V	"	"	6Y			"		"		"	"

See footnotes at end of table.

TABLE III. Group A inspection for device type 06 - Continued.

Symbol	MIL-STD-883 method	Case	Terminal conditions 1/																Measured terminal	Subgroup 1 T_C = +25°C		Subgroup 2 T_C = +125°C		Subgroup 3 T_C = -55°C		Unit
		2	2	3	4	5	7	8	9	10	12	13	14	15	17	18	19	20								
		E	1	2	3	4	5	6	7	8	9	10	11	12	13	14	15	16								
		Test no.	E1	1A	1Y	2A	2Y	3A	3Y	GND	4Y	4A	5Y	5A	6Y	6A	E2	V_{CC}		Min	Max	Min	Max	Min	Max	
I_{OZH}		45	0.8 V	9/	6 V					GND							9/	6 V	1Y		10.2		2.0			μA
		46	"			9/	6 V			"							"	"	2Y		"		"			"
		47	"					9/	6 V	"							"	"	3Y		"		"			"
		48	"							"	6 V	9/					"	"	4Y		"		"			"
		49	"							"			6 V	9/			"	"	5Y		"		"			"
		50	"							"					6 V	9/	"	"	6Y		"		"			"
I_{OZL}		51	9/	9/	GND					"							0.8 V	"	1Y		-0.2		-2.0			"
		52	"			9/	GND			"							"	"	2Y		"		"			"
		53	"					9/	GND	"							"	"	3Y		"		"			"
		54	"							"	GND	9/					"	"	4Y		"		"			"
		55	"							"			GND	9/			"	"	5Y		"		"			"
		56	"							"					GND	9/	"	"	6Y		"		"			"
I_{IH}	3010	57	6 V	GND		GND		GND		"		GND		GND		GND	GND	6 V	E1		.05		.01			"
		58	GND	6 V		GND		"		"		"		"		"	"	"	1A		"		"			"
		59	"	GND		6 V		"		"		"		"		"	"	"	2A		"		"			"
		60	"	"		GND		6 V		"		"		"		"	"	"	3A		"		"			"
		61	"	"		"		GND		"		6 V		6 V		"	"	"	4A		"		"			"
		62	"	"		"		"		"		GND		GND		"	"	"	5A		"		"			"
		63	"	"		"		"		"		"		"		6 V	"	"	6A		"		"			"
		64	"	"		"		"		"		"		"		GND	6 V	"	E2		"		"			"
I_{IL}	3009	65	"	6 V		6 V		6 V		"		6 V		6 V		6 V	GND	"	E1		-.05		-0.1			"
		66	"	GND		6 V		"		"		"		"		"	"	"	1A		"		"			"
		67	"	6 V		GND		"		"		"		"		"	"	"	2A		"		"			"
		68	"	"		6 V		GND		"		"		"		"	"	"	3A		"		"			"
		69	"	"		"		6 V		"		GND		"		"	"	"	4A		"		"			"
		70	"	"		"		"		"		6 V		GND		"	"	"	5A		"		"			"
		71	"	"		"		"		"		"		6 V		GND	"	"	6A		"		"			"
		72	"	"		"		"		"		"		6 V		6 V	"	"	E2		"		"			"
I_{OS4}	3011	73	"	4 V	GND					"							GND	4 V	1Y	-10	-135	-10	-135	-10	-135	mA
		74	"			4 V	GND			"							"	"	2Y	"	"	"	"	"	"	"
		75	"					4 V	GND	"							"	"	3Y	"	"	"	"	"	"	"
		76	"							"	GND	4 V					"	"	4Y	"	"	"	"	"	"	"
		77	"							"			GND	4 V			"	"	5Y	"	"	"	"	"	"	"
		78	"							"					GND	4 V	"	"	6Y	"	"	"	"	"	"	"

See footnotes at end of table.

TABLE III. Group A inspection for device type 06 - Continued.

Symbol	MIL-STD-883 method	Case	Terminal conditions 1/																Measured terminal	Subgroup 4 T_C = +25°C						Unit
		2	2	3	4	5	7	8	9	10	12	13	14	15	17	18	19	20								
		E	1	2	3	4	5	6	7	8	9	10	11	12	13	14	15	16		Min	Max					
		Test no.	E1	1A	1Y	2A	2Y	3A	3Y	GND	4Y	4A	5Y	5A	6Y	6A	E2	V_{CC}								
C_I	3012	79	2/							GND								GND	E1		10					pF
		80		2/						"								"	1A		"					"
		81				2/				"								"	2A		"					"
		82						2/		"								"	3A		"					"
		83								"		2/						"	4A		"					"
		84								"				2/				"	5A		"					"
		86								"						2/		"	6A		"					"
		86								"							2/	"	E2		"					"
C_O		87	6 V		2/		2/		2/	"							GND	6 V	Y's		20					"
		88	GND							"	2/		2/		2/		6 V	6 V	Y's		20					"

Symbol	MIL-STD-883 method	Case	Terminal conditions 1/																Measured terminal	Subgroup 9 T_C = +25°C		Subgroup 13 T_C = +125°C		Subgroup 11 T_C = -55°C		Unit
																				Min	Max	Min	Max	Min	Max	
t_{PHL}	3003 (Fig. 4)	89	GND	IN	OUT					"							GND	4.5 V	1A to 1Y	5	21	5	28	5	21	ns
		90	"			IN	OUT			"							"	"	2A to 2Y	"	"	"	"	"	"	"
		91	"					IN	OUT	"							"	"	3A to 3Y	"	"	"	"	"	"	"
		92	"							"	OUT	IN					"	"	4A to 4Y	"	"	"	"	"	"	"
		93	"							"			OUT	IN			"	"	5A to 5Y	"	"	"	"	"	"	"
		94	"							"					OUT	IN	"	"	6A to 6Y	"	"	"	"	"	"	"
t_{PLH}	3003 (Fig. 4)	95	"	IN	OUT					"							"	"	1A to 1Y	"	"	"	"	"	"	"
		96	"			IN	OUT			"							"	"	2A to 2Y	"	"	"	"	"	"	"
		97	"					IN	OUT	"							"	"	3A to 3Y	"	"	"	"	"	"	"
		98	"							"	OUT	IN					"	"	4A to 4Y	"	"	"	"	"	"	"
		99	"							"			OUT	IN			"	"	5A to 5Y	"	"	"	"	"	"	"
		100	"							"					OUT	IN	"	"	6A to 6Y	"	"	"	"	"	"	"
t_{PZH}	3003 (Fig. 4)	101	IN	4.5 V	OUT					"							"	"	E1 to 1Y	"	38	"	51	"	38	"
		102	"			4.5 V	OUT			"							"	"	E1 to 2Y	"	"	"	"	"	"	"
		103	"					4.5 V	OUT	"							"	"	E1 to 3Y	"	"	"	"	"	"	"
		104	"							"	OUT	4.5 V					"	"	E1 to 4Y	"	"	"	"	"	"	"
		105	"							"			OUT	4.5 V			"	"	E1 to 5Y	"	"	"	"	"	"	"
		106	"							"					OUT	4.5 V	"	"	E1 to 6Y	"	"	"	"	"	"	"
		107	GND	4.5 V	OUT					"							IN	"	E2 to 1Y	"	"	"	"	"	"	"
		108	"			4.5 V	OUT			"							"	"	E2 to 2Y	"	"	"	"	"	"	"
		109	"					4.5 V	OUT	"							"	"	E2 to 3Y	"	"	"	"	"	"	"
		110	"							"	OUT	4.5 V					"	"	E2 to 4Y	"	"	"	"	"	"	"
		111	"							"			OUT	4.5 V			"	"	E2 to 5Y	"	"	"	"	"	"	"
		112	"							"					OUT	4.5 V	"	"	E2 to 6Y	"	"	"	"	"	"	"
t_{PZL}	3003 (Fig. 4)	113	IN	GND	OUT					"							GND	"	E1 to 1Y	"	"	"	"	"	"	"
		114	"			GND	OUT			"							"	"	E1 to 2Y	"	"	"	"	"	"	"
		115	"					GND	OUT	"							"	"	E1 to 3Y	"	"	"	"	"	"	"
		116	"							"	OUT	GND					"	"	E1 to 4Y	"	"	"	"	"	"	"
		117	"							"			OUT	GND			"	"	E1 to 5Y	"	"	"	"	"	"	"
		118	"							"					OUT	GND	"	"	E1 to 6Y	"	"	"	"	"	"	"
		119	GND	GND	OUT					"							IN	"	E2 to 1Y	"	"	"	"	"	"	"
		120	"			GND	OUT			"							"	"	E2 to 2Y	"	"	"	"	"	"	"
		121	"					GND	OUT	"							"	"	E2 to 3Y	"	"	"	"	"	"	"
		122	"							"	OUT	GND					"	"	E2 to 4Y	"	"	"	"	"	"	"
		123	"							"			OUT	GND			"	"	E2 to 5Y	"	"	"	"	"	"	"
		124	"							"					OUT	GND	"	"	E2 to 6Y	"	"	"	"	"	"	"

See footnote, at end of table.

TABLE III. Group A inspection for device type 06 - Continued.

Symbol	MIL-STD-883 method	Case	Terminal conditions 1/																Measured terminal	Subgroup 1 T_C = +25°C		Subgroup 2 T_C = +125°C		Subgroup 3 T_C = -55°C		Unit
		2	2	3	4	5	7	8	9	10	12	13	14	15	17	18	19	20								
		E -	1	2	3	4	5	6	7	8	9	10	11	12	13	14	15	16								
		Test no.	$\overline{E1}$	1A	1Y	2A	2Y	3A	3Y	GND	4Y	4A	5Y	5A	6Y	6A	$\overline{E2}$	V_{CC}		Min	Max	Min	Max	Min	Max	
t_{PLZ}	3003 (Fig. 4)	125	IN	GND	OUT					GND							GND	4.5 V	E1 to 1Y	5	Jd	5	51	5	Jd	ns
		126	"			GND	OUT			"							"	"	E1 to 2Y	"	"	"	"	"	"	"
		127	"					GND	OUT	"							"	"	E1 to 3Y	"	"	"	"	"	"	"
		128	"							"	OUT	GND					"	"	E1 to 4Y	"	"	"	"	"	"	"
		129	"							"			OUT	GND			"	"	E1 to 5Y	"	"	"	"	"	"	"
		130	"							"					OUT	GND	"	"	E1 to 6Y	"	"	"	"	"	"	"
		131	GND	GND	OUT					"							IN	"	E2 to 1Y	"	"	"	"	"	"	"
		132	"			GND	OUT			"							"	"	E2 to 2Y	"	"	"	"	"	"	"
		133	"					GND	OUT	"							"	"	E2 to 3Y	"	"	"	"	"	"	"
		134	"							"	OUT	GND					"	"	E2 to 4Y	"	"	"	"	"	"	"
		135	"							"			OUT	GND			"	"	E2 to 5Y	"	"	"	"	"	"	"
		136	"							"					OUT	GND	"	"	E2 to 6Y	"	"	"	"	"	"	"
t_{PHZ}		137	IN	4.5 V	OUT					"							GND	"	E1 to 1Y	"	"	"	"	"	"	"
		138	"			4.5 V	OUT			"							"	"	E1 to 2Y	"	"	"	"	"	"	"
		139	"					4.5 V	OUT	"							"	"	E1 to 3Y	"	"	"	"	"	"	"
		140	"							"	OUT	4.5 V					"	"	E1 to 4Y	"	"	"	"	"	"	"
		141	"							"			OUT	4.5 V			"	"	E1 to 5Y	"	"	"	"	"	"	"
		142	"							"					OUT	4.5 V	"	"	E1 to 6Y	"	"	"	"	"	"	"
		143	GND	4.5 V	OUT					"							IN	"	E2 to 1Y	"	"	"	"	"	"	"
		144	"			4.5 V	OUT			"							"	"	E2 to 2Y	"	"	"	"	"	"	"
		145	"					4.5 V	OUT	"							"	"	E2 to 3Y	"	"	"	"	"	"	"
		146	"							"	OUT	4.5 V					"	"	E2 to 4Y	"	"	"	"	"	"	"
		147	"							"			OUT	4.5 V			"	"	E2 to 5Y	"	"	"	"	"	"	"
		148	"							"					OUT	4.5 V	"	"	E2 to 6Y	"	"	"	"	"	"	"
t_{TLH}	3004 (Fig. 4)	149	"	IN	OUT					"							GND	"	1Y	2	12	2	16	2	12	"
		150	"			IN	OUT			"							"	"	2Y	"	"	"	"	"	"	"
		151	"					IN	OUT	"							"	"	3Y	"	"	"	"	"	"	"
		152	"							"	OUT	IN					"	"	4Y	"	"	"	"	"	"	"
		153	"							"			OUT	IN			"	"	5Y	"	"	"	"	"	"	"
		154	"							"					OUT	IN	"	"	6Y	"	"	"	"	"	"	"
t_{THL}	3004 (Fig. 4)	155	"	IN	OUT					"							"	"	1Y	"	"	"	"	"	"	"
		156	"			IN	OUT			"							"	"	2Y	"	"	"	"	"	"	"
		157	"					IN	OUT	"							"	"	3Y	"	"	"	"	"	"	"
		158	"							"	OUT	IN					"	"	4Y	"	"	"	"	"	"	"
		159	"							"			OUT	IN			"	"	5Y	"	"	"	"	"	"	"
		160	"							"					OUT	IN	"	"	6Y	"	"	"	"	"	"	"

See footnotes at end of table.

TABLE III. Group A inspection for device type 07.

Symbol	MIL-STD-883 method	Case	Terminal conditions 1/																Measured terminal	Subgroup 1 T_C = +25°C		Subgroup 2 T_C = +125°C		Subgroup 3 T_C = -55°C		Unit
		2	2	3	4	5	7	8	9	10	12	13	14	15	17	18	19	20								
		E	1	2	3	4	5	6	7	8	9	10	11	12	13	14	15	16								
		Test no.	ET	1A	1Y	2A	2Y	3A	3Y	GND	4Y	4A	5Y	5A	6Y	6A	$\overline{E2}$	V_{CC}		Min	Max	Min	Max	Min	Max	
V_{IC} (pos)		1	1 mA							OPEN								GND	$\overline{E1}$	1/	1.5					V
		2		1 mA						"								"	1A	"	"					"
		3				1 mA				"								"	2A	"	"					"
		4						1 mA		"								"	3A	"	"					"
		5								"		1 mA						"	4A	"	"					"
		6								"				1 mA				"	5A	"	"					"
		7								"						1 mA		"	6A	"	"					"
		8								"							1 mA	"	$\overline{E2}$	"	"					"
V_{IC} (neg)		9	-1 mA							GND								OPEN	$\overline{E1}$		-1.5					"
		10		-1 mA						"								"	1A		"					"
		11				-1 mA				"								"	2A		"					"
		12						-1 mA		"								"	3A		"					"
		13								"		-1 mA						"	4A		"					"
		14								"				-1 mA				"	5A		"					"
		15								"						-1 mA		"	6A		"					"
		16								"							-1 mA	"	$\overline{E2}$		"					"
I_{CC}	3005	17	GND	GND		GND		GND		"		GND		GND		GND	GND	6 V	V_{CC}		0.2		20			μA
I_{CC}	3005	18	GND	6 V		6 V		6 V		"		6 V		6 V		6 V	"	"	"		0.2		20			"
I_{CCZ}		19	6 V	6 V		6 V		6 V		"		GND		GND		GND	"	"	"		0.1		10			"
		20	GND	GND		GND		GND		"		6 V		6 V		6 V	6 V	"	"		0.1		10			"
V_{OH3}	3006	21	1.2 V	1.2 V	-20 μA					"							1.2 V	6 V	1Y	5.95		5.95		5.95		V
		22	"			1.2 V	-20 μA			"							"	"	2Y	"		"		"		"
		23	"					1.2 V	-20 μA	"							"	"	3Y	"		"		"		"
		24	"							"	-20 μA	1.2 V					"	"	4Y	"		"		"		"
		25	"							"			-20 μA	1.2 V			"	"	5Y	"		"		"		"
		26	"							"					-20 μA	1.2 V	"	"	6Y	"		"		"		"
V_{OH5}	3006	27	"	1.2 V	-7.8 mA					"							"	"	1Y	5.48		5.2		5.48		"
		28	"			1.2 V	-7.8 mA			"							"	"	2Y	"		"		"		"
		29	"					1.2 V	-7.8 mA	"							"	"	3Y	"		"		"		"
		30	"							"	-7.8 mA	1.2 V					"	"	4Y	"		"		"		"
		31	"							"			-7.8 mA	1.2 V			"	"	5Y	"		"		"		"
		32	"							"					-7.8 mA	1.2 V	"	"	6Y	"		"		"		"
V_{OL3}	3007	33	"	4.2 V	20 μA					"							"	"	1Y		0.05		0.05		0.05	"
		34	"			4.2 V	20 μA			"							"	"	2Y		"		"		"	"
		35	"					4.2 V	20 μA	"							"	"	3Y		"		"		"	"
		36	"							"	20 μA	4.2 V					"	"	4Y		"		"		"	"
		37	"							"			20 μA	4.2 V			"	"	5Y		"		"		"	"
		38	"							"					20 μA	4.2 V	"	"	6Y		"		"		"	"
V_{OL5}	3007	39	"	4.2 V	7.8 mA					"							"	"	1Y		0.26		0.4		0.26	"
		40	"			4.2 V	7.8 mA			"							"	"	2Y		"		"		"	"
		41	"					4.2 V	7.8 mA	"							"	"	3Y		"		"		"	"
		42	"							"	7.8 mA	4.2 V					"	"	4Y		"		"		"	"
		43	"							"			7.8 mA	4.2 V			"	"	5Y		"		"		"	"
		44	"							"					7.8 mA	1.2 V	"	"	6Y		"		"		"	"

See footnotes at end of table.

TABLE III. Group A inspection for device type 07 - Continued.

Symbol	MIL-STD-883 method	Case	Terminal conditions 1/																	Measured terminal	Subgroup 1 T_C = +25°C		Subgroup 2 T_C = +125°C		Subgroup 3 T_C = -55°C		Unit
		2	2	3	4	5	7	8	9	10	12	13	14	15	17	18	19	20									
		E	1	2	3	4	5	6	7	8	9	10	11	12	13	14	15	16									
		Test no.	ET	1A	1Y	2A	2Y	3A	3Y	GND	4Y	4A	5Y	5A	6Y	6A	E2	V_{CC}			Min	Max	Min	Max	Min	Max	
I_{OZH}		45	0.8 V	9/	6 V					GND							9/	6 V	1Y		0.2		2.0				µA
		46	"			9/	6 V			"							"	"	2Y		"		"				"
		47	"					9/	6 V	"							"	"	3Y		"		"				"
		48	"							"	6 V	9/					"	"	4Y		"		"				"
		49	"							"			6 V	9/			"	"	5Y		"		"				"
		50	"							"					6 V	9/	"	"	6Y		"		"				"
I_{OZL}		51	9/	9/	GND					"							0.8 V	"	1Y		-0.2		-2.0				"
		52	"			9/	GND			"							"	"	2Y		"		"				"
		53	"					9/	GND	"							"	"	3Y		"		"				"
		54	"							"	GND	9/					"	"	4Y		"		"				"
		55	"							"			GND	9/			"	"	5Y		"		"				"
		56	"							"					GND	9/	"	"	6Y		"		"				"
I_{IH}	3010	57	6 V	GND		GND		GND		"		GND		GND		GND	GND	6 V	E1		.05		.01				"
		58	GND	6 V		GND		"		"		"		"		"	"	"	1A		"		"				"
		59	"	GND		6 V		"		"		"		"		"	"	"	2A		"		"				"
		60	"	"		GND		6 V		"		"		"		"	"	"	3A		"		"				"
		61	"	"		"		GND		"		6 V		"		"	"	"	4A		"		"				"
		62	"	"		"		"		"		GND		6 V		"	"	"	5A		"		"				"
		63	"	"		"		"		"		"		GND		6 V	"	"	6A		"		"				"
		64	"	"		"		"		"		"		GND		GND	6 V	"	E2		"		"				"
I_{IL}	3009	65	"	6 V		6 V		6 V		"		6 V		6 V		6 V	"	"	E1		-.05		-0.1				"
		66	6 V	GND		6 V		"		"		"		"		"	"	"	1A		"		"				"
		67	"	6 V		GND		"		"		"		"		"	"	"	2A		"		"				"
		68	"	"		6 V		GND		"		"		"		"	"	"	3A		"		"				"
		69	"	"		"		6 V		"		GND		"		"	"	"	4A		"		"				"
		70	"	"		"		"		"		6 V		GND		"	"	"	5A		"		"				"
		71	"	"		"		"		"		"		6 V		GND	"	"	6A		"		"				"
		72	"	"		"		"		"		"		6 V		6 V	GND	"	E2		"		"				"
I_{OS4}	3011	73	GND	GND	GND					"							"	4 V	1Y	-10	-135	-10	-135	-10	-135	mA
		74	"			GND	GND			"							"	"	2Y	"	"	"	"	"	"	"
		75	"					GND	GND	"							"	"	3Y	"	"	"	"	"	"	"
		76	"							"	GND	GND					"	"	4Y	"	"	"	"	"	"	"
		77	"							"			GND	GND			"	"	5Y	"	"	"	"	"	"	"
		78	"							"					GND	GND	"	"	6Y	"	"	"	"	"	"	"

See footnotes at end of table.

TABLE III. Group A inspection for device type 07 - Continued.

Symbol	MIL-STD-883 method	Case	Terminal conditions 1/																Measured terminal	Subgroup 4 T_L = +25°C					Unit
		2	2	3	4	5	7	8	9	10	12	13	14	15	17	18	19	20							
		E	1	2	3	4	5	6	7	8	9	10	11	12	13	14	15	16							
		Test no.	$\overline{E1}$	1A	1Y	2A	2Y	3A	3Y	GND	4Y	4A	5Y	5A	6Y	6A	E2	V_{CC}		Min	Max				
C_I	3012	79	2/							GND								GND	E1		10				pF
		80		2/						"								"	1A		"				"
		81				2/				"								"	2A		"				"
		82						2/		"								"	3A		"				"
		83								"		2/						"	4A		"				"
		84								"				2/				"	5A		"				"
		85								"						2/		"	6A		"				"
		86								"							2/	"	E2		"				"
C_O		87	6 V		2/		2/		2/	"							GND	6 V	Y's		20				"
		88	GND							"	2/		2/		2/		6 V	6 V	Y's		20				

Symbol	MIL-STD-883 method	Case	Terminal conditions 1/																Measured terminal	Subgroup 9 T_C = +25°C		Subgroup 10 T_C = +125°C		Subgroup 11 T_C = -55°C		Unit
																				Min	Max	Min	Max	Min	Max	
t_{PHL}	3003 (Fig. 4)	89	GND	IN	OUT					"							GND	4.5 V	1A to 1Y	5	22	5	29	5	22	ns
		90	"			IN	OUT			"							"	"	2A to 2Y	"	"	"	"	"	"	"
		91	"					IN	OUT	"							"	"	3A to 3Y	"	"	"	"	"	"	"
		92	"							"	OUT	IN					"	"	4A to 4Y	"	"	"	"	"	"	"
		93	"							"			OUT	IN			"	"	5A to 5Y	"	"	"	"	"	"	"
		94	"							"					OUT	IN	"	"	6A to 6Y	"	"	"	"	"	"	"
t_{PLH}	3003 (Fig. 4)	95	"	IN	OUT					"							"	"	1A to 1Y	"	"	"	"	"	"	"
		96	"			IN	OUT			"							"	"	2A to 2Y	"	"	"	"	"	"	"
		97	"					IN	OUT	"							"	"	3A to 3Y	"	"	"	"	"	"	"
		98	"							"	OUT	IN					"	"	4A to 4Y	"	"	"	"	"	"	"
		99	"							"			OUT	IN			"	"	5A to 5Y	"	"	"	"	"	"	"
		100	"							"					OUT	IN	"	"	6A to 6Y	"	"	"	"	"	"	"
t_{PZH}	3003 (Fig. 4)	101	IN	GND	OUT					"							"	"	E1 to 1Y	"	38	"	51	"	38	"
		102	"			GND	OUT			"							"	"	E1 to 2Y	"	"	"	"	"	"	"
		103	"					GND	OUT	"							"	"	E1 to 3Y	"	"	"	"	"	"	"
		104	"							"	OUT	GND					"	"	E1 to 4Y	"	"	"	"	"	"	"
		105	"							"			OUT	GND			"	"	E1 to 5Y	"	"	"	"	"	"	"
		106	"							"					OUT	GND	"	"	E1 to 6Y	"	"	"	"	"	"	"
		107	GND	GND	OUT					"							IN	"	E2 to 1Y	"	"	"	"	"	"	"
		108	"			GND	OUT			"							"	"	E2 to 2Y	"	"	"	"	"	"	"
		109	"					GND	OUT	"							"	"	E2 to 3Y	"	"	"	"	"	"	"
		110	"							"	OUT	GND					"	"	E2 to 4Y	"	"	"	"	"	"	"
		111	"							"			OUT	GND			"	"	E2 to 5Y	"	"	"	"	"	"	"
		112	"							"					OUT	GND	"	"	E2 to 6Y	"	"	"	"	"	"	"
t_{PZL}	3003 (Fig. 4)	113	IN	4.5 V	OUT					"							GND	"	E1 to 1Y	"	"	"	"	"	"	"
		114	"			4.5 V	OUT			"							"	"	E1 to 2Y	"	"	"	"	"	"	"
		115	"					4.5 V	OUT	"							"	"	E1 to 3Y	"	"	"	"	"	"	"
		116	"							"	OUT	4.5 V					"	"	E1 to 4Y	"	"	"	"	"	"	"
		117	"							"			OUT	4.5 V			"	"	E1 to 5Y	"	"	"	"	"	"	"
		118	"							"					OUT	4.5 V	"	"	E1 to 6Y	"	"	"	"	"	"	"
		119	GND	4.5 V	OUT					"							IN	"	E2 to 1Y	"	"	"	"	"	"	"
		120	"			4.5 V	OUT			"							"	"	E2 to 2Y	"	"	"	"	"	"	"
		121	"					4.5 V	OUT	"							"	"	E2 to 3Y	"	"	"	"	"	"	"
		122	"							"	OUT	4.5 V					"	"	E2 to 4Y	"	"	"	"	"	"	"
		123	"							"			OUT	4.5 V			"	"	E2 to 5Y	"	"	"	"	"	"	"
		124	"							"					OUT	4.5 V	"	"	E2 to 6Y	"	"	"	"	"	"	"

See footnotes at end of table.

TABLE III. Group A inspection for device type 07 - Continued.

Symbol	MIL-STD-883 method	Case	Terminal conditions 1/																Measured terminal	Subgroup 9 T_C = +25°C		Subgroup 10 T_C = +125°C		Subgroup 11 T_C = -55°C		Unit
		2	2	3	4	5	7	8	9	10	12	13	14	15	17	18	19	20								
		E	1	2	3	4	5	6	7	8	9	10	11	12	13	14	15	16								
		Test no.	$\overline{E1}$	1A	1Y	2A	2Y	3A	3Y	GND	4Y	4A	5Y	5A	6Y	6A	$\overline{E2}$	V_{CC}		Min	Max	Min	Max	Min	Max	
t_{PLZ}	3003 (Fig. 4)	125	IN	4.5 V	OUT					GND							GND	4.5 V	$\overline{E1}$ to 1Y	5	38	5	51	5	36	ns
		126	"			4.5 V	OUT			"							"	"	$\overline{E1}$ to 2Y	"	"	"	"	"	"	"
		127	"					4.5 V	OUT	"							"	"	$\overline{E1}$ to 3Y	"	"	"	"	"	"	"
		128	"							"	OUT	4.5 V					"	"	$\overline{E1}$ to 4Y	"	"	"	"	"	"	"
		129	"							"			OUT	4.5 V			"	"	$\overline{E1}$ to 5Y	"	"	"	"	"	"	"
		130	"							"					OUT	4.5 V	"	"	$\overline{E1}$ to 6Y	"	"	"	"	"	"	"
		131	GND	4.5 V	OUT					"							IN	"	$\overline{E2}$ to 1Y	"	"	"	"	"	"	"
		132	"			4.5 V	OUT			"							"	"	$\overline{E2}$ to 2Y	"	"	"	"	"	"	"
		133	"					4.5 V	OUT	"							"	"	$\overline{E2}$ to 3Y	"	"	"	"	"	"	"
		134	"							"	OUT	4.5 V					"	"	$\overline{E2}$ to 4Y	"	"	"	"	"	"	"
		135	"							"			OUT	4.5 V			"	"	$\overline{E2}$ to 5Y	"	"	"	"	"	"	"
		136	"							"					OUT	4.5 V	"	"	$\overline{E2}$ to 6Y	"	"	"	"	"	"	"
t_{PHZ}		137	IN	GND	OUT					"							GND	"	$\overline{E1}$ to 1Y	"	"	"	"	"	"	"
		138	"			GND	OUT			"							"	"	$\overline{E1}$ to 2Y	"	"	"	"	"	"	"
		139	"					GND	OUT	"							"	"	$\overline{E1}$ to 3Y	"	"	"	"	"	"	"
		140	"							"	OUT	GND					"	"	$\overline{E1}$ to 4Y	"	"	"	"	"	"	"
		141	"							"			OUT	GND			"	"	$\overline{E1}$ to 5Y	"	"	"	"	"	"	"
		142	"							"					OUT	GND	"	"	$\overline{E1}$ to 6Y	"	"	"	"	"	"	"
		143	GND	GND	OUT					"							IN	"	$\overline{E2}$ to 1Y	"	"	"	"	"	"	"
		144	"			GND	OUT			"							"	"	$\overline{E2}$ to 2Y	"	"	"	"	"	"	"
		145	"					GND	OUT	"							"	"	$\overline{E2}$ to 3Y	"	"	"	"	"	"	"
		146	"							"	OUT	GND					"	"	$\overline{E2}$ to 4Y	"	"	"	"	"	"	"
		147	"							"			OUT	GND			"	"	$\overline{E2}$ to 5Y	"	"	"	"	"	"	"
		148	"							"					OUT	GND	"	"	$\overline{E2}$ to 6Y	"	"	"	"	"	"	"
t_{TLH}	3004 (Fig. 4)	149	"	IN	OUT					"							GND	"	1Y	2	12	2	16	2	12	"
		150	"			IN	OUT			"							"	"	2Y	"	"	"	"	"	"	"
		151	"					IN	OUT	"							"	"	3Y	"	"	"	"	"	"	"
		152	"							"	OUT	IN					"	"	4Y	"	"	"	"	"	"	"
		153	"							"			OUT	IN			"	"	5Y	"	"	"	"	"	"	"
		154	"							"					OUT	IN	"	"	6Y	"	"	"	"	"	"	"
t_{THL}	3004 (Fig. 4)	155	"	IN	OUT					"							"	"	1Y	"	"	"	"	"	"	"
		156	"			IN	OUT			"							"	"	2Y	"	"	"	"	"	"	"
		157	"					IN	OUT	"							"	"	3Y	"	"	"	"	"	"	"
		158	"							"	OUT	IN					"	"	4Y	"	"	"	"	"	"	"
		159	"							"			OUT	IN			"	"	5Y	"	"	"	"	"	"	"
		160	"							"					OUT	IN	"	"	6Y	"	"	"	"	"	"	"

See footnotes at end of table.

TABLE III. Group A inspection for device type 08.

Symbol	MIL-STD-883 method	Case	Terminal conditions 1/																	Measured terminal	Subgroup 1 T_C = +25°C		Subgroup 2 T_C = +125°C		Subgroup 3 T_C = -55°C		Unit
		2	2	3	4	5	7	8	9	10	12	13	14	15	17	18	19	20									
		E	1	2	3	4	5	6	7	8	9	10	11	12	13	14	15	16			Min	Max	Min	Max	Min	Max	
		Test no.	E1	1A	1Y	2A	2Y	3A	3Y	GND	4Y	4A	5Y	5A	6Y	6A	E2	V_{CC}									
V_{IC} (pos)		1	1 mA							OPEN								GND	E1	1/	1.5					V
		2		1 mA						"								"	1A	"	"					"
		3				1 mA				"								"	2A	"	"					"
		4						1 mA		"								"	3A	"	"					"
		5								"		1 mA						"	4A	"	"					"
		6								"				1 mA				"	5A	"	"					"
		7								"						1 mA		"	6A	"	"					"
		8								"							1 mA	"	E2	"	"					"
V_{IC} (neg)		9	-1 mA							GND								OPEN	E1		-1.5					"
		10		-1 mA						"								"	1A		"					"
		11				-1 mA				"								"	2A		"					"
		12						-1 mA		"								"	3A		"					"
		13								"		-1 mA						"	4A		"					"
		14								"				-1 mA				"	5A		"					"
		15								"						-1 mA		"	6A		"					"
		16								"							-1 mA	"	E2		"					"
I_{CC}	3005	17	GND	GND		GND		GND		"		GND		GND		GND	GND	6 V	V_{CC}		0.2		20			μA
I_{CC}	3005	18	GND	6 V		6 V		6 V		"		6 V		6 V		6 V	"	"	"		0.2		20			"
I_{CCZ}		19	6 V	6 V		6 V		6 V		"		6 V		GND		GND	"	"	"		0.1		10			"
		20	GND	GND		GND		GND		"		GND		6 V		6 V	6 V	"	"		0.1		10			"
V_{OH3}	3006	21	1.2 V	4.2 V	-20 μA					"								6 V	1Y	5.95		5.95		5.95		V
		22	"			4.2 V	-20 μA			"								"	2Y	"		"		"		"
		23	"					4.2 V	-20 μA	"								"	3Y	"		"		"		"
		24	"							"	-20 μA	4.2 V						"	4Y	"		"		"		"
		25								"			-20 μA	4.2 V			1.2 V	"	5Y	"		"		"		"
		26								"					-20 μA	4.2 V	1.2 V	"	6Y	"		"		"		"
V_{OH5}	3006	27	1.2 V	4.2 V	-7.8 mA					"								"	1Y	5.48		5.2		5.48		"
		28	"			4.2 V	-7.8 mA			"								"	2Y	"		"		"		"
		29	"					4.2 V	-7.8 mA	"								"	3Y	"		"		"		"
		30	"							"	-7.8 mA	4.2 V						"	4Y	"		"		"		"
		31								"			-7.8 mA	4.2 V			1.2 V	"	5Y	"		"		"		"
		32								"					-7.8 mA	4.2 V	1.2 V	"	6Y	"		"		"		"
V_{OL3}	3007	33	1.2 V	1.2 V	20 μA					"								"	1Y		0.05		0.05		0.05	"
		34	"			1.2 V	20 μA			"								"	2Y		"		"		"	"
		35	"					1.2 V	20 μA	"								"	3Y		"		"		"	"
		36	"							"	20 μA	1.2 V						"	4Y		"		"		"	"
		37								"			20 μA	1.2 V			1.2 V	"	5Y		"		"		"	"
		38								"					20 μA	1.2 V	1.2 V	"	6Y		"		"		"	"
V_{OL5}	3007	39	1.2 V	1.2 V	7.8 mA					"								"	1Y		0.26		0.3		0.26	"
		40	"			1.2 V	7.8 mA			"								"	2Y		"		"		"	"
		41	"					1.2 V	7.8 mA	"								"	3Y		"		"		"	"
		42	"							"	7.8 mA	1.2 V						"	4Y		"		"		"	"
		43								"			7.8 mA	1.2 V			1.2 V	"	5Y		"		"		"	"
		44								"					7.8 mA	1.2 V	1.2 V	"	6Y		"		"		"	"

See footnotes at end of table.

TABLE III. Group A inspection for device type 08 - Continued.

Symbol	MIL-STD-883 method	Case	Terminal conditions 1/																Measured terminal	Subgroup 1 T_C = +25°C		Subgroup 2 T_C = +125°C		Subgroup 3 T_C = -55°C		Unit
		2	2	3	4	5	7	8	9	10	12	13	14	15	17	18	19	20								
		E	1	2	3	4	5	6	7	8	9	10	11	12	13	14	15	16								
		Test no.	E1	1A	1Y	2A	2Y	3A	3Y	GND	4Y	4A	5Y	5A	6Y	6A	E2	V_{CC}		Min	Max	Min	Max	Min	Max	
I_{OZH}		45	9/	9/	6 V					GND								6 V	1Y		0.2		2.0			μA
		46	"			9/	6 V			"								"	2Y		"		"			"
		47	"					9/	6 V	"								"	3Y		"		"			"
		48	"							"	6 V	9/						"	4Y		"		"			"
		49								"			6 V	9/			9/	"	5Y		"		"			"
		50								"					6 V	9/	9/	"	6Y		"		"			"
I_{OZL}		51	9/	9/	GND					"								"	1Y		-0.2		-2.0			"
		52	"			9/	GND			"								"	2Y		"		"			"
		53	"					9/	GND	"								"	3Y		"		"			"
		54	"							"	GND	9/						"	4Y		"		"			"
		55								"			GND	9/			9/	"	5Y		"		"			"
		56								"					GND	9/	9/	"	6Y		"		"			"
I_{IH}	3010	57	6 V	GND		GND		GND		"		GND		GND		GND	GND	6 V	E1		.05		0.1			"
		58	GND	6 V		GND		"		"		"		"		"	"	"	1A		"		"			"
		59	"	GND		6 V		"		"		"		"		"	"	"	2A		"		"			"
		60	"	"		GND		6 V		"		"		"		"	"	"	3A		"		"			"
		61	"	"		"		GND		"		6 V		"		"	"	"	4A		"		"			"
		62	"	"		"		"	/	"		GND		6 V		"	"	"	5A		"		"			"
		63	"	"		"		"		"		"		GND		6 V	"	"	6A		"		"			"
		64	"	"		"		"		"		"		GND		GND	6 V	"	E2		"		"			"
I_{IL}	3009	65	"	6 V		6 V		6 V		"		6 V		6 V		6 V	"	"	E1		-.05		-0.1			"
		66	6 V	GND		6 V		"		"		"		"		"	"	"	1A		"		"			"
		67	"	6 V		GND		"		"		"		"		"	"	"	2A		"		"			"
		68	"	"		6 V		GND		"		"		"		"	"	"	3A		"		"			"
		69	"	"		"		6 V		"		GND		"		"	"	"	4A		"		"			"
		70	"	"		"		"		"		6 V		GND		"	"	"	5A		"		"			"
		71	"	"		"		"		"		"		6 V		GND	"	"	6A		"		"			"
		72	"	"		"		"		"		"		6 V		6 V	GND	"	E2		"		"			"
I_{OS4}	3011	73	GND	4 V	GND					"								4 V	1Y	-10	-135	-10	-135	-10	-135	mA
		74	"			4 V	GND			"								"	2Y	"	"	"	"	"	"	"
		75	"					4 V	GND	"								"	3Y	"	"	"	"	"	"	"
		76	"							"	GND	4 V						"	4Y	"	"	"	"	"	"	"
		77								"			GND	4 V			GND	"	5Y	"	"	"	"	"	"	"
		78								"					GND	4 V	GND	"	6Y	"	"	"	"	"	"	"
																				Subgroup 4 T_C = +25°C						
																				Min	Max					
C_I	3012	79	2/							GND								GND	E1		10					pF
		80		2/						"								"	1A		"					"
		81				2/				"								"	2A		"					"
		82						2/		"								"	3A		"					"
		83								"		2/						"	4A		"					"
		84								"				2/				"	5A		"					"
		85								"						2/		"	6A		"					"
		86								"							2/	"	E2		"					"

See footnotes at end of table.

TABLE III. Group A inspection for device type 08 - Continued.

Symbol	MIL-STD-883 method	Case 2 / E / Test no.	Terminal conditions 1/: 2 / 1 / ET	3 / 2 / 1A	4 / 3 / 1Y	5 / 4 / 2A	7 / 5 / 2Y	8 / 6 / 3A	9 / 7 / 3Y	10 / 8 / GND	12 / 9 / 4Y	13 / 10 / 4A	14 / 11 / 5Y	15 / 12 / 5A	17 / 13 / 6Y	18 / 14 / 6A	19 / 15 / E2	20 / 16 / V_{CC}	Measured terminal	Subgroup 4 T_C = +25°C Min	Subgroup 4 T_C = +25°C Max					Unit
C_o		87	6 V		2/		2/		2/	GND	2/		2/		2/		GND	6 V	Y's		20					pF
		88	GND							GND							6 V	6 V	Y's		20					pF
																				Subgroup 9 T_C = +25°C Min	Subgroup 9 T_C = +25°C Max	Subgroup 10 T_C = +125°C Min	Subgroup 10 T_C = +125°C Max	Subgroup 11 T_C = -55°C Min	Subgroup 11 T_C = -55°C Max	
t_{PHL}	3003 (Fig. 4)	89	GND	IN	OUT					"								4.5 V	1A to 1Y	5	21	5	28	5	21	ns
		90	"			IN	OUT			"								"	2A to 2Y	"	"	"	"	"	"	"
		91	"					IN	OUT	"								"	3A to 3Y	"	"	"	"	"	"	"
		92	"							"								"	4A to 4Y	"	"	"	"	"	"	"
		93								"	OUT	IN						"	5A to 5Y	"	"	"	"	"	"	"
		94								"			OUT	IN	OUT	IN	GND	GND	"	6A to 6Y	"	"	"	"	"	"	"
t_{PLH}	3003 (Fig. 4)	95	GND	IN	OUT					"								"	1A to 1Y	"	"	"	"	"	"	"
		96	"			IN	OUT			"								"	2A to 2Y	"	"	"	"	"	"	"
		97	"					IN	OUT	"								"	3A to 3Y	"	"	"	"	"	"	"
		98	"							"	OUT	IN						"	4A to 4Y	"	"	"	"	"	"	"
		99								"			OUT	IN			GND	"	5A to 5Y	"	"	"	"	"	"	"
		100								"					OUT	IN	GND	"	6A to 6Y	"	"	"	"	"	"	"
t_{PZL}	3003 (Fig. 4)	101	IN	GND	OUT					"								"	E1 to 1Y	"	33	"	44	"	33	"
		102	"			GND	OUT			"								"	E1 to 2Y	"	"	"	"	"	"	"
		103	"					GND	OUT	"								"	E1 to 3Y	"	"	"	"	"	"	"
		104	"							"	OUT	GND						"	E2 to 4Y	"	"	"	"	"	"	"
		105								"			OUT	GND			IN	"	E2 to 5Y	"	"	"	"	"	"	"
		106								"					OUT	GND	IN	"	E2 to 6Y	"	"	"	"	"	"	"
t_{PZH}		107	IN	4.5 V	OUT					"								"	E1 to 1Y	"	"	"	"	"	"	"
		108	"			4.5 V	OUT			"								"	E1 to 2Y	"	"	"	"	"	"	"
		109	"					4.5 V	OUT	"								"	E1 to 3Y	"	"	"	"	"	"	"
		110	"							"	OUT	4.5 V						"	E2 to 4Y	"	"	"	"	"	"	"
		111								"			OUT	4.5 V			IN	"	E2 to 5Y	"	"	"	"	"	"	"
		112								"					OUT	4.5 V	IN	"	E2 to 6Y	"	"	"	"	"	"	"
t_{PLZ}	3003 (Fig. 4)	113	IN	GND	OUT					"								"	E1 to 1Y	"	31	"	41	"	31	"
		114	"			GND	OUT			"								"	E1 to 2Y	"	"	"	"	"	"	"
		115	"					GND	OUT	"								"	E1 to 3Y	"	"	"	"	"	"	"
		116	"							"	OUT	GND						"	E2 to 4Y	"	"	"	"	"	"	"
		117								"			OUT	GND			IN	"	E2 to 5Y	"	"	"	"	"	"	"
		118								"					OUT	GND	IN	"	E2 to 6Y	"	"	"	"	"	"	"
t_{PHZ}	3003 (Fig. 4)	119	IN	4.5 V	OUT					"								"	E1 to 1Y	"	"	"	"	"	"	"
		120	"			4.5 V	OUT			"								"	E1 to 2Y	"	"	"	"	"	"	"
		121	"					4.5 V	OUT	"								"	E1 to 3Y	"	"	"	"	"	"	"
		122	"							"	OUT	4.5 V						"	E2 to 4Y	"	"	"	"	"	"	"
		123								"			OUT	4.5 V			IN	"	E2 to 5Y	"	"	"	"	"	"	"
		124								"					OUT	4.5 V	IN	"	E2 to 6Y	"	"	"	"	"	"	"

See footnotes at end of table.

TABLE III. Group A inspection for device type 08 - Continued.

Symbol	MIL-STD-883 method	Case	Terminal conditions 1/																Measured terminal	Subgroup 9 T_C = +25°C		Subgroup 10 T_C = +125°C		Subgroup 11 T_C = -55°C		Unit
		2	2	3	4	5	7	8	9	10	12	13	14	15	17	18	19	20								
		E	1	2	3	4	5	6	7	8	9	10	11	12	13	14	15	16		Min	Max	Min	Max	Min	Max	
		Test no.	$\overline{E1}$	1A	1Y	2A	2Y	3A	3Y	GND	4Y	4A	5Y	5A	6Y	6A	$\overline{E2}$	V_{CC}								
t_{TLH}	3004 (Fig. 4)	125	GND	IN	OUT					GND								4.5 V	1Y	2	12	2	16	2	12	ns
		126	"			IN	OUT			"								"	2Y	"	"	"	"	"	"	"
		127	"					IN	OUT	"								"	3Y	"	"	"	"	"	"	"
		128	"							"	OUT	IN						"	4Y	"	"	"	"	"	"	"
		129								"			OUT	IN			GND	"	5Y	"	"	"	"	"	"	"
		130								"					OUT	IN	GND	"	6Y	"	"	"	"	"	"	"
t_{THL}	3004 (Fig. 4)	131	GND	IN	OUT					"								"	1Y	"	"	"	"	"	"	"
		132	"			IN	OUT			"								"	2Y	"	"	"	"	"	"	"
		133	"					IN	OUT	"								"	3Y	"	"	"	"	"	"	"
		134	"							"	OUT	IN						"	4Y	"	"	"	"	"	"	"
		135								"			OUT	IN			GND	"	5Y	"	"	"	"	"	"	"
		136								"					OUT	IN	GND	"	6Y	"	"	"	"	"	"	"

See footnotes at end of table.

TABLE III. Group A inspection for device type 09.

Symbol	MIL-STD-883 method	Case	Terminal conditions 1/																Measured terminal	Subgroup 1 T_C = +25°C		Subgroup 2 T_C = +125°C		Subgroup 3 T_C = -55°C		Unit
		2	2	3	4	5	7	8	9	10	12	13	14	15	17	18	19	20								
		E	1	2	3	4	5	6	7	8	9	10	11	12	13	14	15	16								
		Test no.	E1	1A	1Y	2A	2Y	3A	3Y	GND	4Y	4A	5Y	5A	6Y	6A	E2	V_{CC}		Min	Max	Min	Max	Min	Max	
V_{IC} (pos)		1	1 mA							OPEN								GND	E1	1/	1.5					V
		2		1 mA						"								"	1A	"	"					"
		3				1 mA				"								"	2A	"	"					"
		4						1 mA		"								"	3A	"	"					"
		5								"		1 mA						"	4A	"	"					"
		6								"				1 mA				"	5A	"	"					"
		7								"						1 mA		"	6A	"	"					"
		8								"							1 mA	"	E2	"	"					"
V_{IC} (neg)		9	-1 mA							GND								OPEN	E1		-1.5					"
		10		-1 mA						"								"	1A		"					"
		11				-1 mA				"								"	2A		"					"
		12						-1 mA		"								"	3A		"					"
		13								"		-1 mA						"	4A		"					"
		14								"				-1 mA				"	5A		"					"
		15								"						-1 mA		"	6A		"					"
		16								"							-1 mA	"	E2		"					"
I_{CC}	3005	17	GND	GND		GND		GND		"		GND		GND		GND	GND	6 V	V_{CC}		10.2		20			μA
I_{CC}	3005	18	GND	6 V		6 V		6 V		"		6 V		6 V		6 V	GND	"	"		10.2		20			"
I_{CCZ}		19	6 V	6 V		6 V		6 V		"		6 V		GND		GND	GND	"	"		10.1		10			"
		20	GND	GND		GND		GND		"		GND		6 V		6 V	6 V	"	"		10.1		10			"
V_{OH3}	3006	21	1.2 V	1.2 V	-20 μA					"								6 V	1Y	5.95		5.95		5.95		V
		22	"			1.2 V	-20 μA			"								"	2Y	"		"		"		"
		23	"					1.2 V	-20 μA	"								"	3Y	"		"		"		"
		24	"							"	-20 μA	1.2 V						"	4Y	"		"		"		"
		25								"			-20 μA	1.2 V			1.2 V	"	5Y	"		"		"		"
		26								"					-20 μA	1.2 V	1.2 V	"	6Y	"		"		"		"
V_{OH5}	3006	27	1.2 V	1.2 V	-7.8 mA					"								"	1Y	5.48		5.2		5.48		"
		28	"			1.2 V	-7.8 mA			"								"	2Y	"		"		"		"
		29	"					1.2 V	-7.8 mA	"								"	3Y	"		"		"		"
		30	"							"	-7.8 mA	1.2 V						"	4Y	"		"		"		"
		31								"			-7.8 mA	1.2 V			1.2 V	"	5Y	"		"		"		"
		32								"					-7.8 mA	1.2 V	1.2 V	"	6Y	"		"		"		"
V_{OL3}	3007	33	1.2 V	4.2 V	20 μA					"								"	1Y		0.05		0.05		0.05	"
		34	"			4.2 V	20 μA			"								"	2Y		"		"		"	"
		35	"					4.2 V	20 μA	"								"	3Y		"		"		"	"
		36	"							"	20 μA	4.2 V						"	4Y		"		"		"	"
		37								"			20 μA	4.2 V			1.2 V	"	5Y		"		"		"	"
		38								"					20 μA	4.2 V	1.2 V	"	6Y		"		"		"	"
V_{OL5}	3007	39	1.2 V	4.2 V	7.8 mA					"								"	1Y		0.26		0.4		0.26	"
		40	"			4.2 V	7.8 mA			"								"	2Y		"		"		"	"
		41	"					4.2 V	7.8 mA	"								"	3Y		"		"		"	"
		42	"							"	7.8 mA	4.2 V						"	4Y		"		"		"	"
		43								"			7.8 mA	4.2 V			1.2 V	"	5Y		"		"		"	"
		44								"					7.8 mA	4.2 V	1.2 V	"	6Y		"		"		"	"

See footnotes at end of table.

TABLE III. Group A inspection for device type 09 - Continued.

Symbol	MIL-STD-883 method	Case 2 / E / Test no.	Terminal conditions 1/ 2 / 1 / ET	3 / 2 / 1A	4 / 3 / 1Y	5 / 4 / 2A	7 / 5 / 2Y	8 / 6 / 3A	9 / 7 / 3Y	10 / 8 / GND	12 / 9 / 4Y	13 / 10 / 4A	14 / 11 / 5Y	15 / 12 / 5A	17 / 13 / 6Y	18 / 14 / 6A	19 / 15 / E2	20 / 16 / V_{CC}	Measured terminal	Subgroup 1 T_C = +25°C Min	Subgroup 1 Max	Subgroup 2 T_C = +125°C Min	Subgroup 2 Max	Subgroup 3 T_C = -55°C Min	Subgroup 3 Max	Unit
I_{OZH}		45	9/	9/	6 V					GND								6 V	1Y		10.2		2.0			μA
		46	"			9/	6 V			"								"	2Y		"		"			"
		47	"					9/	6 V	"								"	3Y		"		"			"
		48	"							"	6 V	9/						"	4Y		"		"			"
		49								"			6 V	9/			9/	"	5Y		"		"			"
		50								"					6 V	9/	9/	"	6Y		"		"			"
I_{OZL}		51	9/	9/	GND					"								"	1Y		-0.2		-2.0			"
		52	"			9/	GND			"								"	2Y		"		"			"
		53	"					9/	GND	"								"	3Y		"		"			"
		54	"							"	GND	9/						"	4Y		"		"			"
		55								"			GND	9/			9/	"	5Y		"		"			"
		56								"					GND	9/	9/	"	6Y		"		"			"
I_{IH}	3010	57	6 V	GND		GND		GND		"		GND		GND		GND	GND	6 V	E1		.05		0.1			"
		58	GND	6 V		GND		"		"		"		"		"	"	"	1A		"		"			"
		59	"	GND		6 V		"		"		"		"		"	"	"	2A		"		"			"
		60	"	"		GND		6 V		"		"		"		"	"	"	3A		"		"			"
		61	"	"		"		GND		"		6 V		"		"	"	"	4A		"		"			"
		62	"	"		"		"		"		GND		6 V		"	"	"	5A		"		"			"
		63	"	"		"		"		"		"		GND		6 V	"	"	6A		"		"			"
		64	"	"		"		"		"		"		GND		GND	6 V	"	E2		"		"			"
I_{IL}	3009	65	"	6 V		6 V		6 V		"		6 V		6 V		6 V	"	"	E1		-.05		-0.1			"
		66	6 V	GND		6 V		"		"		"		"		"	"	"	1A		"		"			"
		67	"	6 V		GND		"		"		"		"		"	"	"	2A		"		"			"
		68	"	"		6 V		GND		"		"		"		"	"	"	3A		"		"			"
		69	"	"		"		6 V		"		GND		"		"	"	"	4A		"		"			"
		70	"	"		"		"		"		6 V		GND		"	"	"	5A		"		"			"
		71	"	"		"		"		"		"		6 V		GND	"	"	6A		"		"			"
		72	"	"		"		"		"		"		6 V		6 V	GND	"	E2		"		"			"
I_{OS4}	3011	73	GND	GND	GND					"								4 V	1Y	-10	-135	-10	-135	-10	-135	mA
		74	"			GND	GND			"								"	2Y	"	"	"	"	"	"	"
		75	"					GND	GND	"								"	3Y	"	"	"	"	"	"	"
		76	"							"	GND	GND						"	4Y	"	"	"	"	"	"	"
		77								"			GND	GND			GND	"	5Y	"	"	"	"	"	"	"
		78								"					GND	GND	GND	"	6Y	"	"	"	"	"	"	"
		79								"								"								
																				Subgroup 4 T_C = +25°C Min	Max					
C_i	3012	80	2/							GND								GND	E1		10					pF
		81		2/						"								"	1A		"					"
		82				2/				"								"	2A		"					"
		83						2/		"								"	3A		"					"
		84								"		2/						"	4A		"					"
		85								"				2/				"	5A		"					"
		86								"						2/		"	6A		"					"
		87								"							2/	"	E2		"					"

See footnotes at end of table.

TABLE III. Group A inspection for device type 09 - Continued.

Symbol	MIL-STD-883 method	Case	Terminal conditions 1/																	Measured terminal	Subgroup 4 T_C = +25°C						Unit
		2	2	3	4	5	7	8	9	10	12	13	14	15	17	18	19	20								
		E	1	2	3	4	5	6	7	8	9	10	11	12	13	14	15	16			Min	Max				
		Test no.	$\overline{E1}$	1A	1Y	2A	2Y	3A	3Y	GND	4Y	4A	5Y	5A	6Y	6A	$\overline{E2}$	V_{CC}								
C_o		88 89	6 V GND		2/		2/		2/	GND GND	2/		2/		2/		GND 6 V	6 V 6 V	Y's Y's			20 20				pF pF
																					Subgroup 9 T_C = +25°C		Subgroup 10 T_C = +125°C		Subgroup 11 T_C = -55°C		
																					Min	Max	Min	Max	Min	Max	
t_{PHL}	3003 (Fig. 4)	90	GND	IN	OUT	IN	OUT	IN	OUT	"	OUT	IN	OUT	IN	OUT	IN	GND	4.5 V	1A to 1Y		5	22	5	29	5	22	ns
		91	"							"							GND	"	2A to 2Y		"	"	"	"	"	"	"
		92	"							"							GND	"	3A to 3Y		"	"	"	"	"	"	"
		93	"							"							GND	"	4A to 4Y		"	"	"	"	"	"	"
		94	"							"							GND	"	5A to 5Y		"	"	"	"	"	"	"
		95	"							"							GND	"	6A to 6Y		"	"	"	"	"	"	"
t_{PLH}	3003 (Fig. 4)	96	"	IN	OUT	IN	OUT	IN	OUT	"	OUT	IN	OUT	IN	OUT	IN	GND	"	1A to 1Y		"	"	"	"	"	"	"
		97	"							"							GND	"	2A to 2Y		"	"	"	"	"	"	"
		98	"							"							GND	"	3A to 3Y		"	"	"	"	"	"	"
		99	"							"							GND	"	4A to 4Y		"	"	"	"	"	"	"
		100								"							GND	"	5A to 5Y		"	"	"	"	"	"	"
		101								"							GND	"	6A to 6Y		"	"	"	"	"	"	"
t_{PZL}	3003 (Fig. 4)	102	IN	4.5 V	OUT	4.5 V	OUT	4.5 V	OUT	"	OUT	4.5 V	OUT	4.5 V	OUT	4.5 V	IN	"	$\overline{E1}$ to 1Y		"	33	"	44	"	33	"
		103	"							"							IN	"	$\overline{E1}$ to 2Y		"	"	"	"	"	"	"
		104	"							"							IN	"	$\overline{E1}$ to 3Y		"	"	"	"	"	"	"
		105	"							"							IN	"	$\overline{E2}$ to 4Y		"	"	"	"	"	"	"
		106								"							IN	"	$\overline{E2}$ to 5Y		"	"	"	"	"	"	"
		107								"							IN	"	$\overline{E2}$ to 6Y		"	"	"	"	"	"	"
t_{PZH}	3003 (Fig. 4)	108	IN	GND	OUT	GND	OUT	GND	OUT	"	OUT	GND	OUT	GND	OUT	GND	IN	"	$\overline{E1}$ to 1Y		"	"	"	"	"	"	"
		109	"							"							IN	"	$\overline{E1}$ to 2Y		"	"	"	"	"	"	"
		110	"							"							IN	"	$\overline{E1}$ to 3Y		"	"	"	"	"	"	"
		111	"							"							IN	"	$\overline{E2}$ to 4Y		"	"	"	"	"	"	"
		112								"							IN	"	$\overline{E2}$ to 5Y		"	"	"	"	"	"	"
		113								"							IN	"	$\overline{E2}$ to 6Y		"	"	"	"	"	"	"
t_{PLZ}	3003 (Fig. 4)	114	IN	4.5 V	OUT	4.5 V	OUT	4.5 V	OUT	"	OUT	4.5 V	OUT	4.5 V	OUT	4.5 V	IN	"	$\overline{E1}$ to 1Y		"	31	"	41	"	31	"
		115	"							"							IN	"	$\overline{E1}$ to 2Y		"	"	"	"	"	"	"
		116	"							"							IN	"	$\overline{E1}$ to 3Y		"	"	"	"	"	"	"
		117	"							"							IN	"	$\overline{E2}$ to 4Y		"	"	"	"	"	"	"
		118								"							IN	"	$\overline{E2}$ to 5Y		"	"	"	"	"	"	"
		119								"							IN	"	$\overline{E2}$ to 6Y		"	"	"	"	"	"	"
t_{PHZ}		120	IN	GND	OUT	GND	OUT	GND	OUT	"	OUT	GND	OUT	GND	OUT	GND	IN	"	$\overline{E1}$ to 1Y		"	"	"	"	"	"	"
		121	"							"							IN	"	$\overline{E1}$ to 2Y		"	"	"	"	"	"	"
		122	"							"							IN	"	$\overline{E1}$ to 3Y		"	"	"	"	"	"	"
		123	"							"							IN	"	$\overline{E2}$ to 4Y		"	"	"	"	"	"	"
		124	"							"							IN	"	$\overline{E2}$ to 5Y		"	"	"	"	"	"	"
		125	"							"							IN	"	$\overline{E2}$ to 6Y		"	"	"	"	"	"	"

See footnotes at end of table.

TABLE III. Group A inspection for device type 09 - Continued.

Symbol	MIL-STD-883 method	Case	Terminal conditions 1/																Measured terminal	Subgroup 9 T_C = +25°C		Subgroup 10 T_C = +125°C		Subgroup 11 T_C = -55°C		Unit
		2	2	3	4	5	7	8	9	10	12	13	14	15	17	18	19	20								
		E	1	2	3	4	5	6	7	8	9	10	11	12	13	14	15	16								
		Test no.	$\overline{E1}$	1A	1Y	2A	2Y	3A	3Y	GND	4Y	4A	5Y	5A	6Y	6A	$\overline{E2}$	V_{CC}		Min	Max	Min	Max	Min	Max	
t_{TLH}	3004 (Fig. 4)	126	GND	IN	OUT					GND								4.5 V	1Y	2	12	2	16	2	12	ns
		127	"			IN	OUT			"								"	2Y	"	"	"	"	"	"	"
		128	"					IN	OUT	"								"	3Y	"	"	"	"	"	"	"
		129	"							"	OUT	IN						"	4Y	"	"	"	"	"	"	"
		130								"			OUT	IN			GND	"	5Y	"	"	"	"	"	"	"
		131								"					OUT	IN	GND	"	6Y	"	"	"	"	"	"	"
t_{THL}	3004 (Fig. 4)	132	GND	IN	OUT					"								"	1Y	"	"	"	"	"	"	"
		133	"			IN	OUT			"								"	2Y	"	"	"	"	"	"	"
		134	"					IN	OUT	"								"	3Y	"	"	"	"	"	"	"
		135	"							"	OUT	IN						"	4Y	"	"	"	"	"	"	"
		136								"			OUT	IN			GND	"	5Y	"	"	"	"	"	"	"
		137								"					OUT	IN	GND	"	6Y	"	"	"	"	"	"	"

See footnotes at end of table.

TABLE III. Group A inspection for device type 10.

Symbol	MIL-STD-883 method	Cases 2 and H	Terminal conditions 1/																				Measured terminal	Test limits						Unit
			1	2	3	4	5	6	7	8	9	10	11	12	13	14	15	16	17	18	19	20		Subgroup 1 T_C = +25°C		Subgroup 2 T_C = +125°C		Subgroup 3 T_C = -55°C		
		Test no.	1G	1A	2A	3A	4A	5A	6A	7A	8A	GND	8Y	7Y	6Y	5Y	4Y	3Y	2Y	1Y	2G	V_{CC}		Min	Max	Min	Max	Min	Max	
V_{IC} (pos)		1	1 mA									OPEN										GND	1G	1/	1.5					V
		2		1 mA								"										"	1A	"	"					"
		3			1 mA							"										"	2A	"	"					"
		4				1 mA						"										"	3A	"	"					"
		5					1 mA					"										"	4A	"	"					"
		6						1 mA				"										"	5A	"	"					"
		7							1 mA			"										"	6A	"	"					"
		8								1 mA		"										"	7A	"	"					"
		9									1 mA	"										"	8A	"	"					"
		10										"									1 mA	"	2G	"	"					"
V_{IC} (neg)		11	-1 mA									GND										OPEN	1G		1.5					"
		12		-1 mA								"										"	1A		"					"
		13			-1 mA							"										"	2A		"					"
		14				-1 mA						"										"	3A		"					"
		15					-1 mA					"										"	4A		"					"
		16						-1 mA				"										"	5A		"					"
		17							-1 mA			"										"	6A		"					"
		18								-1 mA		"										"	7A		"					"
		19									-1 mA	"										"	8A		"					"
		20										"									-1 mA	"	2G		"					"
I_{CC}	3005	21	GND	GND	GND	GND	GND	GND	GND	GND	GND	"									GND	6 V	V_{CC}		0.2		20			μA
I_{CC}	3006	22	GND	6 V	6 V	6 V	6 V	6 V	6 V	6 V	6 V	"									"	"	"		0.2		20			"
I_{CC2}		23	6 V	6 V	6 V	6 V	5 V	GND	GND	GND	GND	"									"	"	"		0.1		10			"
		24	GND	GND	GND	GND	GND	6 V	6 V	6 V	6 V	"									5 V	"	"		0.1		10			"
V_{OH3}	3006	25	1.2 V	1.2 V								"								-20 μA	1.2 V	"	1Y	5.95		5.95		5.95		V
		26	"		1.2 V							"							-20 μA		"	"	2Y	"		"		"		"
		27	"			1.2 V						"						-20 μA			"	"	3Y	"		"		"		"
		28	"				1.2 V					"					-20 μA				"	"	4Y	"		"		"		"
		29	"					1.2 V				"				-20 μA					"	"	5Y	"		"		"		"
		30	"						1.2 V			"			20 μA						"	"	6Y	"		"		"		"
		31	"							1.2 V		"		-20 μA							"	"	7Y	"		"		"		"
		32	"								1.2 V	"	-20 μA								"	"	8Y	"		"		"		"
V_{OH5}	3006	33	"	1.2 V								"								-7.8 mA	"	"	1Y	5.49		5.2		5.49		"
		34	"		1.2 V							"							-7.8 mA		"	"	2Y	"		"		"		"
		35	"			1.2 V						"						-7.8 mA			"	"	3Y	"		"		"		"
		36	"				1.2 V					"					-7.8 mA				"	"	4Y	"		"		"		"
		37	"					1.2 V				"				-7.8 mA					"	"	5Y	"		"		"		"
		38	"						1.2 V			"			-7.8 mA						"	"	6Y	"		"		"		"
		39	"							1.2 V		"		-7.8 mA							"	"	7Y	"		"		"		"
		40	"								1.2 V	"	-7.8 mA								"	"	8Y	"		"		"		"
V_{OL3}	3007	41	"	4.2 V								"								20 μA	"	"	1Y		0.05		0.05		0.05	"
		42	"		4.2 V							"							20 μA		"	"	2Y		"		"		"	"
		43	"			4.2 V						"						20 μA			"	"	3Y		"		"		"	"
		44	"				4.2 V					"					20 μA				"	"	4Y		"		"		"	"
		45	"					4.2 V				"				20 μA					"	"	5Y		"		"		"	"
		46	"						4.2 V			"			20 μA						"	"	6Y		"		"		"	"
		47	"							4.2 V		"		20 μA							"	"	7Y		"		"		"	"
		48	"								4.2 V	"	20 μA								"	"	8Y		"		"		"	"

See footnotes at end of table.

TABLE III. Group A inspection for device type 10 - Continued.

Symbol	MIL-STD-883 method	Cases 2 and H	Terminal conditions 17																				Measured terminal	Test limits						Unit
			1	2	3	4	5	6	7	8	9	10	11	12	13	14	15	16	17	18	19	20		Subgroup 1 T_C = +25°C		Subgroup 2 T_C = +125°C		Subgroup 3 T_C = -55°C		
		Test no.	1G	1A	2A	3A	4A	5A	6A	7A	8A	GND	8Y	7Y	6Y	5Y	4Y	3Y	2Y	1Y	2G	V_{CC}		Min	Max	Min	Max	Min	Max	
V_{OL5}	3007	49	1.2 V	4.2 V								GND									1.2 V	6 V	1Y		0.26		0.4		0.26	V
		50	"		4.2 V							"							7.8 mA	7.8 mA	"	"	2Y		"		"		"	"
		51	"			4.2 V						"						7.8 mA			"	"	3Y		"		"		"	"
		52	"				4.2 V					"					7.8 mA				"	"	4Y		"		"		"	"
		53	"					4.2 V				"				7.8 mA					"	"	5Y		"		"		"	"
		54	"						4.2 V			"			7.8 mA						"	"	6Y		"		"		"	"
		55	"							4.2 V		"		7.8 mA							"	"	7Y		"		"		"	"
		56	"								4.2 V	"	7.8 mA								"	"	8Y		"		"		"	"
I_{OZH}		57	0.8 V	9/								"									9/	"	1Y		0.2		2.0			μA
		58	"		9/							"							6 V	6 V	"	"	2Y		"		"			"
		59	"			9/						"						6 V			"	"	3Y		"		"			"
		60	"				9/					"					6 V				"	"	4Y		"		"			"
		61	"					9/				"				6 V					"	"	5Y		"		"			"
		62	"						9/			"			6 V						"	"	6Y		"		"			"
		63	"							9/		"		6 V							"	"	7Y		"		"			"
		64	"								9/	"	6 V								"	"	8Y		"		"			"
I_{OZL}		65	9/	9/							/	"									0.6 V	"	1Y		-0.2		2.0			"
		66	"		9/							"							GND	GND	"	"	2Y		"		"			"
		67	"			9/						"						GND			"	"	3Y		"		"			"
		68	"				9/					"					GND				"	"	4Y		"		"			"
		69	"					9/				"				GND					"	"	5Y		"		"			"
		70	"						9/			"			GND						"	"	6Y		"		"			"
		71	"							9/		"		GND							"	"	7Y		"		"			"
		72	"								9/	"	GND								"	"	8Y		"		"			"
I_{IH}	3010	73	6 V	GND	GND	GND	GND	GND	GND	GND	GND	"									GND	6 V	1G		.05		0.1			"
		74	GND	6 V	"	"	"	"	"	"	"	"									"	"	1A		"		"			"
		75	"	GND	6 V	"	"	"	"	"	"	"									"	"	2A		"		"			"
		76	"	"	GND	6 V	"	"	"	"	"	"									"	"	3A		"		"			"
		77	"	"	"	GND	6 V	"	"	"	"	"									"	"	4A		"		"			"
		78	"	"	"	"	GND	6 V	"	"	"	"									"	"	5A		"		"			"
		79	"	"	"	"	"	GND	6 V	"	"	"									"	"	6A		"		"			"
		80	"	"	"	"	"	"	GND	6 V	"	"									"	"	7A		"		"			"
		81	"	"	"	"	"	"	"	GND	6 V	"									"	"	8A		"		"			"
		82								GND	GND										5 V	"	2G		"		"			"
I_{IL}	3009	83	GND	6 V	6 V	6 V	6 V	6 V	6 V	6 V	6 V	"									"	"	1G		.05		0.1			"
		84	6 V	GND	"	"	"	"	"	"	"	"									"	"	1A		"		"			"
		85	"	6 V	GND	"	"	"	"	"	"	"									"	"	2A		"		"			"
		86	"	"	6 V	GND	"	"	"	"	"	"									"	"	3A		"		"			"
		87	"	"	"	6 V	GND	"	"	"	"	"									"	"	4A		"		"			"
		88	"	"	"	"	6 V	GND	"	"	"	"									"	"	5A		"		"			"
		89	"	"	"	"	"	6 V	GND	"	"	"									"	"	6A		"		"			"
		90	"	"	"	"	"	"	6 V	GND	"	"									"	"	7A		"		"			"
		91	"	"	"	"	"	"	"	6 V	GND	"									"	"	8A		"		"			"
		92	"	"	"	"	"	"	"	6 V	6 V	"									GND	"	2G		"		"			"

See footnotes at end of table.

TABLE III. Group A inspection for device type 10 - Continued.

Symbol	MIL-STD-883 method	Cases 2 and R	Terminal conditions 1/																					Measured terminal	Test limits						Unit
			1	2	3	4	5	6	7	8	9	10	11	12	13	14	15	16	17	18	19	20			Subgroup 1 T_C = +25°C		Subgroup 2 T_C = +125°C		Subgroup 3 T_C = -55°C		
		Test no.	1G	1A	2A	3A	4A	5A	6A	7A	8A	GND	8Y	7Y	6Y	5Y	4Y	3Y	2Y	1Y	2G	V_{CC}			Min	Max	Min	Max	Min	Max	
I_{OS4}	3011	93	GND	GND								GND								GND	GND	4 V	1Y		-10	-135	-10	-135	-10	-135	mA
		94	"		GND							"							GND		"	"	2Y		"	"	"	"	"	"	"
		95	"			GND						"						GND			"	"	3Y		"	"	"	"	"	"	"
		96	"				GND					"					GND				"	"	4Y		"	"	"	"	"	"	"
		97	"					GND				"				GND					"	"	5Y		"	"	"	"	"	"	"
		98	"						GND			"			GND						"	"	6Y		"	"	"	"	"	"	"
		99	"							GND		"		GND							"	"	7Y		"	"	"	"	"	"	"
		100	"								GND	"	GND								"	"	8Y		"	"	"	"	"	"	"
																									Subgroup 4 T_C = +25°C						
																									Min	Max					
C_I	3012	101	2/									GND									GND	6 V	1G			10					pF
		102		2/								"									"	"	1A			"					"
		103			2/							"									"	"	2A			"					"
		104				2/						"									"	"	3A			"					"
		105					2/					"									"	"	4A			"					"
		106						2/				"									"	"	5A			"					"
		107							2/			"									"	"	6A			"					"
		108								2/		"									"	"	7A			"					"
		109									2/	"									"	"	8A			"					"
		110										"								2/	"	"	2G			"					"
C_O		111										"	2/	2/	2/	2/	2/	2/	2/	2/	6 V	6 V	Y's			20					"
		112	6 V									"										6 V	Y's			20					"
																									Subgroup 7 T_C = +25°C		Subgroup 8 T_C = +125°C		Subgroup 8 T_C = -55°C		
																									Min	Max	Min	Max	Min	Max	
Truth table 6/		113	B	B	B	B	B	B	B	B	B	GND	H	H	H	H	H	H	H	H	B	4.5 V	7/								
		114	B	A	A	A	A	A	A	A	A	"	L	L	L	L	L	L	L	L	B	4.5 V	7/								
																									Subgroup 9 T_C = +25°C		Subgroup 10 T_C = +125°C		Subgroup 11 T_C = -55°C		
																									Min	Max	Min	Max	Min	Max	
t_{PHL}	3003 (Fig. 4)	115	GND	IN								GND									GND	4.5 V	1A to 1Y		8	22	8	29	8	22	ns
		116	"		IN							"							OUT	OUT	"	"	2A to 2Y		"	"	"	"	"	"	"
		117	"			IN						"						OUT			"	"	3A to 3Y		"	"	"	"	"	"	"
		118	"				IN					"					OUT				"	"	4A to 4Y		"	"	"	"	"	"	"
		119	"					IN				"				OUT					"	"	5A to 5Y		"	"	"	"	"	"	"
		120	"						IN			"			OUT						"	"	6A to 6Y		"	"	"	"	"	"	"
		121	"							IN		"		OUT							"	"	7A to 7Y		"	"	"	"	"	"	"
		122	"								IN	"	OUT								"	"	8A to 8Y		"	"	"	"	"	"	"
t_{PLH}	3003 (Fig. 4)	123	"	IN								"									"	"	1A to 1Y		"	"	"	"	"	"	"
		124	"		IN							"							OUT	OUT	"	"	2A to 2Y		"	"	"	"	"	"	"
		125	"			IN						"						OUT			"	"	3A to 3Y		"	"	"	"	"	"	"
		126	"				IN					"					OUT				"	"	4A to 4Y		"	"	"	"	"	"	"
		127	"					IN				"				OUT					"	"	5A to 5Y		"	"	"	"	"	"	"
		128	"						IN			"			OUT						"	"	6A to 6Y		"	"	"	"	"	"	"
		129	"							IN		"		OUT							"	"	7A to 7Y		"	"	"	"	"	"	"
		130	"								IN	"	OUT								"	"	8A to 8Y		"	"	"	"	"	"	"

See footnotes at end of table.

TABLE III. Group A inspection for device type 10 - Continued.

Symbol	MIL-STD-883 method	Cases 2 and R	Terminal conditions 1/																				Measured terminal	Test limits						Unit
			1	2	3	4	5	6	7	8	9	10	11	12	13	14	15	16	17	18	19	20		Subgroup 1 T_C = +25°C		Subgroup 2 T_C = +125°C		Subgroup 3 T_C = -55°C		
		Test no.	1G	1A	2A	3A	4A	5A	6A	7A	8A	GND	8Y	7Y	6Y	5Y	4Y	3Y	2Y	1Y	2G	V_{CC}		Min	Max	Min	Max	Min	Max	
t_{PZH}	3003 (Fig. 4)	131	IN	GND	GND							GND								OUT	GND	4.5 V	1G to 1Y	8	31	8	41	8	31	ns
		132	"									"							OUT		"	"	1G to 2Y	"	"	"	"	"	"	"
		133	"			GND						"						OUT			"	"	1G to 3Y	"	"	"	"	"	"	"
		134	"				GND					"					OUT				"	"	1G to 4Y	"	"	"	"	"	"	"
		135	"					GND				"				OUT					"	"	1G to 5Y	"	"	"	"	"	"	"
		136	"						GND			"			OUT						"	"	1G to 6Y	"	"	"	"	"	"	"
		137	"							GND		"		OUT							"	"	1G to 7Y	"	"	"	"	"	"	"
		138	"								GND	"	OUT								"	"	1G to 8Y	"	"	"	"	"	"	"
		139	GND	GND	GND							"								OUT	IN	"	2G to 1Y	"	"	"	"	"	"	"
		140	"			GND						"							OUT		"	"	2G to 2Y	"	"	"	"	"	"	"
		141	"				GND					"						OUT			"	"	2G to 3Y	"	"	"	"	"	"	"
		142	"					GND				"					OUT				"	"	2G to 4Y	"	"	"	"	"	"	"
		143	"						GND			"				OUT					"	"	2G to 5Y	"	"	"	"	"	"	"
		144	"							GND		"			OUT						"	"	2G to 6Y	"	"	"	"	"	"	"
		145	"								GND	"		OUT							"	"	2G to 7Y	"	"	"	"	"	"	"
		146	"									"	OUT								"	"	2G to 8Y	"	"	"	"	"	"	"
t_{PZL}	3003 (Fig. 4)	147	IN	4.5 V	4.5 V							"								OUT	GND	"	1G to 1Y	"	"	"	"	"	"	"
		148	"			4.5 V						"							OUT		"	"	1G to 2Y	"	"	"	"	"	"	"
		149	"				4.5 V					"						OUT			"	"	1G to 3Y	"	"	"	"	"	"	"
		150	"					4.5 V				"					OUT				"	"	1G to 4Y	"	"	"	"	"	"	"
		151	"						4.5 V			"				OUT					"	"	1G to 5Y	"	"	"	"	"	"	"
		152	"							4.5 V		"			OUT						"	"	1G to 6Y	"	"	"	"	"	"	"
		153	"								4.5 V	"		OUT							"	"	1G to 7Y	"	"	"	"	"	"	"
		154	"									"	OUT								"	"	1G to 8Y	"	"	"	"	"	"	"
		155	GND	4.5 V	4.5 V							"								OUT	IN	"	2G to 1Y	"	"	"	"	"	"	"
		156	"			4.5 V						"							OUT		"	"	2G to 2Y	"	"	"	"	"	"	"
		157	"				4.5 V					"						OUT			"	"	2G to 3Y	"	"	"	"	"	"	"
		158	"					4.5 V				"					OUT				"	"	2G to 4Y	"	"	"	"	"	"	"
		159	"						4.5 V			"				OUT					"	"	2G to 5Y	"	"	"	"	"	"	"
		160	"							4.5 V		"			OUT						"	"	2G to 6Y	"	"	"	"	"	"	"
		161	"								4.5 V	"		OUT							"	"	2G to 7Y	"	"	"	"	"	"	"
		162	"									"	OUT								"	"	2G to 8Y	"	"	"	"	"	"	"
t_{PLZ}	3003 (Fig. 4)	163	IN	4.5 V	4.5 V							"								OUT	GND	"	1G to 1Y	"	"	"	"	"	"	"
		164	"			4.5 V						"							OUT		"	"	1G to 2Y	"	"	"	"	"	"	"
		165	"				4.5 V					"						OUT			"	"	1G to 3Y	"	"	"	"	"	"	"
		166	"					4.5 V				"					OUT				"	"	1G to 4Y	"	"	"	"	"	"	"
		167	"						4.5 V			"				OUT					"	"	1G to 5Y	"	"	"	"	"	"	"
		168	"							4.5 V		"			OUT						"	"	1G to 6Y	"	"	"	"	"	"	"
		169	"								4.5 V	"		OUT							"	"	1G to 7Y	"	"	"	"	"	"	"
		170	"									"	OUT								"	"	1G to 8Y	"	"	"	"	"	"	"
		171	GND	4.5 V	4.5 V							"								OUT	IN	"	2G to 1Y	"	"	"	"	"	"	"
		172	"			4.5 V						"							OUT		"	"	2G to 2Y	"	"	"	"	"	"	"
		173	"				4.5 V					"						OUT			"	"	2G to 3Y	"	"	"	"	"	"	"
		174	"					4.5 V				"					OUT				"	"	2G to 4Y	"	"	"	"	"	"	"
		175	"						4.5 V			"				OUT					"	"	2G to 5Y	"	"	"	"	"	"	"
		176	"							4.5 V		"			OUT						"	"	2G to 6Y	"	"	"	"	"	"	"
		177	"								4.5 V	"		OUT							"	"	2G to 7Y	"	"	"	"	"	"	"
		178	"									"	OUT								"	"	2G to 8Y	"	"	"	"	"	"	"
t_{PHZ}	3003 (Fig. 4)	179	IN	GND	GND							"								OUT	GND	"	1G to 1Y	"	"	"	"	"	"	"
		180	"			GND						"							OUT		"	"	1G to 2Y	"	"	"	"	"	"	"
		181	"				GND					"						OUT			"	"	1G to 3Y	"	"	"	"	"	"	"
		182	"					GND				"					OUT				"	"	1G to 4Y	"	"	"	"	"	"	"
		183	"						GND			"				OUT					"	"	1G to 5Y	"	"	"	"	"	"	"
		184	"							GND		"			OUT						"	"	1G to 6Y	"	"	"	"	"	"	"
		185	"								GND	"		OUT							"	"	1G to 7Y	"	"	"	"	"	"	"
		186	"									"	OUT								"	"	1G to 8Y	"	"	"	"	"	"	"

See footnotes at end of table.

TABLE III. Group A inspection for device type 10 - Continued.

Symbol	MIL-STD-883 method	Cases 2 and R	Terminal conditions 1/																					Measured terminal	Test Limits						Unit
			1	2	3	4	5	6	7	8	9	10	11	12	13	14	15	16	17	18	19	20			Subgroup 1 T_C = +25°C		Subgroup 2 T_C = +125°C		Subgroup 3 T_C = -55°C		
		Test no.	1G	1A	2A	3A	4A	5A	6A	7A	8A	GND	8Y	7Y	6Y	5Y	4Y	3Y	2Y	1Y	2G	V_{CC}			Min	Max	Min	Max	Min	Max	
t_{PHZ}	3003 (Fig. 4)	187	GND	GND								GND									IN	4.5 V	2G to 1Y	8	31	8	41	8	31	ns
		188	"		GND							"							OUT	OUT	"	"	2G to 2Y	"	"	"	"	"	"	"
		189	"			GND						"						OUT			"	"	2G to 3Y	"	"	"	"	"	"	"
		190	"				GND					"					OUT				"	"	2G to 4Y	"	"	"	"	"	"	"
		191	"					GND				"				OUT					"	"	2G to 5Y	"	"	"	"	"	"	"
		192	"						GND			"			OUT						"	"	2G to 6Y	"	"	"	"	"	"	"
		193	"							GND		"		OUT							"	"	2G to 7Y	"	"	"	"	"	"	"
		194	"								GND	"	OUT								"	"	2G to 8Y	"	"	"	"	"	"	"
t_{TLH}	3004 (Fig. 4)	195	"	IN								"									GND	"	1Y	2	12	2	16	2	12	"
		196	"		IN							"							OUT	OUT	"	"	2Y	"	"	"	"	"	"	"
		197	"			IN						"						OUT			"	"	3Y	"	"	"	"	"	"	"
		198	"				IN					"					OUT				"	"	4Y	"	"	"	"	"	"	"
		199	"					IN				"				OUT					"	"	5Y	"	"	"	"	"	"	"
		200	"						IN			"			OUT						"	"	6Y	"	"	"	"	"	"	"
		201	"							IN		"		OUT							"	"	7Y	"	"	"	"	"	"	"
		202	"								IN	"	OUT								"	"	8Y	"	"	"	"	"	"	"
t_{THL}	3004 (Fig. 4)	203	"	IN								"									"	"	1Y	"	"	"	"	"	"	"
		204	"		IN							"							OUT	OUT	"	"	2Y	"	"	"	"	"	"	"
		205	"			IN						"						OUT			"	"	3Y	"	"	"	"	"	"	"
		206	"				IN					"					OUT				"	"	4Y	"	"	"	"	"	"	"
		207	"					IN				"				OUT					"	"	5Y	"	"	"	"	"	"	"
		208	"						IN			"			OUT						"	"	6Y	"	"	"	"	"	"	"
		209	"							IN		"		OUT							"	"	7Y	"	"	"	"	"	"	"
		210	"								IN	"	OUT								"	"	8Y	"	"	"	"	"	"	"

See footnotes at end of table.

TABLE III. Group A inspection for device type 11.

Symbol	MIL-STD-883 method	Cases 2 and R	Terminal conditions 1/																				Measured terminal	Test limits						Unit
			1	2	3	4	5	6	7	8	9	10	11	12	13	14	15	16	17	18	19	20		Subgroup 1 T_C = +25°C		Subgroup 2 T_C = +125°C		Subgroup 3 T_C = -55°C		
		Test no.	1G	1A	2A	3A	4A	5A	6A	7A	8A	GND	8Y	7Y	6Y	5Y	4Y	3Y	2Y	1Y	2G	V_{CC}		Min	Max	Min	Max	Min	Max	
V_{IC} (pos)		1	1 mA									OPEN										GND	1G	1/	1.5					V
		2		1 mA								"										"	1A	"	"					"
		3			1 mA							"										"	2A	"	"					"
		4				1 mA						"										"	3A	"	"					"
		5					1 mA					"										"	4A	"	"					"
		6						1 mA				"										"	5A	"	"					"
		7							1 mA			"										"	6A	"	"					"
		8								1 mA		"										"	7A	"	"					"
		9									1 mA	"										"	8A	"	"					"
		10										"									1 mA	"	2G	"	"					"
V_{IC} (neg)		11	-1 mA									GND										OPEN	1G		-1.5					"
		12		-1 mA								"										"	1A		"					"
		13			-1 mA							"										"	2A		"					"
		14				-1 mA						"										"	3A		"					"
		15					-1 mA					"										"	4A		"					"
		16						-1 mA				"										"	5A		"					"
		17							-1 mA			"										"	6A		"					"
		18								-1 mA		"										"	7A		"					"
		19									-1 mA	"										"	8A		"					"
		20										"									-1 mA	"	2G		"					"
I_{CCH}	3005	21	GND	6 V	6 V	6 V	6 V	6 V	6 V	6 V	6 V	"									GND	6 V	V_{CC}		0.2		20			μA
I_{CCL}	3006	22	GND	GND	GND	GND	GND	GND	GND	GND	GND	"									"	"	"		0.2		20			"
I_{CCZ}		23	6 V	GND	GND	GND	GND	6 V	6 V	6 V	6 V	"									"	"	"		0.1		10			"
		24	GND	6 V	6 V	6 V	6 V	GND	GND	GND	GND	"									6 V	"	"		0.1		10			"
V_{OH3}	3006	25	1.2 V	4.2 V								"									1.2 V	"	1Y	5.95		5.95		5.95		V
		26	"		4.2 V							"									"	"	2Y	"		"		"		"
		27	"			4.2 V						"									"	"	3Y	"		"		"		"
		28	"				4.2 V					"									"	"	4Y	"		"		"		"
		29	"					4.2 V				"									"	"	5Y	"		"		"		"
		30	"						4.2 V			"									"	"	6Y	"		"		"		"
		31	"							4.2 V		"									"	"	7Y	"		"		"		"
		32	"								4.2 V	"	-20 μA	-20 μA	20 μA	-20 μA	-20 μA	-20 μA	-20 μA	-20 μA	"	"	8Y	"		"		"		"
V_{OH5}	3006	33	"	4.2 V								"									4.2 V	"	1Y	5.49		5.2		5.49		"
		34	"		4.2 V							"									"	"	2Y	"		"		"		"
		35	"			4.2 V						"									"	"	3Y	"		"		"		"
		36	"				4.2 V					"									"	"	4Y	"		"		"		"
		37	"					4.2 V				"									"	"	5Y	"		"		"		"
		38	"						4.2 V			"									"	"	6Y	"		"		"		"
		39	"							4.2 V		"									"	"	7Y	"		"		"		"
		40	"								4.2 V	"	-7.8 mA	-7.8 mA	-7.8 mA	7.8 mA	-7.8 mA	-7.8 mA	-7.8 mA	-7.9 mA	"	"	8Y	"		"		"		"
V_{OL3}	3007	41	"	1.2 V								"									1.2 V	"	1Y		0.05		0.05		0.05	"
		42	"		1.2 V							"									"	"	2Y		"		"		"	"
		43	"			1.2 V						"									"	"	3Y		"		"		"	"
		44	"				1.2 V					"									"	"	4Y		"		"		"	"
		45	"					1.2 V				"									"	"	5Y		"		"		"	"
		46	"						1.2 V			"									"	"	6Y		"		"		"	"
		47	"							1.2 V		"									"	"	7Y		"		"		"	"
		48	"								1.2 V	"	20 μA	20 μA	20 μA	20 μA	20 μA	20 μA	20 μA	20 μA	"	"	8Y		"		"		"	"

See footnotes at end of table.

TABLE III. Group A inspection for device type 11 - Continued.

Symbol	MIL-STD-883 method	Cases 2 and R	Terminal conditions 1/																				Measured terminal	Test limits						Unit
			1	2	3	4	5	6	7	8	9	10	11	12	13	14	15	16	17	18	19	20		Subgroup 1 T_C = +25°C		Subgroup 2 T_C = +125°C		Subgroup 3 T_C = -55°C		
		Test no.	1G	1A	2A	3A	4A	5A	6A	7A	8A	GND	8Y	7Y	6Y	5Y	4Y	3Y	2Y	1Y	2G	V_{CC}		Min	Max	Min	Max	Min	Max	
V_{OL5}	3007	49	1.2 V	1.2 V								GND								7.8 mA	1.2 V	6 V	1Y		0.26		0.4		0.26	V
		50	"		1.2 V							"							7.8 mA		"	"	2Y		"		"		"	"
		51	"			1.2 V						"						7.8 mA			"	"	3Y		"		"		"	"
		52	"				1.2 V					"					7.8 mA				"	"	4Y		"		"		"	"
		53	"					1.2 V				"				7.8 mA					"	"	5Y		"		"		"	"
		54	"						1.2 V			"			7.8 mA						"	"	6Y		"		"		"	"
		55	"							1.2 V		"		7.8 mA							"	"	7Y		"		"		"	"
		56	"								1.2 V	"	7.8 mA								"	"	8Y		"		"		"	"
I_{OZH}		57	9/	9/								"								6 V	9/	"	1Y		0.2		2.0			μA
		58	"		9/							"							6 V		"	"	2Y		"		"			"
		59	"			9/						"						6 V			"	"	3Y		"		"			"
		60	"				9/					"					6 V				"	"	4Y		"		"			"
		61	"					9/				"				6 V					"	"	5Y		"		"			"
		62	"						9/			"			6 V						"	"	6Y		"		"			"
		63	"							9/		"		6 V							"	"	7Y		"		"			"
		64	"								9/	"	6 V								"	"	8Y		"		"			"
I_{OZL}		65	9/	9/								"								GND	0.8 V	"	1Y		0.2		2.0			"
		66	"		9/							"							GND		"	"	2Y		"		"			"
		67	"			9/						"						GND			"	"	3Y		"		"			"
		68	"				9/					"					GND				"	"	4Y		"		"			"
		69	"					9/				"				GND					"	"	5Y		"		"			"
		70	"						9/			"			GND						"	"	6Y		"		"			"
		71	"							9/		"		GND							"	"	7Y		"		"			"
		72	"								9/	"	GND								"	"	8Y		"		"			"
I_{IH}	3010	73	6 V	GND	GND	GND	GND	GND	GND	GND	GND	"									GND	6 V	1G		.05		0.1			"
		74	GND	6 V	"	"	"	"	"	"	"	"									"	"	1A		"		"			"
		75	"	GND	6 V	"	"	"	"	"	"	"									"	"	2A		"		"			"
		76	"	"	GND	6 V	"	"	"	"	"	"									"	"	3A		"		"			"
		77	"	"	"	GND	6 V	"	"	"	"	"									"	"	4A		"		"			"
		78	"	"	"	"	GND	6 V	"	"	"	"									"	"	5A		"		"			"
		79	"	"	"	"	"	GND	6 V	"	"	"									"	"	6A		"		"			"
		80	"	"	"	"	"	"	GND	6 V	"	"									"	"	7A		"		"			"
		81	"	"	"	"	"	"	"	GND	6 V	"									"	"	8A		"		"			"
		82	"	"	"	"	"	"	"	GND	GND	"									6 V	"	2G		"		"			"
I_{IL}	3009	83	"	6 V	6 V	6 V	6 V	6 V	6 V	6 V	6 V	"									"	"	1G		.05		0.1			"
		84	6 V	GND	"	"	"	"	"	"	"	"									"	"	1A		"		"			"
		85	"	6 V	GND	"	"	"	"	"	"	"									"	"	2A		"		"			"
		86	"	"	6 V	GND	"	"	"	"	"	"									"	"	3A		"		"			"
		87	"	"	"	6 V	GND	"	"	"	"	"									"	"	4A		"		"			"
		88	"	"	"	"	6 V	GND	"	"	"	"									"	"	5A		"		"			"
		89	"	"	"	"	"	6 V	GND	"	"	"									"	"	6A		"		"			"
		90	"	"	"	"	"	"	6 V	GND	"	"									"	"	7A		"		"			"
		91	"	"	"	"	"	"	"	6 V	GND	"									"	"	8A		"		"			"
		92	"	"	"	"	"	"	"	6 V	6 V	"									GND	"	2G		"		"			"

See footnotes at end of table.

TABLE III. Group A inspection for device type 11 - Continued.

Symbol	MIL-STD-883 method	Cases 2 and R	Terminal conditions 1/																					Measured terminal	Test Limits						Unit
			1	2	3	4	5	6	7	8	9	10	11	12	13	14	15	16	17	18	19	20			Subgroup 1 T_C = +25°C		Subgroup 2 T_C = +125°C		Subgroup 3 T_C = -55°C		
		Test no.	$1\overline{G}$	1A	2A	3A	4A	5A	6A	7A	8A	GND	8Y	7Y	6Y	5Y	4Y	3Y	2Y	1Y	$2\overline{G}$	V_{CC}			Min	Max	Min	Max	Min	Max	
I_{OS4}	3011	93	GND	4 V								GND									GND	4 V	1Y	-10	-135	-10	-135	-10	-135	mA
		94	"		4 V							"							GND		"	"	2Y	"	"	"	"	"	"	"
		95	"			4 V						"						GND			"	"	3Y	"	"	"	"	"	"	"
		96	"				4 V					"					GND				"	"	4Y	"	"	"	"	"	"	"
		97	"					4 V				"				GND					"	"	5Y	"	"	"	"	"	"	"
		98	"						4 V			"			GND						"	"	6Y	"	"	"	"	"	"	"
		99	"							4 V		"		GND							"	"	7Y	"	"	"	"	"	"	"
		100	"								4 V	"	GND								"	"	8Y	"	"	"	"	"	"	"
																								Subgroup 4 T_C = +25°C						
																								Min	Max					
C_I	3012	101	2/									GND										GND	$1\overline{G}$		10					pF
		102		2/								"										"	1A		"					"
		103			2/							"										"	2A		"					"
		104				2/						"										"	3A		"					"
		105					2/					"										"	4A		"					"
		106						2/				"										"	5A		"					"
		107							2/			"										"	6A		"					"
		108								2/		"										"	7A		"					"
		109									2/	"										"	8A		"					"
		110										"									2/	"	$2\overline{G}$		"					"
C_O		111										"										o V	Y's		20					"
		112	6 V									"	2/	2/	2/	2/	2/	2/	2/	2/	6 V	6 V	Y's		20					"
																								Subgroup 7 T_C = +25°C		Subgroup 8 T_C = +125°C		Subgroup 8 T_C = -55°C		
																								Min	Max	Min	Max	Min	Max	
Truth table	6/	113	B	A	A	A	A	A	A	A	A	GND	H	H	H	H	H	H	H	H	B	4.5 V	7/							
	6/	114	B	B	B	B	B	B	B	B	B	"	L	L	L	L	L	L	L	L	B	4.5 V	7/							
																								Subgroup 9 T_C = +25°C		Subgroup 10 T_C = +125°C		Subgroup 11 T_C = -55°C		
																								Min	Max	Min	Max	Min	Max	
t_{PHL}	3003 (Fig. 4)	115	GND	IN								GND									GND	4.5 V	1A to 1Y	8	22	8	29	8	22	ns
		116	"		IN							"									"	"	2A to 2Y	"	"	"	"	"	"	"
		117	"			IN						"									"	"	3A to 3Y	"	"	"	"	"	"	"
		118	"				IN					"									"	"	4A to 4Y	"	"	"	"	"	"	"
		119	"					IN				"									"	"	5A to 5Y	"	"	"	"	"	"	"
		120	"						IN			"									"	"	6A to 6Y	"	"	"	"	"	"	"
		121	"							IN		"									"	"	7A to 7Y	"	"	"	"	"	"	"
		122	"								IN	"	OUT	OUT	OUT	OUT	OUT	OUT	OUT	OUT	"	"	8A to 8Y	"	"	"	"	"	"	"
t_{PLH}	3003 (Fig. 4)	123	"	IN								"									"	"	1A to 1Y	"	"	"	"	"	"	"
		124	"		IN							"									"	"	2A to 2Y	"	"	"	"	"	"	"
		125	"			IN						"									"	"	3A to 3Y	"	"	"	"	"	"	"
		126	"				IN					"									"	"	4A to 4Y	"	"	"	"	"	"	"
		127	"					IN				"									"	"	5A to 5Y	"	"	"	"	"	"	"
		128	"						IN			"									"	"	6A to 6Y	"	"	"	"	"	"	"
		129	"							IN		"									"	"	7A to 7Y	"	"	"	"	"	"	"
		130	"								IN	"	OUT	OUT	OUT	OUT	OUT	OUT	OUT	OUT	"	"	8A to 8Y	"	"	"	"	"	"	"

See footnotes at end of table.

TABLE III. Group A inspection for device type 11 - Continued.

Symbol	MIL-STD-883 method	Cases 2 and R	Terminal conditions 1/																				Measured terminal	Test Limits						Unit
			1	2	3	4	5	6	7	8	9	10	11	12	13	14	15	16	17	18	19	20		Subgroup 1 T_C = +25°C		Subgroup 2 T_C = +125°C		Subgroup 3 T_C = -55°C		
		Test no.	1G	1A	2A	3A	4A	5A	6A	7A	8A	GND	8Y	7Y	6Y	5Y	4Y	3Y	2Y	1Y	2G	V_{CC}		Min	Max	Min	Max	Min	Max	
t_{PZH}	3003 (Fig. 4)	131	IN	GND	GND							GND									GND	4.5 V	1G to 1Y	8	31	8	41	8	31	ns
		132	"			GND						"						OUT	OUT	OUT	"	"	1G to 2Y	"	"	"	"	"	"	"
		133	"				GND					"					OUT				"	"	1G to 3Y	"	"	"	"	"	"	"
		134	"					GND				"				OUT					"	"	1G to 4Y	"	"	"	"	"	"	"
		135	"						GND			"			OUT						"	"	1G to 5Y	"	"	"	"	"	"	"
		136	"							GND		"		OUT							"	"	1G to 6Y	"	"	"	"	"	"	"
		137	"								GND	"	OUT								"	"	1G to 7Y	"	"	"	"	"	"	"
		138	"									"									"	"	1G to 8Y	"	"	"	"	"	"	"
		139	GND	GND	GND							"								OUT	IN	"	2G to 1Y	"	"	"	"	"	"	"
		140	"			GND						"						OUT	OUT		"	"	2G to 2Y	"	"	"	"	"	"	"
		141	"				GND					"					OUT				"	"	2G to 3Y	"	"	"	"	"	"	"
		142	"					GND				"				OUT					"	"	2G to 4Y	"	"	"	"	"	"	"
		143	"						GND			"			OUT						"	"	2G to 5Y	"	"	"	"	"	"	"
		144	"							GND		"		OUT							"	"	2G to 6Y	"	"	"	"	"	"	"
		145	"								GND	"	OUT								"	"	2G to 7Y	"	"	"	"	"	"	"
		146	"									"									"	"	2G to 8Y	"	"	"	"	"	"	"
t_{PZL}	3003 (Fig. 4)	147	IN	4.5 V	4.5 V							"								OUT	GND	"	1G to 1Y	"	"	"	"	"	"	"
		148	"			4.5 V						"						OUT	OUT		"	"	1G to 2Y	"	"	"	"	"	"	"
		149	"				4.5 V					"					OUT				"	"	1G to 3Y	"	"	"	"	"	"	"
		150	"					4.5 V				"				OUT					"	"	1G to 4Y	"	"	"	"	"	"	"
		151	"						4.5 V			"			OUT						"	"	1G to 5Y	"	"	"	"	"	"	"
		152	"							4.5 V		"		OUT							"	"	1G to 6Y	"	"	"	"	"	"	"
		153	"								4.5 V	"	OUT								"	"	1G to 7Y	"	"	"	"	"	"	"
		154	"									"									"	"	1G to 8Y	"	"	"	"	"	"	"
		155	GND	4.5 V	4.5 V							"								OUT	IN	"	2G to 1Y	"	"	"	"	"	"	"
		156	"			4.5 V						"						OUT	OUT		"	"	2G to 2Y	"	"	"	"	"	"	"
		157	"				4.5 V					"					OUT				"	"	2G to 3Y	"	"	"	"	"	"	"
		158	"					4.5 V				"				OUT					"	"	2G to 4Y	"	"	"	"	"	"	"
		159	"						4.5 V			"			OUT						"	"	2G to 5Y	"	"	"	"	"	"	"
		160	"							4.5 V		"		OUT							"	"	2G to 6Y	"	"	"	"	"	"	"
		161	"								4.5 V	"	OUT								"	"	2G to 7Y	"	"	"	"	"	"	"
		162	"									"									"	"	2G to 8Y	"	"	"	"	"	"	"
t_{PLZ}	3003 (Fig. 4)	163	IN	4.5 V	4.5 V							"								OUT	GND	"	1G to 1Y	"	"	"	"	"	"	"
		164	"			4.5 V						"						OUT	OUT		"	"	1G to 2Y	"	"	"	"	"	"	"
		165	"				4.5 V					"					OUT				"	"	1G to 3Y	"	"	"	"	"	"	"
		166	"					4.5 V				"				OUT					"	"	1G to 4Y	"	"	"	"	"	"	"
		167	"						4.5 V			"			OUT						"	"	1G to 5Y	"	"	"	"	"	"	"
		168	"							4.5 V		"		OUT							"	"	1G to 6Y	"	"	"	"	"	"	"
		169	"								4.5 V	"	OUT								"	"	1G to 7Y	"	"	"	"	"	"	"
		170	"									"									"	"	1G to 8Y	"	"	"	"	"	"	"
		171	GND	4.5 V	4.5 V							"								OUT	IN	"	2G to 1Y	"	"	"	"	"	"	"
		172	"			4.5 V						"						OUT	OUT		"	"	2G to 2Y	"	"	"	"	"	"	"
		173	"				4.5 V					"					OUT				"	"	2G to 3Y	"	"	"	"	"	"	"
		174	"					4.5 V				"				OUT					"	"	2G to 4Y	"	"	"	"	"	"	"
		175	"						4.5 V			"			OUT						"	"	2G to 5Y	"	"	"	"	"	"	"
		176	"							4.5 V		"		OUT							"	"	2G to 6Y	"	"	"	"	"	"	"
		177	"								4.5 V	"	OUT								"	"	2G to 7Y	"	"	"	"	"	"	"
		178	"									"									"	"	2G to 8Y	"	"	"	"	"	"	"
t_{PHZ}	3003 (Fig. 4)	179	IN	GND	GND							"								OUT	GND	"	1G to 1Y	"	"	"	"	"	"	"
		180	"			GND						"						OUT	OUT		"	"	1G to 2Y	"	"	"	"	"	"	"
		181	"				GND					"					OUT				"	"	1G to 3Y	"	"	"	"	"	"	"
		182	"					GND				"				OUT					"	"	1G to 4Y	"	"	"	"	"	"	"
		183	"						GND			"			OUT						"	"	1G to 5Y	"	"	"	"	"	"	"
		184	"							GND		"		OUT							"	"	1G to 6Y	"	"	"	"	"	"	"
		185	"								GND	"	OUT								"	"	1G to 7Y	"	"	"	"	"	"	"
		186	"									"									"	"	1G to 8Y	"	"	"	"	"	"	"

See footnotes at end of table.

TABLE III. Group A inspection for device type 11 - Continued.

Symbol	MIL-STD-883 method	Cases 2 and R	Terminal conditions 1/																				Measured terminal	Test limits						Unit
			1	2	3	4	5	6	7	8	9	10	11	12	13	14	15	16	17	18	19	20		Subgroup 1 T_C = +25°C		Subgroup 2 T_C = +125°C		Subgroup 3 T_C = -55°C		
		Test no.	1G	1A	2A	3A	4A	5A	6A	7A	8A	GND	8Y	7Y	6Y	5Y	4Y	3Y	2Y	1Y	2G	V_{CC}		Min	Max	Min	Max	Min	Max	
t_{PHZ}	3003 (Fig. 4)	187	GND	GND								GND								OUT	IN	4.5 V	2G to 1Y	8	31	9	31	9	31	ns
		188	"		GND							"							OUT		"	"	2G to 2Y	"	"	"	"	"	"	"
		189	"			GND						"						OUT			"	"	2G to 3Y	"	"	"	"	"	"	"
		190	"				GND					"					OUT				"	"	2G to 4Y	"	"	"	"	"	"	"
		191	"					GND				"				OUT					"	"	2G to 5Y	"	"	"	"	"	"	"
		192	"						GND			"			OUT						"	"	2G to 6Y	"	"	"	"	"	"	"
		193	"							GND		"		OUT							"	"	2G to 7Y	"	"	"	"	"	"	"
		194	"								GND	"	OUT								"	"	2G to 8Y	"	"	"	"	"	"	"
t_{TLH}	3004 (Fig. 4)	195	"	IN								"								OUT	GND	"	1Y	2	12	2	16	2	12	"
		196	"		IN							"							OUT		"	"	2Y	"	"	"	"	"	"	"
		197	"			IN						"						OUT			"	"	3Y	"	"	"	"	"	"	"
		198	"				IN					"					OUT				"	"	4Y	"	"	"	"	"	"	"
		199	"					IN				"				OUT					"	"	5Y	"	"	"	"	"	"	"
		200	"						IN			"			OUT						"	"	6Y	"	"	"	"	"	"	"
		201	"							IN		"		OUT							"	"	7Y	"	"	"	"	"	"	"
		202	"								IN	"	OUT								"	"	8Y	"	"	"	"	"	"	"
t_{THL}	3004 (Fig. 4)	203	"	IN								"								OUT	"	"	1Y	"	"	"	"	"	"	"
		204	"		IN							"							OUT		"	"	2Y	"	"	"	"	"	"	"
		205	"			IN						"						OUT			"	"	3Y	"	"	"	"	"	"	"
		206	"				IN					"					OUT				"	"	4Y	"	"	"	"	"	"	"
		207	"					IN				"				OUT					"	"	5Y	"	"	"	"	"	"	"
		208	"						IN			"			OUT						"	"	6Y	"	"	"	"	"	"	"
		209	"							IN		"		OUT							"	"	7Y	"	"	"	"	"	"	"
		210	"								IN	"	OUT								"	"	8Y	"	"	"	"	"	"	"

See footnotes at end of table.

TABLE III. Group A inspection for device type 51.

Symbol	MIL-STD-883 method	Case	Terminal conditions 1/														Measured terminal	Test limits						Unit
		2	2	3	4	6	8	9	10	12	13	14	16	18	19	20		Subgroup 1		Subgroup 2		Subgroup 3		
		C	1	2	3	4	5	6	7	8	9	10	11	12	13	14		T_C = +25°C		T_C = +125°C		T_C = -55°C		
		Test no.	1A	1Y	2A	2Y	3A	3Y	GND	4Y	4A	5Y	5A	6Y	6A	V_{CC}		Min	Max	Min	Max	Min	Max	
$V_{IC(pos)}$		1	1 mA						OPEN							GND	1A	1/	1.5					V
		2			1 mA				"							"	2A	"	"					"
		3					1 mA		"							"	3A	"	"					"
		4							"		1 mA					"	4A	"	"					"
		5							"				1 mA			"	5A	"	"					"
		6							"						1 mA	"	6A	"	"					"
$V_{IC(neg)}$		7	-1 mA						GND							OPEN	1A		"					V
		8			-1 mA				"							"	2A		"					"
		9					-1 mA		"							"	3A		"					"
		10							"		-1 mA					"	4A		"					"
		11							"				-1 mA			"	5A		"					"
		12							"						-1 mA	"	6A		"					"
I_{CC}	3005	13	GND		GND		GND		"		GND		GND		GND	5.5 V	V_{CC}		0.1		10			µA
I_{CC}	3005	14	5.5 V		5.5 V		5.5 V		"		5.5 V		5.5 V		5.5 V	5.5 V	V_{CC}		0.1		10			µA
I_{CCA}	3005	15	2.4 V		0.8 V		0.8 V		"		0.8 V		0.8 V		0.8 V	5.5 V	V_{CC}		.590		1.50			mA
V_{OH6}	3006	16	0.8 V	-20 µA					"							4.5 V	1Y	4.4		4.4		4.4		V
		17			0.8 V	-20 µA			"							"	2Y	"		"		"		"
		18					0.8 V	-20 µA	"							"	3Y	"		"		"		"
		19							"	-20 µA	0.8 V					"	4Y	"		"		"		"
		20							"			-20 µA	0.8 V			"	5Y	"		"		"		"
		21							"					-20 µA	0.8 V	"	6Y	"		"		"		"
V_{OH7}	3006	22	0.8 V	-4 mA					"							5.5 V	1Y	3.98		3.7		3.98		"
		23			0.8 V	-4 mA			"							"	2Y	"		"		"		"
		24					0.8 V	-4 mA	"							"	3Y	"		"		"		"
		25							"	-4 mA	0.8 V					"	4Y	"		"		"		"
		26							"			-4.0 mA	0.8 V			"	5Y	"		"		"		"
		27							"					-4.0 mA	0.8 V	"	6Y	"		"		"		"
V_{OL6}	3007	28	2.0 V	20 µA					"							4.5 V	1Y		0.1		0.1		0.1	"
		29			2.0 V	20 µA			"							"	2Y		"		"		"	"
		30					2.0 V	20 µA	"							"	3Y		"		"		"	"
		31							"	20 µA	2.0 V					"	4Y		"		"		"	"
		32							"			20 µA	2.0 V			"	5Y		"		"		"	"
		33							"					20 µA	2.0 V	"	6Y		"		"		"	"
V_{OL7}	3007	34	2.0 V	4.0 mA					"							5.5 V	1Y		0.26		0.4		0.26	"
		35			2.0 V	4.0 mA			"							"	2Y		"		"		"	"
		36					2.0 V	4.0 mA	"							"	3Y		"		"		"	"
		37							"	4.0 mA	2.0 V					"	4Y		"		"		"	"
		38							"			4.0 mA	2.0 V			"	5Y		"		"		"	"
		39							"					4.0 mA	2.0 V	"	6Y		"		"		"	"
I_{OS4}	3011	40	GND	GND	GND		GND		"		GND		GND		GND	4 V	1Y	-10	-120	-10	-120	-10	-120	mA
		41	"		"	GND	"		"		"		"		"	"	2Y	"	"	"	"	"	"	"
		42	"		"		"	GND	"		"		"		"	"	3Y	"	"	"	"	"	"	"
		43	"		"		"		"	GND	"		"		"	"	4Y	"	"	"	"	"	"	"
		44	"		"		"		"		"	GND	"		"	"	5Y	"	"	"	"	"	"	"
		45	"		"		"		"		"		"	GND	"	"	6Y	"	"	"	"	"	"	"
I_{IH}	3010	46	5.5 V		GND		GND		"		"		"		"	5.5 V	1A		.05		0.1			µA
		47	GND		5.5 V		GND		"		"		"		"	"	2A		"		"			"
		48	"		GND		5.5 V		"		"		"		"	"	3A		"		"			"
		49	"		"		GND		"		5.5 V		"		"	"	4A		"		"			"
		50	"		"		"		"		GND		5.5 V		GND	"	5A		"		"			"
		51	"		"		"		"		GND		GND		5.5 V	"	6A		"		"			"

See footnotes at end of table.

TABLE III. Group A inspection for device type 51 - Continued.

Symbol	MIL-STD-883 method	Case	Terminal conditions 1/														Measured terminal	Test limits						Unit
		2	2	3	4	6	8	9	10	12	13	14	16	18	19	20		Subgroup 1 T_C = +25°C		Subgroup 2 T_C = +125°C		Subgroup 3 T_C = -55°C		
		C	1	2	3	4	5	6	7	8	9	10	11	12	13	14								
		Test no.	1A	1Y	2A	2Y	3A	3Y	GND	4Y	4A	5Y	5A	6Y	6A	V_{CC}		Min	Max	Min	Max	Min	Max	
I_{IL}	3009	52	GND		5.5 V		5.5 V		GND		5.5 V		5.5 V		5.5 V	5.5 V	1A		-.05		-0.1			μA
		53	5.5 V		GND		5.5 V		"		"		"		"	"	2A		"		"			"
		54	"		5.5 V		GND		"		"		"		"	"	3A		"		"			"
		55	"	"	"		5.5 V		"		GND		"		"	"	4A		"		"			"
		56	"		"		"		"		5.5 V		GND		"	"	5A		"		"			"
		57	"		"		"		"		5.5 V		5.5 V		GND	"	6A		"		"			"
																		Subgroup 4 T_C = +25°C						
																		Min	Max					
C_i	3012	58	2/						"							GND	1A		10					pF
		59			2/				"							"	2A		"					"
		60					2/		"							"	3A		"					"
		61							"		2/					"	4A		"					"
		62							"				2/			"	5A		"					"
		63							"						2/	"	6A		"					"
																		Subgroup 9 T_C = +25°C		Subgroup 10 T_C = +125°C		Subgroup 11 T_C = -55°C		
																		Min	Max	Min	Max	Min	Max	
t_{PHL}	3003 (Fig. 4)	64	IN	OUT					GND							4.5 V	1A to 1Y	4	18	4	23	4	18	ns
		65			IN	OUT			"							"	2A to 2Y	"	"	"	"	"	"	"
		66					IN	OUT	"							"	3A to 3Y	"	"	"	"	"	"	"
		67							"	OUT	IN					"	4A to 4Y	"	"	"	"	"	"	"
		68							"			OUT	IN			"	5A to 5Y	"	"	"	"	"	"	"
		69							"					OUT	IN	"	6A to 6Y	"	"	"	"	"	"	"
t_{PLH}	3004 (Fig. 4)	70	IN	OUT					"							"	1A to 1Y	"	"	"	"	"	"	"
		71			IN	OUT			"							"	2A to 2Y	"	"	"	"	"	"	"
		72					IN	OUT	"							"	3A to 3Y	"	"	"	"	"	"	"
		73							"	OUT	IN					"	4A to 4Y	"	"	"	"	"	"	"
		74							"			OUT	IN			"	5A to 5Y	"	"	"	"	"	"	"
		75							"					OUT	IN	"	6A to 6Y	"	"	"	"	"	"	"
t_{THL}	3004 (Fig. 4)	76	IN	OUT					"							"	1Y	3	15	3	20	3	15	"
		77			IN	OUT			"							"	2Y	"	"	"	"	"	"	"
		78					IN	OUT	"							"	3Y	"	"	"	"	"	"	"
		79							"	OUT	IN					"	4Y	"	"	"	"	"	"	"
		80							"			OUT	IN			"	5Y	"	"	"	"	"	"	"
		81							"					OUT	IN	"	6Y	"	"	"	"	"	"	"
t_{TLH}	3004 (Fig. 4)	82	IN	OUT					"							"	1Y	"	"	"	"	"	"	"
		83			IN	OUT			"							"	2Y	"	"	"	"	"	"	"
		84					IN	OUT	"							"	3Y	"	"	"	"	"	"	"
		85							"	OUT	IN					"	4Y	"	"	"	"	"	"	"
		86							"			OUT	IN			"	5Y	"	"	"	"	"	"	"
		87							"					OUT	IN	"	6Y	"	"	"	"	"	"	"

See footnotes at end of table.

TABLE III. Group A inspection for device type 52.

Symbol	MIL-STD-883 method	Case	Terminal conditions 1/														Measured terminal	Test limits						Unit
		Z	2	3	4	6	8	9	10	12	13	14	16	18	19	20		Subgroup 1		Subgroup 2		Subgroup 3		
		C	1	2	3	4	5	6	7	8	9	10	11	12	13	14		T_C = +25°C		T_C = +125°C		T_C = -55°C		
		Test no.	1A	1Y	2A	2Y	3A	3Y	GND	4Y	4A	5Y	5A	6Y	6A	V_{CC}		Min	Max	Min	Max	Min	Max	
$V_{IC(pos)}$		1	1 mA						OPEN							GND	1A	1/	1.5					V
		2			1 mA				"							"	2A	"	"					"
		3					1 mA		"							"	3A	"	"					"
		4							"		1 mA					"	4A	"	"					"
		5							"				1 mA			"	5A	"	"					"
		6							"						1 mA	"	6A	"	"					"
$V_{IC(neg)}$		7	-1 mA						GND							OPEN	1A		-1.5					"
		8			-1 mA				"							"	2A		"					"
		9					-1 mA		"							"	3A		"					"
		10							"		-1 mA					"	4A		"					"
		11							"				-1 mA			"	5A		"					"
		12							"						-1 mA	"	6A		"					"
I_{CC}	3005	13	GND		GND		GND		"		GND		GND		GND	5.5 V	V_{CC}		0.1		10			µA
I_{CC}	3005	14	5.5 V		5.5 V		5.5 V		"		5.5 V		5.5 V		5.5 V	5.5 V	V_{CC}		0.1		10			µA
I_{CCA}		15	2.4 V		0.8 V		0.8 V		"		0.8 V		0.8 V		0.8 V	5.5 V	V_{CC}		.490		1.50			mA
V_{OH8}	3006	16	0.5 V	-20 µA					"							4.5 V	1Y	4.4		4.4		4.4		V
		17			0.5 V	-20 µA			"							"	2Y	"		"		"		"
		18					0.5 V	-20 µA	"							"	3Y	"		"		"		"
		19							"	-20 µA	0.5 V					"	4Y	"		"		"		"
		20							"			-20 µA	0.5 V			"	5Y	"		"		"		"
		21							"					-20 µA	0.5 V	"	6Y	"		"		"		"
V_{OH9}	3006	22	0.6 V	-4.0 mA					"							5.5 V	1Y	3.98		3.7		3.98		"
		23			0.6 V	-4.0 mA			"							"	2Y	"		"		"		"
		24					0.6 V	-4.0 mA	"							"	3Y	"		"		"		"
		25							"	-4.0 mA	0.6 V					"	4Y	"		"		"		"
		26							"			-4.0 mA	0.6 V			"	5Y	"		"		"		"
		27							"					-4.0 mA	0.6 V	"	6Y	"		"		"		"
V_{I-1}	3006	28	3/	OUT					"							4.5 V	1Y	0.5	1.2	0.5	1.2	0.5	1.2	"
		29			3/	OUT			"							"	2Y	"	"	"	"	"	"	"
		30					3/	OUT	"							"	3Y	"	"	"	"	"	"	"
		31							"	OUT	3/					"	4Y	"	"	"	"	"	"	"
		32							"			OUT	3/			"	5Y	"	"	"	"	"	"	"
		33							"					OUT	3/	"	6Y	"	"	"	"	"	"	"
V_{I-2}	3006	34	3/	OUT					"							5.5 V	1Y	0.6	1.4	0.6	1.4	0.6	1.4	"
		35			3/	OUT			"							"	2Y	"	"	"	"	"	"	"
		36					3/	OUT	"							"	3Y	"	"	"	"	"	"	"
		37							"	OUT	3/					"	4Y	"	"	"	"	"	"	"
		38							"			OUT	3/			"	5Y	"	"	"	"	"	"	"
		39							"					OUT	3/	"	6Y	"	"	"	"	"	"	"
V_{I+1}	3006	40	4/	OUT					"							4.5 V	1Y	1.2	1.9	1.2	1.9	1.2	1.9	"
		41			4/	OUT			"							"	2Y	"	"	"	"	"	"	"
		42					4/	OUT	"							"	3Y	"	"	"	"	"	"	"
		43							"	OUT	4/					"	4Y	"	"	"	"	"	"	"
		44							"			OUT	4/			"	5Y	"	"	"	"	"	"	"
		45							"					OUT	4/	"	6Y	"	"	"	"	"	"	"
V_{I+2}	3006	46	4/	OUT					"							5.5 V	1Y	1.4	2.1	1.4	2.1	1.4	2.1	"
		47			4/	OUT			"							"	2Y	"	"	"	"	"	"	"
		48					4/	OUT	"							"	3Y	"	"	"	"	"	"	"
		49							"	OUT	4/					"	4Y	"	"	"	"	"	"	"
		50							"			OUT	4/			"	5Y	"	"	"	"	"	"	"
		51							"					OUT	4/	"	6Y	"	"	"	"	"	"	"

See footnotes at end of table.

TABLE III. Group A inspection for device type 52 - Continued.

Symbol	MIL-STD-883 method	Case	Terminal conditions 1/														Measured terminal	Test limits						Unit
		2	2	3	4	6	8	9	10	12	13	14	16	18	19	20		Subgroup 1		Subgroup 2		Subgroup 3		
		C	1	2	3	4	5	6	7	8	9	10	11	12	13	14		T_C = +25°C		T_C = +125°C		T_C = -55°C		
		Test no.	1A	1Y	2A	2Y	3A	3Y	GND	4Y	4A	5Y	5A	6Y	6A	V_{CC}		Min	Max	Min	Max	Min	Max	
V_{H1}		52	5/						GND							4.5 V	1Y	0.4	1.4	0.4	1.4	0.4	1.4	V
		53			5/				"							"	2Y	"	"	"	"	"	"	"
		54					5/		"							"	3Y	"	"	"	"	"	"	"
		55							"		5/					"	4Y	"	"	"	"	"	"	"
		56							"				5/			"	5Y	"	"	"	"	"	"	"
		57							"						5/	"	6Y	"	"	"	"	"	"	"
V_{H2}		58	5/						"							5.5 V	1Y	"	1.5	"	1.5	"	1.5	"
		59			5/				"							"	2Y	"	"	"	"	"	"	"
		60					5/		"							"	3Y	"	"	"	"	"	"	"
		61							"		5/					"	4Y	"	"	"	"	"	"	"
		62							"				5/			"	5Y	"	"	"	"	"	"	"
		63							"						5/	"	6Y	"	"	"	"	"	"	"
V_{OL8}	3007	64	1.9 V	20 μA					"							4.5 V	1Y		0.1		0.1		0.1	"
		65			1.9 V	20 μA			"							"	2Y		"		"		"	"
		66					1.9 V	20 μA	"							"	3Y		"		"		"	"
		67							"	20 μA	1.9 V					"	4Y		"		"		"	"
		68							"			20 μA	1.9 V			"	5Y		"		"		"	"
		69							"					20 μA	1.9 V	"	6Y		"		"		"	"
V_{OL9}	3007	70	2.1 V	4.0 mA					"							5.5 V	1Y		0.26		0.4		0.26	"
		71			2.1 V	4.0 mA			"							"	2Y		"		"		"	"
		72					2.1 V	4.0 mA	"							"	3Y		"		"		"	"
		73							"	4.0 mA	2.1 V					"	4Y		"		"		"	"
		74							"			4.0 mA	2.1 V			"	5Y		"		"		"	"
		75							"					4.0 mA	2.1 V	"	6Y		"		"		"	"
I_{OS4}	3011	76	GND	GND	GND		GND		"		GND		GND		GND	4 V	1Y	-10	-120	-10	-120	-10	-120	mA
		77	"		"	GND	"		"		"		"		"	"	2Y	"	"	"	"	"	"	"
		78	"		"		"	GND	"		"		"		"	"	3Y	"	"	"	"	"	"	"
		79	"		"		"		"	GND	"		"		"	"	4Y	"	"	"	"	"	"	"
		80	"		"		"		"		"	GND	"		"	"	5Y	"	"	"	"	"	"	"
		81	"		"		"		"		"		"	GND	"	"	6Y	"	"	"	"	"	"	"
I_{IH}	3010	82	5.5 V		"		"		"		"		"		"	5.5 V	1A		.05		0.1			μA
		83	GND		5.5 V		"		"		"		"		"	"	2A		"		"			"
		84	"		GND		5.5 V		"		"		"		"	"	3A		"		"			"
		85	"		"		GND		"		5.5 V		"		"	"	4A		"		"			"
		86	"		"		"		"		GND		5.5 V		"	"	5A		"		"			"
		87	"		"		"		"		GND		GND		5.5 V	"	6A		"		"			"
I_{IL}	3009	88	"		5.5 V		5.5 V		"		5.5 V		5.5 V		"	"	1A		-.05		-0.1			"
		89	5.5 V		GND		5.5 V		"		"		"		"	"	2A		"		"			"
		90	"		5.5 V		GND		"		"		"		"	"	3A		"		"			"
		91	"		"		5.5 V		"		GND		"		"	"	4A		"		"			"
		92	"		"		"		"		5.5 V		GND		"	"	5A		"		"			"
		93	"		"		"		"		5.5 V		5.5 V		GND	"	6A		"		"			"

See footnotes at end of table.

TABLE III. Group A inspection for device type 52 - Continued.

Symbol	MIL-STD-883 method	Case	Terminal conditions 1/														Measured terminal	Test limits						Unit
		2	2	3	4	6	8	9	10	12	13	14	16	19	19	20		Subgroup 4 T_C = +25°C						
		C	1	2	3	4	5	6	7	8	9	10	11	12	13	14								
		Test no.	1A	1Y	2A	2Y	3A	3Y	GND	4Y	4A	5Y	5A	6Y	6A	V_{CC}		Min	Max					
C_1		94	2/						GND							GND	1A		10					pF
		95			2/				"							"	2A		"					"
		96					2/		"							"	3A		"					"
		97							"		2/					"	4A		"					"
		98							"				2/			"	5A		"					"
		99							"						2/	"	6A		"					"
																		Subgroup 9 T_C = +25°C		Subgroup 10 T_C = +125°C		Subgroup 11 T_C = -55°C		
																		Min	Max	Min	Max	Min	Max	
t_{PHL}	3003 (Fig. 4)	100	IN	OUT	IN	OUT	IN	OUT	GND	OUT	IN	OUT	IN	OUT	IN	4.5 V	1A to 1Y	10	33	10	44	10	33	ns
		101							"							"	2A to 2Y	"	"	"	"	"	"	"
		102							"							"	3A to 3Y	"	"	"	"	"	"	"
		103							"							"	4A to 4Y	"	"	"	"	"	"	"
		104							"							"	5A to 5Y	"	"	"	"	"	"	"
		105							"							"	6A to 6Y	"	"	"	"	"	"	"
t_{PLH}	3003 (Fig. 4)	106	IN	OUT	IN	OUT	IN	OUT	"	OUT	IN	OUT	IN	OUT	IN	"	1A to 1Y	"	"	"	"	"	"	"
		107							"							"	2A to 2Y	"	"	"	"	"	"	"
		108							"							"	3A to 3Y	"	"	"	"	"	"	"
		109							"							"	4A to 4Y	"	"	"	"	"	"	"
		110							"							"	5A to 5Y	"	"	"	"	"	"	"
		111							"							"	6A to 6Y	"	"	"	"	"	"	"
t_{THL}	3004 (Fig. 4)	112	IN	OUT	IN	OUT	IN	OUT	"	OUT	IN	OUT	IN	OUT	IN	"	1Y	3	15	3	20	3	15	"
		113							"							"	2Y	"	"	"	"	"	"	"
		114							"							"	3Y	"	"	"	"	"	"	"
		115							"							"	4Y	"	"	"	"	"	"	"
		116							"							"	5Y	"	"	"	"	"	"	"
		117							"							"	6Y	"	"	"	"	"	"	"
t_{TLH}	3004 (Fig. 4)	118	IN	OUT	IN	OUT	IN	OUT	"	OUT	IN	OUT	IN	OUT	IN	"	1Y	"	"	"	"	"	"	"
		119							"							"	2Y	"	"	"	"	"	"	"
		120							"							"	3Y	"	"	"	"	"	"	"
		121							"							"	4Y	"	"	"	"	"	"	"
		122							"							"	5Y	"	"	"	"	"	"	"
		123							"							"	6Y	"	"	"	"	"	"	"

See footnotes at end of table.

TABLE III. Group A inspection for device type 53.

Symbol	MIL-STD-883 method	Cases 2 and R	Terminal conditions 1/																				Measured terminal	Test Limits						Unit
			1	2	3	4	5	6	7	8	9	10	11	12	13	14	15	16	17	18	19	20		Subgroup 1 T_C = +25°C		Subgroup 2 T_C = +125°C		Subgroup 3 T_C = -55°C		
		Test no.	$1\overline{G}$	1A1	2Y4	1A2	2Y3	1A3	2Y2	1A4	2Y1	GND	2A1	1Y4	2A2	1Y3	2A3	1Y2	2A4	1Y1	$2\overline{G}$	V_{CC}		Min	Max	Min	Max	Min	Max	
V_{IC} (pos)		1	1 mA									OPEN										GND	$1\overline{G}$	1/	1.5					V
		2		1 mA								"										"	1A1	"	"					"
		3				1 mA						"										"	1A2	"	"					"
		4						1 mA				"										"	1A3	"	"					"
		5								1 mA		"										"	1A4	"	"					"
		6										"	1 mA									"	2A1	"	"					"
		7										"			1 mA							"	2A2	"	"					"
		8										"					1 mA					"	2A3	"	"					"
		9										"							1 mA			"	2A4	"	"					"
		10										"									1 mA	"	$2\overline{G}$	"	"					"
V_{IC} (neg)		11	-1 mA									GND										OPEN	$1\overline{G}$		-1.5					"
		12		-1 mA								"										"	1A1		"					"
		13				-1 mA						"										"	1A2		"					"
		14						-1 mA				"										"	1A3		"					"
		15								-1 mA		"										"	1A4		"					"
		16										"	-1 mA									"	2A1		"					"
		17										"			-1 mA							"	2A2		"					"
		18										"					-1 mA					"	2A3		"					"
		19										"							-1 mA			"	2A4		"					"
		20										"									-1 mA	"	$2\overline{G}$		"					"
I_{CCH}	3005	21	GND	GND		GND		GND		GND		"	GND		GND		GND		GND		GND	5.5 V	V_{CC}		10.2		20			μA
I_{CCL}	3005	22	GND	5.5 V		5.5 V		5.5 V		5.5 V		"	5.5 V		5.5 V		5.5 V		5.5 V		GND	"	"		10.2		20			μA
I_{CCA}		23	0.4 V	0.8 V		0.8 V		0.8 V		0.8 V		"	2.4 V		0.8 V		0.8 V		0.8 V		0.8 V	"	"		.49		1.5			mA
		24	0.8 V	0.8 V		0.8 V		0.8 V		0.8 V		"	0.8 V		0.8 V		0.8 V		0.8 V		2.4 V	"	"		.49		1.5			mA
I_{CCZ}	3005	25	5.5 V	5.5 V		5.5 V		5.5 V		5.5 V		"	GND		GND		GND		GND		GND	"	"		10.1		10			μA
		26	GND	GND		GND		GND		GND		"	5.5 V		5.5 V		5.5 V		5.5 V		5.5 V	"	"		10.1		10			μA
V_{OH6}	3006	27	0.8 V	0.8 V		0.8 V		0.8 V		0.8 V		"						-20 μA		-20 μA		4.5 V	1Y1	4.4		4.4		4.4		V
		28	"									"										"	1Y2	"		"		"		"
		29	"									"				-20 μA						"	1Y3	"		"		"		"
		30	"								-20 μA	"		-20 μA								"	1Y4	"		"		"		"
		31										"	0.8 V								0.8 V	"	2Y1	"		"		"		"
		32							-20 μA			"			0.8 V						"	"	2Y2	"		"		"		"
		33					-20 μA					"					0.8 V				"	"	2Y3	"		"		"		"
		34			-20 μA							"							0.8 V			"	2Y4	"		"		"		"
V_{OH7}	3006	35	0.8 V	0.8 V		0.8 V		0.8 V		0.8 V		"						-6.0 mA		-6.0 mA		5.5 V	1Y1	3.98		3.7		3.98		"
		36	"									"										"	1Y2	"		"		"		"
		37	"									"				-6.0 mA						"	1Y3	"		"		"		"
		38	"								-6.0 mA	"		-6.0 mA								"	1Y4	"		"		"		"
		39										"	0.8 V								0.8 V	"	2Y1	"		"		"		"
		40							-6.0 mA			"			0.8 V						"	"	2Y2	"		"		"		"
		41					-6.0 mA					"					0.8 V				"	"	2Y3	"		"		"		"
		42			-6.0 mA							"							0.8 V			"	2Y4	"		"		"		"
V_{OL6}	3007	43	0.8 V	2.0 V		2.0 V		2.0 V		2.0 V		"						20 μA		20 μA		4.5 V	1Y1		0.1		0.1		0.1	"
		44	"									"										"	1Y2		"		"		"	"
		45	"									"				20 μA						"	1Y3		"		"		"	"
		46	"								20 μA	"		20 μA								"	1Y4		"		"		"	"
		47										"	2.0 V								2.0 V	"	2Y1		"		"		"	"
		48							20 μA			"			2.0 V						"	"	2Y2		"		"		"	"
		49					20 μA					"					2.0 V				"	"	2Y3		"		"		"	"
		50			20 μA							"							2.0 V			"	2Y4		"		"		"	"

See footnotes at end of table.

TABLE III. Group A inspection for device type 53 - Continued.

Symbol	MIL-STD-883 method	Cases 2 and R	Terminal conditions 1/																				Measured terminal	Test limits						Unit
			1	2	3	4	5	6	7	8	9	10	11	12	13	14	15	16	17	18	19	20		Subgroup 1 T_C = +25°C		Subgroup 2 T_C = +125°C		Subgroup 3 T_C = -55°C		
		Test no.	1$\overline{G}$	1A1	2Y4	1A2	2Y3	1A3	2Y2	1A4	2Y1	GND	2A1	1Y4	2A2	1Y3	2A3	1Y2	2A4	1Y1	2$\overline{G}$	V_{CC}		Min	Max	Min	Max	Min	Max	
V_{OL7}	3007	51	0.8 V	2.0 V								GND								6.0 mA		5.5V	1Y1		0.26		0.4		0.26	V
		52	"			2.0 V						"						6.0 mA				"	1Y2		"		"		"	"
		53	"					2.0 V				"				6.0 mA						"	1Y3		"		"		"	"
		54	"							2.0 V		"		6.0 mA								"	1Y4		"		"		"	"
		55									6.0 mA	"	2.0 V								0.8 V	"	2Y1		"		"		"	"
		56							6.0 mA			"			2.0 V						"	"	2Y2		"		"		"	"
		57					6.0 mA					"					2.0 V				"	"	2Y3		"		"		"	"
		58			6.0 mA							"							2.0 V			"	2Y4		"		"		"	"
I_{OZH}		59	9/	9/								"								5.5 V		"	1Y1		0.2		2.0			μA
		60	"			9/						"						5.5 V				"	1Y2		"		"			"
		61	"					9/				"				5.5 V						"	1Y3		"		"			"
		62	"							9/		"		5.5 V								"	1Y4		"		"			"
		63									5.5 V	"	9/								9/	"	2Y1		"		"			"
		64							5.5 V			"			9/						"	"	2Y2		"		"			"
		65					5.5 V					"					9/				"	"	2Y3		"		"			"
		66			5.5 V							"							9/			"	2Y4		"		"			"
I_{OZL}		67	9/	9/								"								GND		"	1Y1		-0.2		-2.0			"
		68	"			9/						"						GND				"	1Y2		"		"			"
		69	"					9/				"				GND						"	1Y3		"		"			"
		70	"							9/		"		GND								"	1Y4		"		"			"
		71									GND	"	9/								9/	"	2Y1		"		"			"
		72							GND			"			9/						"	"	2Y2		"		"			"
		73					GND					"					9/				"	"	2Y3		"		"			"
		74			GND							"							9/			"	2Y4		"		"			"
I_{IH}	3010	75	5.5 V	GND		GND		GND		GND		"	GND		GND		GND		GND		GND	"	1$\overline{G}$		.05		0.1			"
		76	GND	5.5 V		GND		"		"		"	"		"		"		"		"	"	1A1		"		"			"
		77	"	GND		5.5 V		"		"		"	"		"		"		"		"	"	1A2		"		"			"
		78	"	"		GND		5.5 V		"		"	"		"		"		"		"	"	1A3		"		"			"
		79	"	"		"		GND		5.5 V		"	"		"		"		"		"	"	1A4		"		"			"
		80	"	"		"		"		GND		"	5.5 V		"		"		"		"	"	2A1		"		"			"
		81	"	"		"		"		"		"	GND		5.5 V		"		"		"	"	2A2		"		"			"
		82	"	"		"		"		"		"	"		GND		5.5 V		"		"	"	2A3		"		"			"
		83	"	"		"		"		"		"	"		"		GND		5.5 V		"	"	2A4		"		"			"
		84	"	"		"		"		"		"	"		"		GND		GND		5.5 V	"	2$\overline{G}$		"		"			"
I_{IL}	3009	85	"	5.5 V		5.5 V		5.5 V		5.5 V		"	5.5 V		5.5 V		5.5 V		5.5 V		"	"	1$\overline{G}$		-.05		-0.1			"
		86	5.5 V	GND		5.5 V		"		"		"	"		"		"		"		"	"	1A1		"		"			"
		87	"	5.5 V		GND		"		"		"	"		"		"		"		"	"	1A2		"		"			"
		88	"	"		5.5 V		GND		"		"	"		"		"		"		"	"	1A3		"		"			"
		89	"	"		"		5.5 V		GND		"	"		"		"		"		"	"	1A4		"		"			"
		90	"	"		"		"		5.5 V		"	GND		"		"		"		"	"	2A1		"		"			"
		91	"	"		"		"		"		"	5.5 V		GND		"		"		"	"	2A2		"		"			"
		92	"	"		"		"		"		"	"		5.5 V		GND		"		"	"	2A3		"		"			"
		93	"	"		"		"		"		"	"		"		5.5 V		GND		"	"	2A4		"		"			"
		94	"	"		"		"		"		"	"		"		5.5 V		5.5 V		GND	"	2$\overline{G}$		"		"			"
I_{OS4}	3009	95	GND	GND		GND		GND		GND		"	GND		GND		GND		GND	GND		4 V	1Y1	-10	135	10	135	10	-135	mA
		96	"	"		"		"		"		"	"		"		"		"			"	1Y2	"	"	"	"	"	"	"
		97	"	"		"		"		"		"	"	GND	"	GND	"		"			"	1Y3	"	"	"	"	"	"	"
		98		"		"		"		"	GND	"	"		"		"		"		GND	"	1Y4	"	"	"	"	"	"	"
		99		"		"		"	GND	"		"	"		"		"		"		"	"	2Y1	"	"	"	"	"	"	"
		100		"		"		"		"		"	"		"		"		"		"	"	2Y2	"	"	"	"	"	"	"
		101		"		"	GND	"		"		"	"		"		"		"		"	"	2Y3	"	"	"	"	"	"	"
		102		"	GND	"		"		"		"	"		"		"		"		"	"	2Y4	"	"	"	"	"	"	"

See footnotes at end of table.

TABLE III. Group A inspection for device type 53 - Continued.

Symbol	MIL-STD-883 method	Cases 2 and R	Terminal conditions 1/																				Measured terminal	Test limits						Unit
			1	2	3	4	5	6	7	8	9	10	11	12	13	14	15	16	17	18	19	20		Subgroup 4 T_C = +25°C						
		Test no.	1$\overline{G}$	1A1	2Y4	1A2	2Y3	1A3	2Y2	1A4	2Y1	GND	2A1	1Y4	2A2	1Y3	2A3	1Y2	2A4	1Y1	2$\overline{G}$	V_{CC}		Min	Max					
C_I	3012	103	2/									GND										GND	1$\overline{G}$		10					pF
		104		2/								"										"	1A1		"					"
		105				2/						"										"	1A2		"					"
		106						2/				"										"	1A3		"					"
		107								2/		"										"	1A4		"					"
		108										"	2/									"	2A1		"					"
		109										"			2/							"	2A2		"					"
		110										"					2/					"	2A3		"					"
		111										"							2/			"	2A4		"					"
		112										"									2/	"	2$\overline{G}$		"					"
C_O		113	GND		2/		2/		2/		2/	"									5.5 V	5.5 V	2Y's		20					"
		114	5.5 V									"		2/		2/		2/		2/	GND	5.5 V	1Y's		20					"
																								Subgroup 7 T_C = +25°C		Subgroup 8 T_C = +125°C		Subgroup 8 T_C = -55°C		
																								Min	Max	Min	Max	Min	Max	
Truth table	3014 8/	115	B	B	H	B	H	B	H	B	H	GND	B	H	B	H	B	H	B	H	B	4.5 V	7/							
		116	B	A	L	A	L	A	L	A	L	GND	A	L	A	L	A	L	A	L	B	4.5 V	7/							
																								Subgroup 9 T_C = +25°C		Subgroup 10 T_C = +125°C		Subgroup 11 T_C = -55°C		
																								Min	Max	Min	Max	Min	Max	
t_{PHL}	3003 (Fig. 4)	117	GND	IN		IN		IN		IN		GND										4.5 V	1A1 to 1Y1	8	22	8	29	8	22	ns
		118	"									"										"	1A2 to 1Y2	"	"	"	"	"	"	"
		119	"									"										"	1A3 to 1Y3	"	"	"	"	"	"	"
		120	"									"										"	1A4 to 1Y4	"	"	"	"	"	"	"
		121										"									GND	"	2A1 to 2Y1	"	"	"	"	"	"	"
		122										"									"	"	2A2 to 2Y2	"	"	"	"	"	"	"
		123										"									"	"	2A3 to 2Y3	"	"	"	"	"	"	"
		124			OUT		OUT		OUT		OUT	"	IN	OUT	IN	OUT	IN	OUT	IN	OUT	"	"	2A4 to 2Y4	"	"	"	"	"	"	"
t_{PLH}	3003 (Fig. 4)	125	GND	IN		IN		IN		IN		"										"	1A1 to 1Y1	"	"	"	"	"	"	"
		126	"									"										"	1A2 to 1Y2	"	"	"	"	"	"	"
		127	"									"										"	1A3 to 1Y3	"	"	"	"	"	"	"
		128	"									"										"	1A4 to 1Y4	"	"	"	"	"	"	"
		129										"									GND	"	2A1 to 2Y1	"	"	"	"	"	"	"
		130										"									"	"	2A2 to 2Y2	"	"	"	"	"	"	"
		131										"									"	"	2A3 to 2Y3	"	"	"	"	"	"	"
		132			OUT		OUT		OUT		OUT	"	IN	OUT	IN	OUT	IN	OUT	IN	OUT	"	"	2A4 to 2Y4	"	"	"	"	"	"	"
t_{PZL}	3003 (Fig. 4)	133	IN	4.5 V		4.5 V		4.5 V		4.5 V		"										"	1$\overline{G}$ to 1Y1	"	31	"	31	"	31	"
		134	"									"										"	1$\overline{G}$ to 1Y2	"	"	"	"	"	"	"
		135	"									"										"	1$\overline{G}$ to 1Y3	"	"	"	"	"	"	"
		136	"									"										"	1$\overline{G}$ to 1Y4	"	"	"	"	"	"	"
		137										"									IN	"	2$\overline{G}$ to 2Y1	"	"	"	"	"	"	"
		138										"									"	"	2$\overline{G}$ to 2Y2	"	"	"	"	"	"	"
		139										"									"	"	2$\overline{G}$ to 2Y3	"	"	"	"	"	"	"
		140			OUT		OUT		OUT		OUT	"	4.5 V	OUT	4.5 V	OUT	4.5 V	OUT	4.5 V	OUT	"	"	2$\overline{G}$ to 2Y4	"	"	"	"	"	"	"

See footnotes at end of table.

TABLE III. Group A inspection for device type 53 - Continued.

Symbol	MIL-STD-883 method	Cases 2 and R	Terminal conditions 1/																					Measured terminal	Test limits						Unit
			1	2	3	4	5	6	7	8	9	10	11	12	13	14	15	16	17	18	19	20		Subgroup 1 T_C = +25°C		Subgroup 2 T_C = +125°C		Subgroup 3 T_C = -55°C		
		Test no.	1$\overline{G}$	1A1	2Y4	1A2	2Y3	1A3	2Y2	1A4	2Y1	GND	2A1	1Y4	2A2	1Y3	2A3	1Y2	2A4	1Y1	2$\overline{G}$	V_{CC}		Min	Max	Min	Max	Min	Max	
t_{PZH}	3003 (Fig. 4)	141	IN	GND		GND		GND		GND		GND	GND	OUT		OUT		OUT		OUT		4.5 V	1$\overline{G}$ to 1Y1	8	31	8	41	8	31	ns
		142	"									"										"	1$\overline{G}$ to 1Y2	"	"	"	"	"	"	"
		143	"									"										"	1$\overline{G}$ to 1Y3	"	"	"	"	"	"	"
		144	"									"										"	1$\overline{G}$ to 1Y4	"	"	"	"	"	"	"
		145										"									IN	"	2$\overline{G}$ to 2Y1	"	"	"	"	"	"	"
		146										"									"	"	2$\overline{G}$ to 2Y2	"	"	"	"	"	"	"
		147										"									"	"	2$\overline{G}$ to 2Y3	"	"	"	"	"	"	"
		148			OUT		OUT		OUT		OUT	"									"	"	2$\overline{G}$ to 2Y4	"	"	"	"	"	"	"
t_{PLZ}	3003 (Fig. 4)	149	IN	4.5 V		4.5 V		4.5 V		4.5 V		"	4.5 V	OUT		OUT		OUT		OUT		"	1$\overline{G}$ to 1Y1	"	"	"	"	"	"	"
		150	"									"										"	1$\overline{G}$ to 1Y2	"	"	"	"	"	"	"
		151	"									"										"	1$\overline{G}$ to 1Y3	"	"	"	"	"	"	"
		152	"									"										"	1$\overline{G}$ to 1Y4	"	"	"	"	"	"	"
		153										"									IN	"	2$\overline{G}$ to 2Y1	"	"	"	"	"	"	"
		154										"									"	"	2$\overline{G}$ to 2Y2	"	"	"	"	"	"	"
		155										"									"	"	2$\overline{G}$ to 2Y3	"	"	"	"	"	"	"
		156			OUT		OUT		OUT		OUT	"									"	"	2$\overline{G}$ to 2Y4	"	"	"	"	"	"	"
t_{PHZ}	3003 (Fig. 4)	157	IN	GND		GND		GND		GND		"	GND	OUT		OUT		OUT		OUT		"	1$\overline{G}$ to 1Y1	"	"	"	"	"	"	"
		158	"									"										"	1$\overline{G}$ to 1Y2	"	"	"	"	"	"	"
		159	"									"										"	1$\overline{G}$ to 1Y3	"	"	"	"	"	"	"
		160	"									"										"	1$\overline{G}$ to 1Y4	"	"	"	"	"	"	"
		161										"									IN	"	2$\overline{G}$ to 2Y1	"	"	"	"	"	"	"
		162										"									"	"	2$\overline{G}$ to 2Y2	"	"	"	"	"	"	"
		163										"									"	"	2$\overline{G}$ to 2Y3	"	"	"	"	"	"	"
		164			OUT		OUT		OUT		OUT	"									"	"	2$\overline{G}$ to 2Y4	"	"	"	"	"	"	"
t_{THL}	3004 (Fig. 4)	165	GND	IN		IN		IN		IN		"	IN	OUT		OUT		OUT		OUT		"	1Y1	2	12	2	16	2	12	"
		166	"									"										"	1Y2	"	"	"	"	"	"	"
		167	"									"										"	1Y3	"	"	"	"	"	"	"
		168	"									"										"	1Y4	"	"	"	"	"	"	"
		169										"									GND	"	2Y1	"	"	"	"	"	"	"
		170										"									"	"	2Y2	"	"	"	"	"	"	"
		171										"									"	"	2Y3	"	"	"	"	"	"	"
		172			OUT		OUT		OUT		OUT	"									"	"	2Y4	"	"	"	"	"	"	"
t_{TLH}	3004 (Fig. 4)	173	GND	IN		IN		IN		IN		"	IN	OUT		OUT		OUT		OUT		"	1Y1	"	"	"	"	"	"	"
		174	"									"										"	1Y2	"	"	"	"	"	"	"
		175	"									"										"	1Y3	"	"	"	"	"	"	"
		176	"									"										"	1Y4	"	"	"	"	"	"	"
		177										"									GND	"	2Y1	"	"	"	"	"	"	"
		178										"									"	"	2Y2	"	"	"	"	"	"	"
		179										"									"	"	2Y3	"	"	"	"	"	"	"
		180			OUT		OUT		OUT		OUT	"									"	"	2Y4	"	"	"	"	"	"	"

See footnotes at end of table.

TABLE III. Group A inspection for device type 54.

Symbol	MIL-STD-883 method	Cases 2 and R	Terminal conditions 1/																				Measured terminal	Test limits						Unit
			1	2	3	4	5	6	7	8	9	10	11	12	13	14	15	16	17	18	19	20		Subgroup 1 T_C = +25°C		Subgroup 2 T_C = +125°C		Subgroup 3 T_C = -55°C		
		Test no.	$1\overline{G}$	1A1	2Y4	1A2	2Y3	1A3	2Y2	1A4	2Y1	GND	2A1	1Y4	2A2	1Y3	2A3	1Y2	2A4	1Y1	2G	V_{CC}		Min	Max	Min	Max	Min	Max	
V_{IC} (pos)		1	1 mA									OPEN										GND	$1\overline{G}$	1/	1.5					V
		2		1 mA								"										"	1A1	"	"					"
		3				1 mA						"										"	1A2	"	"					"
		4						1 mA				"										"	1A3	"	"					"
		5								1 mA		"										"	1A4	"	"					"
		6										"	1 mA									"	2A1	"	"					"
		7										"			1 mA							"	2A2	"	"					"
		8										"					1 mA					"	2A3	"	"					"
		9										"							1 mA			"	2A4	"	"					"
		10										"									1 mA	"	2G	"	"					"
V_{IC} (neg)		11	-1 mA									GND										OPEN	$1\overline{G}$		-1.5					"
		12		-1 mA								"										"	1A1		"					"
		13				-1 mA						"										"	1A2		"					"
		14						-1 mA				"										"	1A3		"					"
		15								-1 mA		"										"	1A4		"					"
		16										"	-1 mA									"	2A1		"					"
		17										"			-1 mA							"	2A2		"					"
		18										"					-1 mA					"	2A3		"					"
		19										"							-1 mA			"	2A4		"					"
		20										"									-1 mA	"	2G		"					"
I_{CCH}	3005	21	GND	5.5 V		5.5 V		5.5 V		5.5 V		"	5.5 V		5.5 V		5.5 V		5.5 V		5.5 V	5.5 V	V_{CC}		0.2		20			μA
I_{CCL}	3005	22	GND	GND		GND		GND		GND		"	GND		GND		GND		GND		"	"	"		0.2		20			"
I_{CCa}		23	0.8 V	0.8 V		0.8 V		0.8 V		0.8 V		"	2.4 V		0.8 V		0.8 V		0.8 V		"	"	"		.490		1.50			mA
		24	0.8 V	0.8 V		0.8 V		0.8 V		0.8 V		"	0.8 V		0.8 V		0.8 V		0.8 V		2.4 V	"	"		"		"			"
		25	2.4 V	0.8 V		0.8 V		0.8 V		0.8 V		"	0.8 V		0.8 V		0.8 V		0.8 V		0.8 V	"	"		"		"			"
I_{CCZ}		26	5.5 V	5.5 V		5.5 V		5.5 V		5.5 V		"	GND		GND		GND		GND		5.5 V	"	"		0.1		10			"
		27	GND	GND		GND		GND		GND		"	5.5 V		5.5 V		5.5 V		5.5 V		GND	"	"		0.1		10			"
V_{OH6}	3006	28	0.8 V	2.0 V								"								-20 μA		4.5 V	1Y1	4.4		4.4		4.4		V
		29	"									"						-20 μA				"	1Y2	"		"		"		"
		30	"					2.0 V				"				-20 μA						"	1Y3	"		"		"		"
		31	"							2.0 V		"										"	1Y4	"		"		"		"
		32									-20 μA	"	2.0 V								2.0 V	"	2Y1	"		"		"		"
		33							-20 μA			"			2.0 V						"	"	2Y2	"		"		"		"
		34					-20 μA					"					2.0 V				"	"	2Y3	"		"		"		"
		35			-20 μA							"							2.0 V		"	"	2Y4	"		"		"		"
V_{OH7}	3006	36	0.8 V	2.0 V								"								-6.0 mA		5.5 V	1Y1	3.98		3.7		3.98		"
		37	"			2.0 V						"						-6.0 mA				"	1Y2	"		"		"		"
		38	"					2.0 V				"				-6.0 mA						"	1Y3	"		"		"		"
		39	"							2.0 V		"		6.0 mA								"	1Y4	"		"		"		"
		40									-6.0 mA	"	2.0 V								2.0 V	"	2Y1	"		"		"		"
		41							-6.0 mA			"			2.0 V						"	"	2Y2	"		"		"		"
		42					-6.0 mA					"					2.0 V				"	"	2Y3	"		"		"		"
		43			6.0 mA							"							2.0 V		"	"	2Y4	"		"		"		"
V_{OL6}	3007	44	0.8 V	0.8 V								"								20 μA		4.5 V	1Y1		0.1		0.1		0.1	"
		45	"			0.8 V						"						20 μA				"	1Y2		"		"			"
		46	"					0.8 V				"				20 μA						"	1Y3		"		"			"
		47	"							0.8 V		"		20 μA								"	1Y4		"		"			"
		48									20 μA	"	0.8 V								0.8 V	"	2Y1		"		"			"
		49							20 μA			"			0.8 V						"	"	2Y2		"		"			"
		50					20 μA					"					0.8 V				"	"	2Y3		"		"			"
		51			20 μA							"							0.8 V		"	"	2Y4		"		"			"

See footnotes at end of table.

TABLE III. Group A inspection for device type 54 - Continued.

Symbol	MIL-STD-883 method	Cases 2 and R	Terminal conditions 1/																				Measured terminal	Test limits						Unit
			1	2	3	4	5	6	7	8	9	10	11	12	13	14	15	16	17	18	19	20		Subgroup 1 T_C = +25°C		Subgroup 2 T_C = +125°C		Subgroup 3 T_C = -55°C		
		Test no.	1G	1A1	2Y4	1A2	2Y3	1A3	2Y2	1A4	2Y1	GND	2A1	1Y4	2A2	1Y3	2A3	1Y2	2A4	1Y1	2G	V_{CC}		Min	Max	Min	Max	Min	Max	
V_{OL7}	3007	52	0.8 V	0.8 V								GND								6.0 mA		5.5V	1Y1		0.26		0.4		0.26	V
		53	"			0.8 V						"						6.0 mA				"	1Y2		"		"		"	"
		54	"					0.8 V				"				6.0 mA						"	1Y3		"		"		"	"
		55	"							0.8 V		"		6.0 mA								"	1Y4		"		"		"	"
		56									6.0 mA	"	0.8 V								2.0 V	"	2Y1		"		"		"	"
		57							6.0 mA			"			0.8 V						"	"	2Y2		"		"		"	"
		58					6.0 mA					"					0.8 V				"	"	2Y3		"		"		"	"
		59			6.0 mA							"							0.8 V		"	"	2Y4		"		"		"	"
I_{OZH}		60	9/	9/								"										"	1Y1		0.2		2.0			μA
		61	"			9/						"						5.5 V		5.5 V		"	1Y2		"		"			"
		62	"					9/				"				5.5 V						"	1Y3		"		"			"
		63	"							9/		"		5.5 V								"	1Y4		"		"			"
		64							5.5 V		5.5 V	"	9/								9/	"	2Y1		"		"			"
		65										"			9/						"	"	2Y2		"		"			"
		66					5.5 V					"					9/				"	"	2Y3		"		"			"
		67			5.5 V							"							9/		"	"	2Y4		"		"			"
I_{OZL}		68	9/	9/								"										"	1Y1		-0.2		-2.0			"
		69	"			9/						"						GND		GND		"	1Y2		"		"			"
		70	"					9/				"				GND						"	1Y3		"		"			"
		71	"							9/		"		GND								"	1Y4		"		"			"
		72									GND	"	9/								9/	"	2Y1		"		"			"
		73							GND			"			9/						"	"	2Y2		"		"			"
		74					GND					"					9/				"	"	2Y3		"		"			"
		75			GND							"							9/		"	"	2Y4		"		"			"
I_{IH}	3010	76	5.5 V	GND		GND		GND		GND		"	GND		GND		GND		GND		GND	"	1G		.05		0.1			"
		77	GND	5.5 V		GND		"		"		"	"		"		"		"		"	"	1A1		"		"			"
		78	"	GND		5.5 V		"		"		"	"		"		"		"		"	"	1A2		"		"			"
		79	"	"		GND		5.5 V		"		"	"		"		"		"		"	"	1A3		"		"			"
		80	"	"		"		GND		5.5 V		"	"		"		"		"		"	"	1A4		"		"			"
		81	"	"		"		"		GND		"	5.5 V		"		"		"		"	"	2A1		"		"			"
		82	"	"		"		"		"		"	GND		5.5 V		"		"		"	"	2A2		"		"			"
		83	"	"		"		"		"		"	"		GND		5.5 V		"		"	"	2A3		"		"			"
		84	"	"		"		"		"		"	"		"		GND		5.5 V		"	"	2A4		"		"			"
		85	"	"		"		"		"		"	"		"		GND		GND		5.5 V	"	2G		"		"			"
I_{IL}	3009	86	"	5.5 V		5.5 V		5.5 V		5.5 V		"	5.5 V		5.5 V		5.5 V		5.5 V		"	"	1G		-.05		-0.1			"
		87	5.5 V	GND		5.5 V		"		"		"	"		"		"		"		"	"	1A1		"		"			"
		88	"	5.5 V		GND		"		"		"	"		"		"		"		"	"	1A2		"		"			"
		89	"	"		5.5 V		GND		"		"	"		"		"		"		"	"	1A3		"		"			"
		90	"	"		"		5.5 V		GND		"	"		"		"		"		"	"	1A4		"		"			"
		91	"	"		"		"		5.5 V		"	GND		"		"		"		"	"	2A1		"		"			"
		92	"	"		"		"		"		"	5.5 V		GND		"		"		"	"	2A2		"		"			"
		93	"	"		"		"		"		"	"		5.5 V		GND		"		"	"	2A3		"		"			"
		94	"	"		"		"		"		"	"		"		5.5 V		GND		"	"	2A4		"		"			"
		95	"	"		"		"		"		"	"		"		5.5 V		5.5 V		GND	"	2G		"		"			"
I_{OS4}	3009	96	GND	4 V		4 V		4 V		4 V		"	4 V		4 V		4 V		4 V	GND		4 V	1Y1	10	135	10	135	10	135	mA
		97	"	"		"		"		"		"	"		"		"	GND	"			"	1Y2	"	"	"	"	"	"	"
		98	"	"		"		"		"		"	"		"	GND	"		"			"	1Y3	"	"	"	"	"	"	"
		99	"	"		"		"		"	GND	"	"		"		"		"			"	1Y4	"	"	"	"	"	"	"
		100		"		"		"	GND	"		"	"		"		"		"		4 V	"	2Y1	"	"	"	"	"	"	"
		101		"		"		"		"		"	"		"		"		"		"	"	2Y2	"	"	"	"	"	"	"
		102		"		"	GND	"		"		"	"		"		"		"		"	"	2Y3	"	"	"	"	"	"	"
		103		"	GND	"		"		"		"	"		"		"		"		"	"	2Y4	"	"	"	"	"	"	"

See footnotes at end of table.

TABLE III. Group A inspection for device type 54 - Continued.

Symbol	MIL-STD-883 method	Cases 2 and K	Terminal conditions 1/																				Measured terminal	Test limits								Unit
			1	2	3	4	5	6	7	8	9	10	11	12	13	14	15	16	17	18	19	20		Subgroup 4 T_C = +25°C							
		Test no.	1G	1A1	2Y4	1A2	2Y3	1A3	2Y2	1A4	2Y1	GND	2A1	1Y4	2A2	1Y3	2A3	1Y2	2A4	1Y1	2G	V_{CC}		Min	Max						
C_I	3012	104	2/									GND										GND	1G		10						pF
		105		2/								"										"	1A1		"						"
		106				2/						"										"	1A2		"						"
		107						2/				"										"	1A3		"						"
		108								2/		"										"	1A4		"						"
		109										"	2/									"	2A1		"						"
		110										"			2/							"	2A2		"						"
		111										"					2/					"	2A3		"						"
		112										"							2/			"	2A4		"						"
		113										"									2/	"	2G		"						"
C_O		114	5.5 V									"		2/		2/		2/		2/	5.5 V	5.5 V	1Y's		20						"
		115	GND		2/		2/		2/		2/	"									GND	5.5 V	2Y's		20						"
																								Subgroup 7 T_C = +25°C		Subgroup 8 T_C = +125°C		Subgroup 8 T_C = -55°C			
																								Min	Max	Min	Max	Min	Max		
Truth table	3014 8/	116	B	B	L	B	L	B	L	B	L	GND	B	L	B	L	B	L	B	L	A	4.5 V	7/								
		117	B	A	H	A	H	A	H	A	H	GND	A	H	A	H	A	H	A	H	A	4.5 V	7/								
																								Subgroup 9 T_C = +25°C		Subgroup 10 T_C = +125°C		Subgroup 11 T_C = -55°C			
																								Min	Max	Min	Max	Min	Max		
t_{PHL}	3003 (Fig. 4)	118	GND	IN		IN		IN		IN		GND				OUT		OUT		OUT		4.5 V	1A1 to 1Y1	8	23	8	30	8	23	ns
		119	"									"										"	1A2 to 1Y2	"	"	"	"	"	"	"
		120	"									"										"	1A3 to 1Y3	"	"	"	"	"	"	"
		121	"									"										"	1A4 to 1Y4	"	"	"	"	"	"	"
		122										"									4.5 V	"	2A1 to 2Y1	"	"	"	"	"	"	"
		123										"									"	"	2A2 to 2Y2	"	"	"	"	"	"	"
		124										"									"	"	2A3 to 2Y3	"	"	"	"	"	"	"
		125			OUT		OUT		OUT		OUT	"	IN	OUT	IN	OUT	IN	OUT	IN		"	"	2A4 to 2Y4	"	"	"	"	"	"	"
t_{PLH}	3003 (Fig. 4)	126	GND	IN		IN		IN		IN		"								OUT		"	1A1 to 1Y1	"	"	"	"	"	"	"
		127	"									"										"	1A2 to 1Y2	"	"	"	"	"	"	"
		128	"									"										"	1A3 to 1Y3	"	"	"	"	"	"	"
		129	"									"										"	1A4 to 1Y4	"	"	"	"	"	"	"
		130										"									4.5 V	"	2A1 to 2Y1	"	"	"	"	"	"	"
		131										"									"	"	2A2 to 2Y2	"	"	"	"	"	"	"
		132										"									"	"	2A3 to 2Y3	"	"	"	"	"	"	"
		133			OUT		OUT		OUT		OUT	"	IN	OUT	IN	OUT	IN	OUT	IN		"	"	2A4 to 2Y4	"	"	"	"	"	"	"
t_{PZH}	3003 (Fig. 4)	134	IN	4.5 V		4.5 V		4.5 V		4.5 V		"								OUT		"	1G to 1Y1	"	33	"	44	"	33	"
		135	"									"										"	1G to 1Y2	"	"	"	"	"	"	"
		136	"									"										"	1G to 1Y3	"	"	"	"	"	"	"
		137	"									"										"	1G to 1Y4	"	"	"	"	"	"	"
		138										"									IN	"	2G to 2Y1	"	"	"	"	"	"	"
		139										"									"	"	2G to 2Y2	"	"	"	"	"	"	"
		140										"									"	"	2G to 2Y3	"	"	"	"	"	"	"
		141			OUT		OUT		OUT		OUT	"	4.5 V	OUT	4.5 V	OUT	4.5 V	OUT	4.5 V		"	"	2G to 2Y4	"	"	"	"	"	"	"

See footnotes at end of table.

MIL-M-38510/557

TABLE III. Group A inspection for device type 54 - Continued.

Symbol	MIL-STD-883 method	Cases 2 and R	Terminal conditions 1/																				Measured terminal	Test limits						Unit
			1	2	3	4	5	6	7	8	9	10	11	12	13	14	15	16	17	18	19	20		Subgroup 4 T_C = +25°C		T_A = +125°C		T_A = -55°C		
		Test no.	1G	1A1	2Y4	1A2	2Y3	1A3	2Y2	1A4	2Y1	GND	2A1	1Y4	2A2	1Y3	2A3	1Y2	2A4	1Y1	2G	V_{CC}		Min	Max	Min	Max	Min	Max	
t_{PZL}	3003 (Fig. 4)	142	IN	GND		GND		GND		GND		GND		OUT		OUT		OUT		OUT		4.5 V	1G to 1Y1	8	33	8	44	8	33	ns
		143	"									"										"	1G to 1Y2	"	"	"	"	"	"	"
		144	"									"										"	1G to 1Y3	"	"	"	"	"	"	"
		145	"									"										"	1G to 1Y4	"	"	"	"	"	"	"
		146										"									IN	"	2G to 2Y1	"	"	"	"	"	"	"
		147										"									"	"	2G to 2Y2	"	"	"	"	"	"	"
		148										"									"	"	2G to 2Y3	"	"	"	"	"	"	"
		149			OUT		OUT		OUT		OUT	"									"	"	2G to 2Y4	"	"	"	"	"	"	"
t_{PHZ}	3003 (Fig. 4)	150	IN	4.5 V		4.5 V		4.5 V		4.5 V		"		OUT		OUT		OUT		OUT		"	1G to 1Y1	"	"	"	"	"	"	"
		151	"									"										"	1G to 1Y2	"	"	"	"	"	"	"
		152	"									"										"	1G to 1Y3	"	"	"	"	"	"	"
		153	"									"										"	1G to 1Y4	"	"	"	"	"	"	"
		154										"									IN	"	2G to 2Y1	"	"	"	"	"	"	"
		155										"									"	"	2G to 2Y2	"	"	"	"	"	"	"
		156										"									"	"	2G to 2Y3	"	"	"	"	"	"	"
		157			OUT		OUT		OUT		OUT	"	4.5 V		4.5 V		4.5 V		4.5 V		"	"	2G to 2Y4	"	"	"	"	"	"	"
t_{PLZ}	3003 (Fig. 4)	158	IN	GND		GND		GND		GND		"		OUT		OUT		OUT		OUT		"	1G to 1Y1	"	"	"	"	"	"	"
		159	"									"										"	1G to 1Y2	"	"	"	"	"	"	"
		160	"									"										"	1G to 1Y3	"	"	"	"	"	"	"
		161	"									"										"	1G to 1Y4	"	"	"	"	"	"	"
		162										"									IN	"	2G to 2Y1	"	"	"	"	"	"	"
		163										"									"	"	2G to 2Y2	"	"	"	"	"	"	"
		164										"									"	"	2G to 2Y3	"	"	"	"	"	"	"
		165			OUT		OUT		OUT		OUT	"	GND		GND		GND		GND		"	"	2G to 2Y4	"	"	"	"	"	"	"
t_{TLH}	3004 (Fig. 4)	166	GND	IN		IN		IN		IN		"		OUT		OUT		OUT		OUT		"	1Y1	2	12	2	16	2	12	ns
		167	"									"										"	1Y2	"	"	"	"	"	"	"
		168	"									"										"	1Y3	"	"	"	"	"	"	"
		169	"									"										"	1Y4	"	"	"	"	"	"	"
		170										"									4.5 V	"	2Y1	"	"	"	"	"	"	"
		171										"									"	"	2Y2	"	"	"	"	"	"	"
		172										"									"	"	2Y3	"	"	"	"	"	"	"
		173			OUT		OUT		OUT		OUT	"	IN		IN		IN		IN		"	"	2Y4	"	"	"	"	"	"	"
t_{THL}	3004 (Fig. 4)	174	GND	IN		IN		IN		IN		"		OUT		OUT		OUT		OUT		"	1Y1	"	"	"	"	"	"	"
		175	"									"										"	1Y2	"	"	"	"	"	"	"
		176	"									"										"	1Y3	"	"	"	"	"	"	"
		177	"									"										"	1Y4	"	"	"	"	"	"	"
		178										"									4.5 V	"	2Y1	"	"	"	"	"	"	"
		179										"									"	"	2Y2	"	"	"	"	"	"	"
		180										"									"	"	2Y3	"	"	"	"	"	"	"
		181			OUT		OUT		OUT		OUT	"	IN		IN		IN		IN		"	"	2Y4	"	"	"	"	"	"	"

See footnotes at end of table.

TABLE III. Group A inspection for device type 55.

Symbol	MIL-STD-883 method	Cases 2 and K	Terminal conditions 1/																				Measured terminal	Test limits						Unit
			1	2	3	4	5	6	7	8	9	10	11	12	13	14	15	16	17	18	19	20		Subgroup 4 T_C = +25°C		T_A = +125°C		T_A = -55°C		
		Test no.	1$\overline{G}$	1A1	2Y4	1A2	2Y3	1A3	2Y2	1A4	2Y1	GND	2A1	1Y4	2A2	1Y3	2A3	1Y2	2A4	1Y1	2$\overline{G}$	V_{CC}		Min	Max	Min	Max	Min	Max	
V_{IC} (pos)		1	1 mA									OPEN										GND	1$\overline{G}$	1/	1.5					V
		2		1 mA								"										"	1A1	"	"					"
		3				1 mA						"										"	1A2	"	"					"
		4						1 mA				"										"	1A3	"	"					"
		5								1 mA		"										"	1A4	"	"					"
		6										"	1 mA									"	2A1	"	"					"
		7										"			1 mA							"	2A2	"	"					"
		8										"					1 mA					"	2A3	"	"					"
		9										"							1 mA			"	2A4	"	"					"
		10										"									1 mA	"	2$\overline{G}$	"	"					"
V_{IC} (neg)		11	-1 mA									GND										OPEN	1$\overline{G}$		-1.5					"
		12		-1 mA								"										"	1A1		"					"
		13				-1 mA						"										"	1A2		"					"
		14						-1 mA				"										"	1A3		"					"
		15								-1 mA		"										"	1A4		"					"
		16										"	-1 mA									"	2A1		"					"
		17										"			-1 mA							"	2A2		"					"
		18										"					-1 mA					"	2A3		"					"
		19										"							-1 mA			"	2A4		"					"
		20										"									-1 mA	"	2$\overline{G}$		"					"
I_{CCH}	3005	21	GND	5.5 V		5.5 V		5.5 V		5.5 V		"	5.5 V		5.5 V		5.5 V		5.5 V		GND	5.5 V	V_{CC}		0.2		20			μA
I_{CCL}	3005	22	GND	GND		GND		GND		GND		"	GND		GND		GND		GND		"	"	"		0.2		20			"
I_{CCa}		23	0.8 V	0.8 V		0.8 V		0.8 V		0.8 V		"	2.4 V		0.8 V		0.8 V		0.8 V		0.8 V	"	"		1.490		1.50			mA
		24	0.8 V	0.8 V		0.8 V		0.8 V		0.8 V		"	0.8 V		0.8 V		0.8 V		0.8 V		2.4 V	"	"		1.490		1.50			mA
I_{CCZ}		25	5.5 V	5.5 V		5.5 V		5.5 V		5.5 V		"	GND		GND		GND		GND		GND	"	"		0.1		10			"
		26	GND	GND		GND		GND		GND		"	5.5 V		5.5 V		5.5 V		5.5 V		5.5 V	"	"		0.1		10			"
V_{OH6}	3006	27	0.8 V	2.0 V								"								-20 μA		4.5 V	1Y1	4.4		4.4		4.4		V
		28	"			2.0 V						"						-20 μA				"	1Y2	"		"		"		"
		29	"					2.0 V				"				-20 μA						"	1Y3	"		"		"		"
		30	"							2.0 V		"		-20 μA								"	1Y4	"		"		"		"
		31									-20 μA	"	2.0 V								10.8 V	"	2Y1	"		"		"		"
		32							-20 μA			"			2.0 V						"	"	2Y2	"		"		"		"
		33					-20 μA					"					2.0 V				"	"	2Y3	"		"		"		"
		34			-20 μA							"							2.0 V		"	"	2Y4	"		"		"		"
V_{OH7}	3006	35	0.8 V	2.0 V								"								-6.0 mA		5.5 V	1Y1	3.98		3.7		3.98		"
		36	"			2.0 V						"						-6.0 mA				"	1Y2	"		"		"		"
		37	"					2.0 V				"				-6.0 mA						"	1Y3	"		"		"		"
		38	"							2.0 V		"		-6.0 mA								"	1Y4	"		"		"		"
		39									-6.0 mA	"	2.0 V								10.8 V	"	2Y1	"		"		"		"
		40							-6.0 mA			"			2.0 V						"	"	2Y2	"		"		"		"
		41					-6.0 mA					"					2.0 V				"	"	2Y3	"		"		"		"
		42			-6.0 mA							"							2.0 V		"	"	2Y4	"		"		"		"
V_{OL6}	3007	43	0.8 V	0.8 V								"								20 μA		4.5 V	1Y1		0.1		0.1		0.1	"
		44	"			0.8 V						"						20 μA				"	1Y2		"		"		"	"
		45	"					0.8 V				"				20 μA						"	1Y3		"		"		"	"
		46	"							0.8 V		"		20 μA								"	1Y4		"		"		"	"
		47									20 μA	"	0.8 V								0.8 V	"	2Y1		"		"		"	"
		48							20 μA			"			0.8 V						"	"	2Y2		"		"		"	"
		49					20 μA					"					0.8 V				"	"	2Y3		"		"		"	"
		50			20 μA							"							0.8 V		"	"	2Y4		"		"		"	"

See footnotes at end of table.

TABLE III. Group A inspection for device type 55 - Continued.

Symbol	MIL-STD-883 method	Cases 2 and R	Terminal conditions 1/																				Measured terminal	Test limits						Unit
			1	2	3	4	5	6	7	8	9	10	11	12	13	14	15	16	17	18	19	20		Subgroup 1 T_C = +25°C		Subgroup 2 T_A = +125°C		Subgroup 3 T_A = -55°C		
		Test no.	1G	1A1	2Y4	1A2	2Y3	1A3	2Y2	1A4	2Y1	GND	2A1	1Y4	2A2	1Y3	2A3	1Y2	2A4	1Y1	2G	V_{CC}		Min	Max	Min	Max	Min	Max	
V_{OL7}	3007	51	0.8 V	0.8 V								GND								6.0 mA		5.5V	1Y1		0.26		0.4		0.26	V
		52	"			0.8 V						"						6.0 mA				"	1Y2		"		"		"	"
		53	"					0.8 V				"				6.0 mA						"	1Y3		"		"		"	"
		54	"							0.8 V		"		6.0 mA								"	1Y4		"		"		"	"
		55									6.0 mA	"	0.8 V								0.8 V	"	2Y1		"		"		"	"
		56							6.0 mA			"			0.8 V						"	"	2Y2		"		"		"	"
		57					6.0 mA					"					0.8 V				"	"	2Y3		"		"		"	"
		58			6.0 mA							"							0.8 V		"	"	2Y4		"		"		"	"
I_{OZH}		59	9/	9/								"								5.5 V		"	1Y1		0.2		2.0			μA
		60	"			9/						"						5.5 V				"	1Y2		"		"			"
		61	"					9/				"				5.5 V						"	1Y3		"		"			"
		62	"							9/		"		5.5 V								"	1Y4		"		"			"
		63									5.5 V	"	9/								9/	"	2Y1		"		"			"
		64							5.5 V			"			9/						"	"	2Y2		"		"			"
		65					5.5 V					"					9/				"	"	2Y3		"		"			"
		66			5.5 V							"							9/		"	"	2Y4		"		"			"
I_{OZL}		67	9/	9/								"								GND		"	1Y1		-0.2		-2.0			"
		68	"			9/						"						GND				"	1Y2		"		"			"
		69	"					9/				"				GND						"	1Y3		"		"			"
		70	"							9/		"		GND								"	1Y4		"		"			"
		71									GND	"	9/								9/	"	2Y1		"		"			"
		72							GND			"			9/						"	"	2Y2		"		"			"
		73					GND					"					9/				"	"	2Y3		"		"			"
		74			GND							"							9/		"	"	2Y4		"		"			"
I_{IH}	3010	75	5.5 V	GND		GND		GND		GND		"	GND		GND		GND		GND		GND	"	1G		.05		0.1			"
		76	GND	5.5 V		GND		"		"		"	"		"		"		"		"	"	1A1		"		"			"
		77	"	GND		5.5 V		"		"		"	"		"		"		"		"	"	1A2		"		"			"
		78	"	"		GND		5.5 V		"		"	"		"		"		"		"	"	1A3		"		"			"
		79	"	"		"		GND		5.5 V		"	"		"		"		"		"	"	1A4		"		"			"
		80	"	"		"		"		GND		"	5.5 V		"		"		"		"	"	2A1		"		"			"
		81	"	"		"		"		"		"	GND		5.5 V		"		"		"	"	2A2		"		"			"
		82	"	"		"		"		"		"	"		GND		5.5 V		"		"	"	2A3		"		"			"
		83	"	"		"		"		"		"	"		"		GND		5.5 V		"	"	2A4		"		"			"
		84	"	"		"		"		"		"	"		"		GND		GND		5.5 V	"	2G		"		"			"
I_{IL}	3009	85	"	5.5 V		5.5 V		5.5 V		5.5 V		"	5.5 V		5.5 V		5.5 V		5.5 V		"	"	1G		-.05		-0.1			"
		86	5.5 V	GND		5.5 V		"		"		"	"		"		"		"		"	"	1A1		"		"			"
		87	"	5.5 V		GND		"		"		"	"		"		"		"		"	"	1A2		"		"			"
		88	"	"		5.5 V		GND		"		"	"		"		"		"		"	"	1A3		"		"			"
		89	"	"		"		5.5 V		GND		"	"		"		"		"		"	"	1A4		"		"			"
		90	"	"		"		"		5.5 V		"	GND		"		"		"		"	"	2A1		"		"			"
		91	"	"		"		"		"		"	5.5 V		GND		"		"		"	"	2A2		"		"			"
		92	"	"		"		"		"		"	"		5.5 V		GND		"		"	"	2A3		"		"			"
		93	"	"		"		"		"		"	"		"		5.5 V		GND		"	"	2A4		"		"			"
		94	"	"		"		"		"		"	"		"		5.5 V		5.5 V		GND	"	2G		"		"			"
I_{OS4}	3011	95	GND	4 V		4 V		4 V		4 V		"	4 V		4 V		4 V		4 V	GND		4 V	1Y1	-10	-135	-10	-135	-10	-135	mA
		96	"	"		"		"		"		"	"		"		"	GND	"			"	1Y2	"	"	"	"	"	"	"
		97	"	"		"		"		"		"	"		"	GND	"		"			"	1Y3	"	"	"	"	"	"	"
		98		"		"		"		"	GND	"	"		"		"		"			"	1Y4	"	"	"	"	"	"	"
		99		"		"		"	GND	"		"	"		"		"		"		GND	"	2Y1	"	"	"	"	"	"	"
		100		"		"	GND	"		"		"	"		"		"		"		"	"	2Y2	"	"	"	"	"	"	"
		101		"	GND	"		"		"		"	"		"		"		"		"	"	2Y3	"	"	"	"	"	"	"
		102		"		"		"		"		"	"		"		"		"		"	"	2Y4	"	"	"	"	"	"	"

See footnotes at end of table.

TABLE III. Group A inspection for device type 55 - Continued.

Symbol	MIL-STD-883 method	Cases 2 and W	Terminal conditions 1/																				Measured terminal	Test limits						Unit
			1	2	3	4	5	6	7	8	9	10	11	12	13	14	15	16	17	18	19	20		Subgroup 4 T_C = +25°C						
		Test no.	$1\overline{G}$	1A1	2Y4	1A2	2Y3	1A3	2Y2	1A4	2Y1	GND	2A1	1Y4	2A2	1Y3	2A3	1Y2	2A4	1Y1	$2\overline{G}$	V_{CC}		Min	Max					
C_I	3012	103	2/									GND										GND	$1\overline{G}$		10					pF
		104		2/								"										"	1A1		"					"
		105				2/						"										"	1A2		"					"
		106						2/				"										"	1A3		"					"
		107								2/		"										"	1A4		"					"
		108										"	2/									"	2A1		"					"
		109										"			2/							"	2A2		"					"
		110										"					2/					"	2A3		"					"
		111										"							2/			"	2A4		"					"
		112										"									2/	"	$2\overline{G}$		"					"
C_O		113	5.5 V									"										5.5 V	1Y's		20					"
		114	GND		2/		2/		2/		2/	"		2/		2/		2/		2/	GND	5.5 V			20					"
																					15.5 V									
																								Subgroup 7 T_C = +25°C		Subgroup 8 T_C = +125°C		Subgroup 9 T_C = -55°C		
																								Min	Max	Min	Max	Min	Max	
Truth table	3014 8/	115	B	B	L	B	L	B	L	B	L	GND	B	L	B	L	B	L	B	L	B	4.5 V	7/							
		116	B	A	H	A	H	A	H	A	H	GND	A	H	A	H	A	H	A	H	B	4.5 V	7/							
																								Subgroup 9 T_C = +25°C		Subgroup 10 T_C = +125°C		Subgroup 11 T_C = -55°C		
																								Min	Max	Min	Max	Min	Max	
t_{PHL}	3003 (Fig. 4)	117	GND	IN								GND										4.5 V	1A1 to 1Y1	8	25	8	33	8	25	ns
		118	"			IN						"										"	1A2 to 1Y2	"	"	"	"	"	"	"
		119	"					IN				"										"	1A3 to 1Y3	"	"	"	"	"	"	"
		120	"							IN		"				OUT						"	1A4 to 1Y4	"	"	"	"	"	"	"
		121									OUT	"						OUT				"	2A1 to 2Y1	"	"	"	"	"	"	"
		122							OUT			"	IN								GND	"	2A2 to 2Y2	"	"	"	"	"	"	"
		123					OUT					"		OUT							"	"	2A3 to 2Y3	"	"	"	"	"	"	"
		124			OUT							"			IN		IN				"	"	2A4 to 2Y4	"	"	"	"	"	"	"
t_{PLH}	3003 (Fig. 4)	125	GND	IN								"										"	1A1 to 1Y1	"	"	"	"	"	"	"
		126	"			IN						"										"	1A2 to 1Y2	"	"	"	"	"	"	"
		127	"					IN				"				OUT						"	1A3 to 1Y3	"	"	"	"	"	"	"
		128	"							IN		"						OUT				"	1A4 to 1Y4	"	"	"	"	"	"	"
		129									OUT	"										"	2A1 to 2Y1	"	"	"	"	"	"	"
		130							OUT			"	IN								GND	"	2A2 to 2Y2	"	"	"	"	"	"	"
		131					OUT					"		OUT							"	"	2A3 to 2Y3	"	"	"	"	"	"	"
		132			OUT							"			IN		IN				"	"	2A4 to 2Y4	"	"	"	"	"	"	"
t_{PZL}	3003 (Fig. 4)	133	IN	GND								"										"	$1\overline{G}$ to 1Y1	"	31	"	41	"	31	"
		134	"			GND						"										"	$1\overline{G}$ to 1Y2	"	"	"	"	"	"	"
		135	"					GND				"				OUT						"	$1\overline{G}$ to 1Y3	"	"	"	"	"	"	"
		136	"							GND		"		OUT				OUT				"	$1\overline{G}$ to 1Y4	"	"	"	"	"	"	"
		137									OUT	"	GND								IN	"	$2\overline{G}$ to 2Y1	"	"	"	"	"	"	"
		138							OUT			"			GND						"	"	$2\overline{G}$ to 2Y2	"	"	"	"	"	"	"
		139					OUT					"					GND				"	"	$2\overline{G}$ to 2Y3	"	"	"	"	"	"	"
		140			OUT							"							GND		"	"	$2\overline{G}$ to 2Y4	"	"	"	"	"	"	"

See footnotes at end of table.

TABLE III. Group A inspection for device type 55 - Continued.

Symbol	MIL-STD-883 method	Cases 2 and R	Terminal conditions 1/																				Measured terminal	Test limits						Unit
			1	2	3	4	5	6	7	8	9	10	11	12	13	14	15	16	17	18	19	20		Subgroup 9 T_C = +25°C		Subgroup 10 T_A = +125°C		Subgroup 11 T_A = -55°C		
		Test no.	1G̅	1A1	2Y4	1A2	2Y3	1A3	2Y2	1A4	2Y1	GND	2A1	1Y4	2A2	1Y3	2A3	1Y2	2A4	1Y1	2G̅	V_{CC}		Min	Max	Min	Max	Min	Max	
t_{PZH}	3003 (Fig. 4)	141	IN	4.5 V		4.5 V		4.5 V		4.5 V		GND						OUT		OUT		4.5 V	1G̅ to 1Y1	8	31	8	41	8	31	ns
		142	"									"										"	1G̅ to 1Y2	"	"	"	"	"	"	"
		143	"									"				OUT						"	1G̅ to 1Y3	"	"	"	"	"	"	"
		144	"									"										"	1G̅ to 1Y4	"	"	"	"	"	"	"
		145										"									IN	"	2G̅ to 2Y1	"	"	"	"	"	"	"
		146										"									"	"	2G̅ to 2Y2	"	"	"	"	"	"	"
		147										"									"	"	2G̅ to 2Y3	"	"	"	"	"	"	"
		148										"									"	"	2G̅ to 2Y4	"	"	"	"	"	"	"
t_{PLZ}	3003 (Fig. 4)	149	IN	GND		GND		GND		GND		"						OUT		OUT		"	1G̅ to 1Y1	"	"	"	"	"	"	"
		150	"									"										"	1G̅ to 1Y2	"	"	"	"	"	"	"
		151	"									"										"	1G̅ to 1Y3	"	"	"	"	"	"	"
		152	"									"										"	1G̅ to 1Y4	"	"	"	"	"	"	"
		153										"									IN	"	2G̅ to 2Y1	"	"	"	"	"	"	"
		154										"									"	"	2G̅ to 2Y2	"	"	"	"	"	"	"
		155										"									"	"	2G̅ to 2Y3	"	"	"	"	"	"	"
		156										"									"	"	2G̅ to 2Y4	"	"	"	"	"	"	"
t_{PHZ}	3003 (Fig. 4)	157	IN	4.5 V		4.5 V		4.5 V		4.5 V		"						OUT		OUT		"	1G̅ to 1Y1	"	"	"	"	"	"	"
		158	"									"										"	1G̅ to 1Y2	"	"	"	"	"	"	"
		159	"									"										"	1G̅ to 1Y3	"	"	"	"	"	"	"
		160	"									"										"	1G̅ to 1Y4	"	"	"	"	"	"	"
		161										"									IN	"	2G̅ to 2Y1	"	"	"	"	"	"	"
		162										"									"	"	2G̅ to 2Y2	"	"	"	"	"	"	"
		163										"									"	"	2G̅ to 2Y3	"	"	"	"	"	"	"
		164										"									"	"	2G̅ to 2Y4	"	"	"	"	"	"	"
t_{TLH}	3004 (Fig. 4)	165	GND	IN		IN		IN		IN		"						OUT		OUT		"	1Y1	2	12	2	16	2	12	"
		166	"									"										"	1Y2	"	"	"	"	"	"	"
		167	"									"										"	1Y3	"	"	"	"	"	"	"
		168	"									"										"	1Y4	"	"	"	"	"	"	"
		169										"									GND	"	2Y1	"	"	"	"	"	"	"
		170										"									"	"	2Y2	"	"	"	"	"	"	"
		171										"									"	"	2Y3	"	"	"	"	"	"	"
		172										"									"	"	2Y4	"	"	"	"	"	"	"
t_{THL}	3004 (Fig. 4)	173	GND	IN		IN		IN		IN		"						OUT		OUT		"	1Y1	"	"	"	"	"	"	"
		174	"									"										"	1Y2	"	"	"	"	"	"	"
		175	"									"										"	1Y3	"	"	"	"	"	"	"
		176	"									"										"	1Y4	"	"	"	"	"	"	"
		177										"									GND	"	2Y1	"	"	"	"	"	"	"
		178										"									"	"	2Y2	"	"	"	"	"	"	"
		179										"									"	"	2Y3	"	"	"	"	"	"	"
		180										"									"	"	2Y4	"	"	"	"	"	"	"

See footnotes at end of table.

TABLE III. Group A inspection for device type 60.

Symbol	MIL-STD-883 method	Cases 2 and R	Terminal conditions 1/																				Measured terminal	Test limits						Unit
			1	2	3	4	5	6	7	8	9	10	11	12	13	14	15	16	17	18	19	20		Subgroup 1 T_C = +25°C		Subgroup 2 T_A = +125°C		Subgroup 3 T_A = -55°C		
		Test no.	1G	1A	2A	3A	4A	5A	6A	7A	8A	GND	8Y	7Y	6Y	5Y	4Y	3Y	2Y	1Y	2G	V_{CC}		Min	Max	Min	Max	Min	Max	
V_{IC} (pos)		1	1 mA									OPEN										GND	1G	1/	1.5					V
		2		1 mA								"										"	1A	"	"					"
		3			1 mA							"										"	2A	"	"					"
		4				1 mA						"										"	3A	"	"					"
		5					1 mA					"										"	4A	"	"					"
		6						1 mA				"										"	5A	"	"					"
		7							1 mA			"										"	6A	"	"					"
		8								1 mA		"										"	7A	"	"					"
		9									1 mA	"										"	8A	"	"					"
		10										"									1 mA	"	2G	"	"					"
V_{IC} (neg)		11	-1 mA									GND										OPEN	1G		-1.5					"
		12		-1 mA								"										"	1A		"					"
		13			-1 mA							"										"	2A		"					"
		14				-1 mA						"										"	3A		"					"
		15					-1 mA					"										"	4A		"					"
		16						-1 mA				"										"	5A		"					"
		17							-1 mA			"										"	6A		"					"
		18								-1 mA		"										"	7A		"					"
		19									-1 mA	"										"	8A		"					"
		20										"									-1 mA	"	2G		"					"
I_{CC}	3005	21	GND	GND	GND	GND	GND	GND	GND	GND	GND	"									GND	5.5 V	V_{CC}		0.2		20			μA
I_{CC}	3006	22	GND	5.5 V	5.5 V	5.5 V	5.5 V	5.5 V	5.5 V	5.5 V	5.5 V	"									GND	"	"		0.2		20			μA
I_{CCA}		23	0.8 V	2.4 V	0.8 V	0.8 V	0.8 V	0.8 V	0.8 V	0.8 V	0.8 V	"									0.8 V	"	"		1.490		1.50			mA
		24	2.4 V	0.8 V	0.8 V	0.8 V	0.8 V	0.8 V	0.8 V	0.8 V	0.8 V	"									0.8 V	"	"		1.490		1.50			mA
I_{CCZ}		25	5.5 V	5.5 V	5.5 V	5.5 V	5.5 V	GND	GND	GND	GND	"									GND	"	"		0.1		10			μA
		26	GND	GND	GND	GND	GND	5.5 V	5.5 V	5.5 V	5.5 V	"									5.5 V	"	"		0.1		10			μA
V_{OH6}	3006	27	0.8 V	0.8 V								"								-20 μA	0.8 V	4.5 V	1Y	4.4		4.4		4.4		V
		28	"		0.8 V							"							-20 μA		"	"	2Y	"		"		"		"
		29	"			0.8 V						"						-20 μA			"	"	3Y	"		"		"		"
		30	"				0.8 V					"					-20 μA				"	"	4Y	"		"		"		"
		31	"					0.8 V				"				-20 μA					"	"	5Y	"		"		"		"
		32	"						0.8 V			"			-20 μA						"	"	6Y	"		"		"		"
		33	"							0.8 V		"		-20 μA							"	"	7Y	"		"		"		"
		34	"								0.8 V	"	-20 μA								"	"	8Y	"		"		"		"
V_{OH7}	3006	35	0.8 V	0.8 V								"								-6.0 mA	"	5.5 V	1Y	3.98		3.7		3.99		"
		36	"		0.8 V							"							-6.0 mA		"	"	2Y	"		"		"		"
		37	"			0.8 V						"						-6.0 mA			"	"	3Y	"		"		"		"
		38	"				0.8 V					"					-6.0 mA				"	"	4Y	"		"		"		"
		39	"					0.8 V				"				-6.0 mA					"	"	5Y	"		"		"		"
		40	"						0.8 V			"			-6.0 mA						"	"	6Y	"		"		"		"
		41	"							0.8 V		"		-6.0 mA							"	"	7Y	"		"		"		"
		42	"								0.8 V	"	-6.0 mA								"	"	8Y	"		"		"		"
V_{OL6}	3007	43	0.8 V	2.0 V								"								20 μA	"	4.5 V	1Y		0.1		0.1		0.1	"
		44	"		2.0 V							"							20 μA		"	"	2Y		"		"		"	"
		45	"			2.0 V						"						20 μA			"	"	3Y		"		"		"	"
		46	"				2.0 V					"					20 μA				"	"	4Y		"		"		"	"
		47	"					2.0 V				"				20 μA					"	"	5Y		"		"		"	"
		48	"						2.0 V			"			20 μA						"	"	6Y		"		"		"	"
		49	"							2.0 V		"		20 μA							"	"	7Y		"		"		"	"
		50	"								2.0 V	"	20 μA								"	"	8Y		"		"		"	"

See footnotes at end of table.

TABLE III. Group A inspection for device type 60 - Continued.

Symbol	MIL-STD-883 method	Cases 2 and K	Terminal conditions 1/																				Measured terminal	Test limits						Unit
			1	2	3	4	5	6	7	8	9	10	11	12	13	14	15	16	17	18	19	20		Subgroup 1 T_C = +25°C		Subgroup 2 T_A = +125°C		Subgroup 3 T_A = -55°C		
		Test no.	1$\overline{G}$	1A	2A	3A	4A	5A	6A	7A	8A	GND	8Y	7Y	6Y	5Y	4Y	3Y	2Y	1Y	2$\overline{G}$	V_{CC}		Min	Max	Min	Max	Min	Max	
V_{OL7}	3007	51	0.8 V	2.0 V								GND								6.0 mA	0.8 V	5.5 V	1Y		0.26		0.4		0.26	V
		52	"		2.0 V							"							6.0 mA		"	"	2Y		"		"		"	"
		53	"			2.0 V						"						6.0 mA			"	"	3Y		"		"		"	"
		54	"				2.0 V					"					6.0 mA				"	"	4Y		"		"		"	"
		55	"					2.0 V				"				6.0 mA					"	"	5Y		"		"		"	"
		56	"						2.0 V			"			6.0 mA						"	"	6Y		"		"		"	"
		57	"							2.0 V		"		6.0 mA							"	"	7Y		"		"		"	"
		58	"								2.0 V	"	6.0 mA								"	"	8Y		"		"		"	"
I_{OZH}		59	"	9/								"									9/	"	1Y		0.2		2.0			μA
		60	"		9/							"							5.5 V	5.5 V	"	"	2Y		"		"			"
		61	"			9/						"						5.5 V			"	"	3Y		"		"			"
		62	"				9/					"					5.5 V				"	"	4Y		"		"			"
		63	"					9/				"				5.5 V					"	"	5Y		"		"			"
		64	"						9/			"			5.5 V						"	"	6Y		"		"			"
		65	"							9/		"		5.5 V							"	"	7Y		"		"			"
		66	"								9/	"	5.5 V								"	"	8Y		"		"			"
I_{OZL}		67	9/	9/								"								GND	0.8 V	"	1Y		-0.2		-2.0			"
		68	"		9/							"							GND		"	"	2Y		"		"			"
		69	"			9/						"						GND			"	"	3Y		"		"			"
		70	"				9/					"					GND				"	"	4Y		"		"			"
		71	"					9/				"				GND					"	"	5Y		"		"			"
		72	"						9/			"			GND						"	"	6Y		"		"			"
		73	"							9/		"		GND							"	"	7Y		"		"			"
		74	"								9/	"	GND								"	"	8Y		"		"			"
I_{IH}	3010	75	5.5 V	GND	GND	GND	GND	GND	GND	GND	GND	"									GND	"	1$\overline{G}$		.05		0.1			"
		76	GND	5.5 V	GND	"	"	"	"	"	"	"									"	"	1A		"		"			"
		77	"	GND	5.5 V	"	"	"	"	"	"	"									"	"	2A		"		"			"
		78	"	"	GND	5.5 V	"	"	"	"	"	"									"	"	3A		"		"			"
		79	"	"	"	GND	5.5 V	"	"	"	"	"									"	"	4A		"		"			"
		80	"	"	"	"	GND	5.5 V	"	"	"	"									"	"	5A		"		"			"
		81	"	"	"	"	"	GND	5.5 V	"	"	"									"	"	6A		"		"			"
		82	"	"	"	"	"	"	GND	5.5 V	"	"									"	"	7A		"		"			"
		83	"	"	"	"	"	"	"	GND	5.5 V	"									"	"	8A		"		"			"
		84	"	"	"	"	"	"	"	GND	GND	"									5.5 V	"	2$\overline{G}$		"		"			"
I_{IL}	3009	85	GND	5.5 V	5.5 V	5.5 V	5.5 V	5.5 V	5.5 V	5.5 V	5.5 V	"									"	"	1$\overline{G}$		.05		0.1			"
		86	5.5 V	GND	5.5 V	"	"	"	"	"	"	"									"	"	1A		"		"			"
		87	"	5.5 V	GND	"	"	"	"	"	"	"									"	"	2A		"		"			"
		88	"	"	5.5 V	GND	"	"	"	"	"	"									"	"	3A		"		"			"
		89	"	"	"	5.5 V	GND	"	"	"	"	"									"	"	4A		"		"			"
		90	"	"	"	"	5.5 V	GND	"	"	"	"									"	"	5A		"		"			"
		91	"	"	"	"	"	5.5 V	GND	"	"	"									"	"	6A		"		"			"
		92	"	"	"	"	"	"	5.5 V	GND	"	"									"	"	7A		"		"			"
		93	"	"	"	"	"	"	"	5.5 V	GND	"									"	"	8A		"		"			"
		94	"	"	"	"	"	"	"	5.5 V	5.5 V	"									GND	"	2$\overline{G}$		"		"			"

See footnotes at end of table.

TABLE III. Group A inspection for device type 60 - Continued.

Symbol	MIL-STD-883 method	Cases 2 and R	Terminal conditions 1/																				Measured terminal	Test limits						Unit
			1	2	3	4	5	6	7	8	9	10	11	12	13	14	15	16	17	18	19	20		Subgroup 1 T_C = +25°C		Subgroup 2 T_A = +125°C		Subgroup 3 T_A = -55°C		
		Test no.	1G	1A	2A	3A	4A	5A	6A	7A	8A	GND	8Y	7Y	6Y	5Y	4Y	3Y	2Y	1Y	2G	V_{CC}		Min	Max	Min	Max	Min	Max	
I_{OS4}	3011	95	GND	GND	GND	GND	GND	GND	GND	GND	GND	GND	GND	GND	GND	GND	GND	GND	GND	GND	GND	4 V	1Y	-10	-135	-10	-135	-10	-135	mA
		96	"									"									"	"	2Y	"	"	"	"	"	"	"
		97	"									"									"	"	3Y	"	"	"	"	"	"	"
		98	"									"									"	"	4Y	"	"	"	"	"	"	"
		99	"									"									"	"	5Y	"	"	"	"	"	"	"
		100	"									"									"	"	6Y	"	"	"	"	"	"	"
		101	"									"									"	"	7Y	"	"	"	"	"	"	"
		102	"									"									"	"	8Y	"	"	"	"	"	"	"
																								Subgroup 4 T_C = +25°C						
																								Min	Max					
C_I	3012	103	2/	2/	2/	2/	2/	2/	2/	2/	2/	GND										GND	1G		10					pF
		104										"										"	1A		"					"
		105										"										"	2A		"					"
		106										"										"	3A		"					"
		107										"										"	4A		"					"
		108										"										"	5A		"					"
		109										"										"	6A		"					"
		110										"										"	7A		"					"
		111										"										"	8A		"					"
		112										"									2/	"	2G		"					"
C_O		113	GND									"	2/	2/	2/	2/	2/	2/	2/	2/	5.5 V	5.5 V	Y's		20					"
		114	5.5 V									"									GND	5.5 V	Y's		20					"
																								Subgroup 7 T_C = +25°C		Subgroup 8 T_C = +125°C		Subgroup 8 T_C = -55°C		
																								Min	Max	Min	Max	Min	Max	
Truth table	8/	115	B	B	B	B	B	B	B	B	B	GND	H	H	H	H	H	H	H	H	B	4.5 V	7/							
		116	B	A	A	A	A	A	A	A	A	GND	L	L	L	L	L	L	L	L	B	4.5 V	7/							
																								Subgroup 9 T_C = +25°C		Subgroup 10 T_C = +125°C		Subgroup 11 T_C = -55°C		
																								Min	Max	Min	Max	Min	Max	
t_{PHL}	3003 (Fig. 4)	117	GND	IN	IN	IN	IN	IN	IN	IN	IN	GND	OUT	OUT	OUT	OUT	OUT	OUT	OUT	OUT	GND	4.5 V	11A to 1Y	10	26	10	35	10	26	ns
		118	"									"									"	"	12A to 2Y	"	"	"	"	"	"	"
		119	"									"									"	"	13A to 3Y	"	"	"	"	"	"	"
		120	"									"									"	"	14A to 4Y	"	"	"	"	"	"	"
		121	"									"									"	"	15A to 5Y	"	"	"	"	"	"	"
		122	"									"									"	"	16A to 6Y	"	"	"	"	"	"	"
		123	"									"									"	"	17A to 7Y	"	"	"	"	"	"	"
		124	"									"									"	"	18A to 8Y	"	"	"	"	"	"	"
t_{PLH}	3003 (Fig. 4)	125	"	IN	IN	IN	IN	IN	IN	IN	IN	"	OUT	OUT	OUT	OUT	OUT	OUT	OUT	OUT	"	"	11A to 1Y	"	"	"	"	"	"	"
		126	"									"									"	"	12A to 2Y	"	"	"	"	"	"	"
		127	"									"									"	"	13A to 3Y	"	"	"	"	"	"	"
		128	"									"									"	"	14A to 4Y	"	"	"	"	"	"	"
		129	"									"									"	"	15A to 5Y	"	"	"	"	"	"	"
		130	"									"									"	"	16A to 6Y	"	"	"	"	"	"	"
		131	"									"									"	"	17A to 7Y	"	"	"	"	"	"	"
		132	"									"									"	"	18A to 8Y	"	"	"	"	"	"	"
t_{PZH}	3003 (Fig. 4)	133	IN	GND	GND	GND	GND	GND	GND	GND	GND	"	OUT	OUT	OUT	OUT	OUT	OUT	OUT	OUT	"	"	11A to 1Y	"	40	"	55	"	40	"
		134	"									"									"	"	12A to 2Y	"	"	"	"	"	"	"
		135	"									"									"	"	13A to 3Y	"	"	"	"	"	"	"
		136	"									"									"	"	14A to 4Y	"	"	"	"	"	"	"
		137	"									"									"	"	15A to 5Y	"	"	"	"	"	"	"
		138	"									"									"	"	16A to 6Y	"	"	"	"	"	"	"
		139	"									"									"	"	17A to 7Y	"	"	"	"	"	"	"
		140	"									"									"	"	18A to 8Y	"	"	"	"	"	"	"

See footnotes at end of table.

TABLE III. Group A inspection for device type 60 - Continued.

Symbol	MIL-STD-883 method	Cases 2 and R	Terminal conditions 1/																				Measured terminal	Test limits						Unit
			1	2	3	4	5	6	7	8	9	10	11	12	13	14	15	16	17	18	19	20		Subgroup 9 T_C = +25°C		Subgroup 10 T_A = +125°C		Subgroup 11 T_A = -55°C		
		Test no.	1G	1A	2A	3A	4A	5A	6A	7A	8A	GND	8Y	7Y	6Y	5Y	4Y	3Y	2Y	1Y	2G	V_{CC}		Min	Max	Min	Max	Min	Max	
t_{PZH}	3003 (Fig. 4)	141	GND	GND	GND	GND	GND	GND	GND	GND	GND	GND	OUT	OUT	OUT	OUT	OUT	OUT	OUT	OUT	IN	4.5 V	2G to 1Y	10	40	10	53	10	40	ns
		142	"									"									"	"	2G to 2Y	"	"	"	"	"	"	"
		143	"									"									"	"	2G to 3Y	"	"	"	"	"	"	"
		144	"									"									"	"	2G to 4Y	"	"	"	"	"	"	"
		145	"									"									"	"	2G to 5Y	"	"	"	"	"	"	"
		146	"									"									"	"	2G to 6Y	"	"	"	"	"	"	"
		147	"									"									"	"	2G to 7Y	"	"	"	"	"	"	"
		148	"									"									"	"	2G to 8Y	"	"	"	"	"	"	"
t_{PZL}	3003 (Fig. 4)	149	IN	4.5 V	4.5 V	4.5 V	4.5 V	4.5 V	4.5 V	4.5 V	4.5 V	"	OUT	OUT	OUT	OUT	OUT	OUT	OUT	OUT	GND	"	1G to 1Y	"	"	"	"	"	"	"
		150	"									"									"	"	1G to 2Y	"	"	"	"	"	"	"
		151	"									"									"	"	1G to 3Y	"	"	"	"	"	"	"
		152	"									"									"	"	1G to 4Y	"	"	"	"	"	"	"
		153	"									"									"	"	1G to 5Y	"	"	"	"	"	"	"
		154	"									"									"	"	1G to 6Y	"	"	"	"	"	"	"
		155	"									"									"	"	1G to 7Y	"	"	"	"	"	"	"
		156	"									"									"	"	1G to 8Y	"	"	"	"	"	"	"
		157	GND	4.5 V	4.5 V	4.5 V	4.5 V	4.5 V	4.5 V	4.5 V	4.5 V	"	OUT	OUT	OUT	OUT	OUT	OUT	OUT	OUT	IN	"	2G to 1Y	"	"	"	"	"	"	"
		158	"									"									"	"	2G to 2Y	"	"	"	"	"	"	"
		159	"									"									"	"	2G to 3Y	"	"	"	"	"	"	"
		160	"									"									"	"	2G to 4Y	"	"	"	"	"	"	"
		161	"									"									"	"	2G to 5Y	"	"	"	"	"	"	"
		162	"									"									"	"	2G to 6Y	"	"	"	"	"	"	"
		163	"									"									"	"	2G to 7Y	"	"	"	"	"	"	"
		164	"									"									"	"	2G to 8Y	"	"	"	"	"	"	"
t_{PLZ}	3003 (Fig. 4)	165	IN	4.5 V	4.5 V	4.5 V	4.5 V	4.5 V	4.5 V	4.5 V	4.5 V	"	OUT	OUT	OUT	OUT	OUT	OUT	OUT	OUT	GND	"	1G to 1Y	"	31	"	41	"	31	"
		166	"									"									"	"	1G to 2Y	"	"	"	"	"	"	"
		167	"									"									"	"	1G to 3Y	"	"	"	"	"	"	"
		168	"									"									"	"	1G to 4Y	"	"	"	"	"	"	"
		169	"									"									"	"	1G to 5Y	"	"	"	"	"	"	"
		170	"									"									"	"	1G to 6Y	"	"	"	"	"	"	"
		171	"									"									"	"	1G to 7Y	"	"	"	"	"	"	"
		172	"									"									"	"	1G to 8Y	"	"	"	"	"	"	"
		173	GND	4.5 V	4.5 V	4.5 V	4.5 V	4.5 V	4.5 V	4.5 V	4.5 V	"	OUT	OUT	OUT	OUT	OUT	OUT	OUT	OUT	IN	"	2G to 1Y	"	"	"	"	"	"	"
		174	"									"									"	"	2G to 2Y	"	"	"	"	"	"	"
		175	"									"									"	"	2G to 3Y	"	"	"	"	"	"	"
		176	"									"									"	"	2G to 4Y	"	"	"	"	"	"	"
		177	"									"									"	"	2G to 5Y	"	"	"	"	"	"	"
		178	"									"									"	"	2G to 6Y	"	"	"	"	"	"	"
		179	"									"									"	"	2G to 7Y	"	"	"	"	"	"	"
		180	"									"									"	"	2G to 8Y	"	"	"	"	"	"	"
t_{PHZ}	3003 (Fig. 4)	181	IN	GND	GND	GND	GND	GND	GND	GND	GND	"	OUT	OUT	OUT	OUT	OUT	OUT	OUT	OUT	GND	"	1G to 1Y	"	"	"	"	"	"	"
		182	"									"									"	"	1G to 2Y	"	"	"	"	"	"	"
		183	"									"									"	"	1G to 3Y	"	"	"	"	"	"	"
		184	"									"									"	"	1G to 4Y	"	"	"	"	"	"	"
		185	"									"									"	"	1G to 5Y	"	"	"	"	"	"	"
		186	"									"									"	"	1G to 6Y	"	"	"	"	"	"	"
		187	"									"									"	"	1G to 7Y	"	"	"	"	"	"	"
		188	"									"									"	"	1G to 8Y	"	"	"	"	"	"	"

See footnotes at end of table.

TABLE III. Group A inspection for device type 60 - Continued.

Symbol	MIL-STD-883 method	Cases 2 and R	Terminal conditions 1/																				Measured terminal	Test Limits						Unit
			1	2	3	4	5	6	7	8	9	10	11	12	13	14	15	16	17	18	19	20		Subgroup 9 T_C = +25°C		Subgroup 10 T_C = +125°C		Subgroup 11 T_C = -55°C		
		Test no.	1G	1A	2A	3A	4A	5A	6A	7A	8A	GND	8Y	7Y	6Y	5Y	4Y	3Y	2Y	1Y	2G	V_{CC}		Min	Max	Min	Max	Min	Max	
t_{PHZ}	3003 (Fig. 4)	189	GND	GND	GND	GND	GND	GND	GND	GND	GND	GND	OUT	OUT	OUT	OUT	OUT	OUT	OUT	OUT	IN	4.5 V	2G to 1Y	10	31	10	41	10	31	ns
		190	"									"									"	"	2G to 2Y	"	"	"	"	"	"	"
		191	"									"									"	"	2G to 3Y	"	"	"	"	"	"	"
		192	"									"									"	"	2G to 4Y	"	"	"	"	"	"	"
		193	"									"									"	"	2G to 5Y	"	"	"	"	"	"	"
		194	"									"									"	"	2G to 6Y	"	"	"	"	"	"	"
		195	"									"									"	"	2G to 7Y	"	"	"	"	"	"	"
		196	"									"									"	"	2G to 8Y	"	"	"	"	"	"	"
t_{TLH}	3004 (Fig. 4)	197	GND	IN	IN	IN	IN	IN	IN	IN	IN	"	OUT	OUT	OUT	OUT	OUT	OUT	OUT	OUT	GND	"	1Y	2	12	2	16	2	12	"
		198	"									"									"	"	2Y	"	"	"	"	"	"	"
		199	"									"									"	"	3Y	"	"	"	"	"	"	"
		200	"									"									"	"	4Y	"	"	"	"	"	"	"
		201	"									"									"	"	5Y	"	"	"	"	"	"	"
		202	"									"									"	"	6Y	"	"	"	"	"	"	"
		203	"									"									"	"	7Y	"	"	"	"	"	"	"
		204	"									"									"	"	8Y	"	"	"	"	"	"	"
t_{THL}	3004 (Fig. 4)	205	GND	IN	IN	IN	IN	IN	IN	IN	IN	"	OUT	OUT	OUT	OUT	OUT	OUT	OUT	OUT	"	"	1Y	"	"	"	"	"	"	"
		206	"									"									"	"	2Y	"	"	"	"	"	"	"
		207	"									"									"	"	3Y	"	"	"	"	"	"	"
		208	"									"									"	"	4Y	"	"	"	"	"	"	"
		209	"									"									"	"	5Y	"	"	"	"	"	"	"
		210	"									"									"	"	6Y	"	"	"	"	"	"	"
		211	"									"									"	"	7Y	"	"	"	"	"	"	"
		212	"									"									"	"	8Y	"	"	"	"	"	"	"

See footnotes at end of table.

TABLE III. Group A inspection for device type 61.

Symbol	MIL-STD-883 method	Cases 2 and R	Terminal conditions 1/																				Measured terminal	Test limits						Unit
			1	2	3	4	5	6	7	8	9	10	11	12	13	14	15	16	17	18	19	20		Subgroup 1 T_C = +25°C		Subgroup 2 T_C = +125°C		Subgroup 3 T_C = -55°C		
		Test no.	1G	1A	2A	3A	4A	5A	6A	7A	8A	GND	8Y	7Y	6Y	5Y	4Y	3Y	2Y	1Y	2G	V_{CC}		Min	Max	Min	Max	Min	Max	
V_{IC} (pos)		1	1 mA									OPEN										GND	1G	1/	1.5					V
		2		1 mA								"										"	1A	"	"					"
		3			1 mA							"										"	2A	"	"					"
		4				1 mA						"										"	3A	"	"					"
		5					1 mA					"										"	4A	"	"					"
		6						1 mA				"										"	5A	"	"					"
		7							1 mA			"										"	6A	"	"					"
		8								1 mA		"										"	7A	"	"					"
		9									1 mA	"										"	8A	"	"					"
		10										"									1 mA	"	2G	"	"					"
V_{IC} (pos)		11	-1 mA									GND										OPEN	1G		-1.5					"
		12		-1 mA								"										"	1A		"					"
		13			-1 mA							"										"	2A		"					"
		14				-1 mA						"										"	3A		"					"
		15					-1 mA					"										"	4A		"					"
		16						-1 mA				"										"	5A		"					"
		17							-1 mA			"										"	6A		"					"
		18								-1 mA		"										"	7A		"					"
		19									-1 mA	"										"	8A		"					"
		20										"									-1 mA	"	2G		"					"
I_{CCH}	3005	21	GND	5.5 V	5.5 V	5.5 V	5.5 V	5.5 V	5.5 V	5.5 V	5.5 V	"									GND	5.5 V	V_{CC}		0.2		20			μA
I_{CCL}	3006	22	GND	GND	GND	GND	GND	GND	GND	GND	GND	"									"	"	"		0.2		20			μA
I_{CCA}		23	0.8 V	2.4 V	0.8 V	0.8 V	0.8 V	0.8 V	0.8 V	0.8 V	0.8 V	"									0.8 V	"	"		.490		1.50			mA
		24	2.4 V	0.8 V	0.8 V	0.8 V	0.8 V	0.8 V	0.8 V	0.8 V	0.8 V	"									5.5 V	"	"		.490		1.50			mA
I_{CCZ}		25	5.5 V	GND	GND	GND	GND	5.5 V	5.5 V	5.5 V	5.5 V	"									GND	"	"		0.1		10			μA
		26	GND	5.5 V	5.5 V	5.5 V	5.5 V	GND	GND	GND	GND	"									5.5 V	"	"		0.1		10			μA
V_{OH6}	3006	27	0.8 V	2.0 V								"								-20 μA	0.8 V	4.5 V	1Y	4.4		4.4		4.4		V
		28	"		2.0 V							"							-20 μA		"	"	2Y	"		"		"		"
		29	"			2.0 V						"						-20 μA			"	"	3Y	"		"		"		"
		30	"				2.0 V					"					-20 μA				"	"	4Y	"		"		"		"
		31	"					2.0 V				"				-20 μA					"	"	5Y	"		"		"		"
		32	"						2.0 V			"			-20 μA						"	"	6Y	"		"		"		"
		33	"							2.0 V		"		-20 μA							"	"	7Y	"		"		"		"
		34	"								2.0 V	"	-20 μA								"	"	8Y	"		"		"		"
V_{OH7}	3006	35	"	2.0 V								"								-6.0 mA	"	5.5 V	1Y	3.98		3.7		3.98		"
		36	"		2.0 V							"							-6.0 mA		"	"	2Y	"		"		"		"
		37	"			2.0 V						"						-6.0 mA			"	"	3Y	"		"		"		"
		38	"				2.0 V					"					-6.0 mA				"	"	4Y	"		"		"		"
		39	"					2.0 V				"				-6.0 mA					"	"	5Y	"		"		"		"
		40	"						2.0 V			"			-6.0 mA						"	"	6Y	"		"		"		"
		41	"							2.0 V		"		-6.0 mA							"	"	7Y	"		"		"		"
		42	"								2.0 V	"	-6.0 mA								"	"	8Y	"		"		"		"
V_{OL6}	3007	43	"	0.8 V								"								20 μA	"	4.5 V	1Y		0.1		0.1		0.1	"
		44	"		0.8 V							"							20 μA		"	"	2Y		"		"		"	"
		45	"			0.8 V						"						20 μA			"	"	3Y		"		"		"	"
		46	"				0.8 V					"					20 μA				"	"	4Y		"		"		"	"
		47	"					0.8 V				"				20 μA					"	"	5Y		"		"		"	"
		48	"						0.8 V			"			20 μA						"	"	6Y		"		"		"	"
		49	"							0.8 V		"		20 μA							"	"	7Y		"		"		"	"
		50	"								0.8 V	"	20 μA								"	"	8Y		"		"		"	"

See footnotes at end of table.

TABLE III. Group A inspection for device type 61 - Continued.

Symbol	MIL-STD-883 method	Cases 2 and R	Terminal conditions 1/																				Measured terminal	Test limits						Unit
			1	2	3	4	5	6	7	8	9	10	11	12	13	14	15	16	17	18	19	20		Subgroup 1 T_C = +25°C		Subgroup 2 T_C = +125°C		Subgroup 3 T_C = -55°C		
		Test no.	1$\overline{G}$	1A	2A	3A	4A	5A	6A	7A	8A	GND	8Y	7Y	6Y	5Y	4Y	3Y	2Y	1Y	2$\overline{G}$	V_{CC}		Min	Max	Min	Max	Min	Max	
V_{OL7}	3007	51	0.8 V	2.0 V								GND								6.0 mA	0.8 V	5.5 V	1Y		0.26		0.4		0.26	V
		52	"		2.0 V							"							6.0 mA		"	"	2Y		"		"		"	"
		53	"			2.0 V						"						6.0 mA			"	"	3Y		"		"		"	"
		54	"				2.0 V					"					6.0 mA				"	"	4Y		"		"		"	"
		55	"					2.0 V				"				6.0 mA					"	"	5Y		"		"		"	"
		56	"						2.0 V			"			6.0 mA						"	"	6Y		"		"		"	"
		57	"							2.0 V		"		6.0 mA							"	"	7Y		"		"		"	"
		58	"								2.0 V	"	6.0 mA								"	"	8Y		"		"		"	"
I_{OZH}		59	0.8 V	9/								"								5.5 V	9/	"	1Y		0.2		2.0			μA
		60	"		9/							"							5.5 V		"	"	2Y		"		"			"
		61	"			9/						"						5.5 V			"	"	3Y		"		"			"
		62	"				9/					"					5.5 V				"	"	4Y		"		"			"
		63	"					9/				"				5.5 V					"	"	5Y		"		"			"
		64	"						9/			"			5.5 V						"	"	6Y		"		"			"
		65	"							9/		"		5.5 V							"	"	7Y		"		"			"
		66	"								9/	"	5.5 V								"	"	8Y		"		"			"
I_{OZL}		67	9/	9/								"								GND	0.8 V	"	1Y		-0.2		-2.0			"
		68	"		9/							"							GND		"	"	2Y		"		"			"
		69	"			9/						"						GND			"	"	3Y		"		"			"
		70	"				9/					"					GND				"	"	4Y		"		"			"
		71	"					9/				"				GND					"	"	5Y		"		"			"
		72	"						9/			"			GND						"	"	6Y		"		"			"
		73	"							9/		"		GND							"	"	7Y		"		"			"
		74	"								9/	"	GND								"	"	8Y		"		"			"
I_{IH}	3010	75	5.5 V	GND	GND	GND	GND	GND	GND	GND	GND	"									GND	"	1$\overline{G}$		.05		0.1			"
		76	GND	5.5 V	GND	"	"	"	"	"	"	"									"	"	1A		"		"			"
		77	"	GND	5.5 V	"	"	"	"	"	"	"									"	"	2A		"		"			"
		78	"	"	GND	5.5 V	"	"	"	"	"	"									"	"	3A		"		"			"
		79	"	"	"	GND	5.5 V	"	"	"	"	"									"	"	4A		"		"			"
		80	"	"	"	"	GND	5.5 V	"	"	"	"									"	"	5A		"		"			"
		81	"	"	"	"	"	GND	5.5 V	"	"	"									"	"	6A		"		"			"
		82	"	"	"	"	"	"	GND	5.5 V	"	"									"	"	7A		"		"			"
		83	"	"	"	"	"	"	"	GND	5.5 V	"									"	"	8A		"		"			"
		84	"	"	"	"	"	"	"	GND	GND	"									5.5 V	"	2$\overline{G}$		"		"			"
I_{IL}	3009	85	GND	5.5 V	5.5 V	5.5 V	5.5 V	5.5 V	5.5 V	5.5 V	5.5 V	"									"	"	1$\overline{G}$		-.05		-0.1			"
		86	5.5 V	GND	5.5 V	"	"	"	"	"	"	"									"	"	1A		"		"			"
		87	"	5.5 V	GND	"	"	"	"	"	"	"									"	"	2A		"		"			"
		88	"	"	5.5 V	GND	"	"	"	"	"	"									"	"	3A		"		"			"
		89	"	"	"	5.5 V	GND	"	"	"	"	"									"	"	4A		"		"			"
		90	"	"	"	"	5.5 V	GND	"	"	"	"									"	"	5A		"		"			"
		91	"	"	"	"	"	5.5 V	GND	"	"	"									"	"	6A		"		"			"
		92	"	"	"	"	"	"	5.5 V	GND	"	"									"	"	7A		"		"			"
		93	"	"	"	"	"	"	"	5.5 V	GND	"									"	"	8A		"		"			"
		94	"	"	"	"	"	"	"	5.5 V	5.5 V	"									GND	"	2$\overline{G}$		"		"			"

See footnotes at end of table.

TABLE III. Group A inspection for device type 01 - Continued.

Symbol	MIL-STD-883 method	Cases 2 and R	Terminal conditions 1/																					Measured terminal	Test limits						Unit
			1	2	3	4	5	6	7	8	9	10	11	12	13	14	15	16	17	18	19	20			Subgroup 1 T_C = +25°C		Subgroup 2 T_C = +125°C		Subgroup 3 T_C = -55°C		
		Test no.	1G	1A	2A	3A	4A	5A	6A	7A	8A	GND	8Y	7Y	6Y	5Y	4Y	3Y	2Y	1Y	2G	V_{CC}			Min	Max	Min	Max	Min	Max	
I_{OS4}	3011	95	GND	4 V								GND								GND	GND	4 V	1Y		-10	-135	-10	-135	-10	-135	mA
		96	"		4 V							"						GND	GND		"	"	2Y		"	"	"	"	"	"	"
		97	"			4 V						"					GND				"	"	3Y		"	"	"	"	"	"	"
		98	"				4 V					"				GND					"	"	4Y		"	"	"	"	"	"	"
		99	"					4 V				"			GND						"	"	5Y		"	"	"	"	"	"	"
		100	"						4 V			"		GND							"	"	6Y		"	"	"	"	"	"	"
		101	"							4 V		"									"	"	7Y		"	"	"	"	"	"	"
		102	"								4 V	"	GND								"	"	8Y		"	"	"	"	"	"	"
																									Subgroup 4 T_C = +25°C						
																									Min	Max					
C_I	3012	103	2/									GND										GND	1G			10					pF
		104		2/								"										"	1A			"					"
		105			2/							"										"	2A			"					"
		106				2/						"										"	3A			"					"
		107					2/					"										"	4A			"					"
		108						2/				"										"	5A			"					"
		109							2/			"										"	6A			"					"
		110								2/		"										"	7A			"					"
		111									2/	"										"	8A			"					"
		112										"									2/	"	2G			"					"
C_O		113	GND									"										5.5 V	Y's			20					"
		114	5.5 V									"	2/	2/	2/	2/	2/	2/	2/	2/		GND	Y's			20					"
																									Subgroup 7 T_C = +25°C		Subgroup 8 T_C = +125°C		Subgroup 8 T_C = -55°C		
																									Min	Max	Min	Max	Min	Max	
Truth table	d/	115	B	A	A	A	A	A	A	A	A	GND	H	H	H	H	H	H	H	H	B	4.5 V	7/								
		116	B	B	B	B	B	B	B	B	B	GND	L	L	L	L	L	L	L	L	a	4.5 V	7/								
																									Subgroup 9 T_C = +25°C		Subgroup 10 T_C = +125°C		Subgroup 11 T_C = -55°C		
																									Min	Max	Min	Max	Min	Max	
t_{PHL}	3003 (Fig. 4)	117	GND	IN								GND											1A to 1Y		10	26	13	35	13	26	ns
		118	"		IN							"											2A to 2Y		"	"	"	"	"	"	"
		119	"			IN						"											3A to 3Y		"	"	"	"	"	"	"
		120	"				IN					"											4A to 4Y		"	"	"	"	"	"	"
		121	"					IN				"											5A to 5Y		"	"	"	"	"	"	"
		122	"						IN			"											6A to 6Y		"	"	"	"	"	"	"
		123	"							IN		"											7A to 7Y		"	"	"	"	"	"	"
		124	"								IN	"	OUT	OUT	OUT	OUT	OUT	OUT	OUT	OUT			8A to 8Y		"	"	"	"	"	"	"
t_{PLH}	3003 (Fig. 4)	125	"	IN								"											1A to 1Y		"	"	"	"	"	"	"
		126	"		IN							"											2A to 2Y		"	"	"	"	"	"	"
		127	"			IN						"											3A to 3Y		"	"	"	"	"	"	"
		128	"				IN					"											4A to 4Y		"	"	"	"	"	"	"
		129	"					IN				"											5A to 5Y		"	"	"	"	"	"	"
		130	"						IN			"											6A to 6Y		"	"	"	"	"	"	"
		131	"							IN		"											7A to 7Y		"	"	"	"	"	"	"
		132	"								IN	"	OUT	OUT	OUT	OUT	OUT	OUT	OUT	OUT			8A to 8Y		"	"	"	"	"	"	"
t_{PZH}	3003 (Fig. 4)	133	IN	GND								"											1G to 1Y		"	40	"	50	"	40	"
		134	"		GND							"											2G to 2Y		"	"	"	"	"	"	"
		135	"			GND						"											3G to 3Y		"	"	"	"	"	"	"
		136	"				GND					"											4G to 4Y		"	"	"	"	"	"	"
		137	"					GND				"											5G to 5Y		"	"	"	"	"	"	"
		138	"						GND			"											6G to 6Y		"	"	"	"	"	"	"
		139	"							GND		"											7G to 7Y		"	"	"	"	"	"	"
		140	"								GND	"	OUT	OUT	OUT	OUT	OUT	OUT	OUT	OUT			8G to 8Y		"	"	"	"	"	"	"

See footnotes at end of table.

TABLE III. Group A inspection for device type 61 - Continued.

Symbol	MIL-STD-883 method	Cases 2 and R	Terminal conditions 1/																				Measured terminal	Test limits						Unit
			1	2	3	4	5	6	7	8	9	10	11	12	13	14	15	16	17	18	19	20		Subgroup 9 T_C = +25°C		Subgroup 10 T_C = +125°C		Subgroup 11 T_C = -55°C		
		Test no.	1G	1A	2A	3A	4A	5A	6A	7A	8A	GND	8Y	7Y	6Y	5Y	4Y	3Y	2Y	1Y	2G	V_{CC}		Min	Max	Min	Max	Min	Max	
t_{PZH}	3003 (Fig. 4)	141	GND	GND								GND								OUT	IN	4.5 V	2G to 1Y	10	40	10	53	10	40	ns
		142	"		GND							"							OUT		"	"	2G to 2Y	"	"	"	"	"	"	"
		143	"			GND						"						OUT			"	"	2G to 3Y	"	"	"	"	"	"	"
		144	"				GND					"					OUT				"	"	2G to 4Y	"	"	"	"	"	"	"
		145	"					GND				"				OUT					"	"	2G to 5Y	"	"	"	"	"	"	"
		146	"						GND			"			OUT						"	"	2G to 6Y	"	"	"	"	"	"	"
		147	"							GND		"		OUT							"	"	2G to 7Y	"	"	"	"	"	"	"
		148	"								GND	"	OUT								"	"	2G to 8Y	"	"	"	"	"	"	"
t_{PZL}	3003 (Fig. 4)	149	IN	4.5 V								"								OUT	GND	"	1G to 1Y	"	"	"	"	"	"	"
		150	"		4.5 V							"							OUT		"	"	1G to 2Y	"	"	"	"	"	"	"
		151	"			4.5 V						"						OUT			"	"	1G to 3Y	"	"	"	"	"	"	"
		152	"				4.5 V					"					OUT				"	"	1G to 4Y	"	"	"	"	"	"	"
		153	"					4.5 V				"				OUT					"	"	1G to 5Y	"	"	"	"	"	"	"
		154	"						4.5 V			"			OUT						"	"	1G to 6Y	"	"	"	"	"	"	"
		155	"							4.5 V		"		OUT							"	"	1G to 7Y	"	"	"	"	"	"	"
		156	"								4.5 V	"	OUT								"	"	1G to 8Y	"	"	"	"	"	"	"
		157	GND	4.5 V								"								OUT	IN	"	2G to 1Y	"	"	"	"	"	"	"
		158	"		4.5 V							"							OUT		"	"	2G to 2Y	"	"	"	"	"	"	"
		159	"			4.5 V						"						OUT			"	"	2G to 3Y	"	"	"	"	"	"	"
		160	"				4.5 V					"					OUT				"	"	2G to 4Y	"	"	"	"	"	"	"
		161	"					4.5 V				"				OUT					"	"	2G to 5Y	"	"	"	"	"	"	"
		162	"						4.5 V			"			OUT						"	"	2G to 6Y	"	"	"	"	"	"	"
		163	"							4.5 V		"		OUT							"	"	2G to 7Y	"	"	"	"	"	"	"
		164	"								4.5 V	"	OUT								"	"	2G to 8Y	"	"	"	"	"	"	"
t_{PLZ}	3003 (Fig. 4)	165	IN	4.5 V								"								OUT	GND	"	1G to 1Y	"	31	"	41	"	31	"
		166	"		4.5 V							"							OUT		"	"	1G to 2Y	"	"	"	"	"	"	"
		167	"			4.5 V						"						OUT			"	"	1G to 3Y	"	"	"	"	"	"	"
		168	"				4.5 V					"					OUT				"	"	1G to 4Y	"	"	"	"	"	"	"
		169	"					4.5 V				"				OUT					"	"	1G to 5Y	"	"	"	"	"	"	"
		170	"						4.5 V			"			OUT						"	"	1G to 6Y	"	"	"	"	"	"	"
		171	"							4.5 V		"		OUT							"	"	1G to 7Y	"	"	"	"	"	"	"
		172	"								4.5 V	"	OUT								"	"	1G to 8Y	"	"	"	"	"	"	"
		173	GND	4.5 V								"								OUT	IN	"	2G to 1Y	"	"	"	"	"	"	"
		174	"		4.5 V							"							OUT		"	"	2G to 2Y	"	"	"	"	"	"	"
		175	"			4.5 V						"						OUT			"	"	2G to 3Y	"	"	"	"	"	"	"
		176	"				4.5 V					"					OUT				"	"	2G to 4Y	"	"	"	"	"	"	"
		177	"					4.5 V				"				OUT					"	"	2G to 5Y	"	"	"	"	"	"	"
		178	"						4.5 V			"			OUT						"	"	2G to 6Y	"	"	"	"	"	"	"
		179	"							4.5 V		"		OUT							"	"	2G to 7Y	"	"	"	"	"	"	"
		180	"								4.5 V	"	OUT								"	"	2G to 8Y	"	"	"	"	"	"	"
t_{PHZ}	3003 (Fig. 4)	181	IN	GND								"								OUT	GND	"	1G to 1Y	"	"	"	"	"	"	"
		182	"		GND							"							OUT		"	"	1G to 2Y	"	"	"	"	"	"	"
		183	"			GND						"						OUT			"	"	1G to 3Y	"	"	"	"	"	"	"
		184	"				GND					"					OUT				"	"	1G to 4Y	"	"	"	"	"	"	"
		185	"					GND				"				OUT					"	"	1G to 5Y	"	"	"	"	"	"	"
		186	"						GND			"			OUT						"	"	1G to 6Y	"	"	"	"	"	"	"
		187	"							GND		"		OUT							"	"	1G to 7Y	"	"	"	"	"	"	"
		188	"								GND	"	OUT								"	"	1G to 8Y	"	"	"	"	"	"	"

See footnotes at end of table.

TABLE III. Group A inspection for device type 61 - Continued.

Symbol	MIL-STD-883 method	Cases 2 and R	Terminal conditions 1/																				Measured terminal	Test limits						Unit
			1	2	3	4	5	6	7	8	9	10	11	12	13	14	15	16	17	18	19	20		Subgroup 9 T_C = +25°C		Subgroup 10 T_C = +125°C		Subgroup 11 T_C = -55°C		
		Test no.	$1\bar{G}$	1A	2A	3A	4A	5A	6A	7A	8A	GND	8Y	7Y	6Y	5Y	4Y	3Y	2Y	1Y	$2\bar{G}$	V_{CC}		Min	Max	Min	Max	Min	Max	
t_{PHZ}	3003 (Fig. 4)	189	GND	GND								GND								OUT	IN	4.5 V	$2\bar{G}$ to 1Y	10	31	10	41	10	31	ns
		190	"		GND							"							OUT		"	"	$2\bar{G}$ to 2Y	"	"	"	"	"	"	"
		191	"			GND						"						OUT			"	"	$2\bar{G}$ to 3Y	"	"	"	"	"	"	"
		192	"				GND					"					OUT				"	"	$2\bar{G}$ to 4Y	"	"	"	"	"	"	"
		193	"					GND				"				OUT					"	"	$2\bar{G}$ to 5Y	"	"	"	"	"	"	"
		194	"						GND			"			OUT						"	"	$2\bar{G}$ to 6Y	"	"	"	"	"	"	"
		195	"							GND		"		OUT							"	"	$2\bar{G}$ to 7Y	"	"	"	"	"	"	"
		196	"								GND	"	OUT								"	"	$2\bar{G}$ to 8Y	"	"	"	"	"	"	"
t_{TLH}	3004 (Fig. 4)	197	GND	IN								"								OUT	GND	"	1Y	2	12	2	16	2	12	"
		198	"		IN							"							OUT		"	"	2Y	"	"	"	"	"	"	"
		199	"			IN						"						OUT			"	"	3Y	"	"	"	"	"	"	"
		200	"				IN					"					OUT				"	"	4Y	"	"	"	"	"	"	"
		201	"					IN				"				OUT					"	"	5Y	"	"	"	"	"	"	"
		202	"						IN			"			OUT						"	"	6Y	"	"	"	"	"	"	"
		203	"							IN		"		OUT							"	"	7Y	"	"	"	"	"	"	"
		204	"								IN	"	OUT								"	"	8Y	"	"	"	"	"	"	"
t_{THL}	3004 (Fig. 4)	205	GND	IN								"								OUT	"	"	1Y	"	"	"	"	"	"	"
		206	"		IN							"							OUT		"	"	2Y	"	"	"	"	"	"	"
		207	"			IN						"						OUT			"	"	3Y	"	"	"	"	"	"	"
		208	"				IN					"					OUT				"	"	4Y	"	"	"	"	"	"	"
		209	"					IN				"				OUT					"	"	5Y	"	"	"	"	"	"	"
		210	"						IN			"			OUT						"	"	6Y	"	"	"	"	"	"	"
		211	"							IN		"		OUT							"	"	7Y	"	"	"	"	"	"	"
		212	"								IN	"	OUT								"	"	8Y	"	"	"	"	"	"	"

See footnotes at end of table.

NOTES:

1/ Output pins not designated may be "high" level logic, "low" level logic, or open. Input pins not designated may be "high" level logic, or "low" level logic. Exceptions are as follows:

a. V_{IC} (pos) tests: The GND terminal shall be open. A minimum limit of 0.4 V applies to tests being performed on equipment not capable of opening "GND" pin during test.

b. V_{IC} (neg) tests: The V_{CC} terminal shall be open.

c. I_{CC} tests: The output terminal shall be open.

2/ See 4.4.1c.

3/ Decrement input in 50 mV steps beginning 100 mV above the maximum limit specified until the output changes from GND to V_{DD}. The input voltage where this transition occurs is V_{T-}.

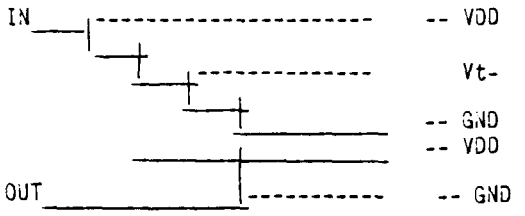

4/ Increment input in 50 mV steps beginning 100 mV below the minimum limit specified until the output changes from V_{DD} to GND. The input voltage where this transition occurs is V_{T+}.

5/ $V_H = (V_{T+}) - (V_{T-})$ See table III for V_H limits.

6/ A = 3.7 V
B = 0.4 V

7/ Output shall be: High $\geq$ 1.5 V; Low $\leq$ 1.5 V; I_{OUT} = 20 µA.

8/ A = 2.4 V
B = 0.4 V

9/ Three-state output conditions are required. For I_{OZL}, set output to high state. For I_{OZH}, set output to low state. Set input pins to $V_{IL} = V_{IL(max)}$ and $V_{IH} = V_{IH(min)}$, as required.

(1) Table I pin combinations 4 and 5 shall be deleted.

(2) The test sequence specified in paragraph 3.b shall be repeated an additional four times rather than the two specified.

(3) Category A limits specified in paragraph 3.b of method 3015 shall be: 1,000 V $\leq$ A $\leq$ 2,000 V.

(4) Only those device types that pass ESDS testing at 1,000 volts or greater shall be considered as conforming to the requirements of this specification.

c. End-point electrical parameters shall be as specified in table II herein. Delta limits shall apply only to subgroup 5 of group B inspections and shall consist of tests specified in table IV herein.

4.4.3 Group C inspection. Group C inspection shall be in accordance with table III of method 5005 of MIL-STD-883 and as follows:

a. End-point electrical parameters shall be as specified in table II herein. Delta limits shall apply only to subgroup I of group C inspection and shall consist of tests specified in table IV herein.

b. Steady-state life test (method 1005 of MIL-STD-883) conditions:

(1) Test condition D and as specified in 4.5.2 herein and as shown on figure 3 (dynamic), or equivalent.

(2) T_A = +125°C minimum.

(3) Test duration, 1,000 hours, except as permitted by appendix 3 of MIL-M-38510 and method 1005 of MIL-STD-883.

4.4.4 Group D inspection. Group D inspection shall be in accordance with table IV of method 5005 of MIL-STD-883. End-point electrical parameters shall be as specified in table II herein.

4.4.5 Group E inspection. Group E inspection is required only for device types intended to be marked as radiation hardened (see 3.6.1). When group E testing is performed it shall be in accordance with table V of method 5005 of MIL-STD-883 and 4.5.4 herein.

4.5 Methods of inspection. Methods of inspection shall be specified as follows:

4.5.1 Voltage and current. Unless otherwise specified, all voltages given are referenced to the microcircuit GND terminal. Currents given are conventional current and positive when flowing into the referenced terminal.

4.5.2 Burn-in and life test cool down procedures. When the burn-in and life tests are completed and prior to removal of bias voltages, the devices under test (DUT) shall be cooled to within 10°C of their power stable conditions at room temperature; then, electrical parameter end-point measurements shall be performed.

TABLE IV. Delta limits at 25°C.

Parameter 1/	Device types	
	All	
I_{CC}		±30 nA

1/ The above parameters shall be recorded before and after the required burn-in and life tests to determine deltas (Δ).

4.5.3 Quiescent supply current (I_{CC} test). When performing quiescent supply current measurements (I_{CC}), the meter shall be placed so that all currents flow through the meter.

4.5.4 Radiation hardness assurance (RHA) testing. The RHA testing shall be performed in accordance with test procedures and sampling specified in table V of method 5005 of MIL-STD-883 and herein:

a. Before irradiation, selected samples shall be assembled in qualified packages and pass the governing electrical parameters (group A subgroup 1 at 25°C) and also be subjected to the threshold-voltage test in table V in order to calculate the delta threshold (ΔV_T) after irradiation.

b. The devices shall be subjected to a total radiation dose as specified in MIL-M-38510 for the radiation hardness assurance (RHA) level being tested, and meet the end point electrical parameters as defined in table VI at 25°C, after exposure. The start and completion of the end point electrical parameter measurements shall not exceed 2 hours following irradiation.

c. Threshold-voltage test circuit conditions shall be as specified in table V. In situ and remote testing, the tests shall be performed with the devices biased in accordance with table VII and bias may be interrupted for up to 1 minute to remove devices to the remote bias fixture.

d. After irradiation, the devices shall pass the truth table test as specified in subgroup 7 in table III or if subgroup 7 is not required, then an equivalent truth table test shall be performed.

TABLE V. Threshold-voltage test circuit conditions.

Device type	GND	5 V	V_{TN} measured at -10 µA supply	GND	-5.0 V	V_{TP} measured at 10 µA supply
01,02,51,52	1	14	3,5,7,9,11,13	1	3,5,7,9,11,13	14
03,53	2	19,20	1,4,6,8,10,11,15,17	2	1,4,6,8,10,11 13,15,17,19	20
04,54	1	2,19,20	4,6,8,10,11,13,15,17	1	2,4,6,8,10,11 13,15,17,19	20
05,55	19	1,2,20	4,6,8,10,11,13,15,17	2	1,4,6,8,10,11 13,15,17,19	20
06	1	2,15,16	4,6,8,10,12,14	1	2,4,6,8,10,12 14,15	16
07	15	1,2,16	4,6,8,10,12,14	2	1,4,6,8,10,12 14,15	16
08	15	1,2,16	4,6,8,10,12,14	2	1,4,6,8,10,12 14,15	16
09	2	15,16	1,4,6,8,10,12,14	2	1,4,6,8,10,12 14,15	16
10,60	1	2,19,20	3,4,5,6,7,8,9,10	1	2,3,4,5,6,7, 8,9,10,19	20
11,61	19	1,2,20	3,4,5,6,7,8,9,10	2	1,3,4,5,6,7, 8,9,10,19	20

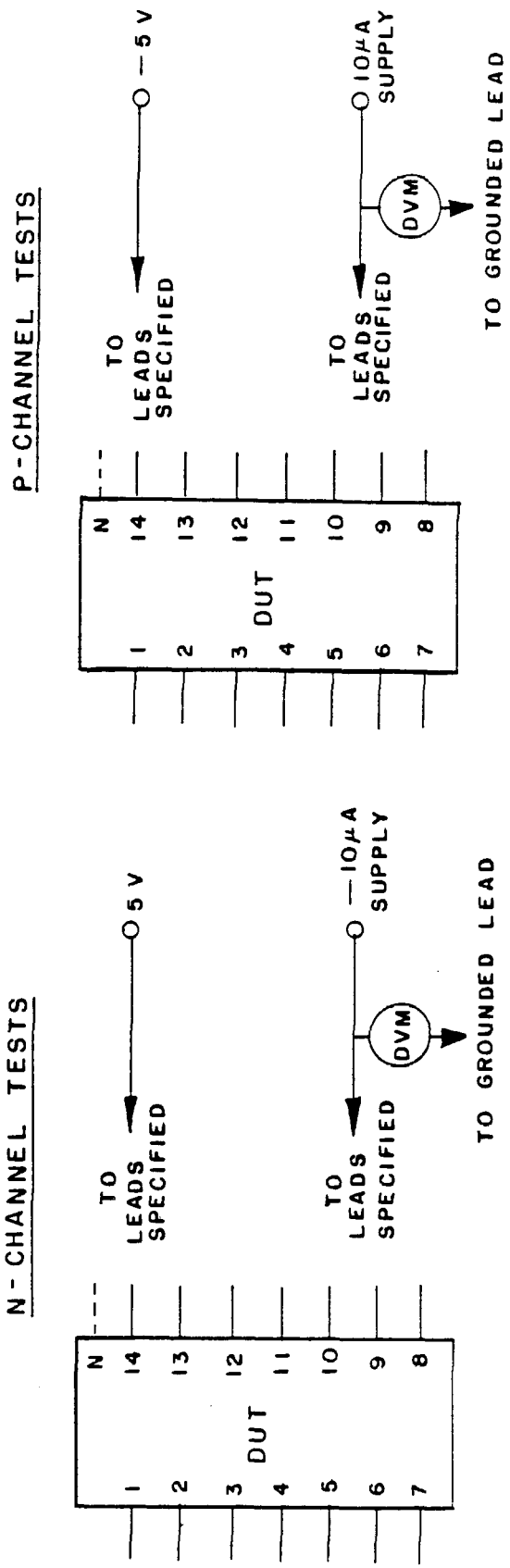

FIGURE 5. Threshold - voltage test circuit.

TABLE VI. Radiation hardening end-point electrical parameters at +25°C.

Parameter	All device types	V_{CC} Device types 01-11	V_{CC} Device types 51-55 60,61
V_{TN}	-0.3 V min	5 V	5 V
V_{TP}	2.8 V max	5 V	5 V
ΔV_T	1.0 V max	5 V	5 V
I_{CC}	100 x max limit	6 V	5.5 V
t_{PLH}	1.35 x max limit	4.5 V	4.5 V
t_{PHL}	1.35 x max limit	4.5 V	4.5 V

TABLE VII. Bias during exposure to radiation.

Device type	Pin connections: V_{CC} = 4.5 V dc (through a 30 - to 60-kilohm resistor)	Pin connections: GND	V_{CC} = 4.5 V dc
01, 51	1, 3, 5, 9, 11, 13	7	14
02, 52	1, 3, 5, 9, 11, 13	7	14
03, 53	1, 2, 4, 6, 8, 11, 13, 15, 17, 19	10	20
04, 54	1, 2, 4, 6, 8, 11, 13, 15, 17, 19	10	20
05, 55	1, 2, 4, 6, 8, 11, 13, 15, 17, 19	10	20
06	1, 2, 4, 6, 8, 10, 12, 14, 15	8	16
07	1, 2, 4, 6, 8, 10, 12, 14, 15	8	16
08	1, 2, 4, 6, 8, 10, 12, 14, 15	8	16
09	1, 2, 4, 6, 8, 10, 12, 14, 15	8	16
10, 60	1, 2, 3, 4, 5, 6, 7, 8, 9, 19	10	20
11, 61	1, 2, 3, 4, 5, 6, 7, 8, 9, 19	10	20

Pins not designated are open or connected to 4.5 V dc through a 30- to 60- kilohms resistors.

4.6 Data reporting. When specified in the purchase order or contract, a copy of the following data, as applicable, shall be supplied.

a. Attributes data for all screening tests (see 4.2) and variables data for all static burn-in, dynamic burn-in, and steady-state life tests (see 3.5).

b. A copy of each radiograph.

c. The quality conformance inspection data (see 4.4).

d. Parameter distribution data on parameters evaluated during burn-in (see 3.5).

e. Final electrical parameters data (see 4.2c).

5. PACKAGING

5.1 Packaging requirements. The requirements for packaging shall be in accordance with MIL-M-38510.

6. NOTES

6.1 Intended use. Microcircuits conforming to this specification are intended for original equipment design application and logisitic support of existing equipment.

6.2 Ordering data. The acquisition document should specify the following:

a. Complete part number (see 1.2).

b. Requirements for delivery of one copy of the quality conformance inspection data pertinent to the device inspection lot to be supplied with each shipment by the device manufacturer, if applicable.

c. Requirements for certificate of compliance, if applicable.

d. Requirements for notification of change of product or process to the contracting activity in addition to notification to the qualifying activity, if applicable.

e. Requirements for failure analysis (including required test condition of method 5003 of MIL-STD-883), corrective action and reporting of results, if applicable.

f. Requirements for product assurance options.

g. Requirements for special carriers, lead lengths, or lead forming, if applicable. These requirements shall not affect the part number. Unless otherwise specified, these requirements shall not apply to direct purchase by, or direct shipment to the Government.

h. Requirements for "JAN" marking.

i. Requirements for total dose radiation testing (see 3.6.1 and 4.5.4), if applicable.

6.3 Abbreviations, symbols, and definitions. The abbreviations, symbols, and definitions used herein are defined in MIL-M-38510, MIL-STD-1331, and as follows:

C_i - - - - - - - - - - - - - -	Input terminal-to-GND capacitance.
I_{CC} - - - - - - - - - - - - - -	Quiescent supply current.
V_{CC} - - - - - - - - - - - - - -	Positive supply voltage.
V_{IN} - - - - - - - - - - - - - -	Voltage level at an input terminal.
I_{IN} - - - - - - - - - - - - - -	Current flowing into an input terminal.
t_{PHZ} - - - - - - - - - - - - - -	Output disable time from high level. The time between the specified reference points on the input and output voltage waveforms with the three-state output changing from the defined high level to a high-impedance (off) state.
t_{PLZ} - - - - - - - - - - - - - -	Output disable time from low level. The time between the specified reference points on the input and output voltage waveforms with the three-state output changing from the defined low level to a high-impedance (off) state.

tPZH- - - - - - - - - - - - - -	Output enable time to high level. The time between the specified reference points on the input and output voltage waveforms with the three-state output changing from a high impedance (off) state to the defined high level.
tPZL- - - - - - - - - - - - - -	Output enable time to low level. The time between the specified reference points on the input and output voltage waveforms with the three-state output changing from a high-impedance (off) state to the defined low level.
IOZL- - - - - - - - - - - - - -	Output current in the high-impedance mode with the output voltage low.
IOZH- - - - - - - - - - - - - -	Output current in the high-impedance mode with the output voltage high.
CPD - - - - - - - - - - - - - -	Power dissipation capacitance.
ICCΔ- - - - - - - - - - - - - -	Additional supply current when using worst case TTL input levels.

6.4 Logistic support. Lead materials and finishes (see 3.3) are interchangeable. Unless otherwise specified, microcircuits acquired for Government logistic support will be acquired to device class S for National Aeronautics and Space Administration or class B for Department of Defense (see 1.2.2), lead finish C (see 3.3). Longer length leads and lead forming shall not affect the part number.

6.5 Substitutability. The cross-reference information below is presented for the convenience of users. Microcircuits covered by this specification will functionally replace the listed generic-industry type. Generic-industry microcircuit types may not have equivalent operational performance characteristics across military temperature ranges or reliability factors equivalent to MIL-M-38510 device types and may have slight physical variations in relation to case size. The presence of this information shall not be deemed as permitting substitution of generic-industry types for MIL-M-38510 types or as a waiver of any of the provisions of MIL-M-38510.

Military device type	Generic-industry type
01/51	54HC04/54HCT04
02/52	54HC14/54HCT14
03/53	54HC240/54HCT240
04/54	54HC241/54HCT241
05/55	54HC244/54HCT244
06	54HC365
07	54HC366
08	54HC367
09	54HC368
10/60	54HC540/54HCT540
11/61	54HC541/54HCT541

6.6 Handling. MOS devices must be handled with certain precautions to avoid damage due to accumulation of static charge. Input protective devices have been designed in the chip to minimize the effect of this static build up. However, the following handling practices are recommended:

a. Devices should be handled on benches with conductive and grounded surface.

b. Ground test equipment and tools.

c. Do not handle devices by the leads.

d. Store devices in conductive foam or carriers.

e. Avoid use of plastic, rubber, or silk in MOS areas.

f. Maintain relative humidity above 50 percent, if practical.

Custodians:
Army - ER
Navy - EC
Air Force - 17
NASA - NA

Review activities:
Army - AR, MI
Air Force - 11, 19, 85, 99
DLA - ES

User activities:
Army - SM
Navy - AS, CG, OC, MCG, SH

Preparing activity:
Air Force - 17

Agent:
DLA - ES

(Project 5962-0848)