MILITARY SPECIFICATION

MICROCIRCUITS, DIGITAL, TTL,
BINARY FULL ADDERS, MONOLITHIC SILICON

This amendment forms a part of Military Specification MIL-M-38510/6C, dated 24 June 1976, and is approved for use by all Departments and Agencies of the Department of Defense.

PAGE 1

1.3, Maximum power dissipation 1/, delete and substitute:

"P_D = 275 mWdc for type 01
P_D = 550 mWdc for type 02
P_D = 303 mWdc for type 03
P_D = 171 mWdc for type 04"

PAGE 3

TABLE I, I_{IH2} test, Device type, Limits, and Unit columns, delete and substitute:

"

Device type	Limits Min	Limits Max	Unit
01, 02,	---	400	μA
03	---	160	μA

"

PAGE 6

4.1, line 2: Delete "Method 5005" and insert "methods 5005 and 5007, as applicable,".

PAGE 7

4.3(b): Delete in its entirety.

4.3(d), first sentence: Delete "is specified as 5 percent" and substitute "shall be as specified in MIL-M-38510".

4.4, line 2, add: "Inspections to be performed shall be those specified in method 5005 of MIL-STD-883 and herein for groups A, B, C, and D inspections (see 4.4.1, 4.4.2, and 4.4.3)."

PAGE 25

* FIGURE 4, Device type 02, Circuit G, delete and substitute new Circuit G as printed on page 3 of this amendment.

PAGE 40

FIGURE 9:
Column 3, title: Delete "Y" and substitute "$\overline{Y}$".
Column 2, Test numbers 65, 77: Delete "$C_n + 1$" and substitute "$\overline{C_n + 1}$".
Test numbers 68, 80 and 69, 81:
Column 3, delete "A_c" and substitute "NONE".
Column 4, delete "NONE" and substitute "A_c".

FSC 5962

PAGE 43

TABLE III, device type 02, Test numbers 29-37, columns A1 and B1: Add "6/".

PAGE 44

* TABLE III, Test numbers 38 through 42, Symbol column: Add "7/" to I_{IL1}.

PAGE 45

TABLE III, device type 02, Test number 72, column C4: Add an arrowhead.

PAGE 46

* TABLE III, add footnote 7/ as follows:

"7/ For circuit G, the I_{IL1} limits are -0.7 mA minimum and -1.6 mA maximum."

PAGE 47

TABLE III, device type 03: Delete and substitute new table as printed on page 4 of this amendment.

PAGE 50

TABLE III, device type 04, Test numbers 18 thru 23, Max limits and Unit columns: Delete "1 mA" and substitute "100 μA", respectively.

TABLE III, device type 04, Test number 24, Max limits and Unit columns: Delete "1 mA" and substitute "500 μA", respectively.

PAGE 51

TABLE III, device type 04, Test numbers 51, 52, 59, and 60, column AC: Delete "B" and substitute "A".

PAGE 52

6.3, Ordering data:, add: "(i) Requirement for JAN marking."

NOTE: The margins of this amendment are marked with an asterisk to indicate where changes (additions, modifications, corrections, deletions) from the previous amendment were made. This was done as a convenience only and the Government assumes no liability whatsoever for any inaccuracies in these notations. Bidders and contractors are cautioned to evaluate the requirements of this document based on the entire content irrespective of the marginal notations and relationship to the last previous amendment.

Custodians:
Army - ER
Navy - EC
Air Force - 17

Review activities:
Army - AR, MI
Air Force - 11, 19, 99
DLA - ES

User activities:
Army - SM
Navy - CG, MC, AS, OS, SH

Agent:
DLA - ES

Preparing activity:
Air Force - 17

(Project 5962-0444)

Device type 02

Circuit G

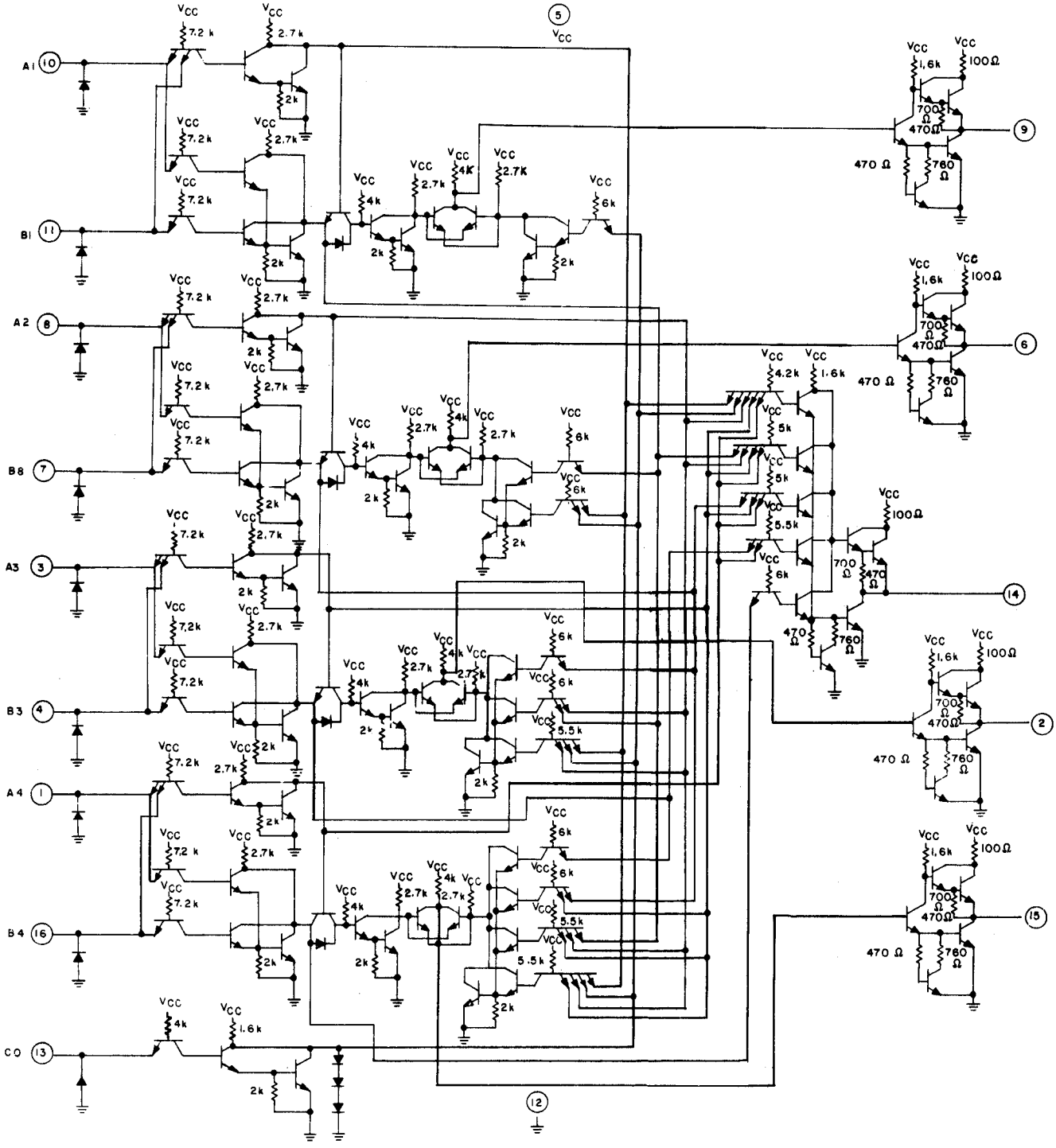

FIGURE 4. Schematic circuit.

TABLE III. Group A inspection for device type 03.
Terminal conditions (pins not designated may be H $\geq$ 2.0 V; L $\leq$ 0.8 V; or open)

Subgroup	Symbol	MIL-STD-883 method	Case E, F Test No.	1 $\bar{A}2$	2 A1	3 B1	4 C1	5 $\bar{C}01$	6 $\bar{\Sigma}1$	7 $\Sigma1$	8 GND	9 $\bar{\Sigma}2$	10 $\Sigma2$	11 C02	12 $\bar{C}2$	13 B2	14 A2	15 $\bar{B}2$	16 V_{CC}	Meas. terminal	Test limits Min	Max	Unit
1 T_A = 25°C	V_{OH}	3006	1		2.0 v	0.8 v	0.8 v	-560 μA			GND								4.5 v	$\bar{C}01$	2.4		V
			2		0.8 v	0.8 v	0.8 v		-800 μA											$\bar{\Sigma}1$			
			3		2.0 v	2.0 v	2.0 v			-800 μA										$\Sigma1$			
			4	0.8 v										-560 μA	2.0 v	0.8 v	0.8 v	0.8 v		C02			
			5	2.0 v									-800 μA		0.8 v	2.0 v	2.0 v	2.0 v		$\Sigma2$			
			6	2.0 v								-8.00 μA			2.0 v	0.8 v	0.8 v	2.0 v		$\bar{\Sigma}2$			
	V_{OL}	3007	7		0.8 v	2.0 v	2.0 v	8 mA												$\bar{C}01$	---	0.4	
			8		2.0 v	0.8 v	0.8 v		16 mA											$\bar{\Sigma}1$			
			9		0.8 v	0.8 v	0.8 v			16 mA										$\Sigma1$			
			10	2.0 v										8 mA	2.0 v	2.0 v	0.8 v	0.8 v		C02			
			11	2.0 v									16 mA		0.8 v	0.8 v	2.0 v	2.0 v		$\Sigma2$			
			12	0.8 v								16 mA			0.8 v	0.8 v	0.8 v	0.8 v		$\bar{\Sigma}2$			
	I_{IL1}	3009	13													0.4 v			5.5 v	B2	-0.4	-1.3	mA
	I_{IL1}		14														0.4 v			A2	-0.4	-1.3	
	I_{IL2}		15 CKT J		0.4 v	4.5 v	4.5 v													A1	-1.2	-5.6	
			15 CKT K		0.4 v	4.5 v	4.5 v													A1		-3.9	
			16 CKT J		4.5 v	0.4 v	4.5 v													B1		-5.6	
			16 CKT K		4.5 v	0.4 v	4.5 v													B1		-3.9	
			17 CKT J		4.5 v	4.5 v	0.4 v													C1		-5.6	
			17 CKT K		4.5 v	4.5 v	0.4 v													C1		-3.9	
	I_{IL3}		18 CKT J	0.4 v											4.5 v	GND	GND	4.5 v		$\bar{A}2$	-2.4	-5.6	
			18 CKT K	0.4 v											4.5 v			4.5 v		$\bar{A}2$	-1.2		
			19 CKT J	4.5 v											0.4 v			4.5 v		$\bar{C}2$	-2.4		
			19 CKT K	4.5 v											0.4 v			4.5 v		$\bar{C}2$	-1.2		
			20 CKT J	4.5 v											4.5 v			0.4 v		$\bar{B}2$	-2.4		
			20 CKT K	4.5 v											4.5 v			0.4 v		$\bar{B}2$	-1.2		
	I_{IH1}	3010	21	GND	GND	GND	GND								GND	2.4 v	GND			B2	---	40	μA
	I_{IH1}		22													GND	2.4 v			A2		40	μA
	I_{IH2}		22A													5.5 v	GND			B2		100	μA
	I_{IH2}		22B													GND	5.5 v			A2		100	μA
	I_{IH3}		23	2.4 v													GND	GND		$\bar{A}2$		160	μA
			24	GND	2.4 v															A1			
			25		GND	2.4 v														B1			
			26			GND	2.4 v													C1			
			27				GND								2.4 v					$\bar{C}2$			
			28												GND			2.4 v		$\bar{B}2$			
	I_{IH4}		29	5.5 v														GND		$\bar{A}2$		400	μA
			30	GND	5.5 v															A1			
			31		GND	5.5 v														B1			
			32			GND	5.5 v													C1			
			33				GND								5.5 v					$\bar{C}2$			
			34												GND			5.5 v		$\bar{B}2$			
	I_{OS}	3011	35					GND												$\bar{C}01$	-30	-100	mA
			36						GND											$\bar{\Sigma}1$			
			37		4.5 v					GND										$\Sigma1$			
			38		GND									GND	GND	GND	GND	GND		$\bar{C}2$			
			39										GND					GND		$\Sigma2$			
			40									GND						4.5 v		$\bar{\Sigma}2$			

See footnotes at end of device type 03.