Qualification requirements have been removed for device type 10 (see 1.1).

MIL-M-38510/703
22 November 1985
SUPERSEDING
MIL-M-38510/70A
3 December 1982

MILITARY SPECIFICATION

MICROCIRCUITS, DIGITAL, BIPOLAR, SCHOTTKY TTL, NAND GATES,
MONOLITHIC SILICON

This specification is approved for use by all Departments and Agencies of the Department of Defense.

1. SCOPE

1.1 Scope. This specification covers the detail requirements for monolithic silicon, Schottky TTL, positive NAND logic gate microcircuits. Qualification requirements are removed for device type 10. This device type is inactive for new design after the date of this revision. For the remaining device types (01, 02, 03, 04, 05, 06, 07, 08, and 09), two product assurance class and a choice of case outlines and lead finishes are provided for each type and are reflected in the complete part number.

1.2 Part number. The part number shall be in accordance with MIL-M-38510 with the exception that the "JAN" or "J" certification mark shall not be used for device type 10.

1.2.1 Device type. The device type shall be as follows:

Device type	Circuit
01	Quadruple, 2-input positive NAND gate
02	Quadruple, 2-input positive NAND gate (open collector output)
03	Hex, 1-input inverter gate
04	Hex, 1-input inverter gate (open collector output)
05	Triple, 3-input positive NAND gate
06	Dual, 4-input positive NAND gate
07	Dual, 4-input positive NAND gate (open collector output)
08	Single, 8-input positive NAND gate
09	Single, 13-input positive NAND gate
10 1/	Single, 12-input positive NAND gate (*tri-state output*)

1.2.2 Device class. The device class shall be the product assurance level as defined in MIL-M-38510

1.2.3 Case outline. The case outline shall be designated as follows:

Letter	Case outline (see MIL-M-38510, appendix C)
A	F-1 (14-lead, 1/4" x 1/4"), flat package
B	F-3 (14-lead, 3/16" x 1/4"), flat package
C	D-1 (14-lead, 1/4" x 3/4"), dual-in-line package
D	F-2 (14-lead, 1/4" x 3/8"), flat pacakge
E	D-2 (16-lead, 1/4" x 7/8"), dual-in-line package
F	F-5 (16-lead, 1/4" x 3/8"), flat package

1/ Qualification requirements removed for this device type.

Beneficial comments (recommendations, additions, deletions) and any pertinent data which may be of use in improving this document should be addressed to: Rome Air Development Center (RBE-2), Griffiss AFB, NY 13441, by using the self-addressed Standardization Document Improvement Proposal (DD Form 1426) appearing at the end of this document or by letter.

AMSC N/A FSC 5962
DISTRIBUTION STATEMENT A. Approved for public release; distribution is unlimited.

1.3 Absolute maximum ratings.

Supply voltage range- - - - - - - - - - - - - - -	-0.5 V to +7.0 V
Input voltage range - - - - - - - - - - - - - - -	-1.2 V at -18 mA to +5.5 V
Storage temperature range - - - - - - - - - - - -	-65°C to +150°C
Maximum power dissipation per gate (P_D) 2/:	
Device types 01 thru 07 - - - - - - - - - - - -	49.5 mW
Device types 08 and 09- - - - - - - - - - - - -	55.0 mW
Device type 10- - - - - - - - - - - - - - - - -	138.0 mW 3/
Lead temperature (soldering, 10 seconds)- - - -	300°C
Thermal resistance, junction to case (θ_{JC}):	
Cases A, B, C, D, E and F - - - - - - - - - - -	See MIL-M-38510, appendix C
Junction temperature (T_J) 4/- - - - - - - - - - -	175°C

1.4 Recommended operating conditions.

Supply voltage (V_{CC})- - - - - - - - - - - - - - -	4.5 V minimum to 5.5 V maximum
Minimum high level input voltage (V_{IH})- - - - -	2.0 V
Maximum low level input voltage (V_{IL}) 5/- - - -	0.8 V
Case operating temperature range (T_C) - - - - -	-55°C to +125°C

2. APPLICABLE DOCUMENTS

2.1 Government documents.

2.1.1 Specification and standard. The following specification and standard form a part of this specification to the extent specified herein. Unless otherwise specified, the issues of these documents shall be those listed in the issue of the Department of Defense Index of Specifications and Standards (DODISS) and supplement thereto, cited in the solicitation.

SPECIFICATION

MILITARY

MIL-M-38510 - Microcircuits, General Specification for.

STANDARD

MILITARY

MIL-STD-883 - Test Methods and Procedures for Microelectronics.

(Copies of the specification and standard required by manufacturers in connection with specific acquisition functions should be obtained from the contracting activity or as directed by the contracting activity.)

2.2 Order of precedence. In the event of a conflict between the text of this specification and the references cited herein (except for associated detail specifications, specification sheets or MS standards), the text of this specification shall take precedence. Nothing in this specification, however, shall supersede applicable laws and regulations unless a specific exemption has been obtained.

3. REQUIREMENTS

3.1 Detail specification. The individual item requirements shall be in accordance with MIL-M-38510, and as specified herein.

3.2 Design, construction, and physical dimensions. The design, construction, and physical dimensions shall be as specified in MIL-M-38510 and herein.

2/ Must withstand the added P_D due to short-circuit test (e.g., I_{OS}).
3/ Qualification requirement removed for this device type.
4/ Maximum junction temperature shall not be exceeded except for allowable short duration burn-in screeging condition per method 5004 of MIL-STD-883.
5/ V_{IL} = 0.7 volts at 125°C.

TABLE I. Electrical characteristics.

Test	Symbol	Conditions $-55^{\circ}C \leq T_C \leq +125^{\circ}C$	Device type	Limits Min	Limits Max	Unit
High-level output voltage	V_{OH}	V_{CC} = 4.5 V; V_{IN} = 0.8 V; I_{OH} = -1 mA @T_C = +125°C; V_{IN} = 0.7 V	01,03, 05,06, 08,09	2.5		V
		V_{CC} = 4.5 V; V_{IN} = 0.8 V; I_{OH} = -2 mA @T_C = +125°C; V_{IN} = 0.7 V	10 1/	2.4		V
Low-level output voltage	V_{OL}	V_{CC} = 4.5 V; V_{IN} = 2.0 V; I_{OL} = 20 mA	All 2/	0.2	0.5	V
		T_C = +125°C	All 2/		0.45	V
Input clamp voltage	V_{IC}	V_{CC} = 4.5 V; I_{IN} = -18 mA; T_C = +25°C	All 2/		-1.2	V
Collector cut-off current	I_{CEX}	V_{CC} = 4.5 V; V_{IL} = V_{IC} max V_{IH} = 5.5 V	02,04,07		250	µA
		V_{CC} = 5.5 V; V_{IL} = GND V_{IH} = 5.5 V	01,03, 05,06, 08,09, 10 2/		250	µA
High-level input current	I_{IH1}	V_{CC} = 5.5 V; V_{IN} = 2.7 V	All 2/		50	µA
	I_{IH2}	V_{CC} = 5.5 V; V_{IN} = 5.5 V	All 2/		1	mA
Low-level input current	I_{IL}	V_{CC} = 5.5 V; V_{IN} = 0.5 V	All 2/	-1	-2	mA
Short-circuit output current	I_{OS}	V_{CC} = 5.5 V 3/	01,03, 05,06, 08,09	-40	-110	mA
High-level supply current, per gate	I_{CCH}	V_{CC} = 5.5 V; V_{IN} = 0 V	01,03, 05,06		4	mA
			02,04,07		3.3	mA
			08,09		5	mA
Low-level supply current, per gate	I_{CCL}	V_{CC} = 5.5 V; V_{IN} = 5.5 V	01 thru 07		9	mA
			08,09		10	mA

See footnotes at end of table.

TABLE I. Electrical characteristics - Continued.

Test	Symbol	Conditions $-55^{\circ}C \leq T_C \leq +125^{\circ}C$		Device type	Limits Min	Limits Max	Unit
Supply current	I_{CC}	V_{CC} = 5.5 V	Output high	10 1/		13	mA
			Output low	10 1/		16	mA
			Output off	10 1/		25	mA
Propagation delay time, high-to-low level	t_{PHL}	C_L = 50 pF; R_L = 280Ω; V_{CC} = 5.0 V		01,03, 05,06	2	9	ns
				02,04,07	2	14	ns
				08,09	2	10	ns
				10 1/	2	10.5	ns
Propagation delay time, low-to-high level	t_{PLH}	C_L = 50 pF; R_L = 280Ω; V_{CC} = 5.0 V		01,03, 05,06	2	9	ns
				02,04,07	2	14	ns
				08,09,10 2/	2	9	ns
Output enable time to high level	t_{ZH}	C_L = 50 pF; R_L = 280Ω; V_{CC} = 5.0 V		10 1/	2	25	ns
Output enable time to low level	t_{ZL}	C_L = 50 pF; R_L = 280Ω; V_{CC} = 5.0 V		10 1/	2	26	ns
Output disable time from high level	t_{HZ}	C_L = 15 pF; V_{CC} = 5.0 V		10 1/	2	11	ns
Output disable time from low level	t_{LZ}	C_L = 15 pF; V_{CC} = 5.0 V		10 1/	2	17	ns

1/ Qualification requirements removed for this device type.

2/ Qualification requirements removed for device type 10.

3/ Not more than one output should be shorted at a time.

3.2.1 Logic diagrams and terminal connections. The logic diagrams and terminal connections shall be as specified on figure 1.

3.2.2 Truth tables and logic equations. The truth tables and logic equations shall be as specified on figure 2.

3.2.3 Schematic circuits. Schematic circuits shall be submitted to the preparing activity prior to inclusion of a manufacturer's device in the specification and shall be submitted to the qualifying activity and agent activity (DESC-ECS) as a prerequisite for qualification. All qualified manufacturers' schematics shall be maintained by the agent activity and will be available upon request.

3.2.4 Case outlines. The case outlines shall be as specified in 1.2.3.

3.3 Lead material and finish. The lead material and finish shall be in accordance with MIL-M-38510 (see 6.9).

3.4 Electrical performance characteristics. Unless otherwise specified, the electrical performance characteristics are as specified in table I, and apply over the full recommended case operating temperature range.

3.5 Electrical test requirements. The electrical test requirements for each device class shall be the subgroups specified in table II. The electrical tests for each subgroup are described in table III.

3.6 Marking. Marking shall be in accordance with MIL-M-38510 and 1.2 herein. At the option of the manufacturer, marking of the country of origin may be omitted from the body of the microcircuit, but shall be retained on the initial container. The "JAN" or "J" certification mark shall not be used for device type 10.

3.7 Microcircuit group assignment. The devices covered by this specification, except device type 10 for which qualification requirements have been removed, shall be in microcircuit group number 8 (see MIL-M-38510, appendix E).

TABLE II. Electrical test requirements.

MIL-STD-883 test requirements	Subgroups (see table III)	
	Class S devices 1/	Class B devices
Interim electrical test parameters (method 5004)	1	1
Final electrical test parameters (method 5004)	1*,2,3,9, 10, 11	1*,2,3,9
Group A electrical tests (method 5005)	1,2,3,9, 10,11	1,2,3,9
Group B electrical tests (method 5005, subgroup 5) 2/	1,2,3,9, 10,11	N/A
Group C end-point electrical parameters (method 5005)	N/A	1,2,3
Additional electrical tests for group C inspection	N/A	10,11
Group D end-point electrical parameters (method 5005)	1,2,3	1,2,3

*PDA applies to subgroup 1 (see 4.2c).
1/ Class S product assurance class is not applicable for device type 10.
2/ Group B test requirements shall be applied only to device types 01, 02, 03, 04, 05, 06, 07, 08, 09.

Text continues on page 40.

Device types 01 and 02

Cases A, B, C and D

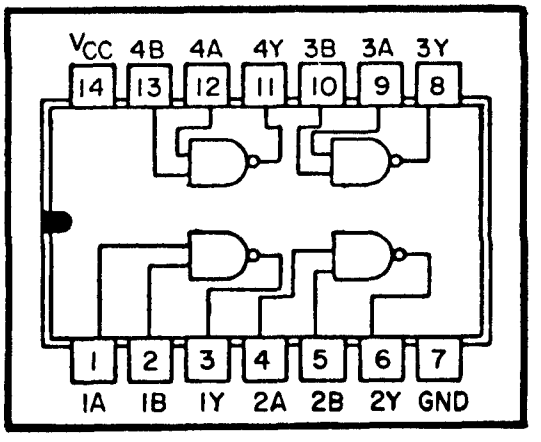

Device types 03 and 04

Cases A, B, C and D

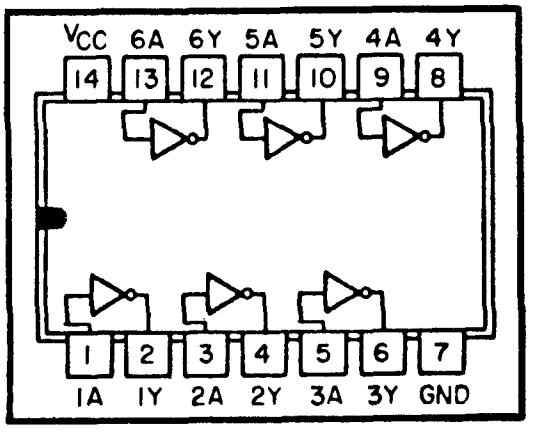

FIGURE 1. Logic diagram and terminal connections (top views).

Device type 05

Cases A, B, C and D

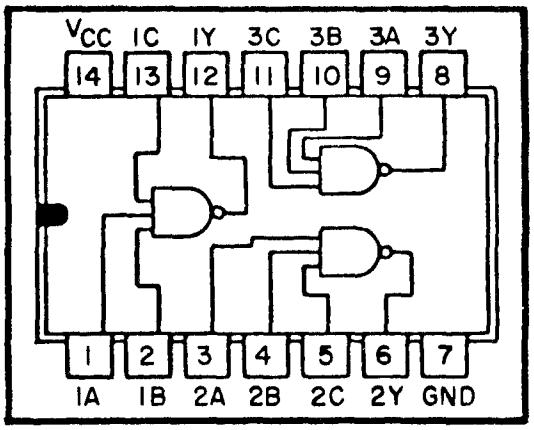

Device types 06 and 07

Cases A, B, C and D

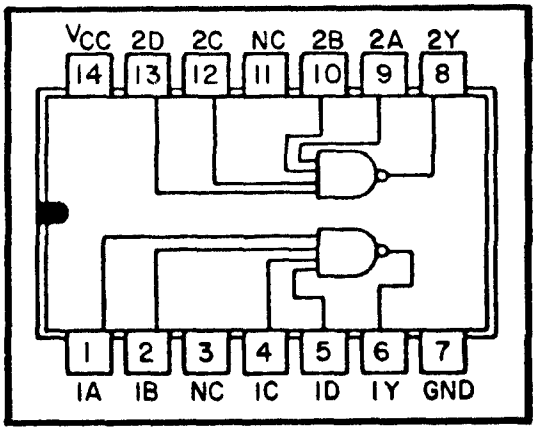

Device type 08

Cases A, B, C and D

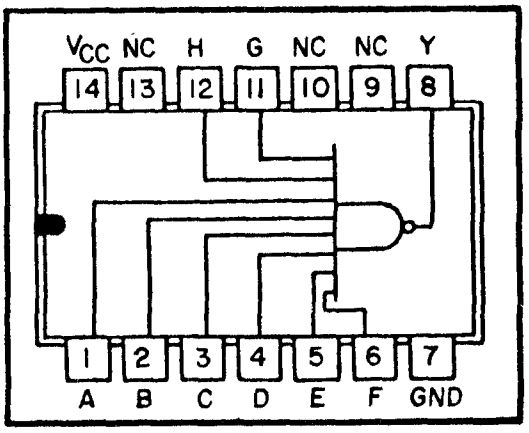

FIGURE 1. Logic diagram and terminal connections (top views) - Continued.

Device type 09

Cases E and F

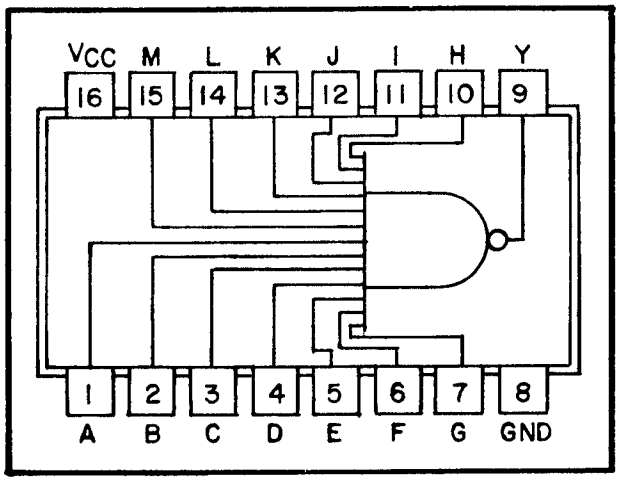

Device type 10 1/

Cases E and F

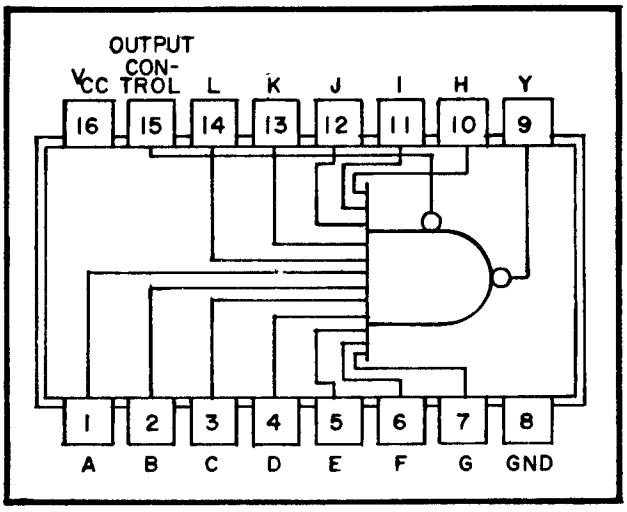

1/ Qualification requirements removed for this device type.

FIGURE 1. Logic diagram and terminal connections (top views) - Continued.

Device types 01 and 02

Truth table each gate		
Input		Output
A	B	Y
L	L	H
H	L	H
L	H	H
H	H	L

Positive logic $Y = \overline{AB}$

Device types 03 and 04

Truth table each gate	
Input	Output
A	Y
L	H
H	L

Positive logic $Y = \overline{A}$

Device type 05

Truth table each gate			
Input			Output
A	B	C	Y
L	L	L	H
H	L	L	H
L	H	L	H
H	H	L	H
L	L	H	H
H	L	H	H
L	H	H	H
H	H	H	L

Positive logic $Y = \overline{ABC}$

Device types 06 and 07

Truth table each gate				
Input				Output
A	B	C	D	Y
L	L	L	L	H
H	L	L	L	H
L	H	L	L	H
H	H	L	L	H
L	L	H	L	H
H	L	H	L	H
L	H	H	L	H
H	H	H	L	H
L	L	L	H	H
H	L	L	H	H
L	H	L	H	H
H	H	L	H	H
L	L	H	H	H
H	L	H	H	H
L	H	H	H	H
H	H	H	H	L

Positive logic $Y = \overline{ABCD}$

FIGURE 2. Truth tables and logic equations.

Device type 08

Truth table								
Inputs								Output
A	B	C	D	E	F	G	H	Y
H	H	H	H	H	H	H	H	L
All other combinations of H and L at the inputs give H output.								

Positive logic $Y = \overline{ABCDEFGH}$

Device type 09

Truth table													
Inputs													Output
A	B	C	D	E	F	G	H	I	J	K	L	M	Y
H	H	H	H	H	H	H	H	H	H	H	H	H	L
All other combinations of H and L at the inputs give H output.													

Positive logic $Y = \overline{ABCDEFGHIJKLM}$

Device type 10 1/

Truth table													
Inputs													Output
A	B	C	D	E	F	G	H	I	J	K	L	Output control	Y
H	H	H	H	H	H	H	H	H	H	H	H	L	L
← Any number of inputs low →												L	H
Whatever the state of the inputs the output is in the high Z state												H	Z

NOTE: Z = High impedance state (output off)

Positive logic $Y = \overline{ABCDEFGHIJKL}$ (with output control low)

1/ Qualification requirements removed for this device type.

FIGURE 2. Truth tables and logic equations - Continued.

Device types 01 and 02

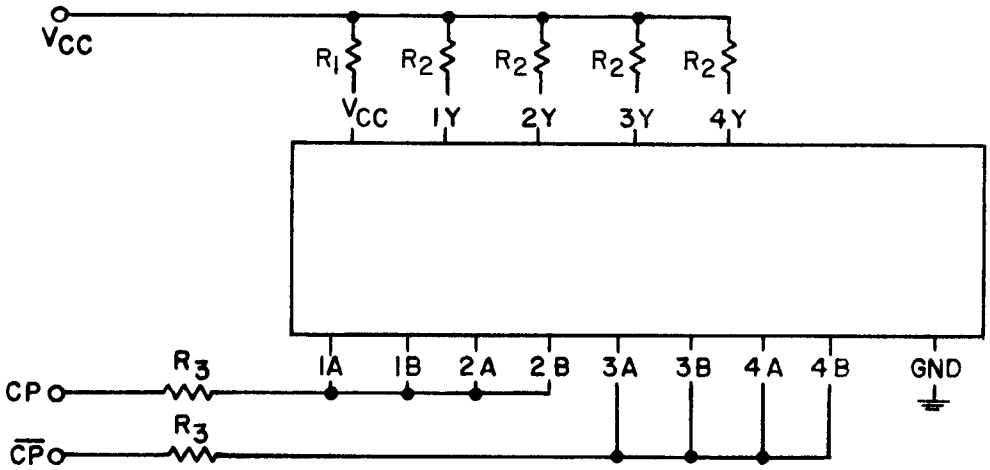

NOTES:

1. CP or $\overline{CP}$ = 100 kHz ±50% square wave; duty cycle = 50 ±15%
   V_{IL} = -0.5 V min to 0.8 V max; V_{IH} = 2.0 V min to 5.5 V max.
2. R_2 = 220 Ω ±5%, R_3 = 27 Ω ±5%.
3. R_1 and V_{CC} shall be chosen to insure a 5.5 V min at device V_{CC} terminal.

Device types 03 and 04

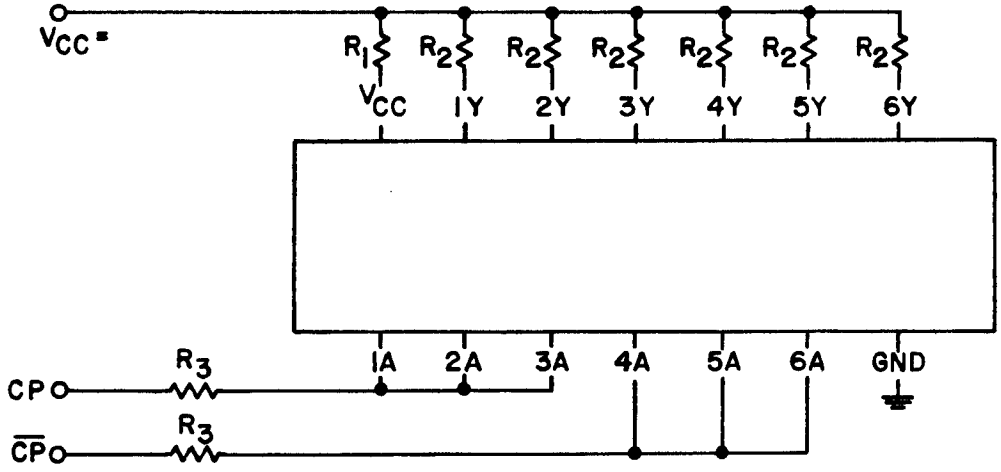

NOTES:

1. CP or $\overline{CP}$ = 100 kHz ±50% square wave; duty cycle = 50 ±15%
   V_{IL} = -0.5 V min to 0.8 V max; V_{IH} = 2.0 V min to 5.5 V max.
2. R_2 = 220 Ω ±5%, R_3 = 27 Ω ±5%.
3. R_1 and V_{CC} shall be chosen to insure a 5.5 V min at device V_{CC} terminal.

FIGURE 3. Burn-in and life test circuit.

Device type 05

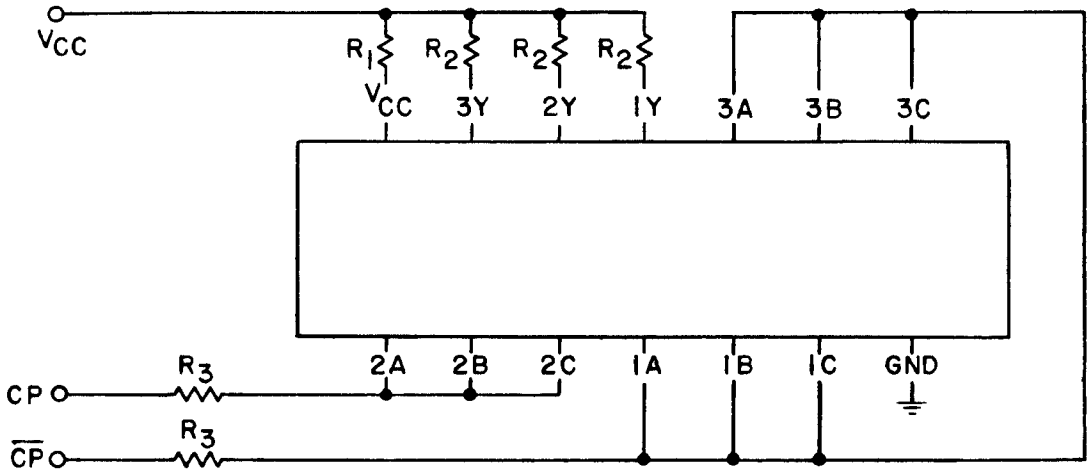

NOTES:
1. CP or $\overline{CP}$ = 100 kHz ±50% square wave; duty cycle = 50 ±15%; V_{IL} = -0.5 V minimum to 0.8 V maximum; V_{IH} = 2.0 V minimum to 5.5 V maximum.
2. R_2 = 220Ω ±5%; R_3 = 27Ω ±5%.
3. V_{CC} and R_1 shall be chosen to insure a 5.0 V minimum is present at device V_{CC} terminal.

Device types 06 and 07

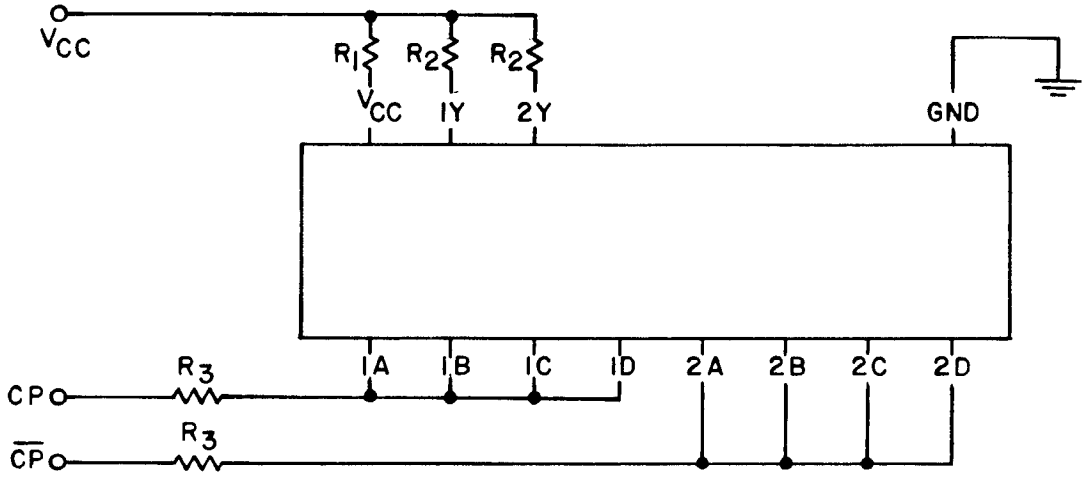

NOTES:
1. CP or $\overline{CP}$ = 100 kHz ±50% square wave; duty cycle = 50 ±15%; V_{IL} = -0.5 V minimum to 0.8 V maximum; V_{IH} = 2.0 V minimum to 5.5 V maximum.
2. R_2 = 220Ω ±5%; R_3 = 27Ω ±5%.
3. V_{CC} and R_1 shall be chosen to insure a 5.0 V minimum is present at device V_{CC} terminal.

FIGURE 3. Burn-in and life test circuit - Continued.

Device type 08

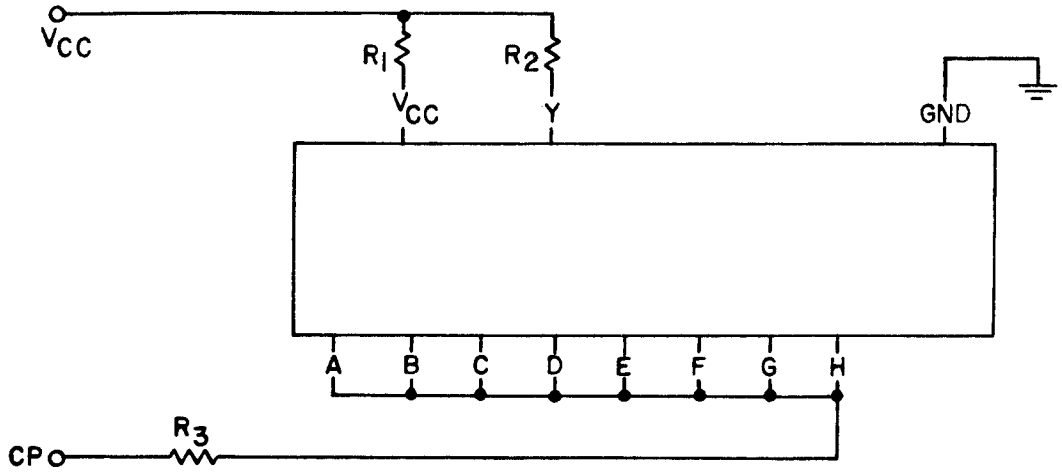

NOTES:
1. CP = 100 kHz ±50% square wave; duty cycle = 50 ±15%; V_{IL} = -0.5 V minimum to 0.8 V maximum; V_{IH} = 2.0 V minimum to 5.5 V maximum.
2. R_2 = 220Ω ±5%; R_3 = 27Ω ±5%.
3. V_{CC} and R_1 shall be chosen to insure a 5.0 V minimum is present at device V_{CC} terminal.

Device type 09

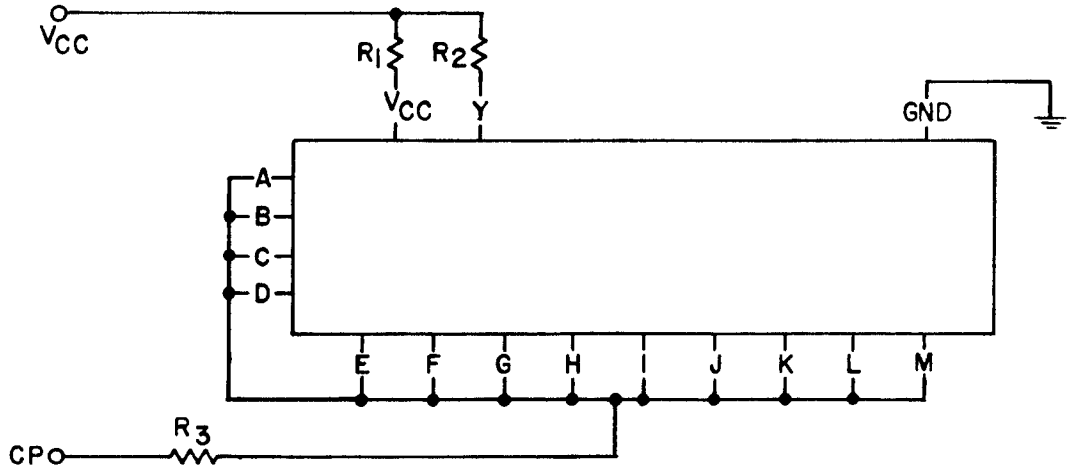

NOTES:
1. CP = 100 kHz ±50% square wave; duty cycle = 50 ±15%; V_{IL} = -0.5 V minimum to 0.8 V maximum; V_{IH} = 2.0 V minimum to 5.5 V maximum.
2. R_2 = 220Ω ±5%; R_3 = 27Ω ±5%.
3. V_{CC} and R_1 shall be chosen to insure a 5.0 V minimum is present at device V_{CC} terminal.

FIGURE 3. Burn-in and life test circuit - Continued.

Device type 10

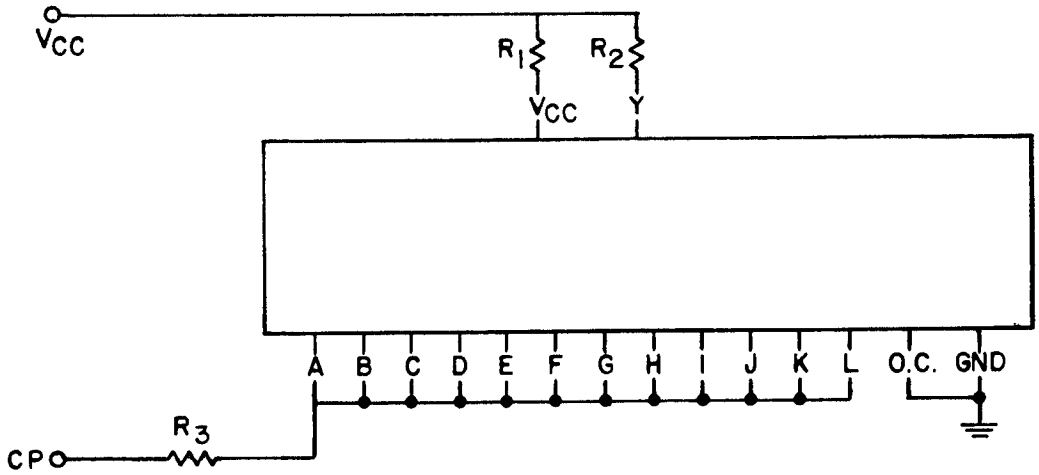

NOTES:

1. CP = 100 kHz ±50% square wave; duty cycle = 50 ±15%; V_{IL} = -0.5 V minimum to 0.8 V maximum; V_{IH} = 2.0 V minimum to 5.5 V maximum.
2. R_2 = 220Ω ±5%; R_3 = 27Ω ±5%.
3. V_{CC} and R_1 shall be chosen to insure a 5.0 V minimum is present at device V_{CC} terminal.
4. Qualification requirements removed for this device type.

FIGURE 3. Burn-in and life test circuit - Continued.

Device types 01 thru 09

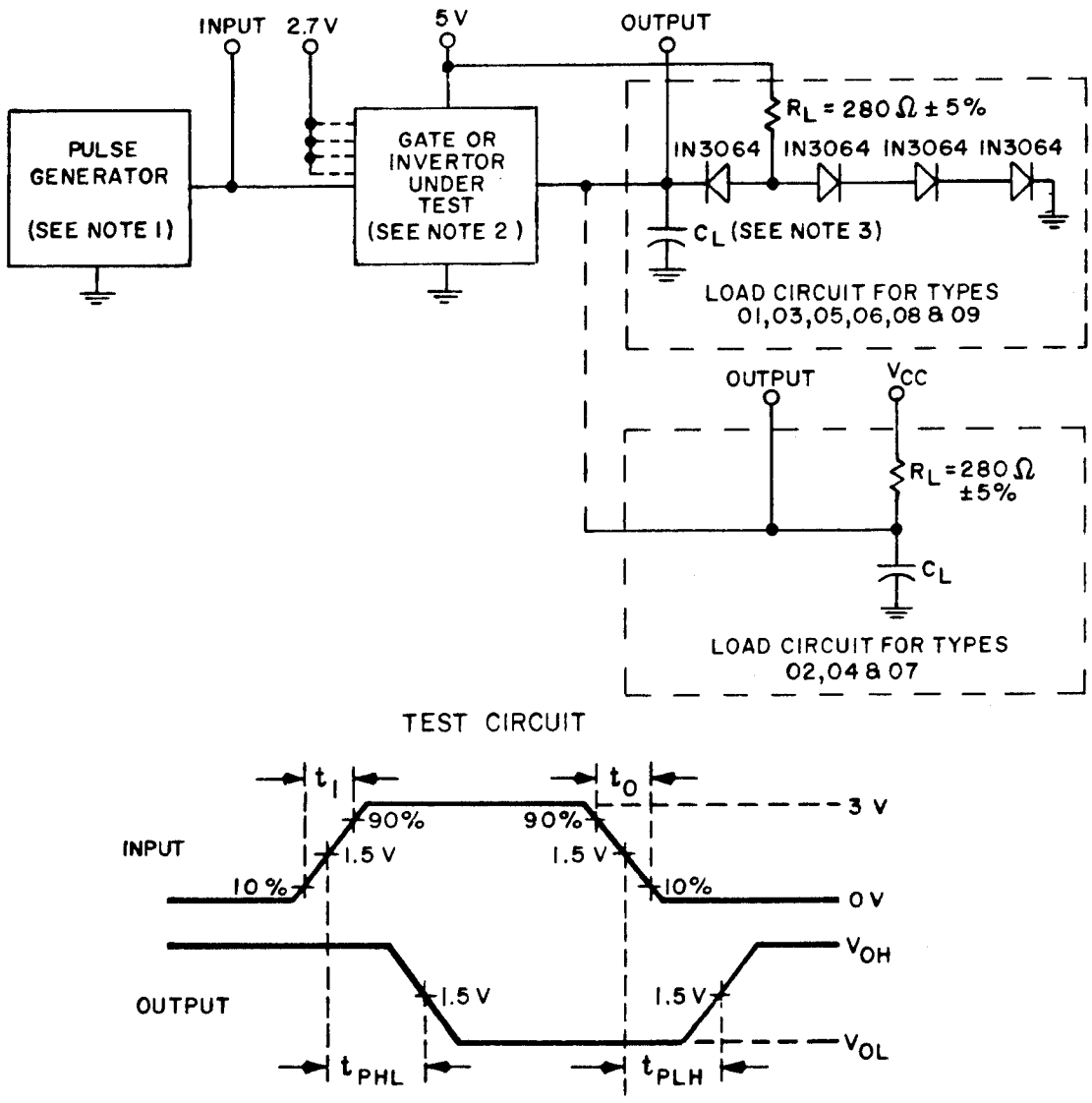

NOTES:
1. Pulse generator has the following characteristics: $t_1 = t_0 \leq 2.5$ ns, PRR $\leq$ 1 MHz, and $Z_{OUT} \approx 50\,\Omega$.
2. Inputs not under test are at 2.7 V.
3. C_L = 50 pF ±10%, including scope probe, wiring, and stray capacitance, without package in test fixture.
4. Voltage measurements are to be made with respect to network ground terminal.

FIGURE 4. Switching time test circuit and waveforms for device types 01 through 09.

Device type 10 1/

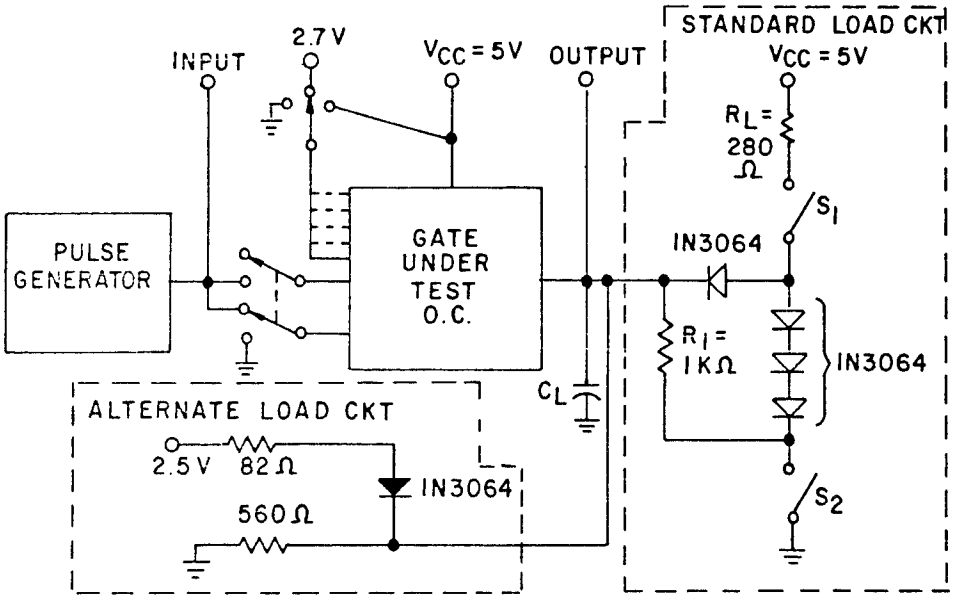

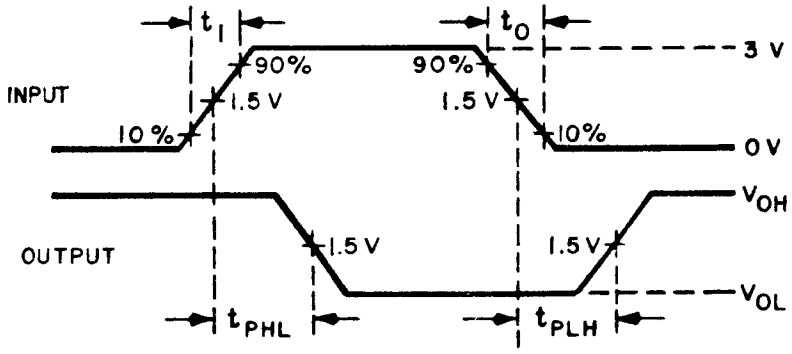

NOTE: All resistances ±5%.

1/ Qualification requirements removed for this device type.

FIGURE 5. Switching time test circuit for device type 10.

Device type 10

(Waveforms for standard load)

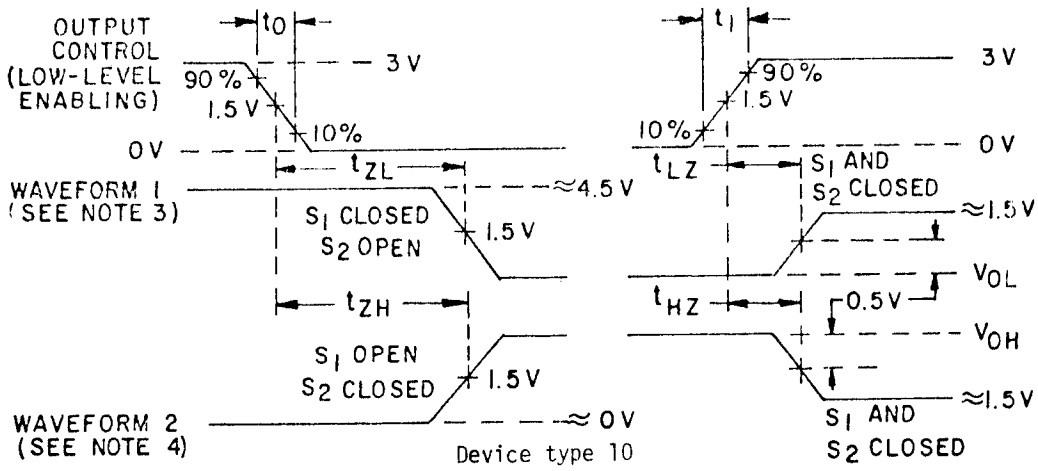

Device type 10

(Waveforms for alternate load)

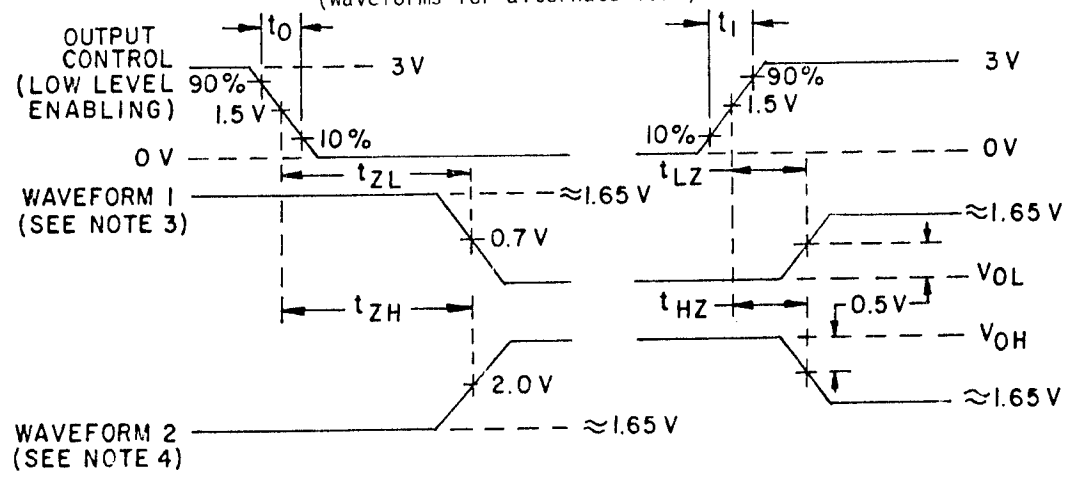

NOTES:

1. Pulse generator has the following characteristics: PRR $\leq$ 1 MHz, $t_0 = t_1 \leq 2.5$ ns, $Z_{OUT} = 50\Omega$.
2. Capacitor C_L includes probe, jig and wiring capacitance value is 50 pF ±10% for all tests when the alternate load is used. Value is 50 pF ±10% for t_{PHL}, t_{PLH}, t_{ZH} and t_{ZL} tests and 15 pF minimum for t_{LZ} and t_{HZ} tests when the standard load is used.
3. Waveform 1 is for an output with internal conditions such that the output is low except when disabled by the output control.
4. Waveform 2 is for an output with internal conditions such that the output is high except when disabled by the output control.
5. Manufacturer may test with either the standard load circuit or the alternate load circuit at his option.
6. Qualification requirements removed for this device type.

FIGURE 5. Switching time test circuit for device type 10 - Continued.

TABLE III. Group A inspection for device type 01.
Terminal conditions (pins not designated may be high ≥2.0 V, low ≤0.8 V, or open)

Subgroup	Symbol	MIL-STD-883 method	Cases A, B,C,D Test no.	1	2	3	4	5	6	7	8	9	10	11	12	13	14	Measured terminal	Test limits Min	Test limits Max	Unit
				1A	1B	1Y	2A	2B	2Y	GND	3Y	3A	3B	4Y	4A	4B	V_{CC}				
1 T_C = 25°C	V_{OH}	3006	1	5.5 V	0.8 V	-1 mA	5.5 V	5.5 V		GND		5.5 V	5.5 V		5.5 V	5.5 V	4.5 V	1Y	2.5		V
		"	2	0.8 V	5.5 V	-1 mA	"	5.5 V		"		"	"		"	"	"	1Y	"		"
		"	3	5.5 V	"		"	0.8 V	-1 mA	"		"	"		"	"	"	2Y	"		"
		"	4	"	"		0.8 V	5.5 V	-1 mA	"		"	"		"	"	"	2Y	"		"
		"	5	"	"		5.5 V	"		"	-1 mA	"	0.8 V		"	"	"	3Y	"		"
		"	6	"	"		"	"		"	-1 mA	0.8 V	5.5 V		"	"	"	3Y	"		"
		"	7	"	"		"	"		"		5.5 V	"	-1 mA	"	0.8 V	"	4Y	"		"
		"	8	"	"		"	"		"		5.5 V	"	-1 mA	0.8 V	5.5 V	"	4Y	"		"
	V_{OL}	3007	9	2.0 V	2.0 V	20 mA	GND	GND		"		GND	GND		2.0 V	2.0 V	"	1Y	0.2	0.5	"
		"	10	GND	GND		2.0 V	2.0 V	20 mA	"		GND	GND		"	"	"	2Y	"	"	"
		"	11	"	"		GND	GND		"	20 mA	2.0 V	2.0 V		"	"	"	3Y	"	"	"
		"	12	"	"		GND	GND		"		GND	GND	20 mA	"	"	"	4Y	"	"	"
	V_{IC}		13	-18 mA						"							"	1A		-1.2	"
			14		-18 mA					"							"	1B		"	"
			15				-18 mA			"							"	2A		"	"
			16					-18 mA		"							"	2B		"	"
			17							"		-18 mA					"	3A		"	"
			18							"			-18 mA				"	3B		"	"
			19							"					-18 mA		"	4A		"	"
			20							"						-18 mA	"	4B		"	"
	I_{IH1}	3010	21	2.7 V	GND		GND	GND		"		GND	GND		GND	GND	5.5 V	1A		50	μA
		"	22	GND	2.7 V		GND	"		"		"	"		"	"	"	1B		"	"
		"	23	"	GND		2.7 V	"		"		"	"		"	"	"	2A		"	"
		"	24	"	"		GND	2.7 V		"		"	"		"	"	"	2B		"	"
		"	25	"	"		"	GND		"		2.7 V	"		"	"	"	3A		"	"
		"	26	"	"		"	"		"		GND	2.7 V		"	"	"	3B		"	"
		"	27	"	"		"	"		"		"	GND		2.7 V	"	"	4A		"	"
		"	28	"	"		"	"		"		"	"		GND	2.7 V	"	4B		"	"
	I_{IH2}	"	29	5.5 V	"		"	"		"		"	"		"	GND	"	1A		1	mA
		"	30	GND	5.5 V		"	"		"		"	"		"	"	"	1B		"	"
		"	31	"	GND		5.5 V	"		"		"	"		"	"	"	2A		"	"
		"	32	"	"		GND	5.5 V		"		"	"		"	"	"	2B		"	"
		"	33	"	"		"	GND		"		5.5 V	"		"	"	"	3A		"	"
		"	34	"	"		"	"		"		GND	5.5 V		"	"	"	3B		"	"
		"	35	"	"		"	"		"		"	GND		5.5 V	"	"	4A		"	"
		"	36	"	"		"	"		"		"	GND		GND	5.5 V	"	4B		"	"
	I_{IL}	3009	37	0.5 V	5.5 V		5.5 V	5.5 V		"		5.5 V	5.5 V		5.5 V	"	"	1A	-1	-2	"
		"	38	5.5 V	0.5 V		5.5 V	"		"		"	"		"	"	"	1B	"	"	"
		"	39	"	5.5 V		0.5 V	"		"		"	"		"	"	"	2A	"	"	"
		"	40	"	"		5.5 V	0.5 V		"		"	"		"	"	"	2B	"	"	"
		"	41	"	"		"	5.5 V		"		0.5 V	"		"	"	"	3A	"	"	"
		"	42	"	"		"	"		"		5.5 V	0.5 V		"	"	"	3B	"	"	"
		"	43	"	"		"	"		"		"	5.5 V		0.5 V	"	"	4A	"	"	"
		"	44	"	"		"	"		"		"	5.5 V		5.5 V	0.5 V	"	4B	"	"	"
	I_{OS}	3011	45	GND	GND	GND	GND	GND	GND	"	GND	GND	GND	GND	GND	GND	"	1Y	-40	-100	"
		"	46							"							"	2Y	"	"	"
		"	47							"							"	3Y	"	"	"
		"	48							"							"	4Y	"	1/	"

See footnote at end of table.

TABLE III. Group A inspection for device type 01 - Continued.
Terminal conditions (pins not designated may be high ≥2.0 V, low ≤0.8 V, or open)

Subgroup	Symbol	MIL-STD-883 method	Cases A, B,C,D Test no.	1 IA	2 IB	3 1Y	4 2A	5 2B	6 2Y	7 GND	8 3Y	9 3A	10 3B	11 4Y	12 4A	13 4B	14 V_{CC}	Measured terminal	Test limits Min	Test limits Max	Unit
1 T_C = 25°C	I_{CCH}	3005	49	GND	GND		GND	GND		GND		GND	GND		GND	GND	5.5 V	V_{CC}		15	mA
	I_{CCL}	3005	50	5.5 V	5.5 V		5.5 V	5.5 V		"		5.5 V	5.5 V		5.5 V	5.5 V	"	V_{CC}		35	mA
	I_{CEX}		51	GND	GND	5.5 V	5.5 V	5.5 V		"		"	"		"	"	"	1Y		250	μA
			52	5.5 V	5.5 V		GND	GND	5.5 V	"		"	"		"	"	"	2Y		"	"
			53	"	"		5.5 V	5.5 V		"	5.5 V	GND	GND		"	"	"	3Y		"	"
			54	"	"		5.5 V	5.5 V		"		5.5 V	5.5 V	5.5 V	GND	GND	"	4Y		"	"
2	Same tests, terminal conditions, and limits as for subgroup 1, except T_C = 125°C and V_{IC} tests are omitted. V_{OL} (max) = 0.45 V and V_{IL} = 0.7 V.																				
3	Same tests, terminal conditions, and limits as for subgroup 1, except T_C = -55°C and V_{IC} tests are omitted.																				
9 T_C = 25°C	t_{PHL}	3003	55	IN	2.7 V	OUT	2.7 V	2.7 V		GND		2.7 V	2.7 V		2.7 V	2.7 V	5.0 V	1A to 1Y	2.0	7.5	ns
		Fig. 4	56	2.7 V	IN	OUT	2.7 V	"		"		"	"		"	"	"	1B to 1Y	"	"	"
		"	57	"	2.7 V		IN	"	OUT	"		"	"		"	"	"	2A to 2Y	"	"	"
		"	58	"	"		2.7 V	IN	OUT	"		"	"		"	"	"	2B to 2Y	"	"	"
		"	59	"	"		"	2.7 V		"	OUT	IN	"		"	"	"	3A to 3Y	"	"	"
		"	60	"	"		"	"		"	OUT	2.7 V	IN		"	"	"	3B to 3Y	"	"	"
		"	61	"	"		"	"		"		"	2.7 V	OUT	IN	"	"	4A to 4Y	"	"	"
		"	62	"	"		"	"		"		"	"	OUT	2.7 V	IN	"	4B to 4Y	"	"	"
	t_{PLH}	"	63	IN	"	OUT	"	"		"		"	"		"	2.7 V	"	1A to 1Y	"	7.0	"
		"	64	2.7 V	IN	OUT	"	"		"		"	"		"	"	"	1B to 1Y	"	"	"
		"	65	"	2.7 V		IN	"	OUT	"		"	"		"	"	"	2A to 2Y	"	"	"
		"	66	"	"		2.7 V	IN	OUT	"		"	"		"	"	"	2B to 2Y	"	"	"
		"	67	"	"		"	2.7 V		"	OUT	IN	"		"	"	"	3A to 3Y	"	"	"
		"	68	"	"		"	"		"	OUT	2.7 V	IN		"	"	"	3B to 3Y	"	"	"
		"	69	"	"		"	"		"		"	2.7 V	OUT	IN	"	"	4A to 4Y	"	"	"
		"	70	"	"		"	"		"		"	"	OUT	2.7 V	IN	"	4B to 4Y	"	"	"
10 T_C = 125°C	t_{PHL}	"	71	IN	"	OUT	"	"		"		"	"		"	2.7 V	"	1A to 1Y	"	9.0	"
		"	72	2.7 V	IN	OUT	"	"		"		"	"		"	"	"	1B to 1Y	"	"	"
		"	73	"	2.7 V		IN	"	OUT	"		"	"		"	"	"	2A to 2Y	"	"	"
		"	74	"	"		2.7 V	IN	OUT	"		"	"		"	"	"	2B to 2Y	"	"	"
		"	75	"	"		"	2.7 V		"	OUT	IN	"		"	"	"	3A to 3Y	"	"	"
		"	76	"	"		"	"		"	OUT	2.7 V	IN		"	"	"	3B to 3Y	"	"	"
		"	77	"	"		"	"		"		"	2.7 V	OUT	IN	"	"	4A to 4Y	"	"	"
		"	78	"	"		"	"		"		"	"	OUT	2.7 V	IN	"	4B to 4Y	"	"	"
	t_{PLH}	"	79	IN	"	OUT	"	"		"		"	"		"	2.7 V	"	1A to 1Y	"	"	"
		"	80	2.7 V	IN	OUT	"	"		"		"	"		"	"	"	1B to 1Y	"	"	"
		"	81	"	2.7 V		IN	"	OUT	"		"	"		"	"	"	2A to 2Y	"	"	"
		"	82	"	"		2.7 V	IN	OUT	"		"	"		"	"	"	2B to 2Y	"	"	"
		"	83	"	"		"	2.7 V		"	OUT	IN	"		"	"	"	3A to 3Y	"	"	"
		"	84	"	"		"	"		"	OUT	2.7 V	IN		"	"	"	3B to 3Y	"	"	"
		"	85	"	"		"	"		"		"	2.7 V	OUT	IN	"	"	4A to 4Y	"	"	"
		"	86	"	"		"	"		"		"	2.7 V	OUT	2.7 V	IN	"	4B to 4Y	"	"	"
11	Same tests, terminal conditions, and limits as for subgroup 10, except T_C = -55°C.																				

1/ For circuit C, I_{OS} maximum test limits = -110 mA.

TABLE III. Group A inspection for device type 02.
Terminal conditions (pins not designated may be high ≥2.0 V, low ≤0.8 V, or open)

Subgroup	Symbol	MIL-STD-883 method	Cases A, B,C,D Test no.	1 1A	2 1B	3 1Y	4 2A	5 2B	6 2Y	7 GND	8 3Y	9 3A	10 3B	11 4Y	12 4A	13 4B	14 V_{CC}	Measured terminal	Test limits Min	Test limits Max	Unit
1 T_C = 25°C	V_{OL}	3007	1	2.0 V	2.0 V	20 mA	GND	GND		GND		GND	GND		GND	GND	4.5 V	1Y	0.2	0.5	V
		"	2	GND	GND		2.0 V	2.0 V	20 mA	"		GND	GND		"	"	"	2Y	"	"	"
		"	3	"	"		GND	GND		"	20 mA	2.0 V	2.0 V		"	"	"	3Y	"	"	"
		"	4	"	"		GND	GND		"		GND	GND	20 mA	2.0 V	2.0 V	"	4Y	"	"	"
	I_{CEX}		5	GND	5.5 V	5.5 V	5.5 V	5.5 V		"		5.5 V	5.5 V		5.5 V	5.5 V	"	1Y		250	μA
			6	5.5 V	GND	5.5 V	5.5 V	"		"		"	"		"	"	"	1Y		"	"
			7	"	5.5 V		GND	"	5.5 V	"		"	"		"	"	"	2Y		"	"
			8	"	"		5.5 V	GND	5.5 V	"		"	"		"	"	"	2Y		"	"
			9	"	"		"	5.5 V		"	5.5 V	GND	"		"	"	"	3Y		"	"
			10	"	"		"	"		"	5.5 V	5.5 V	GND		"	"	"	3Y		"	"
			11	"	"		"	"		"		"	5.5 V	5.5 V	GND	"	"	4Y		"	"
			12	"	"		"	"		"		"	5.5 V	5.5 V	5.5 V	GND	"	4Y		"	"
	V_{IC}		13	-18 mA						"							"	1A		-1.2	V
			14		-18 mA					"							"	1B		"	"
			15				-18 mA			"							"	2A		"	"
			16					-18 mA		"							"	2B		"	"
			17							"		-18 mA					"	3A		"	"
			18							"			-18 mA				"	3B		"	"
			19							"					-18 mA		"	4A		"	"
			20							"						-18 mA	"	4B		"	"
	I_{IH1}	3010	21	2.7 V	GND		GND	GND		"		GND	GND		GND	GND	5.5 V	1A		50	μA
		"	22	GND	2.7 V		GND	"		"		"	"		"	"	"	1B		"	"
		"	23	"	GND		2.7 V	"		"		"	"		"	"	"	2A		"	"
		"	24	"	"		GND	2.7 V		"		"	"		"	"	"	2B		"	"
		"	25	"	"		"	GND		"		2.7 V	"		"	"	"	3A		"	"
		"	26	"	"		"	"		"		GND	2.7 V		"	"	"	3B		"	"
		"	27	"	"		"	"		"		"	GND		2.7 V	"	"	4A		"	"
		"	28	"	"		"	"		"		"	"		GND	2.7 V	"	4B		"	"
	I_{IH2}	"	29	5.5 V	"		"	"		"		"	"		"	GND	"	1A		1	mA
		"	30	GND	5.5 V		"	"		"		"	"		"	"	"	1B		"	"
		"	31	"	GND		5.5 V	"		"		"	"		"	"	"	2A		"	"
		"	32	"	"		GND	5.5 V		"		"	"		"	"	"	2B		"	"
		"	33	"	"		"	GND		"		5.5 V	"		"	"	"	3A		"	"
		"	34	"	"		"	"		"		GND	5.5 V		"	"	"	3B		"	"
		"	35	"	"		"	"		"		"	GND		5.5 V	"	"	4A		"	"
		"	36	"	"		"	"		"		"	GND		GND	5.5 V	"	4B		"	"
	I_{IL}	3009	37	0.5 V	5.5 V		5.5 V	5.5 V		"		5.5 V	5.5 V		5.5 V	"	"	1A	-1	-2	"
		"	38	5.5 V	0.5 V		5.5 V	"		"		"	"		"	"	"	1B	"	"	"
		"	39	"	5.5 V		0.5 V	"		"		"	"		"	"	"	2A	"	"	"
		"	40	"	"		5.5 V	0.5 V		"		"	"		"	"	"	2B	"	"	"
		"	41	"	"		"	5.5 V		"		0.5 V	"		"	"	"	3A	"	"	"
		"	42	"	"		"	"		"		5.5 V	0.5 V		"	"	"	3B	"	"	"
		"	43	"	"		"	"		"		"	5.5 V		0.5 V	"	"	4A	"	"	"
		"	44	"	"		"	"		"		"	"		5.5 V	0.5 V	"	4B	"	"	"
	I_{CCL}	3005	45	"	"		"	"		"		"	"		5.5 V	5.5 V	"	V_{CC}		36	"
	I_{CCH}	3005	46	GND	GND		GND	GND		"		GND	GND		GND	GND	"	V_{CC}		13.2	"

TABLE III. Group A inspection for device type 02 - Continued.
Terminal conditions (pins not designated may be high ≥2.0 V, low ≤0.8 V, or open)

Subgroup	Symbol	MIL-STD-883 method	Cases A, 3,C,D Test no.	1 1A	2 1B	3 1Y	4 2A	5 2B	6 2Y	7 GND	8 3Y	9 3A	10 3B	11 4Y	12 4A	13 4B	14 V_{CC}	Measured terminal	Test limits Min	Test limits Max	Unit
2	Same tests, terminal conditions, and limits as for subgroup 1, except T_C = 125°C and V_{IC} tests are omitted. V_{OL} (max) = 0.45 V.																				
3	Same tests, terminal conditions, and limits as for subgroup 1, except T_C = -55°C and V_{IC} tests are omitted.																				
9 T_C = 25°C	t_{PHL}	3003 Fig. 4	47	IN	2.7 V	OUT	2.7 V	2.7 V		GND		2.7 V	2.7 V		2.7 V	2.7 V	5.0 V	1A to 1Y	2.0	11.0	ns
		"	48	2.7 V	IN	OUT	2.7 V	"		"		"	"		"	"	"	1B to 1Y	"	"	"
		"	49	"	2.7 V		IN	"	OUT	"		"	"		"	"	"	2A to 2Y	"	"	"
		"	50	"	"		2.7 V	IN	OUT	"		"	"		"	"	"	2B to 2Y	"	"	"
		"	51	"	"		"	2.7 V		"	OUT	IN	"		"	"	"	3A to 3Y	"	"	"
		"	52	"	"		"	"		"	OUT	2.7 V	IN		"	"	"	3B to 3Y	"	"	"
		"	53	"	"		"	"		"		"	2.7 V	OUT	IN	"	"	4A to 4Y	"	"	"
		"	54	"	"		"	"		"		"	"	OUT	2.7 V	IN	"	4B to 4Y	"	"	"
	t_{PLH}	"	55	IN	"	OUT	"	"		"		"	"		"	2.7 V	"	1A to 1Y	"	12.0	"
		"	56	2.7 V	IN	OUT	"	"		"		"	"		"	"	"	1B to 1Y	"	"	"
		"	57	"	2.7 V		IN	"	OUT	"		"	"		"	"	"	2A to 2Y	"	"	"
		"	58	"	"		2.7 V	IN	OUT	"		"	"		"	"	"	2B to 2Y	"	"	"
		"	59	"	"		"	2.7 V		"	OUT	IN	"		"	"	"	3A to 3Y	"	"	"
		"	60	"	"		"	"		"	OUT	2.7 V	IN		"	"	"	3B to 3Y	"	"	"
		"	61	"	"		"	"		"		"	2.7 V	OUT	IN	"	"	4A to 4Y	"	"	"
		"	62	"	"		"	"		"		"	"	OUT	2.7 V	IN	"	4B to 4Y	"	"	"
10 T_C = 125°C	t_{PHL}	"	63	IN	"	OUT	"	"		"		"	"		"	2.7 V	"	1A to 1Y	"	14.0	"
		"	64	2.7 V	IN	OUT	"	"		"		"	"		"	"	"	1B to 1Y	"	"	"
		"	65	"	2.7 V		IN	"	OUT	"		"	"		"	"	"	2A to 2Y	"	"	"
		"	66	"	"		2.7 V	IN	OUT	"		"	"		"	"	"	2B to 2Y	"	"	"
		"	67	"	"		"	2.7 V		"	OUT	IN	"		"	"	"	3A to 3Y	"	"	"
		"	68	"	"		"	"		"	OUT	2.7 V	IN		"	"	"	3B to 3Y	"	"	"
		"	69	"	"		"	"		"		"	2.7 V	OUT	IN	"	"	4A to 4Y	"	"	"
		"	70	"	"		"	"		"		"	"	OUT	2.7 V	IN	"	4B to 4Y	"	"	"
	t_{PLH}	"	71	IN	"	OUT	"	"		"		"	"		"	2.7 V	"	1A to 1Y	"	"	"
		"	72	2.7 V	IN	OUT	"	"		"		"	"		"	"	"	1B to 1Y	"	"	"
		"	73	"	2.7 V		IN	"	OUT	"		"	"		"	"	"	2A to 2Y	"	"	"
		"	74	"	"		2.7 V	IN	OUT	"		"	"		"	"	"	2B to 2Y	"	"	"
		"	75	"	"		"	2.7 V		"	OUT	IN	"		"	"	"	3A to 3Y	"	"	"
		"	76	"	"		"	"		"	OUT	2.7 V	IN		"	"	"	3B to 3Y	"	"	"
		"	77	"	"		"	"		"		"	2.7 V	OUT	IN	"	"	4A to 4Y	"	"	"
		"	78	"	"		"	"		"		"	2.7 V	OUT	2.7 V	IN	"	4B to 4Y	"	"	"
11	Same tests, terminal conditions, and limits as for subgroup 10, except T_C = -55°C.																				

TABLE III. Group A inspection for device type 03.
Terminal conditions (pins not designated may be high ≥2.0 V, low ≤0.8 V, or open)

Subgroup	Symbol	MIL-STD-883 method	Cases A, B,C,D Test no.	1 1A	2 1Y	3 2A	4 2Y	5 3A	6 3Y	7 GND	8 4Y	9 4A	10 5Y	11 5A	12 6Y	13 6A	14 V_{CC}	Measured terminal	Test limits Min	Test limits Max	Unit
1 T_C = 25°C	V_{OH}	3006	1	0.8 V	-1 mA	5.5 V		5.5 V		GND		5.5 V		5.5 V		5.5 V	4.5 V	1Y	2.5		V
		"	2	5.5 V		0.8 V	-1 mA	5.5 V		"		"		"		"	"	2Y	"		"
		"	3	"		5.5 V		0.8 V	-1 mA	"		"		"		"	"	3Y	"		"
		"	4	"		"		5.5 V		"	-1 mA	0.8 V		"		"	"	4Y	"		"
		"	5	"		"		"		"		5.5 V	-1 mA	0.8 V		"	"	5Y	"		"
		"	6	"		"		"		"		5.5 V		5.5 V	-1 mA	0.8 V	"	6Y	"		"
	V_{OL}	3007	7	2.0 V	20 mA	GND		GND		"		GND		GND		GND	"	1Y	0.2	0.5	"
		"	8	GND		2.0 V	20 mA	GND		"		"		"		"	"	2Y	"	"	"
		"	9	"		GND		2.0 V	20 mA	"		"		"		"	"	3Y	"	"	"
		"	10	"		"		GND		"	20 mA	2.0 V		"		"	"	4Y	"	"	"
		"	11	"		"		"		"		GND	20 mA	2.0 V		"	"	5Y	"	"	"
		"	12	"		"		"		"		GND		GND	20 mA	2.0 V	"	6Y	"	"	"
	V_{IC}		13	-18 mA						"							"	1A		-1.2	"
			14			-18 mA				"							"	2A		"	"
			15					-18 mA		"							"	3A		"	"
			16							"		-18 mA					"	4A		"	"
			17							"				-18 mA			"	5A		"	"
			18							"						-18 mA	"	6A		"	"
	I_{IH1}	3010	19	2.7 V		GND		GND		"		GND		GND		GND	5.5 V	1A		50	μA
		"	20	GND		2.7 V		GND		"		"		"		"	"	2A		"	"
		"	21	"		GND		2.7 V		"		"		"		"	"	3A		"	"
		"	22	"		"		GND		"		2.7 V		"		"	"	4A		"	"
		"	23	"		"		"		"		GND		2.7 V		"	"	5A		"	"
		"	24	"		"		"		"		"		GND		2.7 V	"	6A		"	"
	I_{IH2}	"	25	5.5 V		"		"		"		"		"		GND	"	1A		1	mA
		"	26	GND		5.5 V		"		"		"		"		"	"	2A		"	"
		"	27	"		GND		5.5 V		"		"		"		"	"	3A		"	"
		"	28	"		"		GND		"		5.5 V		"		"	"	4A		"	"
		"	29	"		"		"		"		GND		5.5 V		"	"	5A		"	"
		"	30	"		"		"		"		GND		GND		5.5 V	"	6A		"	"
	I_{IL}	3009	31	0.5 V		5.5 V		5.5 V		"		5.5 V		5.5 V		"	"	1A	-1	-2	"
		"	32	5.5 V		0.5 V		5.5 V		"		"		"		"	"	2A	"	"	"
		"	33	"		5.5 V		0.5 V		"		"		"		"	"	3A	"	"	"
		"	34	"		"		5.5 V		"		0.5 V		"		"	"	4A	"	"	"
		"	35	"		"		"		"		5.5 V		0.5 V		"	"	5A	"	"	"
		"	36	"		"		"		"		5.5 V		5.5 V		0.5 V	"	6A	"	"	"
	I_{OS}	3011	37	GND	GND					"							"	1Y	-40	-100	"
		"	38			GND	GND			"							"	2Y	"	"	"
		"	39					GND	GND	"							"	3Y	"	"	"
		"	40							"	GND	GND					"	4Y	"	"	"
		"	41							"			GND	GND			"	5Y	"	"	"
		"	42							"					GND	GND	"	6Y	"	"	"
																				1/	
	I_{CCH}	3005	43	GND		GND		GND		"		GND		GND		GND	"	V_{CC}		24	"
	I_{CCL}	3005	44	5.5 V		5.5 V		5.5 V		"		5.5 V		5.5 V		5.5 V	"	V_{CC}		54	"

See footnote at end of table.

TABLE III. Group A inspection for device type 03 - Continued.
Terminal conditions (pins not designated may be high ≥2.0 V, low ≤0.8 V, or open)

Subgroup	Symbol	MIL-STD-883 method	Cases A, B,C,D Test no.	1 IA	2 1Y	3 2A	4 2Y	5 3A	6 3Y	7 GND	8 4Y	9 4A	10 5Y	11 5A	12 6Y	13 6A	14 V_{CC}	Measured terminal	Test limits Min	Test limits Max	Unit
1 T_C = 25°C	I_{CEX}		45	GND	5.5 V	5.5 V		5.5 V		GND		5.5 V		5.5 V		5.5 V	5.5 V	1Y		250	μA
			46	5.5 V		GND	5.5 V	5.5 V		"		"		"		"	"	2Y		"	"
			47	"		5.5 V		GND	5.5 V	"		"		"		"	"	3Y		"	"
			48	"		"		5.5 V		"	5.5 V	GND		"		"	"	4Y		"	"
			49	"		"		"		"		5.5 V	5.5 V	GND		"	"	5Y		"	"
			50	"		"		"		"		5.5 V		5.5 V	5.5 V	GND	"	6Y		"	"
2	Same tests, terminal conditions, and limits as for subgroup 1, except T_C = 125°C and V_{IC} tests are omitted. V_{OL} (max) = 0.45 V and V_{IL} = 0.7 V.																				
3	Same tests, terminal conditions, and limits as for subgroup 1, except T_C = -55°C and V_{IC} tests are omitted.																				
9 T_C = 25°C	t_{PHL}	3003 Fig. 4	51	IN	OUT	2.7 V		2.7 V		GND		2.7 V		2.7 V		2.7 V	5.0 V	1A to 1Y	2.0	7.5	ns
		"	52	2.7 V		IN	OUT	2.7 V		"		"		"		"	"	2A to 2Y	"	"	"
		"	53	"		2.7 V		IN	OUT	"		"		"		"	"	3A to 3Y	"	"	"
		"	54	"		"		2.7 V		"	OUT	IN		"		"	"	4A to 4Y	"	"	"
		"	55	"		"		"		"		2.7 V	OUT	IN		"	"	5A to 5Y	"	"	"
		"	56	"		"		"		"		"		2.7 V	OUT	IN	"	6A to 6Y	"	"	"
	t_{PLH}	"	57	IN	OUT	"		"		"		"		"		2.7 V	"	1A to 1Y	"	7.0	"
		"	58	2.7 V		IN	OUT	"		"		"		"		"	"	2A to 2Y	"	"	"
		"	59	"		2.7 V		IN	OUT	"		"		"		"	"	3A to 3Y	"	"	"
		"	60	"		"		2.7 V		"	OUT	IN		"		"	"	4A to 4Y	"	"	"
		"	61	"		"		"		"		2.7 V	OUT	IN		"	"	5A to 5Y	"	"	"
		"	62	"		"		"		"		"		2.7 V	OUT	IN	"	6A to 6Y	"	"	"
10 T_C = 125°C	t_{PHL}	"	63	IN	OUT	"		"		"		"		"		2.7 V	"	1A to 1Y	"	9.0	"
		"	64	2.7 V		IN	OUT	"		"		"		"		"	"	2A to 2Y	"	"	"
		"	65	"		2.7 V		IN	OUT	"		"		"		"	"	3A to 3Y	"	"	"
		"	66	"		"		2.7 V		"	OUT	IN		"		"	"	4A to 4Y	"	"	"
		"	67	"		"		"		"		2.7 V	OUT	IN		"	"	5A to 5Y	"	"	"
		"	68	"		"		"		"		"		2.7 V	OUT	IN	"	6A to 6Y	"	"	"
	t_{PLH}	"	69	IN	OUT	"		"		"		"		"		2.7 V	"	1A to 1Y	"	"	"
		"	70	2.7 V		IN	OUT	"		"		"		"		"	"	2A to 2Y	"	"	"
		"	71	"		2.7 V		IN	OUT	"		"		"		"	"	3A to 3Y	"	"	"
		"	72	"		"		2.7 V		"	OUT	IN		"		"	"	4A to 4Y	"	"	"
		"	73	"		"		"		"		2.7 V	OUT	IN		"	"	5A to 5Y	"	"	"
		"	74	"		"		"		"		2.7 V		2.7 V	OUT	IN	"	6A to 6Y	"	"	"
11	Same tests, terminal conditions, and limits as for subgroup 10, except T_C = -55°C.																				

1/ For circuit C, I_{OS} maximum test limits = -110 mA.

TABLE III. Group A inspection for device type 04.
Terminal conditions (pins not designated may be high ≥2.0 V, low ≤0.8 V, or open)

Subgroup	Symbol	MIL-STD-883 method	Cases A, B,C,D Test no.	1 1A	2 1Y	3 2A	4 2Y	5 3A	6 3Y	7 GND	8 4Y	9 4A	10 5Y	11 5A	12 6Y	13 5A	14 V_{CC}	Measured terminal	Test limits Min	Test limits Max	Unit
1 T_C = 25°C	V_{OL}	3007	1	2.0 V	20 mA	GND		GND		GND		GND		GND		GND	4.5 V	1Y	0.2	0.5	V
		"	2	GND		2.0 V	20 mA	GND		"		"		"		"	"	2Y	"	"	"
		"	3	"		GND		2.0 V	20 mA	"		"		"		"	"	3Y	"	"	"
		"	4	"		"		GND		"	20 mA	2.0 V		"		"	"	4Y	"	"	"
		"	5	"		"		"		"		GND	20 mA	2.0 V		"	"	5Y	"	"	"
		"	6	"		"		"		"		GND		GND	20 mA	2.0 V	"	6Y	"	"	"
	I_{CEX}		7	GND	5.5 V	5.5 V		5.5 V		"		5.5 V		5.5 V		5.5 V	"	1Y		250	µA
			8	5.5 V		GND	5.5 V	5.5 V		"		"		"		"	"	2Y		"	"
			9	"		5.5 V		GND	5.5 V	"		"		"		"	"	3Y		"	"
			10	"		"		5.5 V		"	5.5 V	GND		"		"	"	4Y		"	"
			11	"		"		"		"		5.5 V	5.5 V	GND		"	"	5Y		"	"
			12	"		"		"		"		5.5 V		5.5 V	5.5 V	GND	"	6Y		"	"
	V_{IC}		13	-18 mA						"							"	1A		-1.2	V
			14			-18 mA				"							"	2A		"	"
			15					-18 mA		"							"	3A		"	"
			16							"		-18 mA					"	4A		"	"
			17							"				-18 mA			"	5A		"	"
			18							"						-18 mA	"	6A		"	"
	I_{IH1}	3010	19	2.7 V		GND		GND		"		GND		GND		GND	5.5 V	1A		50	µA
		"	20	GND		2.7 V		GND		"		"		"		"	"	2A		"	"
		"	21	"		GND		2.7 V		"		"		"		"	"	3A		"	"
		"	22	"		"		GND		"		2.7 V		"		"	"	4A		"	"
		"	23	"		"		"		"		GND		2.7 V		"	"	5A		"	"
		"	24	"		"		"		"		"		GND		2.7 V	"	6A		"	"
	I_{IH2}	"	25	5.5 V		"		"		"		"		"		GND	"	1A		1	mA
		"	26	GND		5.5 V		"		"		"		"		"	"	2A		"	"
		"	27	"		GND		5.5 V		"		"		"		"	"	3A		"	"
		"	28	"		"		GND		"		5.5 V		"		"	"	4A		"	"
		"	29	"		"		"		"		GND		5.5 V		"	"	5A		"	"
		"	30	"		"		"		"		GND		GND		5.5 V	"	6A		"	"
	I_{IL}	3009	31	0.5 V		5.5 V		5.5 V		"		5.5 V		5.5 V		"	"	1A	-1	-2	"
		"	32	5.5 V		0.5 V		5.5 V		"		"		"		"	"	2A	"	"	"
		"	33	"		5.5 V		0.5 V		"		"		"		"	"	3A	"	"	"
		"	34	"		"		5.5 V		"		0.5 V		"		"	"	4A	"	"	"
		"	35	"		"		"		"		5.5 V		0.5 V		"	"	5A	"	"	"
		"	36	"		"		"		"		"		5.5 V		0.5 V	"	6A	"	"	"
	I_{CCL}	3005	37	"		"		"		"		"		5.5 V		5.5 V	"	V_{CC}		54	"
	I_{CCH}	3005	38	GND		GND		GND		"		GND		GND		GND	"	V_{CC}		19.8	"

TABLE III. Group A inspection for device type 04 - Continued.
Terminal conditions (pins not designated may be high ≥2.0 V, low ≤0.8 V, or open)

Subgroup	Symbol	MIL-STD-883 method	Cases A, 3,C,D Test no.	1 1A	2 1Y	3 2A	4 2Y	5 3A	6 3Y	7 GND	8 4Y	9 4A	10 5Y	11 5A	12 6Y	13 6A	14 V_{CC}	Measured terminal	Test limits Min	Test limits Max	Unit
2	Same tests, terminal conditions, and limits as for subgroup 1, except T_C = 125°C and V_{IC} tests are omitted. V_{OL} (max) = 0.45 V.																				
3	Same tests, terminal conditions, and limits as for subgroup 1, except T_C = -55°C and V_{IC} tests are omitted.																				
9 T_C = 25°C	t_{PHL}	3003 Fig. 4	39	IN	OUT	2.7 V		2.7 V		GND		2.7 V		2.7 V		2.7 V	5.0 V	1A to 1Y	2.0	11.5	ns
		"	40	2.7 V		IN	OUT	2.7 V		"		"		"		"	"	2A to 2Y	"	"	"
		"	41	"		2.7 V		IN	OUT	"		"		"		"	"	3A to 3Y	"	"	"
		"	42	"		"		2.7 V		"	OUT	IN		"		"	"	4A to 4Y	"	"	"
		"	43	"		"		"		"		2.7 V	OUT	IN		"	"	5A to 5Y	"	"	"
		"	44	"		"		"		"		"		2.7 V	OUT	IN	"	6A to 6Y	"	"	"
	t_{PLH}	"	45	IN	OUT	"		"		"		"		"		"	"	1A to 1Y	"	12.0	"
		"	46	2.7 V		IN	OUT	"		"		"		"		"	"	2A to 2Y	"	"	"
		"	47	"		2.7 V		IN	OUT	"		"		"		"	"	3A to 3Y	"	"	"
		"	48	"		"		2.7 V		"	OUT	IN		"		"	"	4A to 4Y	"	"	"
		"	49	"		"		"		"		2.7 V	OUT	IN		"	"	5A to 5Y	"	"	"
		"	50	"		"		"		"		"		2.7 V	OUT	IN	"	6A to 6Y	"	"	"
10 T_C = 125°C	t_{PHL}	"	51	IN	OUT	"		"		"		"		"		2.7 V	"	1A to 1Y	"	14	"
		"	52	2.7 V		IN	OUT	"		"		"		"		"	"	2A to 2Y	"	"	"
		"	53	"		2.7 V		IN	OUT	"		"		"		"	"	3A to 3Y	"	"	"
		"	54	"		"		2.7 V		"	OUT	IN		"		"	"	4A to 4Y	"	"	"
		"	55	"		"		"		"		2.7 V	OUT	IN		"	"	5A to 5Y	"	"	"
		"	56	"		"		"		"		"		2.7 V	OUT	IN	"	6A to 5Y	"	"	"
	t_{PLH}	"	57	IN	OUT	"		"		"		"		"		2.7 V	"	1A to 1Y	"	"	"
		"	58	2.7 V		IN	OUT	"		"		"		"		"	"	2A to 2Y	"	"	"
		"	59	"		2.7 V		IN	OUT	"		"		"		"	"	3A to 3Y	"	"	"
		"	60	"		"		2.7 V		"	OUT	IN		"		"	"	4A to 4Y	"	"	"
		"	61	"		"		"		"		2.7 V	OUT	IN		"	"	5A to 5Y	"	"	"
		"	62	"		"		"		"		2.7 V		2.7 V	OUT	IN	"	6A to 6Y	"	"	"
11	Same tests, terminal conditions, and limits as for subgroup 10, except T_C = -55°C.																				

TABLE III. Group A inspection for device type 05.
Terminal conditions (pins not designated may be high ≥2.0 V, low ≤0.8 V, or open)

Subgroup	Symbol	MIL-STD-883 method	Cases A, B,C,D Test no.	1 1A	2 1B	3 2A	4 2B	5 2C	6 2Y	7 GND	8 3Y	9 3A	10 3B	11 3C	12 1Y	13 1C	14 V_{CC}	Measured terminal	Test limits Min	Test limits Max	Unit
1 T_C = 25°C	V_{OH}	3006	1	0.8 V	5.5 V	5.5 V	5.5 V	5.5 V		GND		5.5 V	5.5 V	5.5 V	-1 mA	5.5 V	4.5 V	1Y	2.5		V
		"	2	5.5 V	0.8 V	"	"	"		"		"	"	"	"	5.5 V	"	1Y	"		"
		"	3	"	5.5 V	"	"	"		"		"	"	"	"	0.8 V	"	1Y	"		"
		"	4	"	"	0.8 V	"	"	-1 mA	"		"	"	"		5.5 V	"	2Y	"		"
		"	5	"	"	5.5 V	0.8 V	"	"	"		"	"	"		"	"	2Y	"		"
		"	6	"	"	"	5.5 V	0.8 V	"	"		"	"	"		"	"	2Y	"		"
		"	7	"	"	"	"	5.5 V		"	-1 mA	0.8 V	"	"		"	"	3Y	"		"
		"	8	"	"	"	"	"		"	"	5.5 V	0.8 V	"		"	"	3Y	"		"
		"	9	"	"	"	"	"		"	"	5.5 V	5.5 V	0.8 V		"	"	3Y	"		"
	V_{OL}	3007	10	2.0 V	2.0 V	GND	GND	GND		"		GND	GND	GND	20 mA	2.0 V	"	1Y	0.2	0.5	"
		"	11	GND	GND	2.0 V	2.0 V	2.0 V	20 mA	"		GND	GND	GND		GND	"	2Y	"	"	"
		"	12	GND	GND	GND	GND	GND		"	20 mA	2.0 V	2.0 V	2.0 V		GND	"	3Y	"	"	"
	V_{IC}		13	-18 mA						"							"	1A		-1.2	"
			14		-18 mA					"							"	1B		"	"
			15			-18 mA				"							"	2A		"	"
			16				-18 mA			"							"	2B		"	"
			17					-18 mA		"							"	2C		"	"
			18							"		-18 mA					"	3A		"	"
			19							"			-18 mA				"	3B		"	"
			20							"				-18 mA			"	3C		"	"
			21							"						-18 mA	"	1C		"	"
	I_{IH1}	3010	22	2.7 V	GND	GND	GND	GND		"		GND	GND	GND		GND	5.5 V	1A		50	μA
		"	23	GND	2.7 V	"	"	"		"		"	"	"		GND	"	1B		"	"
		"	24	"	GND	"	"	"		"		"	"	"		2.7 V	"	1C		"	"
		"	25	"	"	2.7 V	"	"		"		"	"	"		GND	"	2A		"	"
		"	26	"	"	GND	2.7 V	"		"		"	"	"		"	"	2B		"	"
		"	27	"	"	"	GND	2.7 V		"		"	"	"		"	"	2C		"	"
		"	28	"	"	"	"	GND		"		2.7 V	"	"		"	"	3A		"	"
		"	29	"	"	"	"	"		"		GND	2.7 V	"		"	"	3B		"	"
		"	30	"	"	"	"	"		"		"	GND	2.7 V		"	"	3C		"	"
	I_{IH2}	"	31	5.5 V	"	"	"	"		"		"	"	GND		"	"	1A		1	mA
		"	32	GND	5.5 V	"	"	"		"		"	"	"		"	"	1B		"	"
		"	33	"	GND	"	"	"		"		"	"	"		5.5 V	"	1C		"	"
		"	34	"	"	5.5 V	"	"		"		"	"	"		GND	"	2A		"	"
		"	35	"	"	GND	5.5 V	"		"		"	"	"		"	"	2B		"	"
		"	36	"	"	"	GND	5.5 V		"		"	"	"		"	"	2C		"	"
		"	37	"	"	"	"	GND		"		5.5 V	"	"		"	"	3A		"	"
		"	38	"	"	"	"	"		"		GND	5.5 V	"		"	"	3B		"	"
		"	39	"	"	"	"	"		"		GND	GND	5.5 V		"	"	3C		"	"
	I_{IL}	3009	40	0.5 V	5.5 V	5.5 V	5.5 V	5.5 V		"		5.5 V	5.5 V	"		5.5 V	"	1A	-1	-2	"
		"	41	5.5 V	0.5 V	"	"	"		"		"	"	"		5.5 V	"	1B	"	"	"
		"	42	"	5.5 V	"	"	"		"		"	"	"		0.5 V	"	1C	"	"	"
		"	43	"	"	0.5 V	"	"		"		"	"	"		5.5 V	"	2A	"	"	"
		"	44	"	"	5.5 V	0.5 V	"		"		"	"	"		"	"	2B	"	"	"
		"	45	"	"	"	5.5 V	0.5 V		"		"	"	"		"	"	2C	"	"	"
		"	46	"	"	"	"	5.5 V		"		0.5 V	"	"		"	"	3A	"	"	"
		"	47	"	"	"	"	"		"		5.5 V	0.5 V	"		"	"	3B	"	"	"
		"	48	"	"	"	"	"		"		5.5 V	5.5 V	0.5 V		"	"	3C	"	"	"

See footnote at end of table.

TABLE III. Group A inspectio vice type 05 - Continued.
Terminal conditions (pins not designat e high ≥2.0 V, low ≤0.8 V, or open)

Subgroup	Symbol	MIL-STD-883 method	Cases A, B,C,D Test no.	1 1A	2 1B	3 2A	4 2B	5 2C	6 2Y	7 GND	8 3Y	9 3A	10 3B	11 3C	12 1Y	13 1C	14 V_{CC}	Measured terminal	Test limits Min	Test limits Max	Unit
1 T_C = 25°C	I_{OS}	3011	49	GND	GND					GND					GND	GND	5.5 V	1Y	-40	-100	mA
		"	50			GND	GND	GND	GND	"							"	2Y	"	"	"
		"	51							"	GND	GND	GND	GND			"	3Y	"	" 1/	"
	I_{CEX}		52	GND	GND	5.5 V	5.5 V	5.5 V		"		5.5 V	5.5 V	5.5 V	5.5 V	GND	5.5 V	1Y		250	μA
			53	5.5 V	5.5 V	GND	GND	GND	5.5 V	"		5.5 V	5.5 V	5.5 V		5.5 V	"	2Y		"	"
			54	5.5 V	5.5 V	5.5 V	5.5 V	5.5 V		"	5.5 V	GND	GND	GND		5.5 V	"	3Y		"	"
	I_{CCH}	3005	55	GND	GND	GND	GND	GND		"		GND	GND	GND		GND	"	V_{CC}		12	mA
	I_{CCL}	3005	56	5.5 V	5.5 V	5.5 V	5.5 V	5.5 V		"		5.5 V	5.5 V	5.5 V		5.5 V	"	V_{CC}		27	mA
2	Same tests, terminal conditions, and limits as for subgroup 1, except T_C = 125°C and V_{IC} tests are omitted. V_{OL} (max) = 0.45 V and V_{IL} = 0.7 V.																				
3	Same tests, terminal conditions, and limits as for subgroup 1, except T_C = -55°C and V_{IC} tests are omitted.																				
9 T_C = 25°C	t_{PHL}	3003	57	IN	2.7 V	2.7 V	2.7 V	2.7 V		GND		2.7 V	2.7 V	2.7 V	OUT	2.7 V	5.0 V	1A to 1Y	2.0	7.5	ns
		"	58	2.7 V	IN	"	"	"		"		"	"	"	"	2.7 V	"	1B to 1Y	"	"	"
		"	59	"	2.7 V	"	"	"		"		"	"	"	"	IN	"	1C to 1Y	"	"	"
		"	60	"	"	IN	"	"	OUT	"		"	"	"		2.7 V	"	2A to 2Y	"	"	"
		"	61	"	"	2.7 V	IN	"	"	"		"	"	"		"	"	2B to 2Y	"	"	"
		"	62	"	"	"	2.7 V	IN	"	"		"	"	"		"	"	2C to 2Y	"	"	"
		"	63	"	"	"	"	2.7 V		"	OUT	IN	"	"		"	"	3A to 3Y	"	"	"
		"	64	"	"	"	"	"		"	"	2.7 V	IN	"		"	"	3B to 3Y	"	"	"
		"	65	"	"	"	"	"		"	"	"	2.7 V	IN		"	"	3C to 3Y	"	"	"
	t_{PLH}	"	66	IN	"	"	"	"		"		"	"	2.7 V	OUT	"	"	1A to 1Y	"	7.0	"
		"	67	2.7 V	IN	"	"	"		"		"	"	"	"	"	"	1B to 1Y	"	"	"
		"	68	"	2.7 V	"	"	"		"		"	"	"	"	IN	"	1C to 1Y	"	"	"
		"	69	"	"	IN	"	"	OUT	"		"	"	"		2.7 V	"	2A to 2Y	"	"	"
		"	70	"	"	2.7 V	IN	"	"	"		"	"	"		"	"	2B to 2Y	"	"	"
		"	71	"	"	"	2.7 V	IN	"	"		"	"	"		"	"	2C to 2Y	"	"	"
		"	72	"	"	"	"	2.7 V		"	OUT	IN	"	"		"	"	3A to 3Y	"	"	"
		"	73	"	"	"	"	"		"	"	2.7 V	IN	"		"	"	3B to 3Y	"	"	"
		"	74	"	"	"	"	"		"	"	"	2.7 V	IN		"	"	3C to 3Y	"	"	"
10 T_C = 125°C	t_{PHL}	"	75	IN	"	"	"	"		"		"	"	2.7 V	OUT	"	"	1A to 1Y	"	9.0	"
		"	76	2.7 V	IN	"	"	"		"		"	"	"	"	"	"	1B to 1Y	"	"	"
		"	77	"	2.7 V	"	"	"		"		"	"	"	"	IN	"	1C to 1Y	"	"	"
		"	78	"	"	IN	"	"	OUT	"		"	"	"		2.7 V	"	2A to 2Y	"	"	"
		"	79	"	"	2.7 V	IN	"	"	"		"	"	"		"	"	2B to 2Y	"	"	"
		"	80	"	"	"	2.7 V	IN	"	"		"	"	"		"	"	2C to 2Y	"	"	"
		"	81	"	"	"	"	2.7 V		"	OUT	IN	"	"		"	"	3A to 3Y	"	"	"
		"	82	"	"	"	"	"		"	"	2.7 V	IN	"		"	"	3B to 3Y	"	"	"
		"	83	"	"	"	"	"		"	"	"	2.7 V	IN		"	"	3C to 3Y	"	"	"
	t_{PLH}	"	84	IN	"	"	"	"		"		"	"	2.7 V	OUT	"	"	1A to 1Y	"	"	"
		"	85	2.7 V	IN	"	"	"		"		"	"	"	"	"	"	1B to 1Y	"	"	"
		"	86	"	2.7 V	"	"	"		"		"	"	"	"	IN	"	1C to 1Y	"	"	"
		"	87	"	"	IN	"	"	OUT	"		"	"	"		2.7 V	"	2A to 2Y	"	"	"
		"	88	"	"	2.7 V	IN	"	"	"		"	"	"		"	"	2B to 2Y	"	"	"
		"	89	"	"	"	2.7 V	IN	"	"		"	"	"		"	"	2C to 2Y	"	"	"
		"	90	"	"	"	"	2.7 V		"	OUT	IN	"	"		"	"	3A to 3Y	"	"	"
		"	91	"	"	"	"	"		"	"	2.7 V	IN	"		"	"	3B to 3Y	"	"	"
		"	92	"	"	"	"	"		"	"	2.7 V	2.7 V	IN		"	"	3C to 3Y	"	"	"
11	Same tests, terminal conditions, and limits as for subgroup 10, except T_C = -55°C.																				

1/ For circuit C, I_{OS} maximum test limits = -110 mA.

TABLE III. Group A inspection for device type 06.
Terminal conditions (pins not designated may be high ≥2.0 V, low ≤0.8 V, or open)

Subgroup	Symbol	MIL-STD-883 method	Cases A, B,C,D Test no.	1 1A	2 1B	3 NC	4 1C	5 1D	6 1Y	7 GND	8 2Y	9 2A	10 2B	11 NC	12 2C	13 2D	14 V_{CC}	Measured terminal	Test limits Min	Test limits Max	Unit
T_C = 25°C [1]	V_{OH}	3006	1	0.8 V	5.5 V	GND	5.5 V	5.5 V	-1 mA	GND		5.5 V	5.5 V	GND	5.5 V	5.5 V	4.5 V	1Y	2.5		V
		"	2	5.5 V	0.8 V	"	5.5 V	"	"	"		"	"	"	"	"	"	1Y	"		"
		"	3	"	5.5 V	"	0.8 V	"	"	"		"	"	"	"	"	"	1Y	"		"
		"	4	"	"	"	5.5 V	0.8 V	"	"		"	"	"	"	"	"	1Y	"		"
		"	5	"	"	"	"	5.5 V		"	-1 mA	0.8 V	"	"	"	"	"	2Y	"		"
		"	6	"	"	"	"	"		"	"	5.5 V	0.8 V	"	"	"	"	2Y	"		"
		"	7	"	"	"	"	"		"	"	"	5.5 V	"	0.8 V	"	"	2Y	"		"
		"	8	"	"	"	"	"		"	"	"	5.5 V	"	5.5 V	0.8 V	"	2Y	"		"
	V_{OL}	3007	9	2.0 V	2.0 V	"	2.0 V	2.0 V	20 mA	"		GND	GND	"	GND	GND	"	1Y	0.2	0.5	"
		3007	10	GND	GND	"	GND	GND		"	20 mA	2.0 V	2.0 V	"	2.0 V	2.0 V	"	2Y	0.2	0.5	"
	V_{IC}		11	-18 mA		"				"				"			"	1A		-1.2	"
			12		-18 mA	"				"				"			"	1B		"	"
			13			"	-18 mA			"				"			"	1C		"	"
			14			"		-18 mA		"				"			"	1D		"	"
			15			"				"		-18 mA		"			"	2A		"	"
			16			"				"			-18 mA	"			"	2B		"	"
			17			"				"				"	-18 mA		"	2C		"	"
			18			"				"				"		-18 mA	"	2D		"	"
	I_{IH1}	3010	19	2.7 V	GND	"	GND	GND		"		GND	GND	"	GND	GND	5.5 V	1A		50	μA
		"	20	GND	2.7 V	"	GND	"		"		"	"	"	"	"	"	1B		"	"
		"	21	"	GND	"	2.7 V	"		"		"	"	"	"	"	"	1C		"	"
		"	22	"	"	"	GND	2.7 V		"		"	"	"	"	"	"	1D		"	"
		"	23	"	"	"	"	GND		"		2.7 V	"	"	"	"	"	2A		"	"
		"	24	"	"	"	"	"		"		GND	2.7 V	"	"	"	"	2B		"	"
		"	25	"	"	"	"	"		"		"	GND	"	2.7 V	GND	"	2C		"	"
		"	26	"	"	"	"	"		"		"	"	"	GND	2.7 V	"	2D		"	"
	I_{IH2}	"	27	5.5 V	"	"	"	"		"		"	"	"	"	GND	"	1A		1	mA
		"	28	GND	5.5 V	"	"	"		"		"	"	"	"	"	"	1B		"	"
		"	29	"	GND	"	5.5 V	"		"		"	"	"	"	"	"	1C		"	"
		"	30	"	"	"	GND	5.5 V		"		"	"	"	"	"	"	1D		"	"
		"	31	"	"	"	"	GND		"		5.5 V	"	"	"	"	"	2A		"	"
		"	32	"	"	"	"	"		"		GND	5.5 V	"	"	"	"	2B		"	"
		"	33	"	"	"	"	"		"		"	GND	"	5.5 V	"	"	2C		"	"
		"	34	"	"	"	"	"		"		"	GND	"	GND	5.5 V	"	2D		"	"
	I_{IL}	3009	35	0.5 V	5.5 V	"	5.5 V	5.5 V		"		5.5 V	5.5 V	"	5.5 V	"	"	1A	-1	-2	"
		"	36	5.5 V	0.5 V	"	5.5 V	"		"		"	"	"	"	"	"	1B	"	"	"
		"	37	"	5.5 V	"	0.5 V	"		"		"	"	"	"	"	"	1C	"	"	"
		"	38	"	"	"	5.5 V	0.5 V		"		"	"	"	"	"	"	1D	"	"	"
		"	39	"	"	"	"	5.5 V		"		0.5 V	"	"	"	"	"	2A	"	"	"
		"	40	"	"	"	"	"		"		5.5 V	0.5 V	"	"	"	"	2B	"	"	"
		"	41	"	"	"	"	"		"		"	5.5 V	"	0.5 V	"	"	2C	"	"	"
		"	42	"	"	"	"	"		"		"	5.5 V	"	5.5 V	0.5 V	"	2D	"	"	"
	I_{OS}	3011	43	GND	GND	"	GND	GND	GND	"				"			"	1Y	-40	-100	"
		3011	44			"				"	GND	GND	GND	"	GND	GND	"	2Y	-40	-100 1/	"

See footnote at end of table.

TABLE III. Group A inspection for device type 06 - Continued.
Terminal conditions (pins not designated may be high ≥2.0 V, low ≤0.8 V, or open)

Subgroup	Symbol	MIL-STD-883 method	Cases A, 3,C,D Test no.	1 1A	2 1B	3 NC	4 1C	5 1D	6 1Y	7 GND	8 2Y	9 2A	10 2B	11 NC	12 2C	13 2D	14 V_{CC}	Measured terminal	Test limits Min	Test limits Max	Unit
1 T_C = 25°C	I_{CCH}	3005	45	GND	GND	GND	GND	GND		GND		GND	GND	GND	GND	GND	5.5 V	V_{CC}		8	mA
	I_{CCL}	3005	46	5.5 V	5.5 V	"	5.5 V	5.5 V		"		5.5 V	5.5 V	"	5.5 V	5.5 V	"	V_{CC}		18	mA
	I_{CEX}		47	GND	GND	"	GND	GND	5.5 V	"		5.5 V	5.5 V	"	5.5 V	5.5 V	"	1Y		250	µA
	I_{CEX}		48	5.5 V	5.5 V	"	5.5 V	5.5 V		"	5.5 V	GND	GND	"	GND	GND	"	2Y		250	µA
2	Same tests, terminal conditions, and limits as for subgroup 1, except T_C = 125°C and V_{IC} tests are omitted. V_{OL} (max) = 0.45 V and V_{IL} = 0.7 V.																				
3	Same tests, terminal conditions, and limits as for subgroup 1, except T_C = -55°C and V_{IC} tests are omitted.																				
9 T_C = 25°C	t_{PHL}	3003 Fig. 4	49	IN	2.7 V	GND	2.7 V	2.7 V	OUT	GND		2.7 V	2.7 V	GND	2.7 V	2.7 V	5.0 V	1A to 1Y	2.0	7.5	ns
		"	50	2.7 V	IN	"	2.7 V	"	"	"		"	"	"	"	"	"	1B to 1Y	"	"	"
		"	51	"	2.7 V	"	IN	"	"	"		"	"	"	"	"	"	1C to 1Y	"	"	"
		"	52	"	"	"	2.7 V	IN	"	"		"	"	"	"	"	"	1D to 1Y	"	"	"
		"	53	"	"	"	"	2.7 V		"	OUT	IN	"	"	"	"	"	2A to 2Y	"	"	"
		"	54	"	"	"	"	"		"	"	2.7 V	IN	"	"	"	"	2B to 2Y	"	"	"
		"	55	"	"	"	"	"		"	"	"	2.7 V	"	IN	"	"	2C to 2Y	"	"	"
		"	56	"	"	"	"	"		"	"	"	"	"	2.7 V	IN	"	2D to 2Y	"	"	"
	t_{PLH}	"	57	IN	"	"	"	"	OUT	"		"	"	"	"	2.7 V	"	1A to 1Y	"	7.0	"
		"	58	2.7 V	IN	"	"	"	"	"		"	"	"	"	"	"	1B to 1Y	"	"	"
		"	59	"	2.7 V	"	IN	"	"	"		"	"	"	"	"	"	1C to 1Y	"	"	"
		"	60	"	"	"	2.7 V	IN	"	"		"	"	"	"	"	"	1D to 1Y	"	"	"
		"	61	"	"	"	"	2.7 V		"	OUT	IN	"	"	"	"	"	2A to 2Y	"	"	"
		"	62	"	"	"	"	"		"	"	2.7 V	IN	"	"	"	"	2B to 2Y	"	"	"
		"	63	"	"	"	"	"		"	"	"	2.7 V	"	IN	"	"	2C to 2Y	"	"	"
		"	64	"	"	"	"	"		"	"	"	"	"	2.7 V	IN	"	2D to 2Y	"	"	"
10 T_C = 125°C	t_{PHL}	"	65	IN	"	"	"	"	OUT	"		"	"	"	"	2.7 V	"	1A to 1Y	"	9.0	"
		"	66	2.7 V	IN	"	"	"	"	"		"	"	"	"	"	"	1B to 1Y	"	"	"
		"	67	"	2.7 V	"	IN	"	"	"		"	"	"	"	"	"	1C to 1Y	"	"	"
		"	68	"	"	"	2.7 V	IN	"	"		"	"	"	"	"	"	1D to 1Y	"	"	"
		"	69	"	"	"	"	2.7 V		"	OUT	IN	"	"	"	"	"	2A to 2Y	"	"	"
		"	70	"	"	"	"	"		"	"	2.7 V	IN	"	"	"	"	2B to 2Y	"	"	"
		"	71	"	"	"	"	"		"	"	"	2.7 V	"	IN	"	"	2C to 2Y	"	"	"
		"	72	"	"	"	"	"		"	"	"	"	"	2.7 V	IN	"	2D to 2Y	"	"	"
	t_{PLH}	"	73	IN	"	"	"	"	OUT	"		"	"	"	"	2.7 V	"	1A to 1Y	"	"	"
		"	74	2.7 V	IN	"	"	"	"	"		"	"	"	"	"	"	1B to 1Y	"	"	"
		"	75	"	2.7 V	"	IN	"	"	"		"	"	"	"	"	"	1C to 1Y	"	"	"
		"	76	"	"	"	2.7 V	IN	"	"		"	"	"	"	"	"	1D to 1Y	"	"	"
		"	77	"	"	"	"	2.7 V		"	OUT	IN	"	"	"	"	"	2A to 2Y	"	"	"
		"	78	"	"	"	"	"		"	"	2.7 V	IN	"	"	"	"	2B to 2Y	"	"	"
		"	79	"	"	"	"	"		"	"	"	2.7 V	"	IN	"	"	2C to 2Y	"	"	"
		"	80	"	"	"	"	"		"	"	"	2.7 V	"	2.7 V	IN	"	2D to 2Y	"	"	"
11	Same tests, terminal conditions, and limits as for subgroup 10, except T_C = -55°C.																				

1/ For circuit C, I_{OS} maximum test limits = -110 mA.

TABLE III. Group A inspection for device type 07.
Terminal conditions (pins not designated may be high ≥2.0 V, low ≤0.8 V, or open)

Subgroup	Symbol	MIL-STD-883 method	Cases A, B,C,D Test no.	1 1A	2 1B	3 NC	4 1C	5 1D	6 1Y	7 GND	8 2Y	9 2A	10 2B	11 NC	12 2C	13 2D	14 V_{CC}	Measured terminal	Test limits Min	Test limits Max	Unit
1 T_C = 25°C	V_{OL}	3007	1	2.0 V	2.0 V	GND	2.0 V	2.0 V	20 mA	GND		GND	GND	GND	GND	GND	4.5 V	1Y	0.2	0.5	V
		3007	2	GND	GND	"	GND	GND		"	20 mA	2.0 V	2.0 V	"	2.0 V	2.0 V	"	2Y	0.2	0.5	V
	I_{CEX}		3	GND	5.5 V	"	5.5 V	5.5 V	5.5 V	"		5.5 V	5.5 V	"	5.5 V	5.5 V	"	1Y		250	μA
			4	5.5 V	GND	"	5.5 V	"	"	"		"	"	"	"	"	"	1Y		"	"
			5	"	5.5 V	"	GND	"	"	"		"	"	"	"	"	"	1Y		"	"
			6	"	"	"	5.5 V	GND	"	"		"	"	"	"	"	"	1Y		"	"
			7	"	"	"	"	5.5 V		"	5.5 V	GND	"	"	"	"	"	2Y		"	"
			8	"	"	"	"	"		"	"	5.5 V	GND	"	"	"	"	2Y		"	"
			9	"	"	"	"	"		"	"	"	5.5 V	"	GND	"	"	2Y		"	"
			10	"	"	"	"	"		"	"	"	5.5 V	"	5.5 V	GND	"	2Y		"	"
	V_{IC}		11	-18 mA		"				"				"			"	1A		-1.2	V
			12		-18 mA	"				"				"			"	1B		"	"
			13			"	-18 mA			"				"			"	1C		"	"
			14			"		-18 mA		"				"			"	1D		"	"
			15			"				"		-18 mA		"			"	2A		"	"
			16			"				"			-18 mA	"			"	2B		"	"
			17			"				"				"	-18 mA		"	2C		"	"
			18			"				"				"		-18 mA	"	2D		"	"
	I_{IH1}	3010	19	2.7 V	GND	"	GND	GND		"		GND	GND	"	GND	GND	5.5 V	1A		50	μA
		"	20	GND	2.7 V	"	GND	"		"		"	"	"	"	"	"	1B		"	"
		"	21	"	GND	"	2.7 V	"		"		"	"	"	"	"	"	1C		"	"
		"	22	"	"	"	GND	2.7 V		"		"	"	"	"	"	"	1D		"	"
		"	23	"	"	"	"	GND		"		2.7 V	"	"	"	"	"	2A		"	"
		"	24	"	"	"	"	"		"		GND	2.7 V	"	"	"	"	2B		"	"
		"	25	"	"	"	"	"		"		"	GND	"	2.7 V	"	"	2C		"	"
		"	26	"	"	"	"	"		"		"	"	"	GND	2.7 V	"	2D		"	"
	I_{IH2}	"	27	5.5 V	"	"	"	"		"		"	"	"	"	GND	"	1A		1	mA
		"	28	GND	5.5 V	"	"	"		"		"	"	"	"	"	"	1B		"	"
		"	29	"	GND	"	5.5 V	"		"		"	"	"	"	"	"	1C		"	"
		"	30	"	"	"	GND	5.5 V		"		"	"	"	"	"	"	1D		"	"
		"	31	"	"	"	"	GND		"		5.5 V	"	"	"	"	"	2A		"	"
		"	32	"	"	"	"	"		"		GND	5.5 V	"	"	"	"	2B		"	"
		"	33	"	"	"	"	"		"		"	GND	"	5.5 V	"	"	2C		"	"
		"	34	"	"	"	"	"		"		"	GND	"	GND	5.5 V	"	2D		"	"
	I_{IL}	3009	35	0.5 V	5.5 V	"	5.5 V	5.5 V		"		5.5 V	5.5 V	"	5.5 V	"	"	1A	-1	-2	"
		"	36	5.5 V	0.5 V	"	5.5 V	"		"		"	"	"	"	"	"	1B	"	"	"
		"	37	"	5.5 V	"	0.5 V	"		"		"	"	"	"	"	"	1C	"	"	"
		"	38	"	"	"	5.5 V	0.5 V		"		"	"	"	"	"	"	1D	"	"	"
		"	39	"	"	"	"	5.5 V		"		0.5 V	"	"	"	"	"	2A	"	"	"
		"	40	"	"	"	"	"		"		5.5 V	0.5 V	"	"	"	"	2B	"	"	"
		"	41	"	"	"	"	"		"		"	5.5 V	"	0.5 V	"	"	2C	"	"	"
		"	42	"	"	"	"	"		"		"	"	"	5.5 V	0.5 V	"	2D	"	"	"
	I_{CCL}	3005	43	"	"	"	"	"		"		"	"	"	5.5 V	5.5 V	"	V_{CC}		18	"
	I_{CCH}	3005	44	GND	GND	"	GND	GND		"		GND	GND	"	GND	GND	"	V_{CC}		6.6	"
2	Same tests, terminal conditions, and limits as for subgroup 1, except T_C = 125°C and V_{IC} tests are omitted. V_{OL} (max) = 0.45 V.																				
3	Same tests, terminal conditions, and limits as for subgroup 1, except T_C = -55°C and V_{IC} tests are omitted.																				

TABLE III. Group A inspection for device type 07 - Continued.
Terminal conditions (pins not designated may be high ≥2.0 V, low ≤0.8 V, or open)

Subgroup	Symbol	MIL-STD-883 method	Cases A, B,C,D Test no.	1 1A	2 1B	3 NC	4 1C	5 1D	6 1Y	7 GND	8 2Y	9 2A	10 2B	11 NC	12 2C	13 2D	14 V_{CC}	Measured terminal	Test limits Min	Test limits Max	Unit
9 T_C = 25°C	t_{PHL}	3003 Fig. 4	45	IN	2.7 V	GND	2.7 V	2.7 V	OUT	GND		2.7 V	2.7 V	GND	2.7 V	2.7 V	5.0 V	1A to 1Y	2.0	11.5	ns
		"	46	2.7 V	IN	"	2.7 V	"	"	"		"	"	"	"	"	"	1B to 1Y	"	"	"
		"	47	"	2.7 V	"	IN	"	"	"		"	"	"	"	"	"	1C to 1Y	"	"	"
		"	48	"	"	"	2.7 V	IN	"	"		"	"	"	"	"	"	1D to 1Y	"	"	"
		"	49	"	"	"	"	2.7 V		"	OUT	IN	"	"	"	"	"	2A to 2Y	"	"	"
		"	50	"	"	"	"	"		"	"	2.7 V	IN	"	"	"	"	2B to 2Y	"	"	"
		"	51	"	"	"	"	"		"	"	"	2.7 V	"	IN	"	"	2C to 2Y	"	"	"
		"	52	"	"	"	"	"		"	"	"	"	"	2.7 V	IN	"	2D to 2Y	"	"	"
	t_{PLH}	"	53	IN	"	"	"	"	OUT	"		"	"	"	"	2.7 V	"	1A to 1Y	"	12.0	"
		"	54	2.7 V	IN	"	"	"	"	"		"	"	"	"	"	"	1B to 1Y	"	"	"
		"	55	"	2.7 V	"	IN	"	"	"		"	"	"	"	"	"	1C to 1Y	"	"	"
		"	56	"	"	"	2.7 V	IN	"	"		"	"	"	"	"	"	1D to 1Y	"	"	"
		"	57	"	"	"	"	2.7 V		"	OUT	IN	"	"	"	"	"	2A to 2Y	"	"	"
		"	58	"	"	"	"	"		"	"	2.7 V	IN	"	"	"	"	2B to 2Y	"	"	"
		"	59	"	"	"	"	"		"	"	"	2.7 V	"	IN	"	"	2C to 2Y	"	"	"
		"	60	"	"	"	"	"		"	"	"	"	"	2.7 V	IN	"	2D to 2Y	"	"	"
10 T_C = 125°C	t_{PHL}	"	61	IN	"	"	"	"	OUT	"		"	"	"	"	2.7 V	"	1A to 1Y	"	14.0	"
		"	62	2.7 V	IN	"	"	"	"	"		"	"	"	"	"	"	1B to 1Y	"	"	"
		"	63	"	2.7 V	"	IN	"	"	"		"	"	"	"	"	"	1C to 1Y	"	"	"
		"	64	"	"	"	2.7 V	IN	"	"		"	"	"	"	"	"	1D to 1Y	"	"	"
		"	65	"	"	"	"	2.7 V		"	OUT	IN	"	"	"	"	"	2A to 2Y	"	"	"
		"	66	"	"	"	"	"		"	"	2.7 V	IN	"	"	"	"	2B to 2Y	"	"	"
		"	67	"	"	"	"	"		"	"	"	2.7 V	"	IN	"	"	2C to 2Y	"	"	"
		"	68	"	"	"	"	"		"	"	"	"	"	2.7 V	IN	"	2D to 2Y	"	"	"
	t_{PLH}	"	69	IN	"	"	"	"	OUT	"		"	"	"	"	2.7 V	"	1A to 1Y	"	"	"
		"	70	2.7 V	IN	"	"	"	"	"		"	"	"	"	"	"	1B to 1Y	"	"	"
		"	71	"	2.7 V	"	IN	"	"	"		"	"	"	"	"	"	1C to 1Y	"	"	"
		"	72	"	"	"	2.7 V	IN	"	"		"	"	"	"	"	"	1D to 1Y	"	"	"
		"	73	"	"	"	"	2.7 V		"	OUT	IN	"	"	"	"	"	2A to 2Y	"	"	"
		"	74	"	"	"	"	"		"	"	2.7 V	IN	"	"	"	"	2B to 2Y	"	"	"
		"	75	"	"	"	"	"		"	"	"	2.7 V	"	IN	"	"	2C to 2Y	"	"	"
		"	76	"	"	"	"	"		"	"	"	2.7 V	"	2.7 V	IN	"	2D to 2Y	"	"	"
11	Same tests, terminal conditions, and limits as for subgroup 10, except T_C = -55°C.																				

TABLE III. Group A inspection for device type 08.
Terminal conditions (pins not designated may be high ≥2.0 V, low ≤0.8 V, or open)

Subgroup	Symbol	MIL-STD-883 method	Cases A, B,C,D Test no.	1 A	2 B	3 C	4 D	5 E	6 F	7 GND	8 Y	9 NC	10 NC	11 G	12 H	13 NC	14 V_{CC}	Measured terminal	Test limits Min	Test limits Max	Unit
1 T_C = 25°C	V_{OH}	3006	1	0.8 V	5.5 V	5.5 V	5.5 V	5.5 V	5.5 V	GND	-1 mA	GND	GND	5.5 V	5.5 V	GND	4.5 V	Y	2.5		V
		"	2	5.5 V	0.8 V	5.5 V	"	"	"	"	"	"	"	"	"	"	"	"	"		"
		"	3	"	5.5 V	0.8 V	"	"	"	"	"	"	"	"	"	"	"	"	"		"
		"	4	"	"	5.5 V	0.8 V	"	"	"	"	"	"	"	"	"	"	"	"		"
		"	5	"	"	"	5.5 V	0.8 V	"	"	"	"	"	"	"	"	"	"	"		"
		"	6	"	"	"	"	5.5 V	0.8 V	"	"	"	"	"	"	"	"	"	"		"
		"	7	"	"	"	"	"	5.5 V	"	"	"	"	0.8 V	"	"	"	"	"		"
		"	8	"	"	"	"	"	5.5 V	"	"	"	"	5.5 V	0.8 V	"	"	"	"		"
	V_{OL}	3007	9	2.0 V	2.0 V	2.0 V	2.0 V	2.0 V	2.0 V	"	20 mA	"	"	2.0 V	2.0 V	"	"	"	0.2	0.5	"
	V_{IC}		10	-18 mA						"		"	"			"	"	A		-1.2	"
			11		-18 mA					"		"	"			"	"	B		"	"
			12			-18 mA				"		"	"			"	"	C		"	"
			13				-18 mA			"		"	"			"	"	D		"	"
			14					-18 mA		"		"	"			"	"	E		"	"
			15						-18 mA	"		"	"			"	"	F		"	"
			16							"		"	"	-18 mA		"	"	G		"	"
			17							"		"	"		-18 mA	"	"	H		"	"
	I_{IH1}	3010	18	2.7 V	GND	GND	GND	GND	GND	"		"	"	GND	GND	"	5.5 V	A		50	μA
		"	19	GND	2.7 V	GND	"	"	"	"		"	"	"	"	"	"	B		"	"
		"	20	"	GND	2.7 V	"	"	"	"		"	"	"	"	"	"	C		"	"
		"	21	"	"	GND	2.7 V	"	"	"		"	"	"	"	"	"	D		"	"
		"	22	"	"	"	GND	2.7 V	"	"		"	"	"	"	"	"	E		"	"
		"	23	"	"	"	"	GND	2.7 V	"		"	"	"	"	"	"	F		"	"
		"	24	"	"	"	"	"	GND	"		"	"	2.7 V	"	"	"	G		"	"
		"	25	"	"	"	"	"	"	"		"	"	GND	2.7 V	"	"	H		"	"
	I_{IH2}	"	25	5.5 V	"	"	"	"	"	"		"	"	"	GND	"	"	A		1	mA
		"	27	GND	5.5 V	"	"	"	"	"		"	"	"	"	"	"	B		"	"
		"	28	"	GND	5.5 V	"	"	"	"		"	"	"	"	"	"	C		"	"
		"	29	"	"	GND	5.5 V	"	"	"		"	"	"	"	"	"	D		"	"
		"	30	"	"	"	GND	5.5 V	"	"		"	"	"	"	"	"	E		"	"
		"	31	"	"	"	"	GND	5.5 V	"		"	"	"	"	"	"	F		"	"
		"	32	"	"	"	"	"	GND	"		"	"	5.5 V	"	"	"	G		"	"
		"	33	"	"	"	"	"	GND	"		"	"	GND	5.5 V	"	"	H		"	"
	I_{IL}	3009	34	0.5 V	5.5 V	5.5 V	5.5 V	5.5 V	5.5 V	"		"	"	5.5 V	"	"	"	A	-1	-2	"
		"	35	5.5 V	0.5 V	5.5 V	"	"	"	"		"	"	"	"	"	"	B	"	"	"
		"	36	"	5.5 V	0.5 V	"	"	"	"		"	"	"	"	"	"	C	"	"	"
		"	37	"	"	5.5 V	0.5 V	"	"	"		"	"	"	"	"	"	D	"	"	"
		"	38	"	"	"	5.5 V	0.5 V	"	"		"	"	"	"	"	"	E	"	"	"
		"	39	"	"	"	"	5.5 V	0.5 V	"		"	"	"	"	"	"	F	"	"	"
		"	40	"	"	"	"	"	5.5 V	"		"	"	0.5 V	"	"	"	G	"	"	"
		"	41	"	"	"	"	"	5.5 V	"		"	"	5.5 V	0.5 V	"	"	H	"	"	"
	I_{OS}	3011	42	GND	GND	GND	GND	GND	GND	"	GND	"	"	GND	GND	"	"	Y	-40	-100 1/	"
	I_{CCH}	3005	43	GND	GND	GND	GND	GND	GND	"		"	"	GND	GND	"	"	V_{CC}		5	"
	I_{CCL}	3005	44	5.5 V	5.5 V	5.5 V	5.5 V	5.5 V	5.5 V	"		"	"	5.5 V	5.5 V	"	"	V_{CC}		10	"
	I_{CEX}		45	GND	GND	GND	GND	GND	GND	"	5.5 V	"	"	GND	GND	"	"	Y		250	μA
2	Same tests, terminal conditions, and limits as for subgroup 1, except T_C = 125°C and V_{IC} tests are omitted. V_{OL} (max) = 0.45 V and V_{IL} = 0.7 V.																				
3	Same tests, terminal conditions, and limits as for subgroup 1, except T_C = -55°C and V_{IC} tests are omitted.																				

See footnote at end of table.

TABLE III. Group A inspection for device type 08 - Continued.
Terminal conditions (pins not designated may be high ≥2.0 V, low ≤0.8 V, or open)

Subgroup	Symbol	MIL-STD-883 method	Cases A, B,C,D Test no.	1 A	2 B	3 C	4 D	5 E	6 F	7 GND	8 Y	9 NC	10 NC	11 G	12 H	13 NC	14 V_{CC}	Measured terminal	Test Limits Min	Test Limits Max	Unit
9 T_C = 25°C	t_{PHL}	3003 Fig. 4	46	IN	2.7 V	2.7 V	2.7 V	2.7 V	2.7 V	GND	OUT	GND	GND	2.7 V	2.7 V	GND	5.0 V	A to Y	2.0	9.0	ns
		"	47	2.7 V	IN	2.7 V	"	"	"	"	"	"	"	"	"	"	"	B to Y	"	"	"
		"	48	"	2.7 V	IN	"	"	"	"	"	"	"	"	"	"	"	C to Y	"	"	"
		"	49	"	"	2.7 V	IN	"	"	"	"	"	"	"	"	"	"	D to Y	"	"	"
		"	50	"	"	"	2.7 V	IN	"	"	"	"	"	"	"	"	"	E to Y	"	"	"
		"	51	"	"	"	"	2.7 V	IN	"	"	"	"	"	"	"	"	F to Y	"	"	"
		"	52	"	"	"	"	"	2.7 V	"	"	"	"	IN	"	"	"	G to Y	"	"	"
		"	53	"	"	"	"	"	"	"	"	"	"	2.7 V	IN	"	"	H to Y	"	"	"
	t_{PLH}	"	54	IN	"	"	"	"	"	"	"	"	"	"	2.7 V	"	"	A to Y	"	7.5	"
		"	55	2.7 V	IN	"	"	"	"	"	"	"	"	"	"	"	"	B to Y	"	"	"
		"	56	"	2.7 V	IN	"	"	"	"	"	"	"	"	"	"	"	C to Y	"	"	"
		"	57	"	"	2.7 V	IN	"	"	"	"	"	"	"	"	"	"	D to Y	"	"	"
		"	58	"	"	"	2.7 V	IN	"	"	"	"	"	"	"	"	"	E to Y	"	"	"
		"	59	"	"	"	"	2.7 V	IN	"	"	"	"	"	"	"	"	F to Y	"	"	"
		"	60	"	"	"	"	"	2.7 V	"	"	"	"	IN	"	"	"	G to Y	"	"	"
		"	61	"	"	"	"	"	"	"	"	"	"	2.7 V	IN	"	"	H to Y	"	"	"
10 T_C = 125°C	t_{PHL}	"	62	IN	"	"	"	"	"	"	"	"	"	"	2.7 V	"	"	A to Y	"	10.0	"
		"	63	2.7 V	IN	"	"	"	"	"	"	"	"	"	"	"	"	B to Y	"	"	"
		"	64	"	2.7 V	IN	"	"	"	"	"	"	"	"	"	"	"	C to Y	"	"	"
		"	65	"	"	2.7V	IN	"	"	"	"	"	"	"	"	"	"	D to Y	"	"	"
		"	66	"	"	"	2.7 V	IN	"	"	"	"	"	"	"	"	"	E to Y	"	"	"
		"	67	"	"	"	"	2.7 V	IN	"	"	"	"	"	"	"	"	F to Y	"	"	"
		"	68	"	"	"	"	"	2.7 V	"	"	"	"	IN	"	"	"	G to Y	"	"	"
		"	69	"	"	"	"	"	"	"	"	"	"	2.7 V	IN	"	"	H to Y	"	"	"
	t_{PLH}	"	70	IN	"	"	"	"	"	"	"	"	"	"	2.7 V	"	"	A to Y	"	9.0	"
		"	71	2.7 V	IN	"	"	"	"	"	"	"	"	"	"	"	"	B to Y	"	"	"
		"	72	"	2.7 V	IN	"	"	"	"	"	"	"	"	"	"	"	C to Y	"	"	"
		"	73	"	"	2.7 V	IN	"	"	"	"	"	"	"	"	"	"	D to Y	"	"	"
		"	74	"	"	"	2.7 V	IN	"	"	"	"	"	"	"	"	"	E to Y	"	"	"
		"	75	"	"	"	"	2.7 V	IN	"	"	"	"	"	"	"	"	F to Y	"	"	"
		"	76	"	"	"	"	"	2.7 V	"	"	"	"	IN	"	"	"	G to Y	"	"	"
		"	77	"	"	"	"	"	2.7 V	"	"	"	"	2.7 V	IN	"	"	H to Y	"	"	"
11	Same tests, terminal conditions, and limits as for subgroup 10, except T_C = -55°C.																				

1/ For circuit C, I_{OS} maximum test limits = -110 mA.

TABLE III. Group A inspection for device type 09.
Terminal conditions (pins not designated may be high ≥2.0 V, low ≤0.8 V, or open)

Subgroup	Symbol	MIL-STD-883 method	Cases E,F Test no.	1 A	2 B	3 C	4 D	5 E	6 F	7 G	8 GND	9 Y	10 H	11 I	12 J	13 K	14 L	15 M	16 V_{CC}	Measured terminal	Test limits Min	Test limits Max	Unit
1 T_C = 25°C	V_{OH}	3006	1	0.8 V	5.5 V	5.5 V	5.5 V	5.5 V	5.5 V	5.5 V	GND	-1 mA	5.5 V	5.5 V	5.5 V	5.5 V	5.5 V	5.5 V	4.5 V	Y	2.5		V
		"	2	5.5 V	0.8 V	5.5 V	"	"	"	"	"	"	"	"	"	"	"	"	"	"	"		"
		"	3	"	5.5 V	0.8 V	"	"	"	"	"	"	"	"	"	"	"	"	"	"	"		"
		"	4	"	"	5.5 V	0.8 V	"	"	"	"	"	"	"	"	"	"	"	"	"	"		"
		"	5	"	"	"	5.5 V	0.8V	"	"	"	"	"	"	"	"	"	"	"	"	"		"
		"	6	"	"	"	"	5.5 V	0.8 V	"	"	"	"	"	"	"	"	"	"	"	"		"
		"	7	"	"	"	"	"	5.5 V	0.8 V	"	"	"	"	"	"	"	"	"	"	"		"
		"	8	"	"	"	"	"	"	5.5 V	"	"	0.8 V	"	"	"	"	"	"	"	"		"
		"	9	"	"	"	"	"	"	"	"	"	5.5 V	0.8 V	"	"	"	"	"	"	"		"
		"	10	"	"	"	"	"	"	"	"	"	"	5.5 V	0.8 V	"	"	"	"	"	"		"
		"	11	"	"	"	"	"	"	"	"	"	"	"	5.5 V	0.8 V	"	"	"	"	"		"
		"	12	"	"	"	"	"	"	"	"	"	"	"	"	5.5 V	0.8 V	"	"	"	"		"
		"	13	"	"	"	"	"	"	"	"	"	"	"	"	5.5 V	5.5 V	0.8 V	"	"	"		"
	V_{OL}	3007	14	2.0 V	2.0 V	2.0 V	2.0 V	2.0 V	2.0 V	2.0 V	"	20 mA	2.0 V	2.0 V	2.0 V	2.0 V	2.0 V	2.0 V	"	"	0.2	0.5	"
	V_{IC}		15	-18 mA							"								"	A		-1.2	"
			16		-18 mA						"								"	B		"	"
			17			-18 mA					"								"	C		"	"
			18				-18 mA				"								"	D		"	"
			19					-18 mA			"								"	E		"	"
			20						-18 mA		"								"	F		"	"
			21							-18 mA	"								"	G		"	"
			22								"		-18 mA						"	H		"	"
			23								"			-18 mA					"	I		"	"
			24								"				-18 mA				"	J		"	"
			25								"					-18 mA			"	K		"	"
			26								"						-18 mA		"	L		"	"
			27								"							-18 mA	"	M		"	"
	I_{IH1}	3010	28	2.7 V	GND	GND	GND	GND	GND	GND	"		GND	GND	GND	GND	GND	GND	5.5 V	A		50	μA
		"	29	GND	2.7 V	GND	"	"	"	"	"		"	"	"	"	"	"	"	B		"	"
		"	30	"	GND	2.7 V	"	"	"	"	"		"	"	"	"	"	"	"	C		"	"
		"	31	"	"	GND	2.7 V	"	"	"	"		"	"	"	"	"	"	"	D		"	"
		"	32	"	"	"	GND	2.7 V	"	"	"		"	"	"	"	"	"	"	E		"	"
		"	33	"	"	"	"	GND	2.7 V	"	"		"	"	"	"	"	"	"	F		"	"
		"	34	"	"	"	"	"	GND	2.7 V	"		"	"	"	"	"	"	"	G		"	"
		"	35	"	"	"	"	"	"	GND	"		2.7 V	"	"	"	"	"	"	H		"	"
		"	36	"	"	"	"	"	"	"	"		GND	2.7 V	"	"	"	"	"	I		"	"
		"	37	"	"	"	"	"	"	"	"		"	GND	2.7 V	"	"	"	"	J		"	"
		"	38	"	"	"	"	"	"	"	"		"	"	GND	2.7 V	"	"	"	K		"	"
		"	39	"	"	"	"	"	"	"	"		"	"	"	GND	2.7 V	"	"	L		"	"
		"	40	"	"	"	"	"	"	"	"		"	"	"	"	GND	2.7 V	"	M		"	"
	I_{IH2}	"	41	5.5 V	"	"	"	"	"	"	"		"	"	"	"	"	GND	"	A		1	mA
		"	42	GND	5.5 V	"	"	"	"	"	"		"	"	"	"	"	"	"	B		"	"
		"	43	"	GND	5.5 V	"	"	"	"	"		"	"	"	"	"	"	"	C		"	"
		"	44	"	"	GND	5.5 V	"	"	"	"		"	"	"	"	"	"	"	D		"	"
		"	45	"	"	"	GND	5.5 V	"	"	"		"	"	"	"	"	"	"	E		"	"
		"	46	"	"	"	"	GND	5.5 V	"	"		"	"	"	"	"	"	"	F		"	"
		"	47	"	"	"	"	"	GND	5.5 V	"		"	"	"	"	"	"	"	G		"	"
		"	48	"	"	"	"	"	"	GND	"		5.5 V	"	"	"	"	"	"	H		"	"
		"	49	"	"	"	"	"	"	"	"		GND	5.5 V	"	"	"	"	"	I		"	"
		"	50	"	"	"	"	"	"	"	"		"	GND	5.5 V	"	"	"	"	J		"	"
		"	51	"	"	"	"	"	"	"	"		"	"	GND	5.5 V	"	"	"	K		"	"
		"	52	"	"	"	"	"	"	"	"		"	"	"	GND	5.5 V	"	"	L		"	"
		"	53	"	"	"	"	"	"	"	"		"	"	"	"	GND	5.5 V	"	M		"	"

See footnote at end of table.

TABLE III. Group A inspection for device type 09 - Continued.
Terminal conditions (pins not designated may be high ≥2.0 V, low ≤0.8 V, or open)

Subgroup	Symbol	MIL-STD-883 method	Cases E,F Test no.	1 A	2 B	3 C	4 D	5 E	6 F	7 G	8 GND	9 Y	10 H	11 I	12 J	13 K	14 L	15 M	16 V_{CC}	Measured terminal	Test limits Min	Test limits Max	Unit
1 T_C = 25°C	I_{CEX}		54	GND	GND	GND	GND	GND	GND	GND	GND	5.5 V	GND	GND	GND	GND	GND	GND	5.5 V	Y		250	μA
	I_{IL}	3009	55	0.5 V	5.5 V	5.5 V	5.5 V	5.5 V	5.5 V	5.5 V	"		5.5 V	5.5 V	5.5 V	5.5 V	5.5 V	5.5 V	"	A	-1	-2	mA
		"	56	5.5 V	0.5 V	5.5 V	"			"	"		"	"	"	"	"	"	"	B	"	"	"
		"	57	"	5.5 V	0.5 V	"	"	"	"	"		"	"	"	"	"	"	"	C	"	"	"
		"	58	"	"	5.5 V	0.5 V	"	"	"	"		"	"	"	"	"	"	"	D	"	"	"
		"	59	"	"	"	5.5 V	0.5 V	"	"	"		"	"	"	"	"	"	"	E	"	"	"
		"	60	"	"	"	"	5.5 V	0.5 V	"	"		"	"	"	"	"	"	"	F	"	"	"
		"	61	"	"	"	"	"	5.5 V	0.5 V	"		"	"	"	"	"	"	"	G	"	"	"
		"	62	"	"	"	"	"	"	5.5 V	"		0.5 V	"	"	"	"	"	"	H	"	"	"
		"	63	"	"	"	"	"	"	"	"		5.5 V	0.5 V	"	"	"	"	"	I	"	"	"
		"	64	"	"	"	"	"	"	"	"		"	5.5 V	0.5 V	"	"	"	"	J	"	"	"
		"	65	"	"	"	"	"	"	"	"		"	"	5.5 V	0.5 V	"	"	"	K	"	"	"
		"	66	"	"	"	"	"	"	"	"		"	"	"	5.5 V	0.5 V	"	"	L	"	"	"
		"	67	"	"	"	"	"	"	"	"		"	"	"	5.5 V	5.5 V	0.5 V	"	M	"	"	"
	I_{OS}	3011	68	GND	GND	GND	GND	GND	GND	GND	"	GND	GND	GND	GND	GND	GND	GND	"	Y	-40	-100 1/	"
	I_{CCH}	3005	69	GND	GND	GND	GND	GND	GND	GND	"		GND	GND	GND	GND	GND	GND	"	V_{CC}		5	"
	I_{CCL}	3005	70	5.5 V	5.5 V	5.5 V	5.5 V	5.5 V	5.5 V	5.5 V	"		5.5 V	5.5 V	5.5 V	5.5 V	5.5 V	5.5 V	"	V_{CC}		10	"
2	Same tests, terminal conditions, and limits as for subgroup 1, except T_C = 125°C and V_{IC} tests are omitted. V_{OL} (max) = 0.45 V and V_{IL} = 0.7 V.																						
3	Same tests, terminal conditions, and limits as for subgroup 1, except T_C = -55°C and V_{IC} tests are omitted.																						
9 T_C = 25°C	t_{PHL}	3003 Fig. 4	71	IN	2.7 V	2.7 V	2.7 V	2.7 V	2.7 V	2.7 V	GND	OUT	2.7 V	2.7 V	2.7 V	2.7 V	2.7 V	2.7 V	5.0 V	A to Y	2.0	9.0	ns
		"	72	2.7 V	IN	2.7 V	"	"	"	"	"	"	"	"	"	"	"	"	"	B to Y	"	"	"
		"	73	"	2.7 V	IN	"	"	"	"	"	"	"	"	"	"	"	"	"	C to Y	"	"	"
		"	74	"	"	2.7 V	IN	"	"	"	"	"	"	"	"	"	"	"	"	D to Y	"	"	"
		"	75	"	"	"	2.7 V	IN	"	"	"	"	"	"	"	"	"	"	"	E to Y	"	"	"
		"	76	"	"	"	"	2.7 V	IN	"	"	"	"	"	"	"	"	"	"	F to Y	"	"	"
		"	77	"	"	"	"	"	2.7 V	IN	"	"	"	"	"	"	"	"	"	G to Y	"	"	"
		"	78	"	"	"	"	"	"	2.7 V	"	"	IN	"	"	"	"	"	"	H to Y	"	"	"
		"	79	"	"	"	"	"	"	"	"	"	2.7 V	IN	"	"	"	"	"	I to Y	"	"	"
		"	80	"	"	"	"	"	"	"	"	"	"	2.7 V	IN	"	"	"	"	J to Y	"	"	"
		"	81	"	"	"	"	"	"	"	"	"	"	"	2.7 V	IN	"	"	"	K to Y	"	"	"
		"	82	"	"	"	"	"	"	"	"	"	"	"	"	2.7 V	IN	"	"	L to Y	"	"	"
		"	83	"	"	"	"	"	"	"	"	"	"	"	"	"	2.7 V	IN	"	M to Y	"	"	"
	t_{PLH}	"	84	IN	"	"	"	"	"	"	"	"	"	"	"	"	"	"	"	A to Y	"	7.5	"
		"	85	2.7 V	IN	"	"	"	"	"	"	"	"	"	"	"	"	"	"	B to Y	"	"	"
		"	86	"	2.7 V	IN	"	"	"	"	"	"	"	"	"	"	"	"	"	C to Y	"	"	"
		"	87	"	"	2.7 V	IN	"	"	"	"	"	"	"	"	"	"	"	"	D to Y	"	"	"
		"	88	"	"	"	2.7 V	IN	"	"	"	"	"	"	"	"	"	"	"	E to Y	"	"	"
		"	89	"	"	"	"	2.7 V	IN	"	"	"	"	"	"	"	"	"	"	F to Y	"	"	"
		"	90	"	"	"	"	"	2.7 V	IN	"	"	"	"	"	"	"	"	"	G to Y	"	"	"
		"	91	"	"	"	"	"	"	2.7 V	"	"	IN	"	"	"	"	"	"	H to Y	"	"	"
		"	92	"	"	"	"	"	"	"	"	"	2.7 V	IN	"	"	"	"	"	I to Y	"	"	"
		"	93	"	"	"	"	"	"	"	"	"	"	2.7 V	IN	"	"	"	"	J to Y	"	"	"
		"	94	"	"	"	"	"	"	"	"	"	"	"	2.7 V	IN	"	"	"	K to Y	"	"	"
		"	95	"	"	"	"	"	"	"	"	"	"	"	"	2.7 V	IN	"	"	L to Y	"	"	"
		"	96	"	"	"	"	"	"	"	"	"	"	"	"	2.7 V	2.7 V	IN	"	M to Y	"	"	"

See footnote at end of table.

TABLE III. Group A inspection for device type 09 - Continued.
Terminal conditions (pins not designated may be high ≥2.0 V, low ≤0.8 V, or open)

Subgroup	Symbol	MIL-STD-883-method	Cases E,F Test no.	1 A	2 B	3 C	4 D	5 E	6 F	7 G	8 GND	9 Y	10 H	11 I	12 J	13 K	14 L	15 M	16 V_{CC}	Measured terminal	Test limits Min	Test limits Max	Unit
10 T_C = 125°C	t_{PHL}	3003 Fig. 4	97	IN	2.7 V	2.7 V	2.7 V	2.7 V	2.7 V	2.7 V	GND	OUT	2.7 V	2.7 V	2.7 V	2.7 V	2.7 V	2.7 V	5.0 V	A to Y	2.0	10.0	ns
			98	2.7 V	IN	2.7 V	"	"	"	"	"	"	"	"	"	"	"	"	"	B to Y	"	"	"
		"	99	"	2.7 V	IN	"	"	"	"	"	"	"	"	"	"	"	"	"	C to Y	"	"	"
		"	100	"	"	2.7 V	IN	"	"	"	"	"	"	"	"	"	"	"	"	D to Y	"	"	"
		"	101	"	"	"	2.7 V	IN	"	"	"	"	"	"	"	"	"	"	"	E to Y	"	"	"
		"	102	"	"	"	"	2.7 V	IN	"	"	"	"	"	"	"	"	"	"	F to Y	"	"	"
		"	103	"	"	"	"	"	2.7 V	IN	"	"	"	"	"	"	"	"	"	G to Y	"	"	"
		"	104	"	"	"	"	"	"	2.7 V	"	"	IN	"	"	"	"	"	"	H to Y	"	"	"
		"	105	"	"	"	"	"	"	"	"	"	2.7 V	IN	"	"	"	"	"	I to Y	"	"	"
		"	106	"	"	"	"	"	"	"	"	"	"	2.7 V	IN	"	"	"	"	J to Y	"	"	"
		"	107	"	"	"	"	"	"	"	"	"	"	"	2.7 V	IN	"	"	"	K to Y	"	"	"
		"	108	"	"	"	"	"	"	"	"	"	"	"	"	2.7 V	IN	"	"	L to Y	"	"	"
		"	109	"	"	"	"	"	"	"	"	"	"	"	"	"	2.7 V	IN	"	M to Y	"	"	"
	t_{PLH}	"	110	IN	"	"	"	"	"	"	"	"	"	"	"	"	"	"	"	A to Y	"	9.0	"
		"	111	2.7 V	IN	"	"	"	"	"	"	"	"	"	"	"	"	"	"	B to Y	"	"	"
		"	112	"	2.7 V	IN	"	"	"	"	"	"	"	"	"	"	"	"	"	C to Y	"	"	"
		"	113	"	"	2.7 V	IN	"	"	"	"	"	"	"	"	"	"	"	"	D to Y	"	"	"
		"	114	"	"	"	2.7 V	IN	"	"	"	"	"	"	"	"	"	"	"	E to Y	"	"	"
		"	115	"	"	"	"	2.7 V	IN	"	"	"	"	"	"	"	"	"	"	F to Y	"	"	"
		"	116	"	"	"	"	"	2.7 V	IN	"	"	"	"	"	"	"	"	"	G to Y	"	"	"
		"	117	"	"	"	"	"	"	2.7 V	"	"	IN	"	"	"	"	"	"	H to Y	"	"	"
		"	118	"	"	"	"	"	"	"	"	"	2.7 V	IN	"	"	"	"	"	I to Y	"	"	"
		"	119	"	"	"	"	"	"	"	"	"	"	2.7 V	IN	"	"	"	"	J to Y	"	"	"
		"	120	"	"	"	"	"	"	"	"	"	"	"	2.7 V	IN	"	"	"	K to Y	"	"	"
		"	121	"	"	"	"	"	"	"	"	"	"	"	"	2.7 V	IN	"	"	L to Y	"	"	"
		"	122	"	"	"	"	"	"	"	"	"	"	"	"	2.7 V	2.7 V	IN	"	M to Y	"	"	"
11	Same tests, terminal conditions, and limits as for subgroup 10, except T_C = -55°C.																						

1/ For circuit C, I_{OS} maximum test limits = -110 mA.

TABLE III. Group A inspection device type 10. 1/
Terminal conditions (pins not designated may be high ≥2.0 V, low ≤0.8 V, or open)

Subgroup	Symbol	MIL-STD-883 method	Cases E,F Test no.	1 A	2 B	3 C	4 D	5 E	6 F	7 G	8 GND	9 Y	10 H	11 I	12 J	13 K	14 L	15 OC	16 V_{CC}	Measured terminal	Test limits Min	Test limits Max	Unit
1 T_C = 25°C	V_{OH}	3006	1	0.8 V	5.5 V	5.5 V	5.5 V	5.5 V	5.5 V	5.5 V	GND	-2 mA	5.5 V	5.5 V	5.5 V	5.5 V	5.5 V	0.8 V	4.5 V	Y	2.4		V
		"	2	5.5 V	0.8 V	5.5 V	"	"	"	"	"	"	"	"	"	"	"	"	"	"	"		"
		"	3	"	5.5 V	0.8 V	"	"	"	"	"	"	"	"	"	"	"	"	"	"	"		"
		"	4	"	"	5.5 V	0.8 V	"	"	"	"	"	"	"	"	"	"	"	"	"	"		"
		"	5	"	"	"	5.5 V	0.8 V	"	"	"	"	"	"	"	"	"	"	"	"	"		"
		"	6	"	"	"	"	5.5 V	0.8 V	"	"	"	"	"	"	"	"	"	"	"	"		"
		"	7	"	"	"	"	"	5.5 V	0.8 V	"	"	"	"	"	"	"	"	"	"	"		"
		"	8	"	"	"	"	"	"	5.5 V	"	"	0.8 V	"	"	"	"	"	"	"	"		"
		"	9	"	"	"	"	"	"	"	"	"	5.5 V	0.8 V	"	"	"	"	"	"	"		"
		"	10	"	"	"	"	"	"	"	"	"	"	5.5 V	0.8 V	"	"	"	"	"	"		"
		"	11	"	"	"	"	"	"	"	"	"	"	"	5.5 V	0.8 V	"	"	"	"	"		"
		"	12	"	"	"	"	"	"	"	"	"	"	"	5.5 V	5.5 V	0.8 V	"	"	"	"		"
	V_{OL}	3007	13	2.0 V	2.0 V	2.0 V	2.0 V	2.0 V	2.0 V	2.0 V	"	20 mA	2.0 V	2.0 V	2.0 V	2.0 V	2.0 V	0.8 V	"	"	0.2	0.5	"
	V_{IC}		14	-18 mA							"								"	A		-1.2	"
			15		-18 mA						"								"	B		"	"
			16			-18 mA					"								"	C		"	"
			17				-18 mA				"								"	D		"	"
			18					-18 mA			"								"	E		"	"
			19						-18 mA		"								"	F		"	"
			20							-18 mA	"								"	G		"	"
			21								"		-18 mA						"	H		"	"
			22								"			-18 mA					"	I		"	"
			23								"				-18 mA				"	J		"	"
			24								"					-18 mA			"	K		"	"
			25								"						-18 mA		"	L		"	"
			26								"							-18 mA	"	OC		"	"
	I_{OFF1}		27	5.5 V	5.5 V	5.5 V	5.5 V	5.5 V	5.5 V	5.5 V	"	2.7 V	5.5 V	5.5 V	5.5 V	5.5 V	5.5 V	5.5 V	"	Y		50	μA
	I_{OFF2}		28	GND	GND	GND	GND	GND	GND	GND	"	0.5 V	GND	GND	GND	GND	5.5 V	"	"	Y		-50	"
	I_{IH1}	3010	29	2.7 V	GND	"	"	"	"	"	"		"	"	"	"	GND	"	5.5 V	A		50	"
		"	30	GND	2.7 V	"	"	"	"	"	"		"	"	"	"	"	"	"	B		"	"
		"	31	"	GND	2.7 V	"	"	"	"	"		"	"	"	"	"	"	"	C		"	"
		"	32	"	"	GND	2.7 V	"	"	"	"		"	"	"	"	"	"	"	D		"	"
		"	33	"	"	"	GND	2.7 V	"	"	"		"	"	"	"	"	"	"	E		"	"
		"	34	"	"	"	"	GND	2.7 V	"	"		"	"	"	"	"	"	"	F		"	"
		"	35	"	"	"	"	"	GND	2.7 V	"		"	"	"	"	"	"	"	G		"	"
		"	36	"	"	"	"	"	"	GND	"		2.7 V	"	"	"	"	"	"	H		"	"
		"	37	"	"	"	"	"	"	"	"		GND	2.7 V	"	"	"	"	"	I		"	"
		"	38	"	"	"	"	"	"	"	"		"	GND	2.7 V	"	"	"	"	J		"	"
		"	39	"	"	"	"	"	"	"	"		"	"	GND	2.7 V	"	"	"	K		"	"
		"	40	"	"	"	"	"	"	"	"		"	"	"	GND	2.7 V	"	"	L		"	"
		"	41	"	"	"	"	"	"	"	"		"	"	"	"	GND	2.7 V	"	OC		"	"
	I_{IH2}	"	42	5.5 V	"	"	"	"	"	"	"		"	"	"	"	"	"	"	A		1	mA
		"	43	GND	5.5 V	"	"	"	"	"	"		"	"	"	"	"	"	"	B		"	"
		"	44	"	GND	5.5 V	"	"	"	"	"		"	"	"	"	"	"	"	C		"	"
		"	45	"	"	GND	5.5 V	"	"	"	"		"	"	"	"	"	"	"	D		"	"
		"	46	"	"	"	GND	5.5 V	"	"	"		"	"	"	"	"	"	"	E		"	"
		"	47	"	"	"	"	GND	5.5 V	"	"		"	"	"	"	"	"	"	F		"	"
		"	48	"	"	"	"	"	GND	5.5 V	"		"	"	"	"	"	"	"	G		"	"
		"	49	"	"	"	"	"	"	GND	"		5.5 V	"	"	"	"	"	"	H		"	"
		"	50	"	"	"	"	"	"	"	"		GND	5.5 V	"	"	"	"	"	I		"	"
		"	51	"	"	"	"	"	"	"	"		"	GND	5.5 V	"	"	"	"	J		"	"
		"	52	"	"	"	"	"	"	"	"		"	"	GND	5.5 V	"	"	"	K		"	"
		"	53	"	"	"	"	"	"	"	"		"	"	"	GND	5.5 V	"	"	L		"	"
		"	54	"	"	"	"	"	"	"	"		"	"	"	GND	GND	5.5 V	"	OC		"	"

See footnote at end of table.

TABLE III. Group A inspection for device type 10 - Continued. 1/

Terminal conditions (pins not designated may be high ≥2.0 V, low ≤0.8 V, or open)

Subgroup	Symbol	MIL-STD-883-method	Cases E,F Test no.	1 A	2 B	3 C	4 D	5 E	6 F	7 G	8 GND	9 Y	10 H	11 I	12 J	13 K	14 L	15 OC	16 V_{CC}	Measured terminal	Test limits Min	Test limits Max	Unit
1 T_C = 25°C	I_{IL}	3009	55	0.5 V	5.5 V	5.5 V	5.5 V	5.5 V	5.5 V	5.5 V	GND		5.5 V	5.5 V	5.5 V	5.5 V	5.5 V	GND	5.5 V	A	-1	-2	mA
		"	56	5.5 V	0.5 V	5.5 V	"	"	"	"	"		"	"	"	"	"	"	"	B	"	"	"
		"	57	"	5.5 V	0.5 V	"	"	"	"	"		"	"	"	"	"	"	"	C	"	"	"
		"	58	"	"	5.5 V	0.5 V	"	"	"	"		"	"	"	"	"	"	"	D	"	"	"
		"	59	"	"	"	5.5 V	0.5 V	"	"	"		"	"	"	"	"	"	"	E	"	"	"
		"	60	"	"	"	"	5.5 V	0.5 V	"	"		"	"	"	"	"	"	"	F	"	"	"
		"	61	"	"	"	"	"	5.5 V	0.5 V	"		"	"	"	"	"	"	"	G	"	"	"
		"	62	"	"	"	"	"	"	5.5 V	"		0.5 V	"	"	"	"	"	"	H	"	"	"
		"	63	"	"	"	"	"	"	"	"		5.5 V	0.5 V	"	"	"	"	"	I	"	"	"
		"	64	"	"	"	"	"	"	"	"		"	5.5 V	0.5 V	"	"	"	"	J	"	"	"
		"	65	"	"	"	"	"	"	"	"		"	"	5.5 V	0.5 V	"	"	"	K	"	"	"
		"	66	"	"	"	"	"	"	"	"		"	"	"	5.5 V	0.5 V	"	"	L	"	"	"
			67	"	"	"	"	"	"	"	"		"	"	"	5.5 V	5.5 V	0.5 V	"	OC	"	"	"
	I_{OS}	3011	68	GND	GND	GND	GND	GND	GND	GND	"	GND	GND	GND	GND	GND	GND	GND	"	Y	-40	-100 2/	"
	I_{CCH}	3005	69	GND	GND	GND	GND	GND	GND	GND	"		GND	GND	GND	GND	GND	GND	"	V_{CC}		13	"
	I_{CCL}	3005	70	5.5 V	5.5 V	5.5 V	5.5 V	5.5 V	5.5 V	5.5 V	"		5.5 V	5.5 V	5.5 V	5.5 V	5.5 V	GND	"	V_{CC}		16	"
	I_{CCO}	3005	71	5.5 V	5.5 V	5.5 V	5.5 V	5.5 V	5.5 V	5.5 V	"		5.5 V	5.5 V	5.5 V	5.5 V	5.5 V	5.5 V	"	V_{CC}		25	"
	I_{CEX}		72	GND	GND	GND	GND	GND	GND	GND	"	5.5 V	GND	GND	GND	GND	GND	GND	"	Y		250	μA
2	Same tests, terminal conditions, and limits as for subgroup 1, except T_C = 125°C and V_{IC} tests are omitted. V_{OL} (max) = 0.45 V and V_{IL} = 0.7 V.																						
3	Same tests, terminal conditions, and limits as for subgroup 1, except T_C = -55°C and V_{IC} tests are omitted.																						
9 T_C = 25°C	t_{PHL}	3003 Fig. 5	73	IN	2.7 V	2.7 V	2.7 V	2.7 V	2.7 V	2.7 V	GND	OUT	2.7 V	2.7 V	2.7 V	2.7 V	2.7 V	GND	5.0 V	A to Y	2.0	9.5	ns
			74	2.7 V	IN	2.7 V	"	"	"	"	"	"	"	"	"	"	"	"	"	B to Y	"	"	"
		"	75	"	2.7 V	IN	"	"	"	"	"	"	"	"	"	"	"	"	"	C to Y	"	"	"
		"	76	"	"	2.7 V	IN	"	"	"	"	"	"	"	"	"	"	"	"	D to Y	"	"	"
		"	77	"	"	"	2.7 V	IN	"	"	"	"	"	"	"	"	"	"	"	E to Y	"	"	"
		"	78	"	"	"	"	2.7 V	IN	"	"	"	"	"	"	"	"	"	"	F to Y	"	"	"
		"	79	"	"	"	"	"	2.7 V	IN	"	"	"	"	"	"	"	"	"	G to Y	"	"	"
		"	80	"	"	"	"	"	"	2.7 V	"	"	IN	"	"	"	"	"	"	H to Y	"	"	"
		"	81	"	"	"	"	"	"	"	"	"	2.7 V	IN	"	"	"	"	"	I to Y	"	"	"
		"	82	"	"	"	"	"	"	"	"	"	"	2.7 V	IN	"	"	"	"	J to Y	"	"	"
		"	83	"	"	"	"	"	"	"	"	"	"	"	2.7 V	IN	"	"	"	K to Y	"	"	"
		"	84	"	"	"	"	"	"	"	"	"	"	"	"	2.7 V	IN	"	"	L to Y	"	"	"
	t_{PLH}	"	85	IN	"	"	"	"	"	"	"	"	"	"	"	"	2.7 V	"	"	A to Y	"	7.5	"
		"	86	2.7 V	IN	"	"	"	"	"	"	"	"	"	"	"	"	"	"	B to Y	"	"	"
		"	87	"	2.7 V	IN	"	"	"	"	"	"	"	"	"	"	"	"	"	C to Y	"	"	"
		"	88	"	"	2.7 V	IN	"	"	"	"	"	"	"	"	"	"	"	"	D to Y	"	"	"
		"	89	"	"	"	2.7 V	IN	"	"	"	"	"	"	"	"	"	"	"	E to Y	"	"	"
		"	90	"	"	"	"	2.7 V	IN	"	"	"	"	"	"	"	"	"	"	F to Y	"	"	"
		"	91	"	"	"	"	"	2.7 V	IN	"	"	"	"	"	"	"	"	"	G to Y	"	"	"
		"	92	"	"	"	"	"	"	2.7 V	"	"	IN	"	"	"	"	"	"	H to Y	"	"	"
		"	93	"	"	"	"	"	"	"	"	"	2.7 V	IN	"	"	"	"	"	I to Y	"	"	"
		"	94	"	"	"	"	"	"	"	"	"	"	2.7 V	IN	"	"	"	"	J to Y	"	"	"
		"	95	"	"	"	"	"	"	"	"	"	"	"	2.7 V	IN	"	"	"	K to Y	"	"	"
		"	96	"	"	"	"	"	"	"	"	"	"	"	2.7 V	2.7 V	IN	"	"	L to Y	"	"	"

See footnote at end of table.

TABLE III. Group A inspection for device type 10 - Continued. 1/
Terminal conditions (pins not designated may be high ≥2.0 V, low ≤0.8 V, or open)

Subgroup	Symbol	MIL-STD-883 method	Cases E,F Test no.	1 A	2 B	3 C	4 D	5 E	6 F	7 G	8 GND	9 Y	10 H	11 I	12 J	13 K	14 L	15 OC	16 V_{CC}	Measured terminal	Test limits Min	Test limits Max	Unit
9 T_C = 25°C	t_{ZH}	3003 Fig. 5	97	GND	GND	GND	GND	GND	GND	GND	GND	OUT	GND	GND	GND	GND	GND	IN	5.0 V	OC to Y	2.0	19.5	ns
	t_{HZ}	"	98	GND	GND	GND	GND	GND	GND	GND	"	"	GND	GND	GND	GND	GND	"	"	OC to Y	"	8.5	"
	t_{ZL}	"	99	5.0 V	5.0 V	5.0 V	5.0 V	5.0 V	5.0 V	5.0 V	"	"	5.0 V	5.0 V	5.0 V	5.0 V	5.0 V	"	"	OC to Y	"	21.0	"
	t_{LZ}	"	100	5.0 V	5.0 V	5.0 V	5.0 V	5.0 V	5.0 V	5.0 V	"	"	5.0 V	5.0 V	5.0 V	5.0 V	5.0 V	"	"	OC to Y	"	14.0	"
10 T_C = 125°C	t_{PHL}	"	101	IN	2.7 V	2.7 V	2.7 V	2.7 V	2.7 V	2.7 V	"	"	2.7 V	2.7 V	2.7 V	2.7 V	2.7 V	GND	5.0 V	A to Y	"	10.5	"
		"	102	2.7 V	IN	2.7 V	"	"	"	"	"	"	"	"	"	"	"	"	"	B to Y	"	"	"
		"	103	"	2.7 V	IN	"	"	"	"	"	"	"	"	"	"	"	"	"	C to Y	"	"	"
		"	104	"	"	2.7 V	IN	"	"	"	"	"	"	"	"	"	"	"	"	D to Y	"	"	"
		"	105	"	"	"	2.7 V	IN	"	"	"	"	"	"	"	"	"	"	"	E to Y	"	"	"
		"	106	"	"	"	"	2.7 V	IN	"	"	"	"	"	"	"	"	"	"	F to Y	"	"	"
		"	107	"	"	"	"	"	2.7 V	IN	"	"	"	"	"	"	"	"	"	G to Y	"	"	"
		"	108	"	"	"	"	"	"	2.7 V	"	"	IN	"	"	"	"	"	"	H to Y	"	"	"
		"	109	"	"	"	"	"	"	"	"	"	2.7 V	IN	"	"	"	"	"	I to Y	"	"	"
		"	110	"	"	"	"	"	"	"	"	"	"	2.7 V	IN	"	"	"	"	J to Y	"	"	"
		"	111	"	"	"	"	"	"	"	"	"	"	"	2.7 V	IN	"	"	"	K to Y	"	"	"
		"	112	"	"	"	"	"	"	"	"	"	"	"	"	2.7 V	IN	"	"	L to Y	"	"	"
	t_{PLH}	"	113	IN	"	"	"	"	"	"	"	"	"	"	"	"	2.7 V	"	"	A to Y	"	9.0	"
		"	114	2.7 V	IN	"	"	"	"	"	"	"	"	"	"	"	"	"	"	B to Y	"	"	"
		"	115	"	2.7 V	IN	"	"	"	"	"	"	"	"	"	"	"	"	"	C to Y	"	"	"
		"	116	"	"	2.7 V	IN	"	"	"	"	"	"	"	"	"	"	"	"	D to Y	"	"	"
		"	117	"	"	"	2.7 V	IN	"	"	"	"	"	"	"	"	"	"	"	E to Y	"	"	"
		"	118	"	"	"	"	2.7 V	IN	"	"	"	"	"	"	"	"	"	"	F to Y	"	"	"
		"	119	"	"	"	"	"	2.7 V	IN	"	"	"	"	"	"	"	"	"	G to Y	"	"	"
		"	120	"	"	"	"	"	"	2.7 V	"	"	IN	"	"	"	"	"	"	H to Y	"	"	"
		"	121	"	"	"	"	"	"	"	"	"	2.7 V	IN	"	"	"	"	"	I to Y	"	"	"
		"	122	"	"	"	"	"	"	"	"	"	"	2.7 V	IN	"	"	"	"	J to Y	"	"	"
		"	123	"	"	"	"	"	"	"	"	"	"	"	2.7 V	IN	"	"	"	K to Y	"	"	"
		"	124	"	"	"	"	"	"	"	"	"	"	"	2.7 V	2.7 V	IN	"	"	L to Y	"	"	"
	t_{ZH}	"	125	GND	GND	GND	GND	GND	GND	GND	"	"	GND	GND	GND	GND	GND	IN	"	OC to Y	"	25.0	"
	t_{HZ}	"	126	GND	GND	GND	GND	GND	GND	GND	"	"	GND	GND	GND	GND	GND	"	"	OC to Y	"	11.0	"
	t_{ZL}	"	127	5.0 V	5.0 V	5.0 V	5.0 V	5.0 V	5.0 V	5.0 V	"	"	5.0 V	5.0 V	5.0 V	5.0 V	5.0 V	"	"	OC to Y	"	26.0	"
	t_{LZ}	"	128	5.0 V	5.0 V	5.0 V	5.0 V	5.0 V	5.0 V	5.0 V	"	"	5.0 V	5.0 V	5.0 V	5.0 V	5.0 V	"	"	OC to Y	"	17.0	"
11	Same tests, terminal conditions, and limits as for subgroup 10, except T_C = -55°C.																						

1/ Qualification requirements removed for this device type.

2/ For circuit C, I_{OS} maximum test limits = -110 mA.

3.8 Manufacturer eligibility. To be eligible to supply microcircuits to this specification, a manufacturer shall have a manufacturer certification in accordance with MIL-M-38510 for at least one line, not necessarily the line producing the device type described herein. This shall apply only for device type 10.

3.9 Certification. Certification in accordance with MIL-M-38510 is not required for device type 10.

4. QUALITY ASSURANCE PROVISIONS

4.1 Sampling and inspection. Sampling and inspection procedures shall be in accordance with MIL-M-38510 and methods 5005 and 5007, as applicable, of MIL-STD-883, except as modified herein.

4.2 Screening. Screening shall be in accordance with method 5004 of MIL-STD-883, and shall be conducted on device types 01, 02, 03, 04, 05, 06, 07, 08, and 09 prior to qualification and quality conformance inspections, and on device type 10, prior to quality conformance inspection only. The following additional criteria shall apply:

a. Burn-in test (method 1015 of MIL-STD-883).

(1) Test condition D or E, using the circuit shown on figure 3, or equivalent.

(2) T_A = 125°C minimum.

b. Interim and final electrical test parameters shall be as specified in table II, except interim electrical parameters test prior to burn-in is optional at the discretion of the manufacturer.

c. The percent defective allowable (PDA) shall be as specified in MIL-M-38510.

4.3 Qualification inspection. Qualification inspection shall be in accordance with MIL-M-38510. Inspections to be performed shall be those specified in method 5005 of MIL-STD-883 and herein for groups A, B, C, and D inspections (see 4.4.1 through 4.4.4). Qualification inspection is not required for device type 10.

4.4 Quality conformance inspection. Quality conformance inspection shall be in accordance with MIL-M-35810. Inspections to be performed shall be those specified in method 5005 of MIL-STD-883 and herein for groups A, B, C, and D inspections (see 4.4.1 through 4.4.4). Generic test data (see 6.5) may be used to satisfy the requirements for groups C and D inspection. Quality conformance inspection shall be completed on the specific devices covered by this specification before they are shipped.

4.4.1 Group A inspection. Group A inspection shall be in accordance with table I of method 5005 of MIL-STD-883 and as follows:

a. Tests shall be as specified in table II herein.

b. Subgroups 4, 5, 6, 7, and 8 of table I of method 5005 of MIL-STD-883 shall be omitted.

4.4.2 Group B inspection. Group B inspection shall be in accordance with table II of method 5005 of MIL-STD-883. Electrical tests requirements for device types 01, 02, 03, 04, 05, 06, 07, 08, and 09 shall be as specified in table II herein.

4.4.3 Group C inspection. Group C inspection shall be in accordance with table III of method 5005 of MIL-STD-883 and as follows:

a. End-point electrical parameters shall be as specified in table II herein.

b. Subgroups 3 and 4 shall be added to the group C inspection requirements for class B devices and shall consist of the tests, conditions, and limits specified for subgroups 10 and 11 of group A.

c. Steady state life test (method 1005 of MIL-STD-883) conditions, or equivalent:

(1) Test condition D or E, using the circuit shown on figure 3, or equivalent.

(2) T_A = 125°C minimum.

(3) Test duration: 1,000 hours, except as permitted by method 1005 of MIL-STD-883.

4.4.4 Group D inspection. Group D inspection shall be in accordance with table IV of method 5005 of MIL-STD-883. End-point electrical parameters shall be as specified in table II herein.

4.5 Methods of inspection. Methods of inspection shall be as follows:

4.5.1 Voltage and current. All voltages given are referenced to the microcircuit ground terminal. Currents given are conventional and positive when flowing into the referenced terminal.

5. PACKAGING

5.1 Packaging requirements. The requirements for packaging shall be in accordance with MIL-M-38510.

6. NOTES

6.1 Intended use. Microcircuits conforming to this specification are intended for Government microcircuit application (original equipment) and logistic purposes. Device type 10 is intended only for use for logistic support of existing equipment.

6.2 Ordering data. The acquisition document should specify the following:

a. Complete part number (see 1.2).

b. Requirements for delivery of one copy of the quality conformance inspection data pertinent to the device inspection lot to be supplied with each shipment by the device manufacturer, if applicable.

c. Requirements for certificate of compliance, if applicable.

d. Requirements for notification of change of product or process to the contracting activity for device type 10. In addition to that, notification to the qualifying activity, for device types 01, 02, 03, 04, 05, 06, 07, 08, and 09, if applicable.

e. For device types 01, 02, 03, 04, 05, 06, 07, 08, and 09, requirements for failure analysis (including required test condition of method 5003 of MIL-STD-883), corrective action, and reporting of results, if applicable.

f. *Requirements for product assurance options, device types* 01, 02, 03, 04, 05, 06, 07, 08, and 09. Requirements for packaging and packing, device type 10.

g. Requirements for special carriers, lead lengths, or lead forming, if applicable. Unless otherwise specified, these requirements will not apply to direct purchase by or direct shipment to the Government.

h. Requirements for "JAN" marking. This will apply to device types 01 through 09, only.

6.3 Abbreviations, symbols, and definitions. The abbreviations, symbols, and definitions used herein are defined in MIL-M-38510, MIL-STD-1331, and as follows:

GND - - - - - - - - - - - - - Ground zero voltage potential.

I_{IN} - - - - - - - - - - - - - *Current flowing into input terminal.*

t_{HZ} - - - - - - - - - - - - - Output disable time (of a three-state output) from high level. The time between the specified reference points on the input and output voltage waveforms with the three-state output changing from the defined high level to a high-impedance (off) state.

t_{LZ} - - - - - - - - - - - - - Output disable time (of a three-state output) from low level. The time between the specified reference points on the input and output voltage waveforms with the three-state output changing from the defined low level to a high-impedance (off) state.

t_{ZH} - - - - - - - - - - - - - Output enable time (of a three-state output) to high level. The time between the specified reference points on the input and output voltage waveforms with the three-state output changing from a high-impedance (off) state to the defined high level.

t_{ZL} - - - - - - - - - - - - - Output enable time (of a three-state output) to low level. The time between the specified reference points on the input and output voltage waveforms with the three-state output changing from a high-impedance (off) state to the defined low level.

V_{IN} - - - - - - - - - - - - - Voltage level at an input terminal.

6.4 Logistic support. Lead materials and finishes (see 3.3) are interchangeable. Unless otherwise specified, microcircuits acquired for Government logistic support will be acquired to device class B (see 1.2.2) and lead finish C (see 3.3). Longer lead lengths and lead forming shall not affect the part number.

6.5 Generic test data. This applies only to device type 10. Generic test data may be used to satisfy the requirements of 4.4.3. Group C generic test data will be on date codes no more than one year old and on a die in the same microcircuit group (see appendix E of MIL-M-38510) with the same material, design and process and from the same plant as the die represented. Group D (see 4.4.3) generic data will be on date codes no more than one year old and on the same package type (see terms, definitions, and symbols of MIL-M-38510) and from the same plant as the package represented. The vendor is required to retain the generic data for a period of not less than 36 months from the date of shipment.

6.6 Substitutability. The cross-reference information below is presented for the convenience of users. Microcircuits covered by this specification will functionally replace the listed generic-industry type. Generic-industry microcircuit types may not have equivalent operational performance characteristics across military temperature ranges or reliability factors equivalent to MIL-M-38510 device types and may have slight physical variations in relation to case size. The presence of this information shall not be deemed as permitting substitution of generic-industry types for MIL-M-38510 types or as a waiver of any of the provisions of MIL-M-38510.

Military device type	Generic-industry type
01	54S00
02	54S03
03	54S04
04	54S05
05	54S10
06	54S20
07	54S22
08	54S30
09	54S133
10 1/	54S134 1/

1/ Qualification requirements removed for this device type.

6.7 Manufacturers' designations. Manufacturers' circuits included in this specification are designated as shown in table IV.

TABLE IV. Manufacturers' designations. 1/

Device type	Manufacturer			
	Circuit A	Circuit B	Circuit C	Circuit D
	Texas Instruments	Fairchild	Signetics	National Semiconductor
01	X	X	X	X
02	X	X	X	
03	X	X	X	X
04	X	X	X	
05	X	X	X	X
06	X	X	X	X
07	X	X	X	
08	X	X	X	
09	X	X	X	X

1/ An "X" indicates the manufacturer has submitted a schematic for the indicated device type.

6.8 Ordering guidance. Since the qualification and certification requirements have been removed from the specification for device type 10, orders may be placed immediately.

6.9 Changes from previous issue. Asterisks are not used in this revision to identify changes with respect to the previous issue, due to the extensiveness of the changes.

Custodians:
Army - ER
Navy - EC
Air Force - 17

Review activities:
Army - AR, MI
Navy - OS, SH, TD
Air Force - 11, 19, 85, 99
DLA - ES

User activities:
Army - SM
Navy - AS, CG, MC

Preparing activity:
Air Force - 17

Agent:
DLA - ES

(Project 5962-0890-1)