MILITARY SPECIFICATION

MICROCIRCUITS, DIGITAL, SCHOTTKY TTL, FLIP-FLOPS, MONOLITHIC SILICON

This specification is approved for use by all Departments and Agencies of the Department of Defense.

1. SCOPE

1.1 Scope. This specification covers the detail requirements for monolithic silicon, Schottky TTL, bistable logic microcircuits. Two product assurance classes and a choice of case outlines and lead finishes are provided and are reflected in the complete part number.

1.2 Part number. The part number shall be in accordance with MIL-M-38510, and as specified herein.

1.2.1 Device type. The device type shall be as follows:

Device type	Circuit
01	Dual, D-type edge-triggered flip-flop
02	Dual, J-K edge-triggered flip-flop
03	Dual, J-K edge-triggered flip-flop, no clear
04	Dual, J-K edge-triggered flip-flop, common clear and clock
05	Hex, D-type edge-triggered flip-flop
06	Quad, D-type edge-triggered flip-flop

1.2.2 Device class. The device class shall be the product assurance level as defined in MIL-M-38510.

1.2.3 Case outline. The case outline shall be designated as follows:

Outline letter	Case outline (see MIL-M-38510, appendix C)
A	F-1 (14-lead 1/4" x 1/4"), flat package
B	F-3 (14-lead 3/16" x 1/4"), flat package
C	D-1 (14-lead 1/4" x 3/4"), dual-in-line package
D	F-2 (14-lead 1/4" x 3/8"), flat package
E	D-2 (16-lead 1/4" x 7/8"), dual-in-line package
F	F-5 (16-lead 1/4" x 3/8"), flat package

1.3 Absolute maximum ratings.

Supply voltage range- - - - - - - - - - - - -	-0.5 V dc to +7.0 V dc
Input voltage range - - - - - - - - - - - - -	-1.2 V dc at -18 mA to 5.5 V dc
Storage temperature range - - - - - - - - - -	-65°C to +150°C
Maximum power dissipation per flip-flop, (P_D)	
Device types 01, 02, 03, 04 - - - - - - - -	137 mW dc 1/
Device type 05- - - - - - - - - - - - - - -	132 mW dc 1/
Device type 06- - - - - - - - - - - - - - -	129 mW dc 1/
Lead temperature (soldering, 10 seconds)- -	+300°C
Thermal resistance, junction-to-case (θ_{JC}):	
Cases A, B, C, D, E and F - - - - - - - - -	(See appendix C of MIL-M-38510)
Junction temperature (T_J) 2/- - - - - - - - -	+175°C

1/ Must withstand the added P_D due to the short circuit test (e.g., I_{OS}).
2/ The maximum junction temperature shall not be exceeded except for allowable short duration burn-in screening conditions per method 5004 of MIL-STD-883.

Beneficial comments (recommendations, additions, deletions) and any pertinent data which may be of use in improving this document should be addressed to: Commander, Rome Air Development Center (RBE-2), Griffiss AFB, NY 13441 by using the self-addressed Standardization Document Improvement Proposal (DD Form 1426) appearing at the end of this document or by letter.

1.4 Recommended operating conditions.

Supply voltage (V_{CC})- - - - - - - - - - - - -	4.5 V dc minimum to 5.5 V dc maximum
Minimum high-level input voltage (V_{IH})- - -	2.0 V dc
Maximum low-level input voltage (V_{IL}) - - -	0.8 V dc 3/
(See figure 5 for individual device type input-setup time and input-hold time.)	
Case operating temperature range (T_C) - - -	-55°C to +125°C

2. APPLICABLE DOCUMENTS

2.1 Government specifications and standards. Unless otherwise specified, the following specifications and standards, of the issue listed in that issue of the Department of Defense Index of Specifications and Standards specified in the solicitation, form a part of this specification to the extent specified herein.

SPECIFICATION

MILITARY

MIL-M-38510 - Microcircuits, General Specification for.

STANDARD

MILITARY

MIL-STD-883 - Test Methods and Procedures for Microelectronics.

(Copies of specifications, standards, handbooks, drawings, and publications required by manufacturers in connection with specific acquisition functions should be obtained from the contracting activity or as directed by the contracting officer.)

2.2 Order of precedence. In the event of a conflict between the text of this specification and the references cited herein, the text of this specification shall take precedence.

3. REQUIREMENTS

3.1 Detail specification. The individual item requirements shall be in accordance with MIL-M-38510, and as specified herein.

3.2 Design, construction, and physical dimensions. The design, construction, and physical dimensions shall be as specified in MIL-M-38510 and herein.

3.2.1 Logic diagrams. The logic diagrams shall be as specified on figure 1.

3.2.2 Terminal connections. Terminal connections shall be as specified on figure 2.

3.2.3 Truth tables. The truth tables shall be as specified on figure 3.

3.2.4 Schematic circuits. The schematic circuits shall be submitted to the preparing activity prior to inclusion of a manufacturer's device in this specification and shall be submitted to the qualifying activity as a prerequisite for qualification. All qualified manufacturers' schematics shall be maintained and available upon request.

3.2.5 Case outlines. The case outlines shall be as specified in 1.2.3.

3.3 Lead material and finish. The lead material and finish shall be in accordance with MIL-M-38510 and 6.4 herein.

3/ V_{IL} = 0.7 V at +125°C.

TABLE I. Electrical performance characteristics.

Test	Symbol	Conditions 1/ $-55^{\circ}C \leq T_C \leq +125^{\circ}C$	Device type	Limits Min	Limits Max	Unit
High-level output voltage	V_{OH}	V_{CC} = 4.5 V; I_{OH} = -1 mA T_C = +125°C; V_{IL} = 0.7 V	All	2.5	---	V
Low-level output voltage	V_{OL}	V_{CC} = 4.5 V; I_{OL} = 20 mA	All		0.5 2/	V
Input clamp voltage	V_{IC}	V_{CC} = 4.5 V; I_{IN} = -18 mA; T_C = 25°C	All		-1.2	V
Low-level input current at D input	I_{IL1}	V_{CC} = 5.5 V; V_{IN} = 0.5 V	01	-1	-2	mA
Low-level input current at clear input	I_{IL2}	V_{CC} = 5.5 V; V_{IN} = 0.5 V	01	-3.0	-6.0	mA
Low-level input current at preset input	I_{IL3}	V_{CC} = 5.5 V; V_{IN} = 0.5 V	01	-2.0	-4.0	mA
Low-level input current at clock input	I_{IL4}	V_{CC} = 5.5 V; V_{IN} = 0.5 V	01,02,03	-2.0	-4.0	mA
Low-level input current at J or K inputs	I_{IL1}	V_{CC} = 5.5 V; V_{IN} = 0.5 V	02,03,04	-0.7	-1.6	mA
Low-level input current at clear input	I_{IL2}	V_{CC} = 5.5 V; V_{IN} = 0.5 V	02	-3.5	-7.0	mA
Low-level input current at clear input	I_{IL2}	V_{CC} = 5.5 V; V_{IN} = 0.5 V	04	-7.0	-14.0	mA
Low-level input current at preset input	I_{IL3}	V_{CC} = 5.5 V; V_{IN} = 0.5 V	02,03,04	-0.8	-6.0	mA
Low-level input current at clock input	I_{IL4}	V_{CC} = 5.5 V; V_{IN} = 0.5 V	04	-4.4	-8.0	mA
Low-level input current, all inputs	I_{IL1}	V_{CC} = 5.5 V; V_{IN} = 0.5 V	05, 06	-1	-2	mA
High-level input current at J, K, or D inputs	I_{IH1}	V_{CC} = 5.5 V; V_{IN} = 2.7 V	01, 02, 03, 04		50	µA
High-level input current at clear input	I_{IH2}		01		150	µA

See footnotes at end of table.

TABLE I. Electrical performance characteristics - Continued.

Test	Symbol	Conditions 1/ $-55^{\circ}C \leq T_C \leq +125^{\circ}C$	Device type	Limits Min	Limits Max	Unit
High-level input current at preset input	I_{IH3}	V_{CC} = 5.5 V; V_{IN} = 2.7 V	01, 02, 03, 04		100	μA
High-level input current at clock input	I_{IH4}		01,02,03		100	μA
High-level input current, all inputs	I_{IH5}	V_{CC} = 5.5 V; V_{IN} = 5.5 V	All		1.0	mA
High-level input current, all inputs	I_{IH1}	V_{CC} = 5.5 V; V_{IN} = 2.7 V	05, 06		50	μA
High-level input current at clear input	I_{IH2}		02		100	μA
High-level input current at clear input	I_{IH2}		04		200	μA
High-level input current at clock input	I_{IH4}		04		200	μA
Short-circuit output current	I_{OS}	V_{CC} = 5.5 V 3/	All	-40	-110	mA
Supply current	I_{CC}	V_{CC} = 5.5 V 4/	01, 02, 03, 04		50	mA
		V_{CC} = 5.5 V 5/	05		144	mA
		V_{CC} = 5.5 V 5/	06		96	mA
Maximum collector cutoff current	I_{CEX}	V_{CC} = 5.5 V; V_{OH} = 5.5 V V_{IH} = 5.5 V; V_{IL} = GND	All		250	μA
Maximum clock frequency	f_{MAX}	V_{CC} = 5.0 V; R_L = 280 Ω; C_L = 50 pF	01	55		MHz
Propagation delay time, low-to-high level, preset or clear to Q or $\overline{Q}$	t_{PLH1}			2	10	ns
Propagation delay time, low-to-high level, clock to Q or $\overline{Q}$	t_{PLH2}			2	13.0	ns

See footnotes at end of table.

TABLE I. Electrical performance characteristics - Continued.

Test	Symbol	Conditions 1/ $-55°C \leq T_C \leq +125°C$	Device type	Limits Min	Limits Max	Unit
Propagation delay time, high-to-low level, clock to Q or $\overline{Q}$	t_{PHL2}	V_{CC} = 5.0 V; R_L = 280 Ω; C_L = 50 pF	01	2	13.0	ns
Propagation delay time, high-to-low level, preset or clear to Q or $\overline{Q}$. Clock high	t_{PHL3}			2	19.0	ns
Propagation delay time, high-to-low level, preset or clear to Q or $\overline{Q}$. Clock low	t_{PHL4}			2	12.5	ns
Maximum clock frequency	f_{MAX}	V_{CC} = 5.0 V; R_L = 280 Ω; C_L = 50 pF	02	60		MHz
Propagation delay time, low-to-high level, preset or clear to Q or $\overline{Q}$	t_{PLH1}			2	11.0	ns
Propagation delay time, low-to-high level, clock to Q $\overline{Q}$	t_{PLH2}			2	11.0	ns
Propagation delay time, high-to-low level, clock to Q or $\overline{Q}$	t_{PHL2}			2	11.0	ns
Propagation delay time, high-to-low level, preset or clear to Q or $\overline{Q}$. Clock high	t_{PHL3}			2	11.0	ns
Maximum clock frequency	f_{MAX}	V_{CC} = 5.0 V; R_L = 280 Ω; C_L = 50 pF	03	60		MHz
Propagation delay time, low-to-high level, preset to Q	t_{PLH1}			2	11.0	ns
Propagation delay time, high-to-low level, preset to $\overline{Q}$	t_{PHL1}			2	11.0	ns
Propagation delay time, low-to-high level, clock to Q	t_{PLH2}			2	11.0	ns
Propagation delay time, high-to-low level, clock to $\overline{Q}$	t_{PHL2}			2	11.0	ns

See footnotes at end of table.

TABLE I. Electrical performance characteristics - Continued.

Test	Symbol	Conditions 1/ $-55°C \leq T_C \leq +125°C$	Device type	Limits Min	Limits Max	Unit
Propagation delay time, low-to-high level, clock to $\overline{Q}$	t_{PLH3}	V_{CC} = 5.0 V; R_L = 280 Ω; C_L = 50 pF	03	2	11.0	ns
Propagation delay time, high-to-low level, clock to Q	t_{PHL3}			2	11.0	ns
Maximum clock frequency	f_{MAX}	V_{CC} = 5.0 V; R_L = 280 Ω; C_L = 50 pF	04	60 6/		MHz
Propagation delay time, low-to-high level, preset or clear to Q or $\overline{Q}$	t_{PLH1}			2	11.0	ns
Propagation delay time, high-to-low level, clock to Q or $\overline{Q}$	t_{PHL2}			2	11.0	ns
Propagation delay time, low-to-high level, clock to Q or $\overline{Q}$	t_{PLH2}			2	11.0	ns
Propagation delay time, high-to-low level, preset or clear to Q or $\overline{Q}$. Clock high	t_{PHL3}			2	11.0	ns
Maximum clock frequency	f_{MAX}	V_{CC} = 5.0 V; R_L = 280 Ω; C_L = 50 pF	05	55 5/		MHz
Propagation delay time, low-to-high level, clock to Q	t_{PLH1}			2.0	17.0	ns
Propagation delay time, high-to-low level, clock to Q	t_{PHL1}			2.0	23.0	ns
Propagation delay time, low-to-high level, clock to Q, clear inactive	t_{PLH2}			2.0	17.0	ns
Propagation delay time, high-to-low level, clear to Q	t_{PHL2}			2.0	29.0	ns

See footnotes at end of table.

TABLE I. Electrical performance characteristics - Continued.

Test	Symbol	Conditions 1/ $-55°C \leq T_C \leq +125°C$	Device type	Limits Min	Limits Max	Unit
Maximum clock frequency	f_{MAX}	V_{CC} = 5.0 V; R_L = 280 Ω; C_L = 50 pF	06	55 5/		MHz
Propagation delay time, low-to-high level, clock to Q or $\overline{Q}$	t_{PLH1}			2.0	17.0	ns
Propagation delay time, high-to-low level, clock to Q or $\overline{Q}$	t_{PHL1}			2.0	23.0	ns
Propagation delay time, low-to-high level, clock to Q, clear inactive	t_{PLH2}			2.0	17.0	ns
Propagation delay time, high-to-low level, clear to Q.	t_{PHL2}			2.0	29.0	ns
Propagation delay time, low-to-high level, clear to Q.	t_{PLH3}			2.0	20.0	ns
Propagation delay time, high-to-low level, clock to Q, clear inactive	t_{PHL3}			2.0	23.0	ns

1/ Complete terminal conditions shall be as specified in table III.

2/ At T_C = +125°C, maximum = 0.45 V.

3/ Not more than one output should be shorted at a time, duration of short circuit not to exceed 5 seconds.

4/ With all outputs open, I_{CC} is measured with the Q and $\overline{Q}$ outputs high in turn. At the time of the measurement, the clock input is grounded.

5/ With all outputs open and 5.5 applied to all data and clear inputs, I_{CC} is measured after a momentary ground, then 5.5 V is applied to clock.

6/ f_{MAX}, minimum limit specified is the frequency of the input pulse. The output frequency shall be one-half of the input frequency.

3.4 Electrical performance characteristics. Unless otherwise specified, the electrical performance characteristics are as specified in table I, and apply over the full recommended case operating temperature range.

3.5 Electrical test requirements. The electrical test requirements for each device class shall be the subgroups specified in table II. The electrical tests for each subgroup are described in table III.

3.6 Marking. Marking shall be in accordance with MIL-M-38510.

3.7 Microcircuit group assignment. The devices covered by this specification shall be in microcircuit group number 10 (see MIL-M-38510, appendix E).

TABLE II. Electrical test requirements.

MIL-STD-883 test requirements	Subgroups (see table III)	
	Class S devices	Class B devices
Interim electrical parameters (pre burn-in) (method 5004)	1	1
Final electrical test parameters (method 5004)	1*,2,3, 7,9,10,11	1*,2,3, 7,9
Group A test requirements (method 5005)	1,2,3,7, 8,9,10,11	1,2,3,7, 8,9
Group B test requirements (method 5005) subgroup 5	1,2,3,7, 8,9,10,11	N/A
Group C end-point electrical parameters (method 5005)	N/A	1, 2, 3
Additional electrical subgroups for group C periodic inspections	N/A	10, 11
Group D end-point electrical parameters (method 5005)	1, 2, 3	1, 2, 3

*PDA applies to subgroup 1 (see 4.2c).

4. QUALITY ASSURANCE PROVISIONS

4.1 Sampling and inspection. Sampling and inspection procedures shall be in accordance with MIL-M-38510 and method 5005 and 5007, as applicable, of MIL-STD-883, except as modified herein.

4.2 Screening. Screening shall be in accordance with method 5004 of MIL-STD-883, and shall be conducted on all devices prior to qualification and quality conformance inspection. The following additional criteria shall apply:

a. Burn-in test (method 1015 of MIL-STD-883).

(1) Test condition D, using the circuit shown on figure 4, or equivalent.

(2) T_A = +125°C, minimum.

b. Interim and final electrical tests shall be as specified in table II, except interim electrical tests prior to burn-in is optional at the discretion of the manufacturer.

c. The percent defective allowable (PDA) shall be as specified in MIL-M-38510.

Device type 01

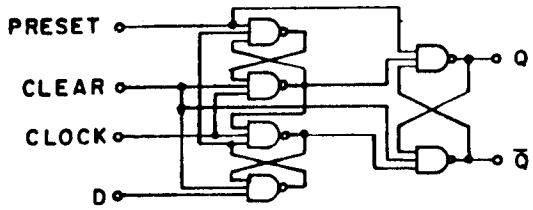

Device type 02

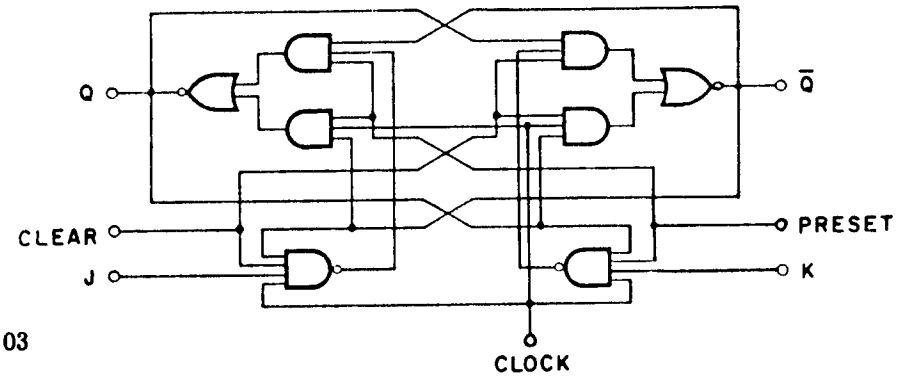

Device type 03

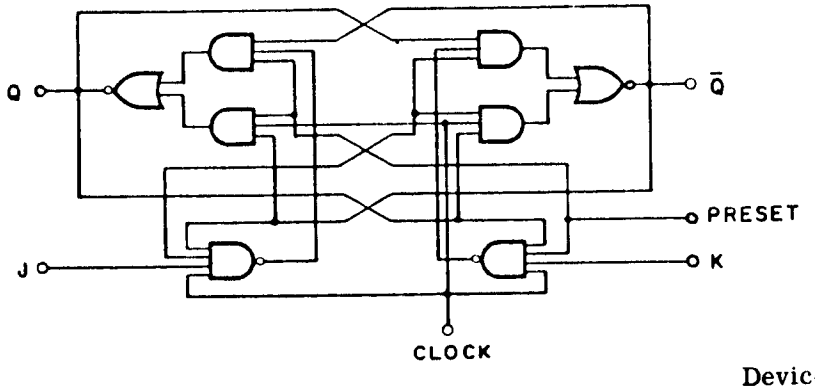

Device type 04

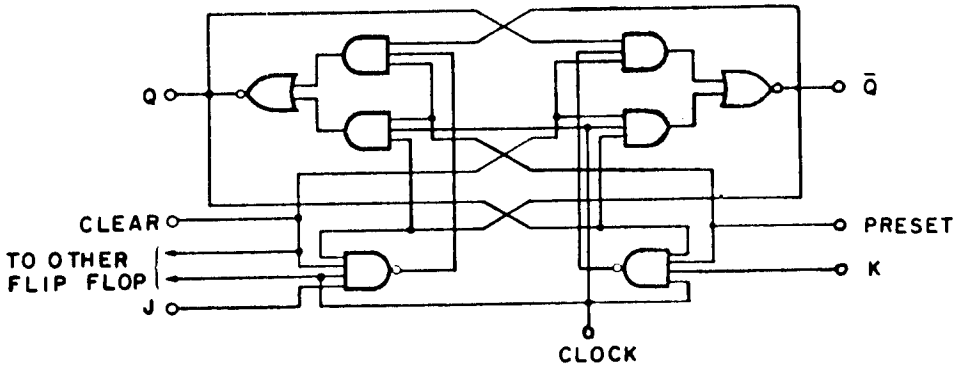

FIGURE 1. Logic diagrams.

Device type 05

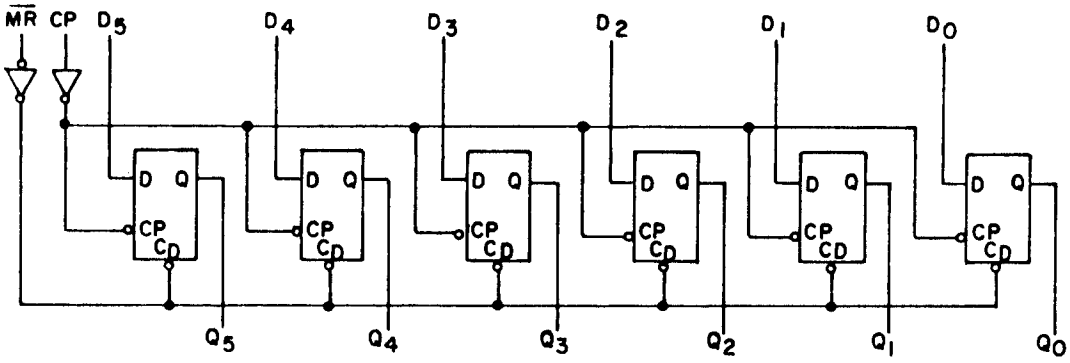

Device type 06

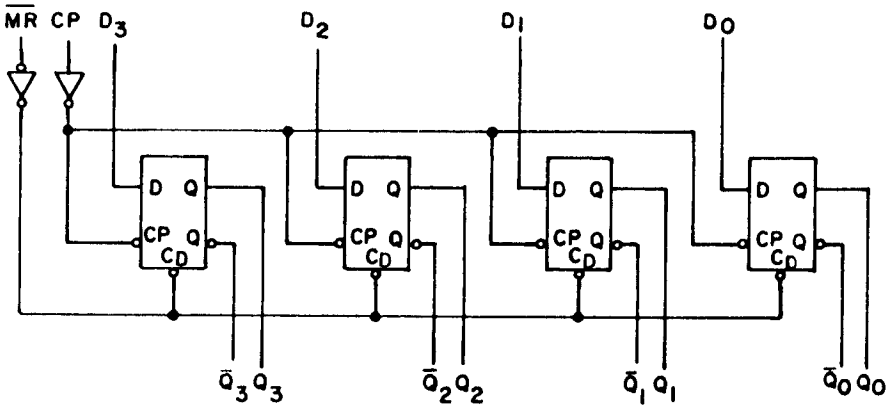

FIGURE 1. Logic diagrams - Continued.

Device type 01

Cases A,B,C,D

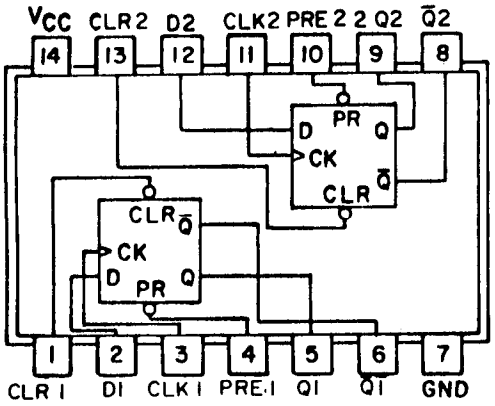

Device type 02

Cases E, F

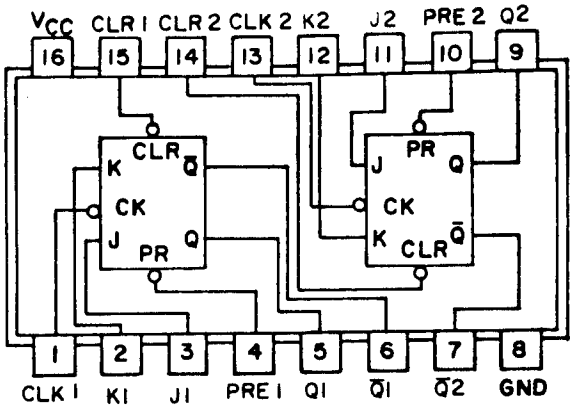

Device type 03

Cases A,B,C,D

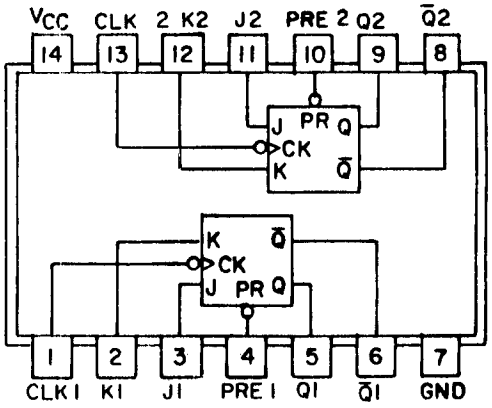

Device type 04

Cases A,B,C,D

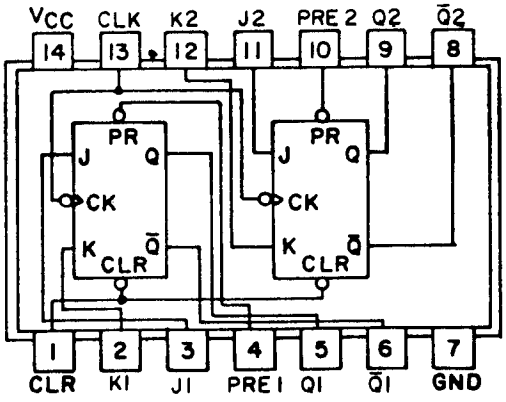

Device type 05

Cases E, F

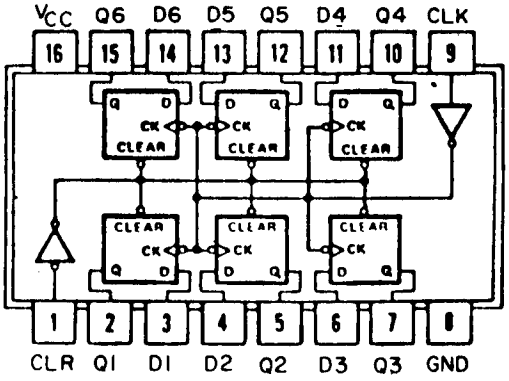

Device type 06

Cases E, F

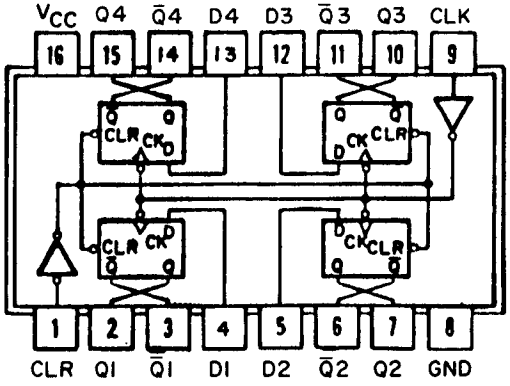

FIGURE 2. Terminal connections.

Device type 01

INPUTS				OUTPUTS	
PRESET	CLEAR	CLOCK	D	Q	$\bar{Q}$
L	H	X	X	H	L
H	L	X	X	L	H
L	L	X	X	H*	H*
H	H	↑	H	H	L
H	H	↑	L	L	H
H	H	L	X	Q_0	$\bar{Q}_0$

Device type 02

INPUTS					OUTPUTS	
PRESET	CLEAR	CLOCK	J	K	Q	$\bar{Q}$
L	H	X	X	X	H	L
H	L	X	X	X	L	H
L	L	X	X	X	H*	H*
H	H	↓	L	L	Q_0	$\bar{Q}_0$
H	H	↓	H	L	H	L
H	H	↓	L	H	L	H
H	H	↓	H	H	TOGGLE	
H	H	H	X	X	Q_0	$\bar{Q}_0$

Device type 03

INPUTS				OUTPUTS	
PRESET	CLOCK	J	K	Q	$\bar{Q}$
L	X	X	X	H	L
H	↓	L	L	Q_0	$\bar{Q}_0$
H	↓	H	L	H	L
H	↓	L	H	L	H
H	↓	H	H	TOGGLE	
H	H	X	X	Q_0	$\bar{Q}_0$

Device type 04

INPUTS					OUTPUTS	
PRESET	CLEAR	CLOCK	J	K	Q	$\bar{Q}$
L	H	X	X	X	H	L
H	L	X	X	X	L	H
L	L	X	X	X	H*	H*
H	H	↓	L	L	Q_0	$\bar{Q}_0$
H	H	↓	H	L	H	L
H	H	↓	L	H	L	H
H	H	↓	H	H	TOGGLE	
H	H	H	X	X	Q_0	$\bar{Q}_0$

H = high level (steady state).
L = low level (steady state).
X = irrelevant.
↑ = transition from low to high level.
↓ = transition from high to low level.
Q_0 = the level of Q before the indicated input conditions were established.
TOGGLE: Each output changes to the complement of its previous level on each active transition (pulse) of the clock.
*This configuration is nonstable; that is, it will not persist when preset and clear inputs return to their inactive (high) level.

Device types 05 and 06

(EACH FLIP-FLOP)

INPUTS			OUTPUTS	
CLEAR	CLOCK	D	Q	$\bar{Q}$†
L	X	X	L	H
H	↑	H	H	L
H	↑	L	L	H
H	L	X	Q_0	$\bar{Q}_0$

† = device type 06 only.

FIGURE 3. Truth tables.

Device type 01

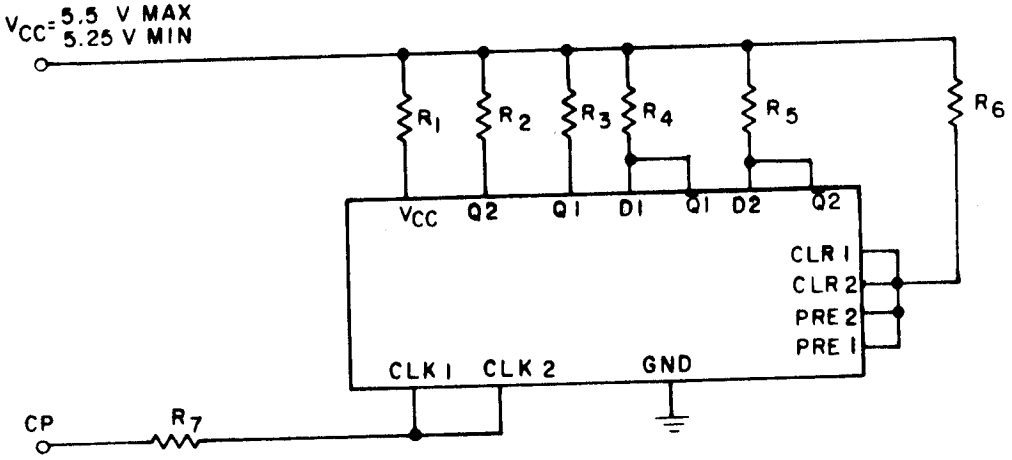

Notes:
1. R_1 = 10Ω ±5%.
2. R_2 through R_5 = 220Ω ±5%.
3. R_6 = R_7 = 27Ω ±5%.
4. CP = 100 kHz ±50% square wave; duty cycle = 50 ±15%;
   V_{IL} = -0.5 V minimum to +0.8 maximum;
   V_{IH} = 2.0 V minimum to 5.5 V maximum.

FIGURE 4. Burn-in and life-test circuits.

Device type 02

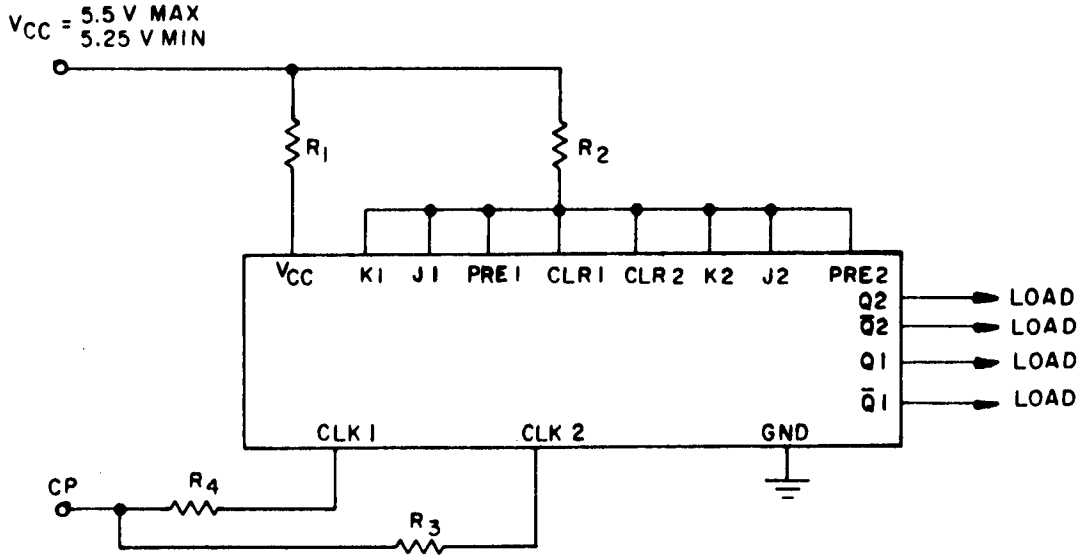

LOAD CKT (EACH OUTPUT)

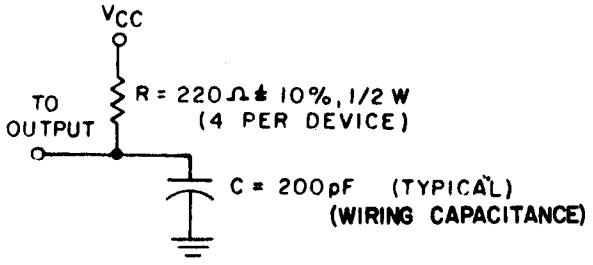

Notes:
1. R_1 = 4.99Ω ±1%, 3 W.
2. R_2 = 270Ω ±5%, 1/4 W.
3. R_4 = R_3 = 27Ω ±5%, 1/4 W.
4. CP = 100 kHz ±50% square wave; duty cycle = 50 ±15%;
   V_{IL} = -0.5 V minimum to +0.8 maximum;
   V_{IH} = 2.0 V minimum to 5.5 V maximum.

FIGURE 4. Burn-in and life-test circuits - Continued.

Device type 03

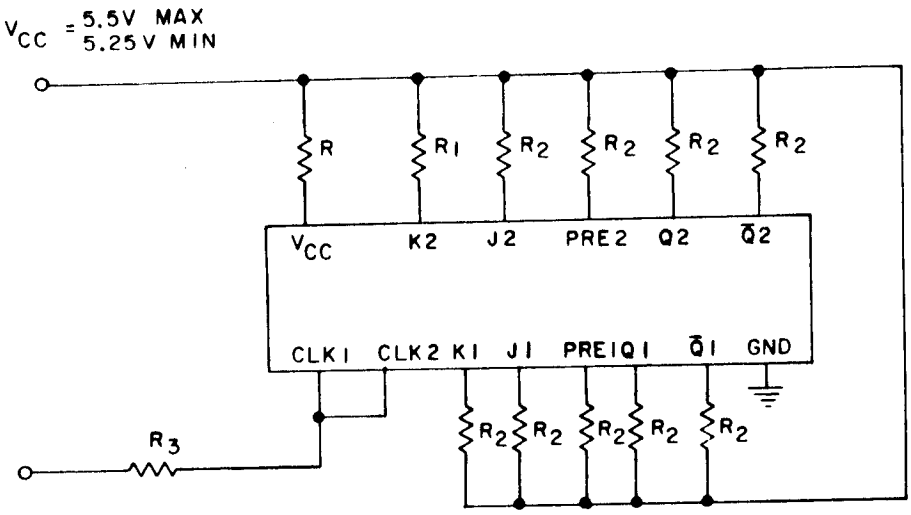

Notes:
1. R_1 = 10Ω ±5%.
2. R_2 = 220Ω ±5%.
3. R_3 = 27Ω ±5%.
4. CP = 100 kHz ±50% square wave; duty cycle = 50 ±15%;
   V_{IL} = -0.5 V minimum to +0.8 maximum;
   V_{IH} = 2.0 V minimum to 5.5 V maximum.

FIGURE 4. Burn-in and life-test circuits - Continued.

Device type 04

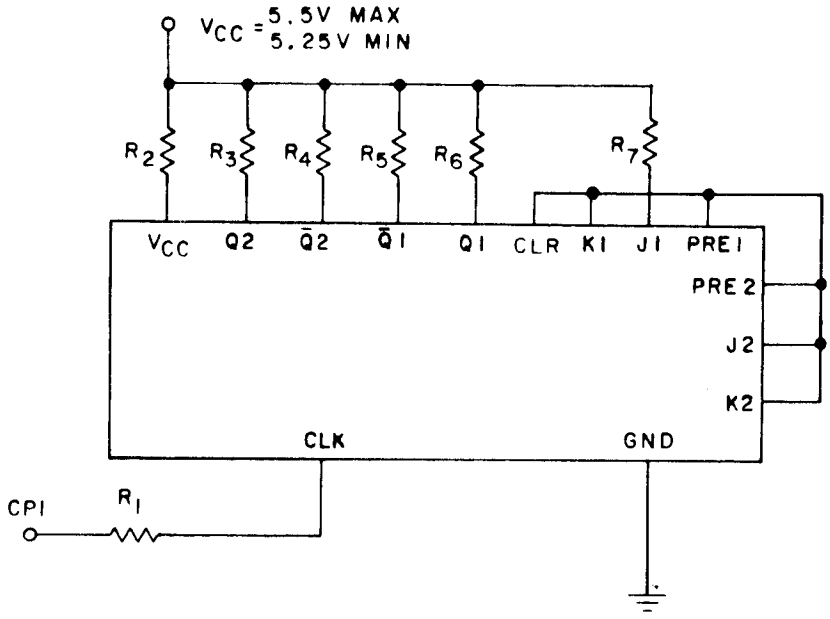

Notes:
1. R_1 = 27Ω ±5%.
2. R_2 = 4.7Ω ±5%.
3. R_3 - R_7 = 220Ω ±5%.
4. CP_1 = 100 kHz ±50% square wave; duty cycle = 50 ±15%;
   V_{IL} = -0.5 V minimum to +0.8 maximum;
   V_{IH} = 2.0 V minimum to 5.5 V maximum.

FIGURE 4. Burn-in and life-test circuits - Continued.

Device types 05 and 06

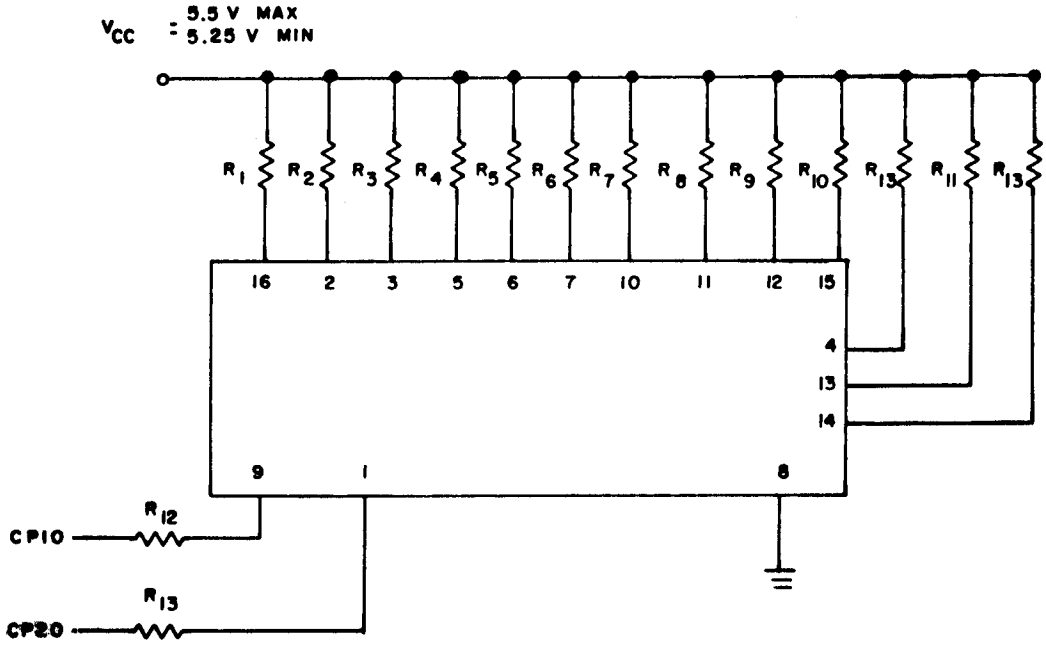

NOTES:

1. R_1 = 4.7Ω ±5%.
2. R_2 through R_{11} = 270Ω ±5%.
3. R_{12} = R_{13} = 27Ω ±5%.
4. CP_1 = 100 kHz ±50% square wave; duty cycle = 50 ±15%;
   V_{IL} = -0.5 V minimum to +0.8 maximum;
   V_{IH} = 2.0 V minimum to 5.5 V maximum.
5. CP_2 = 50 kHz ±50% square wave; duty cycle = 50 ±15%;
   V_{IL} = -0.5 V minimum to +0.8 maximum;
   V_{IH} = 2.0 V minimum to 5.5 V maximum.

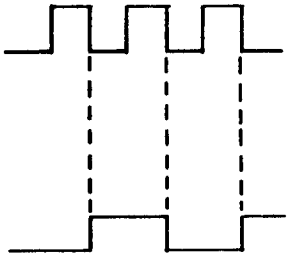

FIGURE 4. Burn-in and life test circuits - Continued.

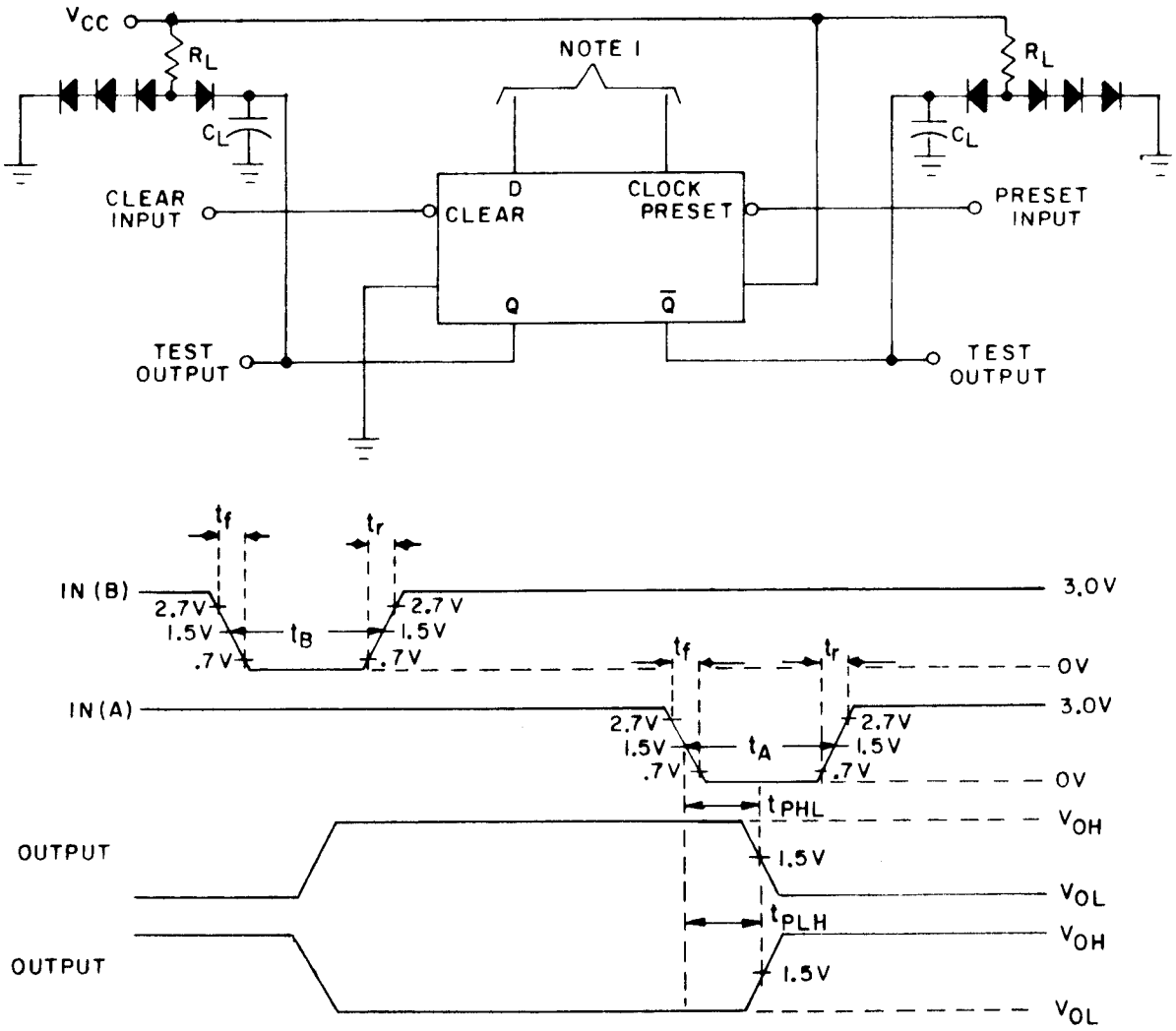

NOTES:
1. Clear and preset inputs dominate regardless of the state of clock or D inputs.
2. All diodes are 1N3064, or equivalent.
3. $t_f = t_r \leq 2.5$ ns; $t_A = 10$ ns; $t_B = 10$ ns, PRR $\leq$ 1 MHz.
4. $C_L = 50$ pF ±10%, including jig and probe capacitance.
5. $R_L = 280\Omega$ ±5%.

FIGURE 5. Clear and preset switching test circuit and waveforms for device type 01.

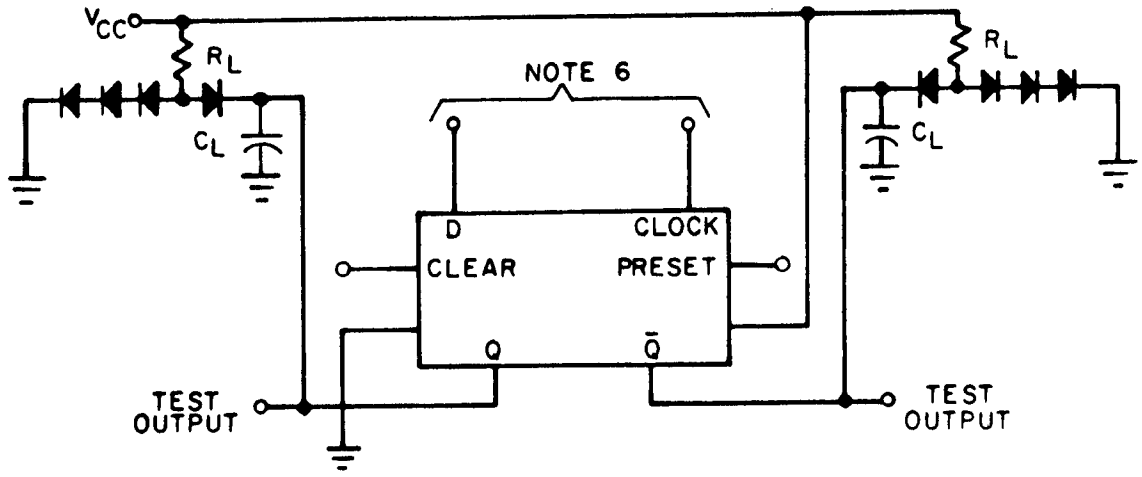

NOTES:
1. $t_r = t_f \leq 2.5$ ns, $t_{(SETUP)}$ L = 3 ns, $t_{(HOLD)}$ L = 2 ns, $t_{(SETUP)}$ H = 3 ns, $t_{(HOLD)}$ h = 2 ns, PRR $\leq$ 1 MHz, t_D = 10 ns.
2. When testing F_{MAX} for subgroup 9, IN(D) PRR = 75 MHz with t_D = 6 ns; and for subgroups 10 and 11, IN(D) PRR = 55 MHz with t_D = 8 ns.
3. C_L = 50 pF ±10%, including jig and proble capacitance.
4. R_L = 280Ω ±5%.
5. All diodes are 1N3064, or equivalent.
6. See table III for input conditions.
7. Setup and hold time functionality may be verified by separate test from propagation delay tests, by monitoring the output at specified setup hold conditions.

FIGURE 6. Synchronous waveforms and test circuit type 01.

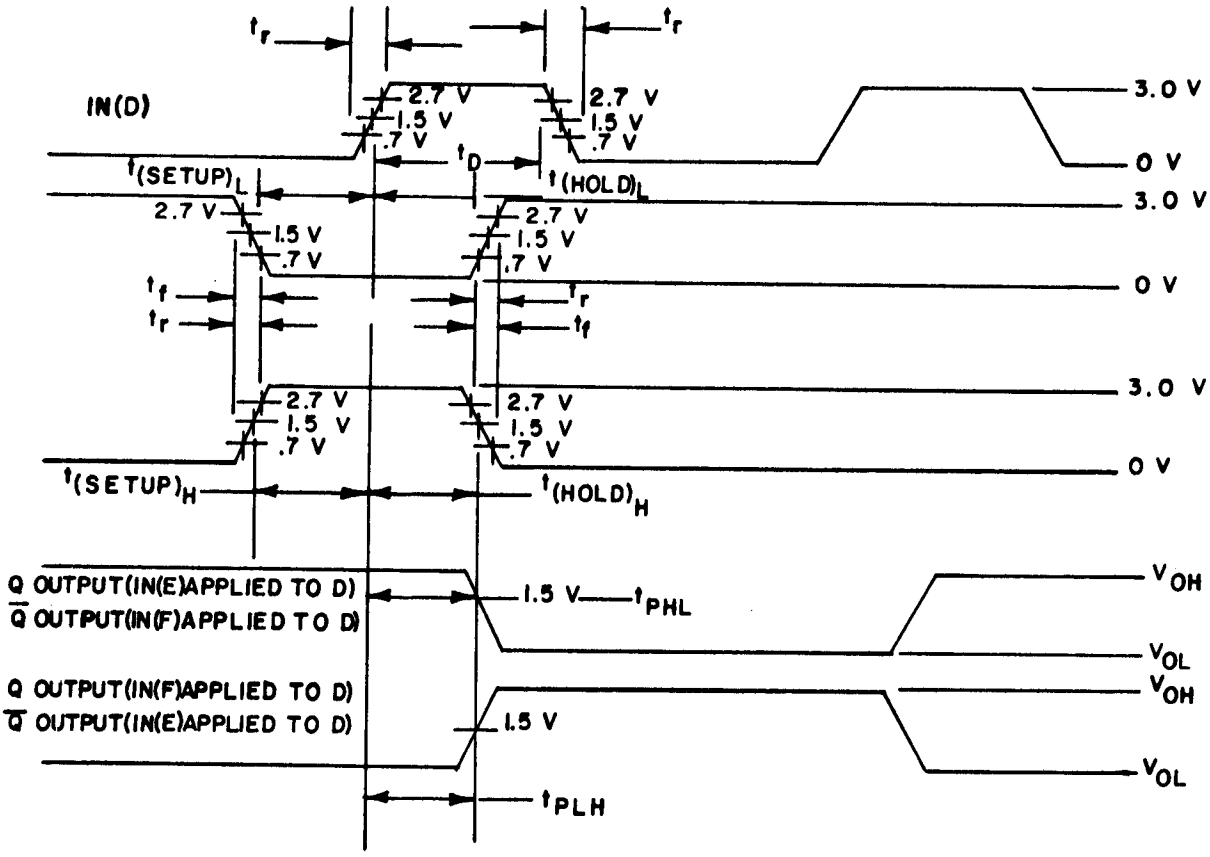

FIGURE 6. Synchronous waveforms and test circuit type 01 - Continued.

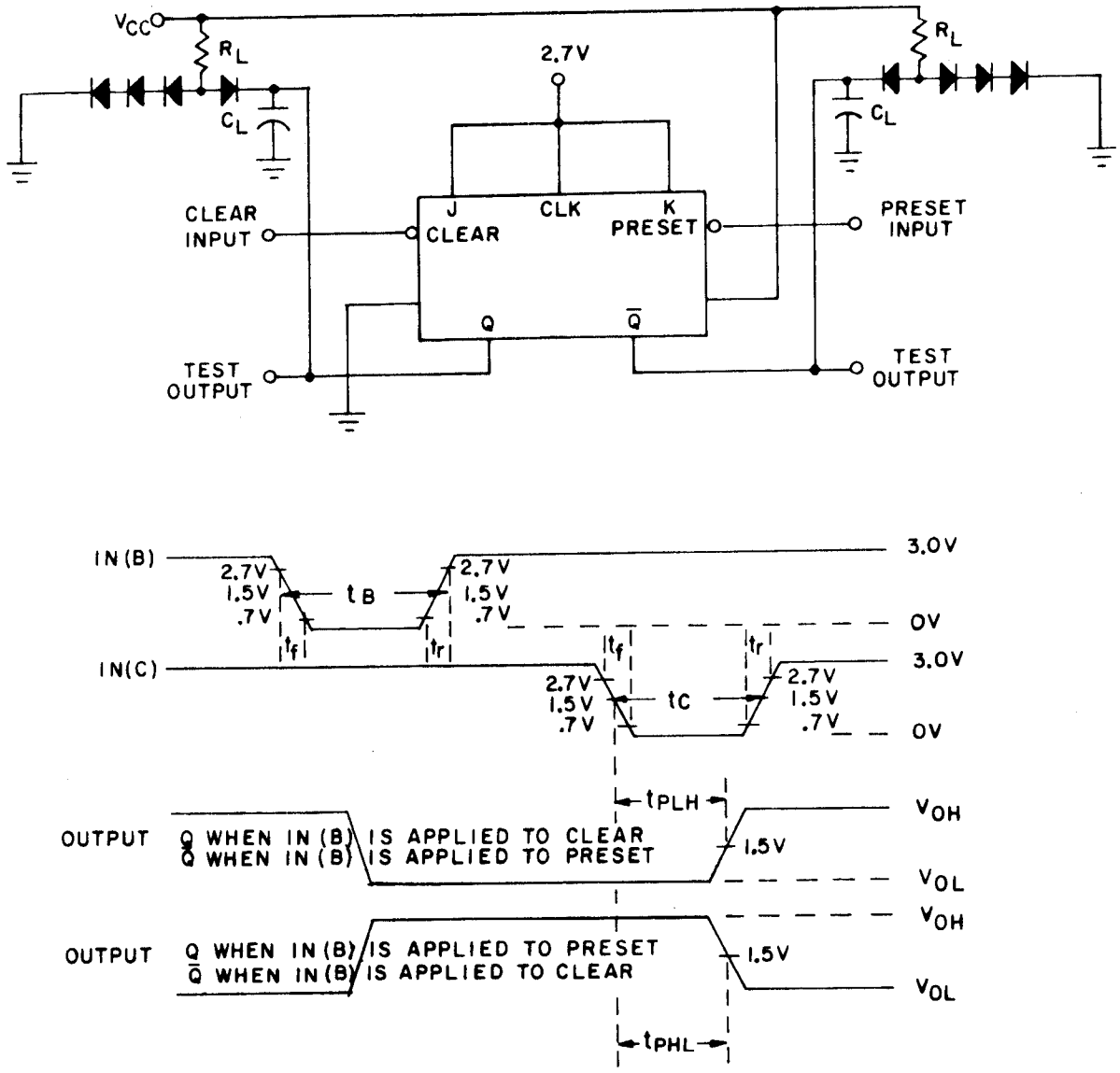

NOTES:
1. IN(B) and IN(C) have the following characteristics:
   $t_B = t_C = 10$ ns; $t_f = t_r \leq 2.5$ ns; PRR $\leq$ 1 MHz.
2. Clear and preset dominate regardless of the state of the J, K, and clock inputs.
3. $R_L = 280\Omega \pm 5\%$.
4. $C_L = 50$ pF $\pm 10\%$, including jig and probe capacitance.
5. All diodes are 1N3064, or equivalent.

FIGURE 7. Clear and preset switching test circuit and waveforms for device types 02 and 04.

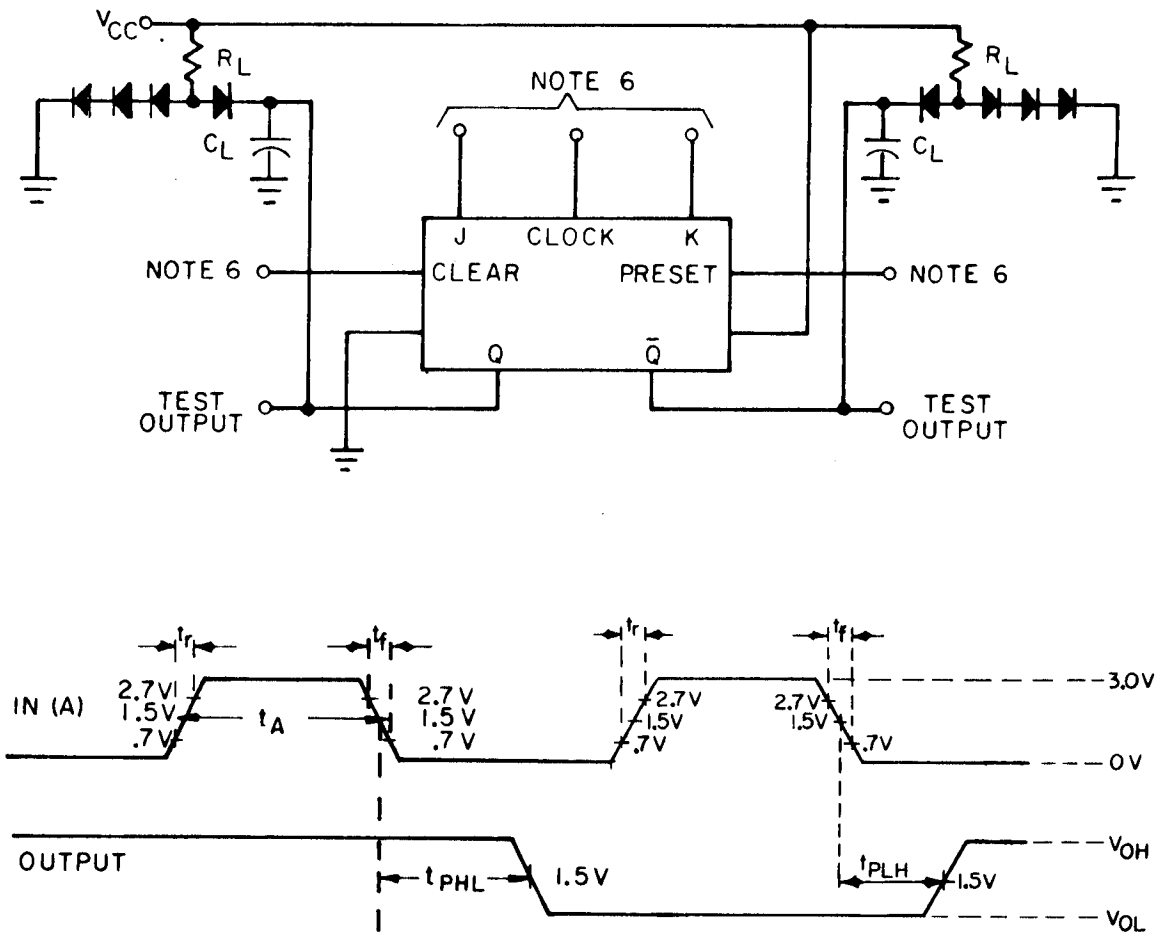

NOTES:
1. $t_r = t_f \leq 2.5$ ns, when testing F_{MAX} IN(A) PRR = 80 MHz, 50% dc for subgroups 9; PRR = 60 MHz, 50% dc for subgroups 10 and 11.
2. t_A = 10 ns, PRR $\leq$ 1 MHz.
3. C_L = 50 pF ±10%, including jig and probe capacitance.
4. R_L = 280Ω ±5%.
5. All diodes are 1N3064, or equivalent.
6. See table III for input conditions.

FIGURE 8. Synchronous switching waveforms and test circuit for device types 02 and 04.

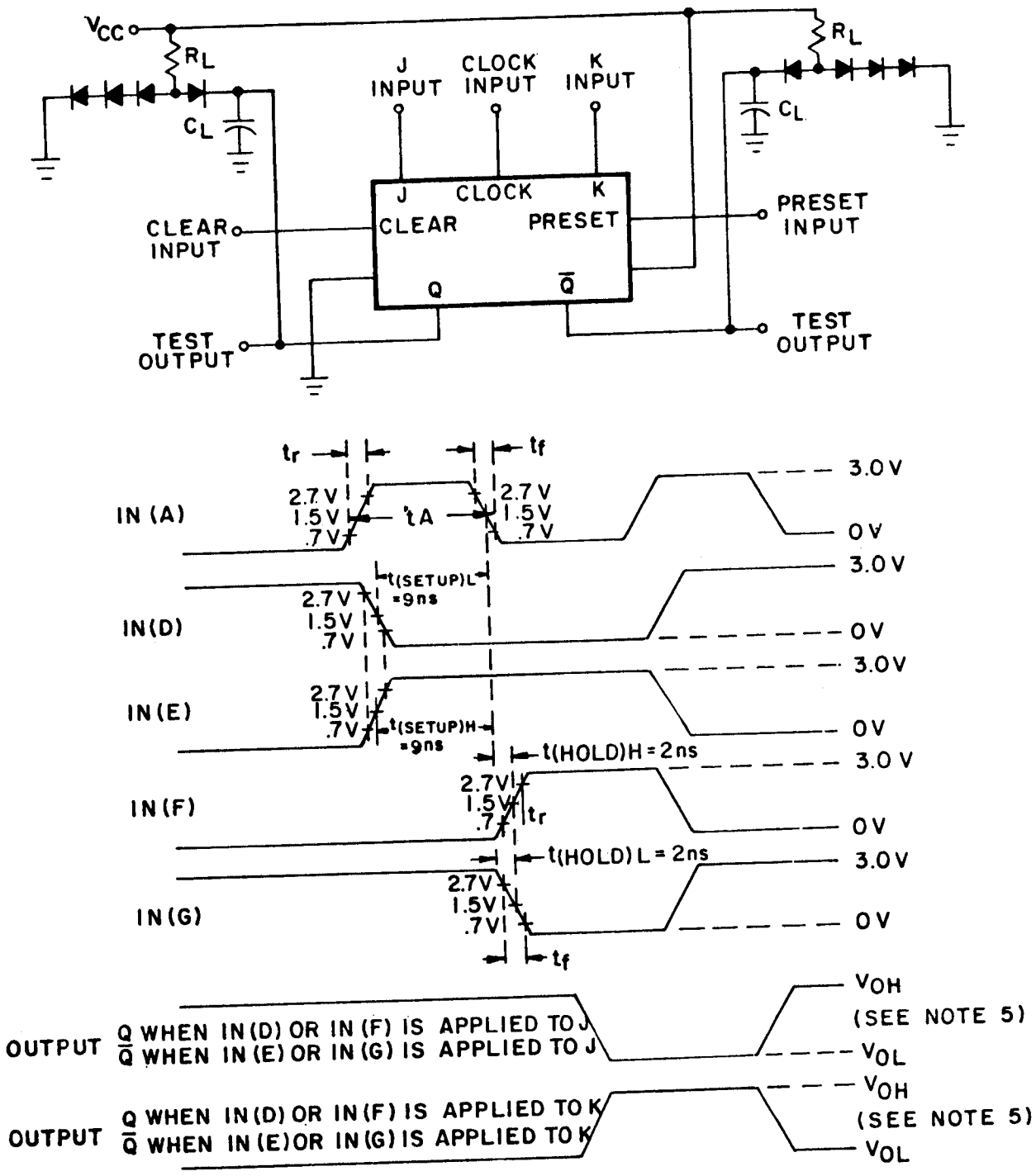

NOTES:
1. $t_r = t_f \leq 2.5$ ns for all inputs.
2. IN(A) has the following characteristics: $t_A = 10$ ns, PRR $\leq$ 1 MHz.
3. $R_L = 280\,\Omega \pm 5\%$, $C_L = 50$ pF $\pm 10\%$, including jig and probe capacitance.
4. All diodes are 1N3064, or equivalent.
5. Monitor output to verify functionality with t(SETUP), t(HOLD) limit conditions as shown above.

FIGURE 9. Test circuits and waveforms for device types 02 and 04.

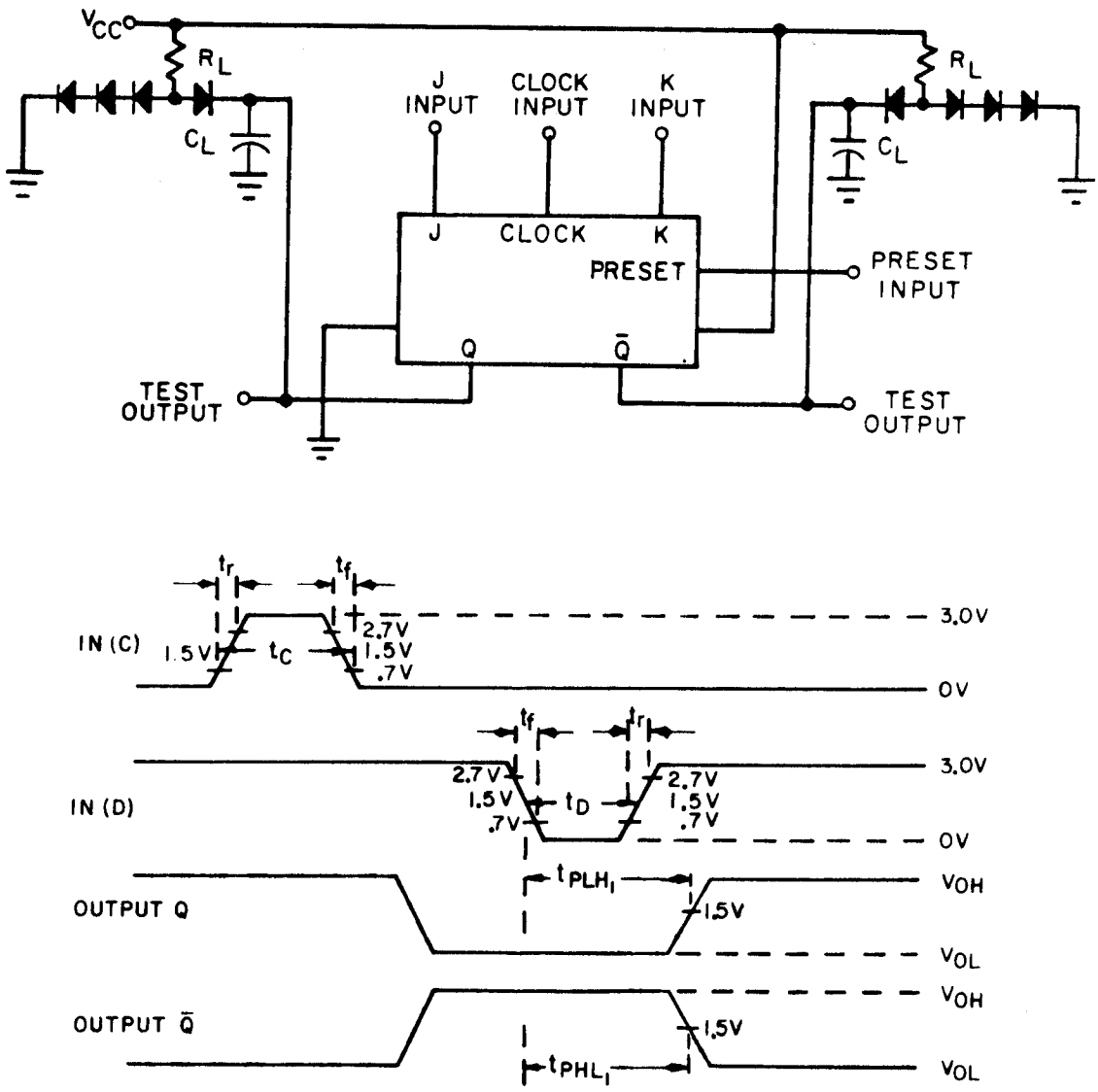

NOTES:

1. IN(C) has the following characteristics: t_C = 10 ns, $t_r = t_f \leq 2.5$ ns; PRR $\leq$ 1 MHz.
2. IN(D) has the following characteristics: t_D = 10 ns, $t_r = t_f \leq 2.5$ ns; PRR $\leq$ 1 MHz.
3. R_L = 280Ω ±5%.
4. C_L = 50 pF ±10%, including jig and probe capacitance.
5. All diodes are 1N3064, or equivalent.

FIGURE 10. Preset switching test circuit and waveforms for device type 03.

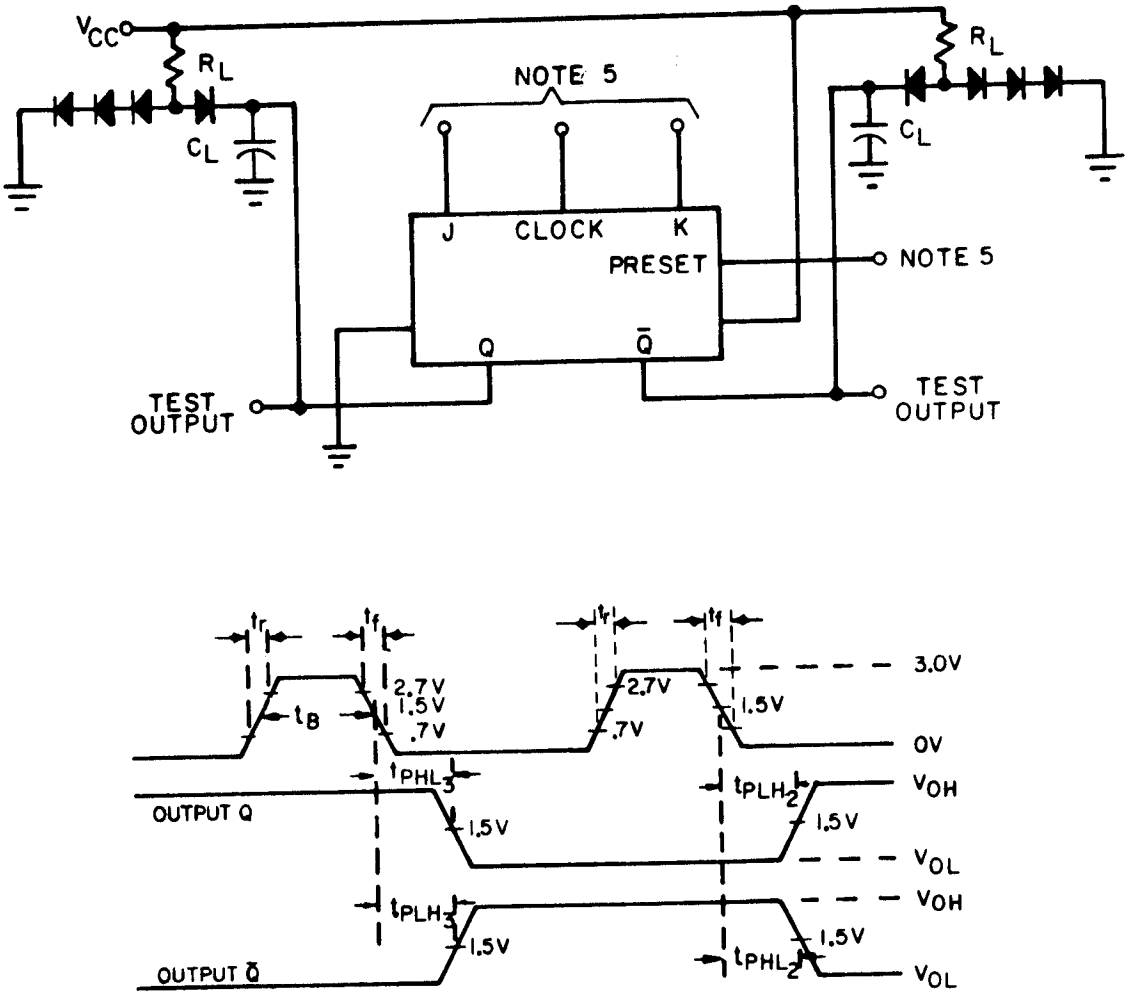

NOTES:
1. IN(B) has the following characteristics: t_B = 10 ns; $t_r = t_f \leq 2.5$ ns; PRR $\leq$ 1 MHz (when testing F_{MAX} PRR = 80 MHz for subgroup 9, PRR = 60 MHz for subgroups 10 and 11).
2. C_L = 50 pF ± 10%, including jig and probe capacitance.
3. R_L = 280Ω ± 5%.
4. All diodes are 1N3064, or equivalent.
5. See table III for input conditions.

FIGURE 11. Synchronous switching test circuit and waveforms for device type 03.

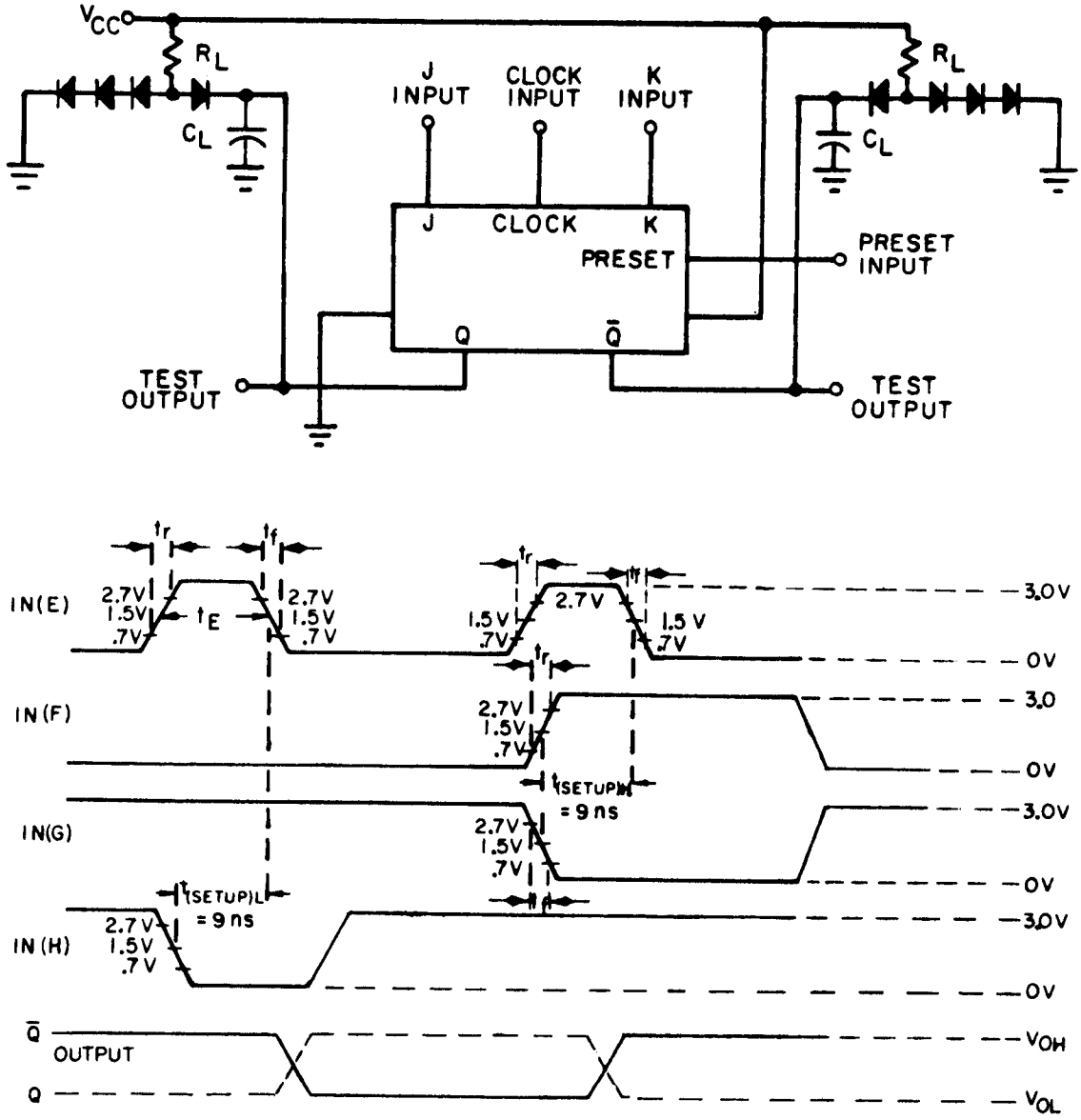

NOTES:
1. IN(E) has the following characteristics: t_E = 10 ns, $t_r = t_f \leq 2.5$ ns; PRR $\leq$ 1 MHz.
2. $t_r = t_f < 2.5$ ns for IN(F), IN(G), and IN(H).
3. R_L = 280Ω ±5%.
4. C_L = 50 pF ±10%, including jig and probe capacitance.
5. All diodes are 1N3064, or equivalent.
6. Monitor output to verify functionality with $t_{(SETUP)}$ limit conditions.

FIGURE 12. $t_{(SETUP)}$ waveforms and test circuit for device type 03.

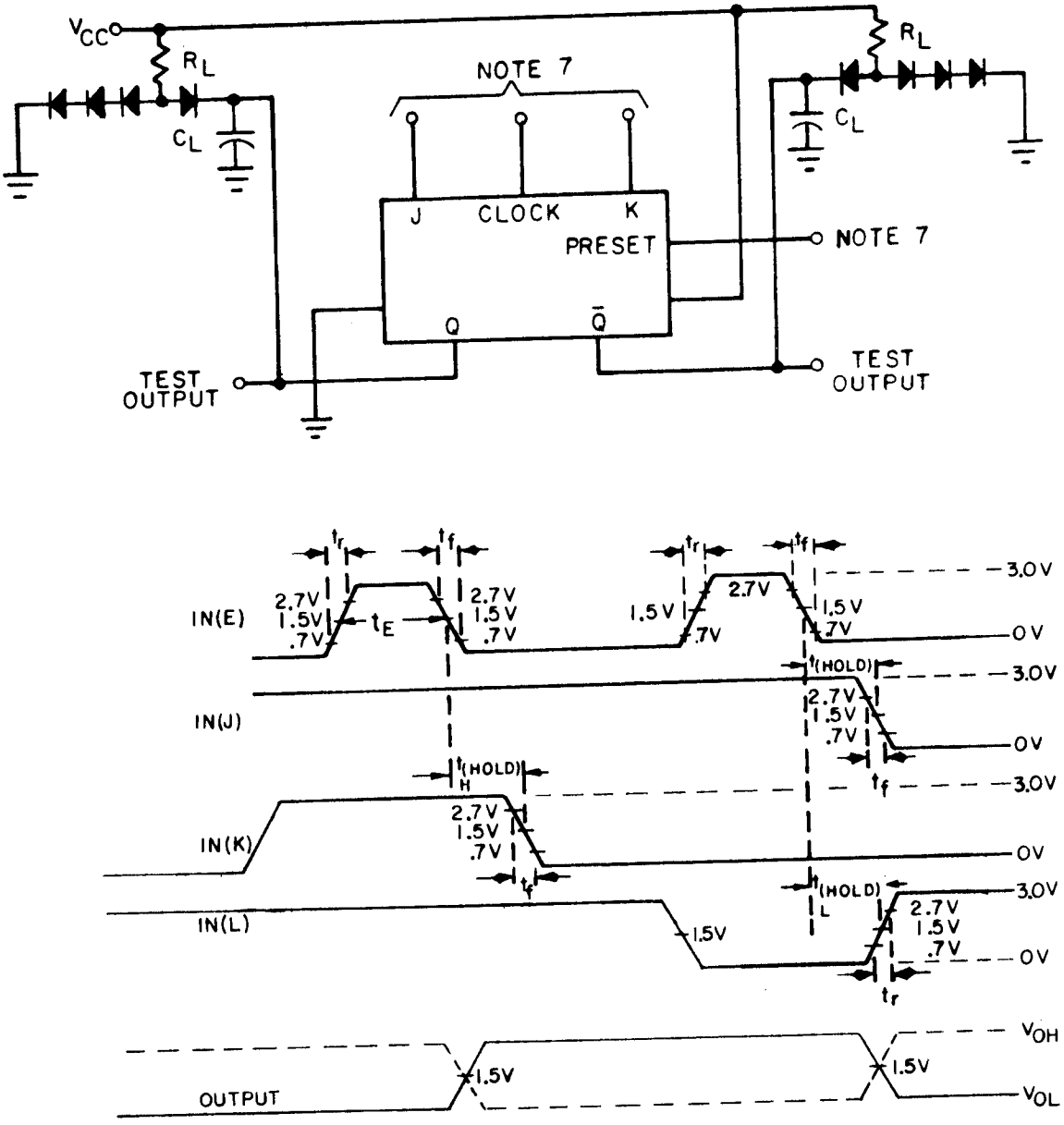

NOTES:
1. All inputs: $t_r = t_f \leq 2.5$ ns.
2. IN(E) has the following characteristics: $t_E = 10$ ns; PRR $\leq$ 1 MHz.
3. $R_L = 280\Omega \pm 5\%$.
4. $C_L = 50$ pF $\pm 10\%$, including jig and probe capacitance.
5. All diodes are 1N3064, or equivalent.
6. $t_{(HOLD)}$ H = 2 ns, $t_{(HOLD)}$ L = 2 ns.
7. See table III for input conditions.
8. Monitor output to verify functionality with $t_{(SETUP)}$ limit conditions.

FIGURE 13. $t_{(HOLD)}$ waveforms and test circuit for type 03.

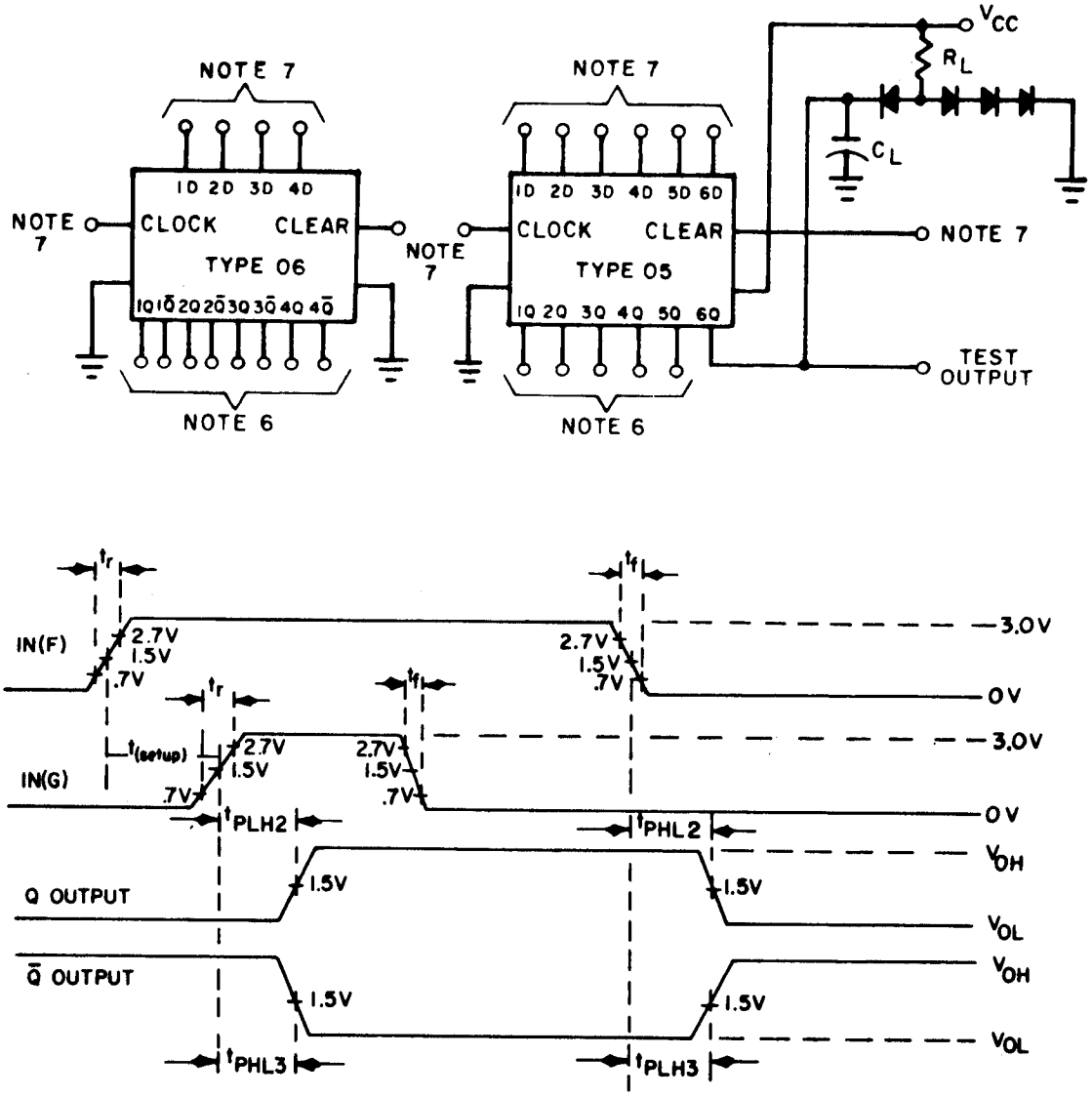

NOTES:
1. $t_r = t_f \leq 2.5$ ns; IN(F) PRR $\leq$ 1 MHz.
2. t(SETUP) = 7 ns.
3. C_L = 50 pF ±10%, including jig and probe capacitance.
4. R_L = 280Ω ±5%.
5. All diodes are 1N3064, or equivalent.
6. All load circuits are as shown for 6Q.
7. See table III for input conditions.

FIGURE 14. Clear waveforms and test circuits for types 05 and 06.

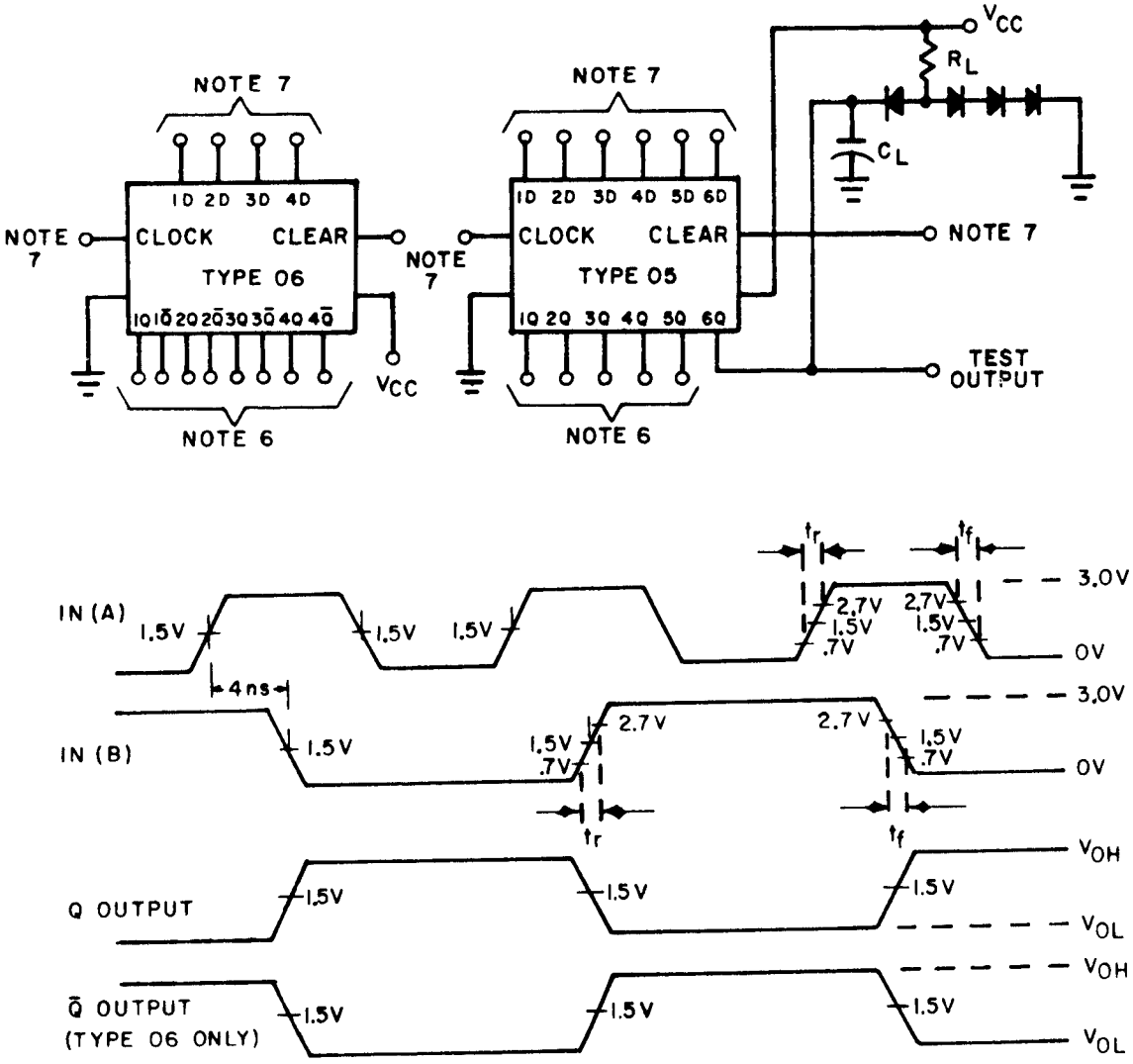

NOTES:

1. $t_r = t_f \leq 2.5$ ns; IN(A) and IN(B).
2. IN(A) PRR = 75 MHz 50% dc, IN(B) PRR = 37.5 MHz 50% dc, for subgroup 9; IN(A) PRR = 55 MHz 50% dc, IN(B) PRR = 27.5 MHz 50% dc for subgroups 10 and 11.
3. C_L = 50 pF ±10%, including jig and probe capacitance.
4. R_L = 280Ω ±5%.
5. All diodes are 1N3064, or equivalent.
6. All load circuits are as shown for 6Q.
7. See table III for input conditions.

FIGURE 15. F_{MAX} waveforms and test circuit for types 05 and 06.

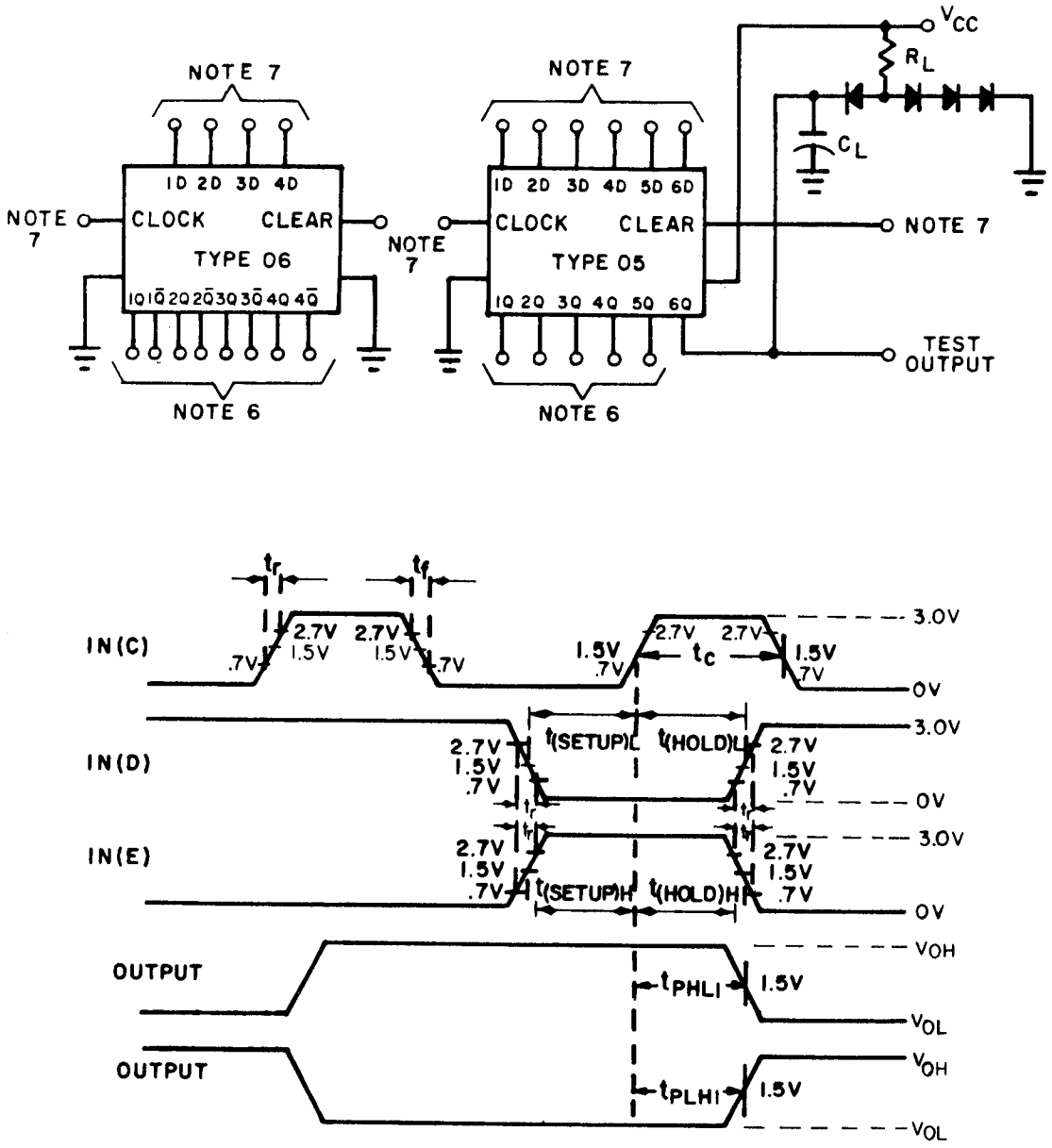

NOTES:
1. $t_r = t_f \leq 2.5$ ns; IN(C) PRR $\leq$ 1 MHz; $t_c = 10$ ns.
2. $t_{(SETUP)\ L} = 7$ ns, $t_{(HOLD)\ L} = 5$ ns, $t_{(SETUP)\ H} = 7$ ns, $t_{(HOLD)\ H} = 5$ ns.
3. $C_L = 50$ pF ±10%, including jig and probe capacitance.
4. $R_L = 280\Omega$ ±5%.
5. All diodes are 1N3064, or equivalent.
6. All load circuits are as shown for 6Q.
7. See table III for input conditions.
8. Setup and hold time functionally may be verified by separate tests from propagation delay tests by monitoring the output at specified setup and hold conditions.

FIGURE 16. Synchronous switching waveforms and test circuit - types 05 and 06.

TABLE III. Group A inspection for device type 01.
Terminal conditions (pins not designated may be high ≥ 2.0 V, low ≤ 0.8 V, or open).

Subgroup	Symbol	MIL-STD-883 method	Cases A, B, C, D	1	2	3	4	5	6	7	8	9	10	11	12	13	14	Measured terminal	Limits		Unit
			Test no.	CLR 1	D1	CLK 1	PRE 1	Q1	$\overline{Q1}$	GND	$\overline{Q2}$	Q2	PRE 2	CLK 2	D2	CLR 2	V_{CC}		Min	Max	
T_C = +25°C (1)	V_{OH}	3006	1	2.0 V	5.5 V	C	0.8 V	-1 mA		GND							4.5 V	Q1	2.5		V
		"	2	0.8 V	5.5 V	C	2.0 V		-1 mA	"							"	$\overline{Q1}$	"		"
		"	3							"		-1 mA	0.8 V	C	5.5 V	2.0 V	"	Q2	"		"
		"	4							"	-1 mA		2.0 V	C	5.5 V	0.8 V	"	$\overline{Q2}$	"		"
		"	5	5.5 V	2.0 V	C	5.5 V	-1 mA		"							"	Q1	"		"
		"	6	5.5 V	0.8 V	C	5.5 V		-1 mA	"							"	$\overline{Q1}$	"		"
		"	7							"		-1 mA	5.5 V	C	2.0 V	5.5 V	"	Q2	"		"
		"	8							"	-1 mA		5.5 V	C	0.8 V	5.5 V	"	$\overline{Q2}$	"		"
	V_{OL}	3007	9	2.0 V	5.5 V	C	0.8 V		20 mA	"							"	$\overline{Q1}$		0.5	"
		"	10	0.8 V	5.5 V	C	2.0 V	20 mA		"							"	Q1		"	"
		"	11							"	20 mA		0.8 V	C	5.5 V	2.0 V	"	$\overline{Q2}$		"	"
		"	12							"		20 mA	2.0 V	C	5.5 V	0.8 V	"	Q2		"	"
		"	13	5.5 V	2.0 V	C	5.5 V		20 mA	"							"	$\overline{Q1}$		"	"
		"	14	5.5 V	0.8 V	C	5.5 V	20 mA		"							"	Q1		"	"
		"	15							"	20 mA		5.5 V	C	2.0 V	5.5 V	"	$\overline{Q2}$		"	"
		"	16							"		20 mA	5.5 V	C	0.8 V	5.5 V	"	Q2		"	"
	V_{IC}		17	-18 mA						"							"	CLR 1		-1.2	"
			18		-18 mA					"							"	D1		"	"
			19			-18 mA				"							"	CLK 1		"	"
			20				-18 mA			"							"	PRE 1		"	"
			21							"			-18 mA				"	PRE 2		"	"
			22							"				-18 mA			"	CLK 2		"	"
			23							"					-18 mA		"	D2		"	"
			24							"						-18 mA	"	CLR 2		"	"
	I_{IL1}	3009	25	5.5 V	0.5 V	GND				"							5.5 V	D1	-1	-2	mA
		"	26							"				GND	0.5 V	5.5 V	"	D2	-1	-2	"
	I_{IL2}	"	27	0.5 V		5.5 V	GND			"							"	CLR 1	-3	-6	"
		"	28							"			GND	5.5 V		0.5 V	"	CLR 2	-3	-6	"
	I_{IL3}	"	29	GND	GND		0.5 V			"							"	PRE 1	-2	-4	"
		"	30							"			0.5 V		GND	GND	"	PRE 2	-2	-4	"
	I_{IL4}	"	31	5.5 V	GND	0.5 V	GND			"							"	CLK 1	-2	-4	"
		"	32							"			GND	0.5 V	GND	5.5 V	"	CLK 2	-2	-4	"
	I_{IH1}	3010	33	GND	2.7 V	5.5 V				"							"	D1		50	μA
		"	34							"				5.5 V	2.7 V	GND	"	D2		50	μA
	I_{IH5}	"	35	GND	5.5 V	5.5 V				"							"	D1		1	mA
		"	36							"				5.5 V	5.5 V	GND	"	D2		1	mA
	I_{IH2}	"	37	2.7 V	GND	GND	5.5 V			"							"	CLR 1		150	μA
		"	38							"			5.5 V	GND	GND	2.7 V	"	CLR 2		150	μA

See footnotes at end of device type 01.

TABLE III. Group A inspection for device type 01 - Continued.
Terminal conditions (pins not designated may be high ≥ 2.0 V, low ≤ 0.8 V, or open).

Subgroup	Symbol	MIL-STD-883 method	Cases A, B, C, D	1	2	3	4	5	6	7	8	9	10	11	12	13	14	Measured terminal	Limits		Unit
			Test no.	CLR 1	D1	CLK 1	PRE 1	Q1	$\overline{Q1}$	GND	$\overline{Q2}$	Q2	PRE 2	CLK 2	D2	CLR 2	V_{CC}		Min	Max	
T_C = +25°C 1/	I_{IH5}	3010	39	5.5 V	GND	GND	5.5 V			GND							5.5 V	CLR 1		1	mA
		"	40							"			5.5 V	GND	GND	5.5 V	"	CLR 2		1	mA
	I_{IH3}	"	41	5.5 V	5.5 V	C	2.7 V			"							"	PRE 1		100	µA
		"	42							"			2.7 V	C	5.5 V	5.5 V	"	PRE 2		100	µA
	I_{IH5}	"	43	5.5 V	5.5 V	C	5.5 V			"							"	PRE 1		1	mA
		"	44							"			5.5 V	C	5.5 V	5.5 V	"	PRE 2		1	mA
	I_{IH4}	"	45	5.5 V	5.5 V	2.7 V	GND			"							"	CLK 1		100	µA
		"	46							"			GND	2.7 V	5.5 V	5.5 V	"	CLK 2		100	µA
	I_{IH5}	"	47	5.5 V	5.5 V	5.5 V	GND			"							"	CLK 1		1	mA
		"	48							"			GND	5.5 V	5.5 V	5.5 V	"	CLK 2		1	mA
	I_{OS}	3011	49	GND			5.5 V		GND	"							"	$\overline{Q1}$	-40	-100	mA
		"	50	5.5 V			GND	GND		"							"	Q1	"	10/	"
		"	51							"	GND		5.5 V			GND	"	$\overline{Q2}$	"	"	"
		"	52							"		GND	GND			5.5 V	"	Q2	"	"	"
	I_{CC}	3005	53	5.5 V		GND	GND			"			GND	GND		5.5 V	"	V_{CC}		50	"
		3005	54	GND		GND	5.5 V			"			5.5 V	GND		GND	"	V_{CC}		50	"
	I_{CEX}		55	5.5 V	5.5 V	C	GND	5.5 V		"							"	Q1		250	µA
			56	GND	5.5 V	C	5.5 V		5.5 V	"							"	$\overline{Q1}$		"	"
			57							"		5.5 V	GND	C	5.5 V	5.5 V	"	Q2		"	"
			58							"	5.5 V		5.5 V	C	5.5 V	GND	"	$\overline{Q2}$		"	"
2	Same tests, terminal conditions, limited as for subgroup 1, except T_C = +125°C, V_{IC} tests are omitted. $V_{OL(max)}$ = 0.45 V, V_{IL} = 0.7 V.																				
3	Same tests, terminal conditions, limits as for subgroup 1, except T_C = -55°C and V_{IC} tests are omitted.																				
7 1/ 2/ T_C = +25°C			59	B	B	B	B	H	H	GND	H	H	B	B	B	B	4.5 V	All outputs	H or L as shown 3/		Vdc
			60	B	"	"	A	L	"	"	"	L	A	"	"	B	"	"	"		"
			61	A	"	"	A	L	"	"	"	L	A	"	"	A	"	"	"		"
			62	"	"	"	B	H	L	"	L	H	B	"	"	"	"	"	"		"
			63	"	"	A	"	"	L	"	L	"	"	A	"	"	"	"	"		"
			64	B	"	"	"	"	H	"	H	"	"	"	"	B	"	"	"		"
			65	"	A	"	"	"	"	"	"	"	"	"	A	"	"	"	"		"
			66	"	"	"	A	L	"	"	"	L	A	"	"	"	"	"	"		"
			67	A	"	"	A	L	"	"	"	L	A	"	"	A	"	"	"		"
			68	"	"	"	B	H	L	"	L	H	B	"	"	"	"	"	"		"
			69	"	"	"	A	"	"	"	"	"	A	"	"	"	"	"	"		"
			70	"	"	B	"	"	"	"	"	"	"	B	"	"	"	"	"		"
			71	"	B	B	"	"	"	"	"	"	"	B	B	"	"	"	"		"
			72	"	"	A	"	L	H	"	H	L	"	A	"	"	"	"	"		"
			73	"	"	"	B	H	L	"	L	H	B	"	"	"	"	"	"		"
			74	B	A	"	B	H	H	"	H	H	B	"	A	B	"	"	"		"

See footnotes at end of device type 01.

TABLE III. Group A inspection for device type 01 - Continued.
Terminal conditions (pins not designated may be high ≥ 2.0 V, low ≤ 0.8 V, or open).

Subgroup	Symbol	MIL-STD-883 method	Cases A, B, C, D	1	2	3	4	5	6	7	8	9	10	11	12	13	14	Measured terminal	Limits		Unit
			Test no.	CLR 1	D1	CLK 1	PRE 1	Q1	$\overline{Q1}$	GND	$\overline{Q2}$	Q2	PRE 2	CLK 2	D2	CLR 2	V_{CC}		Min	Max	
7 1/ 2/ T_C = +25°C			75	B	B	A	B	H	H	GND	H	H	B	A	B	B	4.5 V	All outputs	H or L as shown 3/		
			76	B	"	"	A	L	"	"	"	L	A	"	"	B	"	"	"		
			77	A	"	"	"	"	"	"	"	"	"	"	"	A	"	"	"		
			78	"	A	B	"	"	"	"	"	"	"	B	A	"	"	"	"		
			79	"	"	A	"	H	L	"	L	H	"	A	"	"	"	"	"		
			80	"	"	"	B	"	"	"	"	"	B	"	"	"	"	"	"		
			81	"	"	"	A	"	"	"	"	"	A	"	"	"	"	"	"		
			82	B	"	"	"	L	H	"	H	L	"	"	"	B	"	"	"		
			83	A	"	"	"	L	H	"	H	L	"	"	"	A	"	"	"		
			84	"	B	"	B	H	L	"	L	H	B	"	B	"	"	"	"		
			85	"	B	"	A	H	L	"	L	H	A	"	B	"	"	"	"		
8 1/ 2/	Same tests, terminal conditions, and limits as for subgroup 7, except T_C = +125°C and -55°C.																				
9 T_C = +25°C	f_{MAX} 8/	Fig. 6	86	5.0 V	E	IN (D)	5.0 V	OUT		GND							5.0 V	1Q	75		MHz 1/
	f_{MAX} 8/	Fig. 6	87							"		OUT	5.0 V	IN (D)	E	5.0 V	"	2Q	75		MHz 1/
	t_{PLH1}	Fig. 5	88	IN (A)		GND	IN (B)		OUT	"							"	CLR 1 to $\overline{Q1}$	2.0	8.0	ns
		"	89	IN (B)		GND	IN (A)	OUT		"							"	PRE 1 to Q1	"	"	"
		"	90							"	OUT		IN (B)	GND		IN (A)	"	CLR 2 to $\overline{Q2}$	"	"	"
		"	91							"		OUT	IN (A)	GND		IN (B)	"	PRE 2 to Q2	"	"	"
	t_{PLH2}	Fig. 6	92							"		OUT	5.0 V	IN (D)	IN (F)	F	"	CLK 2 to Q2	"	13.0	"
		9/	93							"	OUT		F	IN (D)	IN (E)	5.0 V	"	CLK 2 to $\overline{Q2}$	"	"	"
		"	94	F	IN (F)	IN (D)	5.0 V	OUT		"							"	CLK 1 to Q1	"	"	"
		"	95	5.0 V	IN (E)	"	F		OUT	"							"	CLK 1 to $\overline{Q1}$	"	"	"
	t_{PHL2}	"	96	5.0 V	IN (E)	"	F	OUT		"							"	CLK 1 to Q1	"	10.0	"
		"	97	F	IN (F)	"	5.0 V		OUT	"							"	CLK 1 to $\overline{Q1}$	"	"	"
		"	98							"		OUT	F	IN (D)	IN (E)	5.0 V	"	CLK 2 to Q2	"	"	"
		"	99							"	OUT		5.0 V	IN (D)	IN (F)	F	"	CLK 2 to $\overline{Q2}$	"	"	"
	t_{PHL3}	Fig. 5	100							"		OUT	IN (B)	2.7 V		IN (A)	"	CLR 2 to Q2	"	16.0	"
		Fig. 5	101							"	OUT		IN (A)	2.7 V		IN (B)	"	PRE 2 to $\overline{Q2}$	"	16.0	"

See footnotes at end of device type 01.

TABLE III. Group A inspection for device type 01 - Continued.
Terminal conditions (pins not designated may be high ≥ 2.0 V, low ≤ 0.8 V, or open).

Subgroup	Symbol	MIL-STD-883 method	Cases A, B, C, D	1	2	3	4	5	6	7	8	9	10	11	12	13	14	Measured terminal	Limits		Unit
			Test no.	CLR 1	D1	CLK 1	PRE 1	Q1	$\overline{Q1}$	GND	$\overline{Q2}$	Q2	PRE 2	CLK 2	D2	CLR 2	V_{CC}		Min	Max	
T_C = +25°C [9]	t_{PHL4}	Fig. 5	102							GND	OUT		IN (A)	GND		IN (B)	5.0 V	PRE 2 to $\overline{Q2}$	2.0	10.0	ns
		"	103							"		OUT	IN (B)	GND		IN (A)	"	CLR 2 to Q2	"	10.0	"
	t_{PHL3}	"	104	IN (B)		2.7 V	IN (A)		OUT	"							"	PRE 1 to $\overline{Q1}$	"	16.0	"
		"	105	IN (A)		2.7 V	IN (B)	OUT		"							"	CLR 1 to Q1	"	16.0	"
	t_{PHL4}	"	106	IN (A)		GND	IN (B)	OUT		"							"	CLR 1 to Q1	"	10.0	"
		"	107	IN (B)		GND	IN (A)		OUT	"							"	PRE 1 to $\overline{Q1}$	"	10.0	"
	t_{SETUP} (H)	Fig. 6	108	F	IN (F)	IN (D)	5.0 V	OUT		"		OUT	5.0 V	IN (D)	IN (F)	F	"	Q2	9/		
		"	109	F	IN (F)	IN (D)	5.0 V		OUT	"							"	Q1	"		
		"	110							"							"	$\overline{Q1}$	"		
		"	111							"	OUT		5.0 V	IN (D)	IN (F)	F	"	$\overline{Q2}$	"		
	t_{SETUP} (L)	"	112	5.0 V	IN (E)	IN (D)	F		OUT	"	OUT		F	IN (D)	IN (E)	5.0 V	"	$\overline{Q2}$	"		
		"	113	5.0 V	IN (E)	IN (D)	F	OUT		"							"	$\overline{Q1}$	"		
		"	114							"							"	Q1	"		
		"	115							"		OUT	F	IN (D)	IN (E)	5.0 V	"	Q2	"		
	$t_{(HOLD)}$ (H)	"	116	F	IN (F)	IN (D)	5.0 V	OUT		"		OUT	5.0 V	IN (D)	IN (F)	F	"	Q2	"		
		"	117	F	IN (F)	IN (D)	5.0 V		OUT	"							"	Q1	"		
		"	118							"							"	$\overline{Q1}$	"		
		"	119							"	OUT		5.0 V	IN (D)	IN (F)	F	"	$\overline{Q2}$	"		
	$t_{(HOLD)}$ (L)	"	120	5.0 V	IN (E)	IN (D)	F		OUT	"	OUT		F	IN (D)	IN (E)	5.0 V	"	$\overline{Q2}$	"		
		"	121	5.0 V	IN (E)	IN (D)	F	OUT		"							"	$\overline{Q1}$	"		
		"	122							"							"	Q1	"		
		"	123							"		OUT	F	IN (D)	IN (E)	5.0 V	"	Q2	"		
T_C = +125°C [10]	f_{MAX}	Fig. 6	124, 125	Same tests and terminal conditions as subgroup 9, except T_C = +125°C and limits are as shown.															55		MHz
	t_{PLH1}	Fig. 5	126-129																2.0	10.0	ns
	t_{PLH2}	Fig. 6 9/	130-133																"	16.0	"
	t_{PHL2}	Fig. 6 9/	134-137																"	13.0	"
	t_{PHL3}	Fig. 6	138-141																"	19.0	"

See footnotes at end of device type 01.

TABLE III. Group A inspection for device type 01 - Continued.
Terminal conditions (pins not designated may be high ≥ 2.0 V, low ≤ 0.8 V, or open).

Subgroup	Symbol	MIL-STD-883 method	Cases A, B, C, D	1	2	3	4	5	6	7	8	9	10	11	12	13	14	Measured terminal	Limits		Unit
			Test no.	CLR 1	D1	CLK 1	PRE 1	Q1	$\overline{Q1}$	GND	$\overline{Q2}$	Q2	PRE 2	CLK 2	D2	CLR 2	V_{CC}		Min	Max	
10 T_C = +125°C	t_{PHL4}	Fig. 5	142-145	Same tests and terminal conditions as subgroup 9, except T_C = +125°C and limits are as shown.															2.0	12.5	ns
	$t_{SETUP(H)}$	Fig. 6	146-149																9/		
	$t_{SETUP(L)}$	"	150-153																"		
	$t_{(HOLD)(H)}$	"	154-157																"		
	$t_{HOLD(L)}$	"	158-161																"		
11	Same tests, terminal conditions, limits as for subgroup 10, except T_C = -55°C.																				

1/ Only a summary of attributes data is required.

2/ Inputs: A = 3.0 V minimum, B = 0.0 V or GND.

3/ Outputs: H > 1.5 V, L < 1.5 V.

4/ C = Normal clock pulse.

5/ D = Momentary connection: 5.0 V to GND to 5.0 V (for subgroups 9, 10, 11. D occurs prior to their input pulses).

6/ E = Data input connected to Q output.

7/ F = Normal input conditioning is 5.0 V, however, momentary logic "0" may be applied for synchronizing test equipment for preconditioning the device.

8/ f_{MAX}, minimum limit specified is the frequency of the input pulse. The output frequency shall be one-half of the input frequency.

9/ SETUP and HOLD time functionality may be verified by separate tests from propagation delay tests, by monitoring the output at specified SETUP and HOLD conditions (see fig. 6).

10/ For circuit B, $I_{OS(max)}$ is -110 mA.

TABLE III. Group A inspection for device type 02.
Terminal conditions (pins not designated may be high ≥ 2.0 V, low ≤ 0.8 V, or open).

Subgroup	Symbol	MIL-STD-883 method	Cases E,F Test no.	1 CLK 1	2 K1	3 J1	4 PRE 1	5 Q1	6 $\overline{Q1}$	7 $\overline{Q2}$	8 GND	9 Q2	10 PRE 2	11 J2	12 K2	13 CLK 2	14 CLR 2	15 CLR 1	16 V_{CC}	Measured terminal	Limits Min	Limits Max	Unit
T_C [1] = +25°C	V_{OH}	3006	1	C	0.8 V	2.0 V	2.0 V	-1 mA			GND							2.0 V	4.5 V	Q1	2.5		V
		"	2								"	-1 mA	2.0 V	2.0 V	0.8 V	C	2.0 V		"	Q2	"		"
		"	3	C	2.0 V	0.8 V	2.0 V		-1 mA		"							2.0 V	"	$\overline{Q1}$	"		"
		"	4							-1 mA	"		2.0 V	0.8 V	2.0 V	C	2.0 V		"	$\overline{Q2}$	"		"
		"	5	5.5 V	5.5 V	5.5 V	0.8 V	-1 mA			"							2.0 V	"	Q1	"		"
		"	6								"	-1 mA	0.8 V	5.5 V	5.5 V	5.5 V	2.0 V		"	Q2	"		"
		"	7	5.5 V	5.5 V	5.5 V	2.0 V		-1 mA		"							0.8 V	"	$\overline{Q1}$	"		"
		"	8							-1 mA	"		2.0 V	5.5 V	5.5 V	5.5 V	0.8 V		"	$\overline{Q2}$	"		"
	V_{OL}	3007	9	C	0.8 V	2.0 V	2.0 V		20 mA		"							2.0 V	"	$\overline{Q1}$		0.5	"
		"	10							20 mA	"		2.0 V	2.0 V	0.8 V	C	2.0 V		"	$\overline{Q2}$		"	"
		"	11	C	2.0 V	0.8 V	2.0 V	20 mA			"							2.0 V	"	Q1		"	"
		"	12								"	20 mA	2.0 V	0.8 V	2.0 V	C	2.0 V		"	Q2		"	"
		"	13	5.5 V	5.5 V	5.5 V	0.8 V		20 mA		"							2.0 V	"	$\overline{Q1}$		"	"
		"	14							20 mA	"		0.8 V	5.5 V	5.5 V	5.5 V	2.0 V		"	$\overline{Q2}$		"	"
		"	15	5.5 V	5.5 V	5.5 V	2.0 V	20 mA			"							0.8 V	"	Q1		"	"
		"	16								"	20 mA	2.0 V	5.5 V	5.5 V	5.5 V	0.8 V		"	Q2		"	"
	V_{IC}		17	-18 mA							"								"	CLK 1		-1.2	"
			18		-18 mA						"								"	K1		"	"
			19			-18 mA					"								"	J1		"	"
			20				-18 mA				"								"	PRE 1		"	"
			21								"		-18 mA						"	PRE 2		"	"
			22								"			-18 mA					"	J2		"	"
			23								"				-18 mA				"	K2		"	"
			24								"					-18 mA			"	CLK 2		"	"
			25								"						-18 mA		"	CLR 2		"	"
			26								"							-18 mA	"	CLR 1		"	"
	I_{IL1}	3009	27	5.5 V	0.5 V	5.5 V	D				"							5.5 V	5.5 V	K1	-0.7	-1.6	mA
		"	28								"		D	5.5 V	0.5 V	5.5 V	5.5 V		"	K2	"	"	"
		"	29	5.5 V	5.5 V	0.5 V	5.5 V				"							D	"	J1	"	"	"
		"	30								"		5.5 V	0.5 V	5.5 V	5.5 V	D		"	J2	"	"	"
	I_{IL2}	"	31	5.5 V	5.5 V	5.5 V	5.5 V				"							0.5 V	"	CLR 1	-0.8	-6.0	"
	I_{IL2}	"	32								"		5.5 V	5.5 V	5.5 V	5.5 V	0.5 V		"	CLR 2	"	"	"
	I_{IL3}	"	33	5.5 V	5.5 V	5.5 V	0.5 V				"							5.5 V	"	PRE 1	"	"	"
	I_{IL3}	"	34								"		0.5 V	5.5 V	5.5 V	5.5 V	5.5 V		"	PRE 2	"	"	"
	I_{IL4}	"	35	0.5 V	5.5 V	5.5 V	5.5 V				"							D	"	CLK 1	-2	-4	"
	I_{IL4}	"	36								"		5.5 V	5.5 V	5.5 V	0.5 V	D		"	CLK 2	-2	-4	"
	I_{IH1}	3010	37	GND	2.7 V	5.5 V	GND				"							5.5 V	"	K1		50	µA
		"	38								"		GND	5.5 V	2.7 V	GND	5.5 V		"	K2		"	"
		"	39	GND	5.5 V	2.7 V	5.5 V				"							GND	"	J1		"	"
		"	40								"		5.5 V	2.7 V	5.5 V	GND	GND		"	J2		"	"
	I_{IH5}	"	41	GND	5.5 V	5.5 V	GND				"							5.5 V	"	K1		1	mA
		"	42								"		GND	5.5 V	5.5 V	GND	5.5 V		"	K2		"	"
		"	43	GND	5.5 V	5.5 V	5.5 V				"							GND	"	J1		"	"
		"	44								"		5.5 V	5.5 V	5.5 V	GND	GND		"	J2		"	"

See footnotes at end of device type 02.

TABLE III. Group A inspection for d for device type 02 - Continued.
Terminal conditions (pins not designated may be high ≥ 2.0 V, low ≤ 0.8 V, or open).

Subgroup	Symbol	MIL-STD-883 method	Cases E,F Test no.	1 CLK 1	2 K1	3 J1	4 PRE 1	5 Q1	6 $\overline{Q1}$	7 $\overline{Q2}$	8 GND	9 Q2	10 PRE 2	11 J2	12 K2	13 CLK 2	14 CLR 2	15 CLR 1	16 V_{CC}	Measured terminal	Limits Min	Limits Max	Unit
1 T_C = +25°C	I_{IH2}	3010	45	GND	5.5 V	GND	D				GND							2.7 V	5.5 V	CLR 1		100	µA
	I_{IH2}	"	46								"		D	GND	5.5 V	GND	2.7 V		"	CLR 2		100	µA
	I_{IH5}	"	47	GND	5.5 V	GND	D				"							5.5 V	"	CLR 1		1	mA
	I_{IH5}	"	48								"		D	GND	5.5 V	GND	5.5 V		"	CLR 2		1	mA
	I_{IH3}	"	49	GND	GND	5.5 V	2.7 V				"							D	"	PRE 1		100	µA
	I_{IH3}	"	50								"		2.7 V	5.5 V	GND	GND	D		"	PRE 2		100	µA
	I_{IH5}	"	51	GND	GND	5.5 V	5.5 V				"							D	"	PRE 1		1	mA
	I_{IH5}	"	52								"		5.5 V	5.5 V	GND	GND	D		"	PRE 2		1	mA
	I_{IH4}	"	53	2.7 V	GND	GND	GND				"							GND	"	CLK 1		100	µA
	I_{IH4}	"	54								"		GND	GND	GND	2.7 V	GND		"	CLK 2		100	µA
	I_{IH5}	"	55	5.5 V	GND	GND	GND				"							GND	"	CLK 1		1	mA
	I_{IH5}	"	56								"		GND	GND	GND	5.5 V	GND		"	CLK 2		1	"
	I_{OS}	3011	57	5.5 V	5.5 V	5.5 V	GND	GND			"							5.5 V	"	Q1	-40	-100	"
		"	58								"	GND	GND	5.5 V	5.5 V	5.5 V	5.5 V		"	Q2	"	9/	"
		"	59	5.5 V	5.5 V	5.5 V	5.5 V		GND		"							GND	"	$\overline{Q1}$	"	"	"
		"	60							GND	"		5.5 V	5.5 V	5.5 V	5.5 V	GND		"	$\overline{Q2}$	"	"	"
	I_{CC}	3005	61	5.5 V	5.5 V	5.5 V	GND				"		GND	5.5 V	5.5 V	5.5 V	5.5 V	5.5 V	"	V_{CC}		50	"
	I_{CC}	3005	62	5.5 V	5.5 V	5.5 V	5.5 V				"		5.5 V	5.5 V	5.5 V	5.5 V	GND	GND	"	V_{CC}		50	"
	I_{CEX}		63	C	GND	5.5 V	GND	5.5 V			"							5.5 V	"	Q1		250	µA
			64								"	5.5 V	GND	5.5 V	GND	C	5.5 V		"	Q2		"	"
			65	C	5.5 V	GND	5.5 V		5.5 V		"							GND	"	$\overline{Q1}$		"	"
			66							5.5 V	"		5.5 V	GND	5.5 V	C	GND		"	$\overline{Q2}$		"	"
2	Same tests, terminal conditions, limits as for subgroup 1, except T_C = +125°C, V_{IC} tests are omitted. $V_{OL(max)}$ = 0.45 V, V_{IL} = 0.7 V.																						
3	Same tests, terminal conditions, limits as for subgroup 1, except T_C = -55°C and V_{IC} tests are omitted.																						
7 1/ 2/ T_C = +25°C			67	B	B	A	A	L	H	H	GND	L	A	A	B	B	B	B	4.5 V	All outputs	H or L 3/ as shown	Vdc
			68	A	"	"	"	"	"	"	"	"	"	"	"	A	"	"	"	"	"	"
			69	B	"	"	"	"	"	"	"	"	"	"	"	B	"	"	"	"	"	"
			70	B	A	B	B	H	L	L	"	H	B	B	A	B	A	A	"	"	"	"
			71	A	"	"	"	"	"	"	"	"	"	"	"	A	"	"	"	"	"	"
			72	B	"	"	"	"	"	"	"	"	"	"	"	B	"	"	"	"	"	"
			73	"	B	"	A	L	H	H	"	L	A	"	B	"	B	B	"	"	"	"
			74	"	"	"	"	"	"	"	"	"	"	"	"	"	A	A	"	"	"	"
			75	A	"	"	"	"	"	"	"	"	"	"	"	A	"	"	"	"	"	"
			76	B	"	"	"	"	"	"	"	"	"	"	"	B	"	"	"	"	"	"
			77	"	"	"	B	H	L	L	"	H	B	"	"	"	"	"	"	"	"	"
			78	"	"	"	A	"	"	"	"	"	A	"	"	"	"	"	"	"	"	"
			79	A	"	"	"	"	"	"	"	"	"	"	"	A	"	"	"	"	"	"
			80	B	"	"	"	"	"	"	"	"	"	"	"	B	"	"	"	"	"	"

See footnotes at end of device type 02.

TABLE III. Group A inspection for d for device type 02 - Continued.
Terminal conditions (pins not designated may be high ≥ 2.0 V, low ≤ 0.8 V, or open).

Subgroup	Symbol	MIL-STD-883 method	Cases E,F Test no.	1 CLK 1	2 K1	3 J1	4 PRE 1	5 Q1	6 $\overline{Q1}$	7 $\overline{Q2}$	8 GND	9 Q2	10 PRE 2	11 J2	12 K2	13 CLK 2	14 CLR 2	15 CLR 1	16 V_{CC}	Measured terminal	Limits Min	Limits Max	Unit
7 1/ 2/ T_C = +25°C			81	B	B	A	A	L	H	H	GND	L	A	A	B	B	B	B	4.5 V	All outputs	H or L 3/ as shown		Vdc
			82	B	"	"	"	"	"	"	"	"	"	"	"	B	A	A	"	"	"		"
			83	A	"	"	"	"	"	"	"	"	"	"	"	A	"	"	"	"	"		"
			84	B	"	"	"	H	L	L	"	H	"	"	"	B	"	"	"	"	"		"
			85	"	A	B	B	"	"	"	"	"	B	B	A	"	"	"	"	"	"		"
			86	"	"	"	A	"	"	"	"	"	A	"	"	"	"	"	"	"	"		"
			87	A	"	"	"	"	"	"	"	"	"	"	"	A	"	"	"	"	"		"
			88	B	"	"	"	L	H	H	"	L	"	"	"	B	"	"	"	"	"		"
			89	A	"	A	B	H	"	"	"	H	B	A	"	A	B	B	"	"	"		"
			90	B	"	"	A	L	"	"	"	L	A	"	"	B	B	B	"	"	"		"
			91	B	"	"	"	"	"	"	"	"	"	"	"	B	A	A	"	"	"		"
			92	A	"	"	"	"	"	"	"	"	"	"	"	A	"	"	"	"	"		"
			93	B	"	"	"	H	L	L	"	H	"	"	"	B	"	"	"	"	"		"
			94	A	"	"	"	H	L	L	"	H	"	"	"	A	"	"	"	"	"		"
			95	B	"	"	"	L	H	H	"	L	"	"	"	B	"	"	"	"	"		"
8 1/ 2/	Same tests, terminal conditions and limits as for subgroup 7, except T_C = +125°C and -55°C.																						
9 T_C = +25°C	f_{MAX} 7/	Fig. 8	96	IN (A)	2.7 V	2.7 V	2.7 V	OUT	OUT	OUT	GND	OUT	2.7 V	2.7 V	2.7 V	IN (A)	2.7 V	2.7 V	5.0 V	Q1	80		MHz
		"	97								"								"	Q2	"		"
		"	98	IN (A)	2.7 V	2.7 V	2.7 V				"		2.7 V	2.7 V	2.7 V	IN (A)	2.7 V	2.7 V	"	$\overline{Q1}$	"		"
		"	99								"								"	$\overline{Q2}$	"		"
	t_{PLH1}	Fig. 7	100	2.7 V	2.7 V	2.7 V	IN (C)	OUT	OUT	OUT	"	OUT	IN (C)	2.7 V	2.7 V	2.7 V	IN (B)	IN (B)	"	PRE 1 to Q1	2.0	9.0	ns
		"	101								"								"	PRE 2 to Q2	"	"	"
		"	102	2.7 V	2.7 V	2.7 V	IN (B)				"		IN (B)	2.7 V	2.7 V	2.7 V	IN (C)	IN (C)	"	CLR 1 to $\overline{Q1}$	"	"	"
		"	103								"								"	CLR 2 to $\overline{Q2}$	"	"	"
	t_{PLH2}	Fig. 8	104	IN (A)	2.7 V	2.7 V	2.7 V	OUT	OUT	OUT	"	OUT	2.7 V	2.7 V	2.7 V	IN (A)	E	E	"	CLK 1 to $\overline{Q1}$	"	"	"
		"	105								"								"	CLK 2 to $\overline{Q2}$	"	"	"
		"	106	IN (A)	2.7 V	2.7 V	E				"		E	2.7 V	2.7 V	IN (A)	2.7 V	2.7 V	"	CLK 1 to Q1	"	"	"
		"	107								"								"	CLK 2 to Q2	"	"	"
	t_{PHL3}	Fig. 7	108	2.7 V	2.7 V	2.7 V	IN (C)	OUT	OUT	OUT	"	OUT	IN (C)	2.7 V	2.7 V	2.7 V	IN (B)	IN (B)	"	PRE 1 to $\overline{Q1}$	"	"	"
		"	109								"								"	PRE 2 to $\overline{Q2}$	"	"	"
		"	110	2.7 V	2.7 V	2.7 V	IN (B)				"		IN (B)	2.7 V	2.7 V	2.7 V	IN (C)	IN (C)	"	CLR 1 to Q1	"	"	"
		"	111								"								"	CLR 2 to Q2	"	"	"
	t_{PHL2}	Fig. 8	112	IN (A)	2.7 V	2.7 V	2.7 V	OUT	OUT	OUT	"	OUT	2.7 V	2.7 V	2.7 V	IN (A)	E	E	"	CLK 1 to $\overline{Q1}$	"	"	"
		"	113								"								"	CLK 2 to $\overline{Q2}$	"	"	"
		"	114	IN (A)	2.7 V	2.7 V	E				"		E	2.7 V	2.7 V	IN (A)	2.7 V	2.7 V	"	CLK 1 to Q1	"	"	"
		"	115								"								"	CLK 2 to Q2	"	"	"
	t_{SETUP} (L)	Fig. 9	116	IN (A)	2.7 V	IN (D)	E	OUT	OUT	OUT	"	OUT	E	IN (D)	2.7 V	IN (A)	2.7 V	2.7 V	"	Q1	8/		
		"	117								"								"	Q2	"		
		"	118	IN (A)	IN (D)	2.7 V	2.7 V				"		2.7 V	2.7 V	IN (D)	IN (A)	E	E	"	$\overline{Q1}$	"		
		"	119								"								"	$\overline{Q2}$	"		
	t_{SETUP} (H)	"	120	IN (A)	2.7 V	IN (E)	2.7 V	OUT	OUT	OUT	"	OUT	2.7 V	IN (E)	2.7 V	IN (A)	E	E	"	Q1	"		
		"	121								"								"	Q2	"		
		"	122	IN (A)	IN (E)	2.7 V	E				"		E	2.7 V	IN (E)	IN (A)	2.7 V	2.7 V	"	$\overline{Q1}$	"		
		"	123								"								"	$\overline{Q2}$	"		

See footnotes at end of device type 02.

TABLE III. Group A inspection for d for device type 02 - Continued.
Terminal conditions (pins not designated may be high ≥ 2.0 V, low ≤ 0.8 V, or open).

Subgroup	Symbol	MIL-STD-883 method	Cases E,F Test no.	1 CLK 1	2 K1	3 J1	4 PRE 1	5 Q1	6 $\overline{Q1}$	7 $\overline{Q2}$	8 GND	9 Q2	10 PRE 2	11 J2	12 K2	13 CLK 2	14 CLR 2	15 CLR 1	16 V_{CC}	Measured terminal	Limits Min	Limits Max	Unit
9 T_C = +25°C	t_{HOLD} (L)	Fig. 9	124	IN (A)	2.7 V	IN (F)	E	OUT			GND							2.7 V	5.0 V	Q1	8/		
		"	125								"	OUT	E	IN (F)	2.7 V	IN (A)	2.7 V		"	Q2	"		
		"	126	IN (A)	IN (F)	2.7 V	2.7 V		OUT		"							E	"	$\overline{Q1}$	"		
		"	127							OUT	"		2.7 V	2.7 V	IN (F)	IN (A)	E		"	$\overline{Q2}$	"		
	t_{HOLD} (H)	"	128	IN (A)	2.7 V	IN (G)	2.7 V	OUT			"							E	"	Q1	"		
		"	129								"	OUT	2.7 V	IN (G)	2.7 V	IN (A)	E		"	Q2	"		
		"	130	IN (A)	IN (G)	2.7 V	E		OUT		"							2.7 V	"	$\overline{Q1}$	"		
		"	131							OUT	"		E	2.7 V	IN (G)	IN (A)	2.7 V		"	$\overline{Q2}$	"		
10 T_C = +125°C	f_{MAX} 7/	Fig. 8	132-135	Same tests and terminal conditions as for subgroup 9, except T_C = +125°C and limits are as shown.																	60		MHz
	t_{PLH1}	Fig. 7	136-139																		2.0	11.0	ns
	t_{PLH2}	Fig. 8	140-143																		"	"	"
	t_{PHL3}	Fig. 7	144-149																		"	"	"
	t_{PHL2}	Fig. 8	148-151																		"	"	"
	t_{SETUP} (L)	Fig. 9	152-155																		8/		
	t_{SETUP} (H)	"	156-159																		"		
	t_{HOLD} (L)	"	160-163																		"		
	t_{HOLD} (H)	"	164-167																		"		
11	Same tests, terminal conditions, limits as for subgroup 10, except T_C = -55°C.																						

1/ Only a summary of attributes data is required.

2/ Inputs: A = 3.0 minimum, B = 0.0 V or GND.

3/ Outputs: L < 1.5 V, H > 1.5 V.

4/ C = Normal clock pulse.

5/ D = ---5.0 V ---0 V

6/ E = Normal input conditioning is 5.0 V, however, momentary logic "0" may be applied to input for synchronizing test equipment and preconditioning device under test.

7/ f_{MAX}, minimum limit specified is the frequency of the input pulse. The output frequency shall be one-half of the input frequency.

8/ Setup and hold time functionally may be verified by separate tests from propagation delay tests by monitoring the outputs at specified setup and hold conditions.

9/ For circuit B, $I_{OS(max)}$ is -110 mA.

TABLE III. Group A inspection for device type 03.
Terminal conditions (pins not designated may be high ≥ 2.0 V, low ≤ 0.8 V, or open).

Subgroup	Symbol	MIL-STD-883 method	Cases A, B, C, D	1	2	3	4	5	6	7	8	9	10	11	12	13	14	Measured terminal	Limits		Unit
			Test no.	CLK 1	K1	J1	PRE 1	Q1	$\overline{Q1}$	GND	$\overline{Q2}$	Q2	PRE 2	J2	K2	CLK 2	V_{CC}		Min	Max	
T_C = +25°C [1]	V_{OH}	3005	1	C	0.8 V	2.0 V	2.0 V	-1 mA		GND		-1 mA	2.0 V	2.0 V	0.8 V	C	4.5 V	Q1	2.5		V
		"	2		2.0 V	0.8 V	2.0 V		-1 mA	"			2.0 V	0.8 V	2.0 V	C	"	Q2	"		"
		"	3	C				-1 mA		"	-1 mA						"	$\overline{Q1}$	"		"
		"	4				0.8 V			"							"	$\overline{Q2}$	"		"
		"	5							"		-1 mA					"	Q1	"		"
		"	6							"			0.8 V				"	Q2	"		"
	V_{OL}	3007	7	C	0.8 V	2.0 V	2.0 V		20 mA	"			2.0 V	2.0 V	0.8 V	C	"	$\overline{Q1}$		0.5	"
		"	8		2.0 V	0.8 V	2.0 V	20 mA		"	20 mA						"	$\overline{Q2}$		"	"
		"	9	C						"		20 mA	2.0 V	0.8 V	2.0 V	C	"	Q1		"	"
		"	10				0.8 V		20 mA	"			0.8 V				"	Q2		"	"
		"	11							"	20 mA						"	$\overline{Q1}$		"	"
		"	12							"							"	$\overline{Q2}$		"	"
	V_{IC}		13	-18 mA	-18 mA	-18 mA	-18 mA			"			-18 mA	-18 mA	-18 mA	-18 mA	"	CLK 1		-1.2	"
			14							"							"	K1		"	"
			15							"							"	J1		"	"
			16							"							"	PRE 1		"	"
			17							"							"	PRE 2		"	"
			18							"							"	J2		"	"
			19							"							"	K2		"	"
			20							"							"	CLK 2		"	"
	I_{IL1}	3009	21	5.5 V	0.5 V	GND	D			"			D	GND	0.5 V	5.5 V	5.5 V	K1	-.7	-1.6	mA
		"	22		5.5 V	0.5 V	5.5 V			"							"	K2	"	"	"
		"	23	D						"			5.5 V	0.5 V	5.5 V	D	"	J1	"	"	"
		"	24							"							"	J2	"	"	"
	I_{IL3}	"	25	5.5 V	5.5 V	5.5 V	0.5 V			"			0.5 V	5.5 V	5.5 V	5.5 V	"	PRE 1	-0.8	-6.0	"
	I_{IL3}	"	26							"							"	PRE 2	-0.8	-6.0	"
	I_{IL4}	"	27	0.5 V	5.5 V	5.5 V	D			"			D	5.5 V	5.5 V	0.5 V	"	CLK 1	-2.0	-4.0	"
	I_{IL4}	"	28							"							"	CLK 2	-2.0	-4.0	"
	I_{IH1}	3010	29	GND	2.7 V	GND	GND			"			GND	GND	2.7 V	GND	"	K1		50	μA
		"	30		GND	2.7 V	5.5 V			"							"	K2		"	"
		"	31	C						"			5.5 V	2.7 V	GND	C	"	J1		"	"
		"	32							"							"	J2		"	"
	I_{IH4}	"	33	2.7 V	GND	GND	GND			"			GND	GND	GND	2.7 V	"	CLK 1		100	"
	I_{IH4}	"	34							"							"	CLK 2		"	"
	I_{IH3}	"	35	GND	GND	5.5 V	2.7 V	F 7/		"		F	2.7 V	5.5 V	GND	GND	"	PRE 1		"	"
	I_{IH3}	"	36							"							"	PRE 2		"	"

See footnotes at end of device type 03.

TABLE III. Group A inspection for device type 03 - Continued.
Terminal conditions (pins not designated may be high ≥ 2.0 V, low ≤ 0.8 V, or open).

Subgroup	Symbol	MIL-STD-883 method	Cases A, B, C, D	1	2	3	4	5	6	7	8	9	10	11	12	13	14	Measured terminal	Limits		Unit
			Test no.	CLK 1	K1	J1	PRE 1	Q1	$\overline{Q1}$	GND	$\overline{Q2}$	Q2	PRE 2	J2	K2	CLK 2	V_{CC}		Min	Max	
1 T_C = +25°C	I_{IH5}	3010	37	GND	5.5 V	GND	GND			GND							5.5 V	K1		1.0	mA
		"	38							"			GND	GND	5.5 V	GND	"	K2		"	"
		"	39	C	GND	5.5 V	5.5 V			"							"	J1		"	"
		"	40							"			5.5 V	5.5 V	GND	C	"	J2		"	"
		"	41	5.5 V	GND	GND	GND			"							"	CLK 1		"	"
		"	42							"			GND	GND	GND	5.5 V	"	CLK 2		"	"
		"	43	GND	GND	5.5 V	5.5 V	F		"		F	5.5 V	5.5 V	GND	GND	"	PRE 1		"	"
		"	44							"							"	PRE 2		"	"
	I_{OS}	3011	45				GND	GND		"							"	Q1	-40	-100 10/	"
		"	46							"		GND	GND				"	Q2	-40	-100	"
		"	47	C	5.5 V	GND	5.5 V	GND	2.25 V	"							"	$\overline{Q1}$	-20	-50	"
		"	48							"	2.25 V	GND	5.5 V	GND	5.5 V	C	"	$\overline{Q2}$	-20	-50	"
	I_{CC}	3005	49	GND	GND	GND	GND			"			GND	GND	GND	GND	"	V_{CC}		50	"
	I_{CC}	3005	50	C	5.5 V	GND	5.5 V			"			5.5 V	GND	5.5 V	C	"	V_{CC}		50	"
	I_{CEX}		51	C	GND	5.5 V	GND	5.5 V		"							"	Q1		150	μA
			52							"		5.5 V	GND	5.5 V	GND	C	"	Q2		"	"
			53	C	5.5 V	GND	5.5 V	GND	5.5 V	"							"	$\overline{Q1}$		"	"
			54							"	5.5 V	GND	5.5 V	GND	5.5 V	C	"	$\overline{Q2}$		"	"
2	Same tests, terminal conditions and limits as for subgroup 1, except T_C = +125°C, V_{IC} tests are omitted. $V_{OL(max)}$ = 0.45 V, V_{IL} = 0.7 V.																				
3	Same tests, terminal conditions and limits as for subgroup 1, except T_C = -55°C and V_{IC} tests are omitted.																				
7 1/ 2/ T_C = +25°C			55	B	A	B	B	H	L	GND	L	H	B	B	B	B	4.5 V	All outputs	H or L 3/ as shown		Vdc
			56	A	"	"	"	"	"	"	"	"	"	"	"	"	"	"	"	"	"
			57	B	"	"	"	"	"	"	"	"	"	"	"	"	"	"	"	"	"
			58	B	"	"	A	"	"	"	"	"	"	"	"	"	"	"	"	"	"
			59	A	"	"	"	"	"	"	"	"	"	"	"	"	"	"	"	"	"
			60	B	"	"	"	L	H	"	"	"	"	"	"	"	"	"	"	"	"
			61	B	B	A	"	"	"	"	"	"	"	"	"	"	"	"	"	"	"
			62	A	"	"	"	"	"	"	"	"	"	"	"	"	"	"	"	"	"
			63	B	"	"	"	H	L	"	"	"	"	"	"	A	"	"	"	"	"
			64	"	"	B	B	"	"	"	"	"	"	"	"	"	"	"	"	"	"
			65	"	"	"	"	"	"	"	"	"	A	"	"	A	"	"	"	"	"
			66	"	"	"	"	"	"	"	"	"	"	"	"	B	"	"	"	"	"
			67	"	"	"	"	"	"	"	H	L	"	A	B	B	"	"	"	"	"
			68	"	"	"	"	"	"	"	"	"	"	"	"	A	"	"	"	"	"
			69	"	"	"	"	"	"	"	"	"	"	"	"	B	"	"	"	"	"
			70	"	"	"	"	"	"	"	L	H	B	B	"	"	"	"	"	"	"
			71	"	"	"	"	"	"	"	"	"	A	"	"	A	"	"	"	"	"
			72	"	"	"	A	"	"	"	"	"	"	"	"	B	"	"	"	"	"
			73	A	"	"	"	"	"	"	"	"	"	A	A	B	"	"	"	"	"
			74	B	"	"	"	"	"	"	"	"	"	"	"	A	"	"	"	"	"
			75	B	A	A	"	"	"	"	"	"	"	"	"	B	"	"	"	"	"
			76	A	"	"	"	L	H	"	H	L	"	B	B	B	"	"	"	"	"
			77	B	"	"	"	"	"	"	"	"	"	"	"	A	"	"	"	"	"
			78	B	B	B	"	"	"	"	"	"	"	"	"	B	"	"	"	"	"
			79	A	"	"	"	"	"	"	"	"	"	A	A	B	"	"	"	"	"
			80	B	"	"	A	"	"	"	"	"	"	"	"	A	"	"	"	"	"
			81	B	A	A	"	"	"	"	"	"	"	"	"	B	"	"	"	"	"
			82	A	"	"	"	H	L	"	L	H	"	"	"		"	"	"	"	"
			83	B	"	"	"														

See footnotes at end of device type 03.

TABLE III. Group A inspection for device type 03 - Continued.
Terminal conditions (pins not designated may be high ≥ 2.0 V, low ≤ 0.8 V, or open).

Subgroup	Symbol	MIL-STD-883 method	Cases A, B, C, D	1	2	3	4	5	6	7	8	9	10	11	12	13	14	Measured terminal	Limits		Unit
			Test no.	CLK 1	K1	J1	PRE 1	Q1	$\overline{Q1}$	GND	$\overline{Q2}$	Q2	PRE 2	J2	K2	CLK 2	V_{CC}		Min	Max	
8 1/ 2/	Same tests, terminal conditions and limits as for subgroup 7, except T_C = +125°C and -55°C.																				
9 T_C = +25°C	f_{MAX} 8/	Fig. 11	84	IN (B)	2.7 V	2.7 V	2.7 V	OUT		GND		OUT	2.7 V	2.7 V	2.7 V	IN (B)	5.0 V	Q1	80		MHz
		"	85							"							"	Q2	"		"
		"	86	IN (B)	2.7 V	2.7 V	2.7 V		OUT	"	OUT		2.7 V	2.7 V	2.7 V	IN (B)	"	$\overline{Q1}$	"		"
		"	87							"							"	$\overline{Q2}$	"		"
	t_{PLH1}	Fig. 10	88	IN (C)	2.7 V	GND	IN (D)	OUT		"		OUT	IN (D)	GND	2.7 V	IN (C)	"	PRE 1 to Q1	2.0	9.0	ns
	t_{PLH1}	Fig. 10	89							"							"	PRE 2 to Q2	"	"	"
	t_{PLH2}	Fig. 11	90	IN (B)	2.7 V	2.7 V	E	OUT		"		OUT	E	2.7 V	2.7 V	IN (B)	"	CLK 1 to Q1	"	"	"
	t_{PLH2}	"	91							"							"	CLK 2 to Q2	"	"	"
	t_{PLH3}	"	92	IN (B)	2.7 V	2.7 V	E		OUT	"	OUT		E	2.7 V	2.7 V	IN (B)	"	CLK 1 to $\overline{Q1}$	"	"	"
	t_{PLH3}	"	93							"							"	CLK 2 to $\overline{Q2}$	"	"	"
	t_{PHL1}	Fig. 10	94	IN (C)	2.7 V	GND	IN (D)		OUT	"	OUT		IND (D)	GND	2.7 V	IN (C)	"	PRE 1 to $\overline{Q1}$	"	"	"
	t_{PHL1}	Fig. 10	95							"							"	PRE 2 to $\overline{Q2}$	"	"	"
	t_{PHL2}	Fig. 11	96	IN (B)	2.7 V	2.7 V	E		OUT	"	OUT		E	2.7 V	2.7 V	IN (B)	"	CLK 1 to $\overline{Q1}$	"	"	"
	t_{PHL2}	"	97							"							"	CLK 2 to $\overline{Q2}$	"	"	"
	t_{PHL3}	"	98	IN (B)	2.7 V	2.7 V	E	OUT		"		OUT	E	2.7 V	2.7 V	IN (B)	"	CLK 1 to Q1	"	"	"
	t_{PHL3}	"	99							"							"	CLK 2 to Q2	"	"	"
	t_{SET} (H)	Fig. 12	100	IN (E)	2.7 V	IN (F)	E	OUT		"							"	Q1	9/		
		"	101							"		OUT	E	IN (F)	2.7 V	IN (E)	"	Q2	"		
		"	102	IN (E)	IN (F)	2.7 V	2.7 V	OUT		"							"	$\overline{Q1}$	"		
		"	103							"		OUT	2.7 V	2.7 V	IN (F)	IN (E)	"	Q2	"		
	t_{SET} (L)	"	104	IN (E)	2.7 V	IN (G)	E	OUT		"							"	Q1	"		
		"	105							"		OUT	E	IN (G)	2.7 V	IN (E)	"	Q2	"		
		"	106	IN (E)	IN (H)	2.7 V	E	OUT		"							"	$\overline{Q1}$	"		
		"	107							"		OUT	E	2.7 V	IN (H)	IN (E)	"	Q2	"		
	t_{HOLD} (H)	Fig. 13	108	IN (E)	2.7 V	IN (J)	E	OUT		"							"	Q1	"		
		"	109							"		OUT	E	IN (J)	2.7 V	IN (E)	"	Q2	"		
		"	110	IN (E)	IN (K)	GND	E	OUT		"							"	$\overline{Q1}$	"		
		"	111							"		OUT	E	GND	IN (K)	IN (E)	"	Q2	"		
	t_{HOLD} (L)	"	112	IN (E)	2.7 V	IN (L)	E	OUT		"							"	Q1	"		
		"	113							"		OUT	E	IN (L)	2.7 V	IN (E)	"	Q2	"		
		"	114	IN (E)	IN (L)	2.7 V	2.7 V	OUT		"							"	$\overline{Q1}$	"		
		"	115							"		OUT	2.7 V	2.7 V	IN (L)	IN (E)	"	Q2	"		

See footnotes at end of device type 03.

TABLE III. Group A inspection for device type 03 - Continued.
Terminal conditions (pins not designated may be high ≥ 2.0 V, low ≤ 0.8 V, or open).

Subgroup	Symbol	MIL-STD-883 method	Cases A, B, C, D	1	2	3	4	5	6	7	8	9	10	11	12	13	14	Measured terminal	Limits		Unit
			Test no.	CLK 1	K1	J1	PRE 1	Q1	$\overline{Q}1$	GND	$\overline{Q}2$	Q2	PRE 2	J2	K2	CLK 2	V_{CC}		Min	Max	
10 T_C = +125°C	f_{MAX} 8/	Fig. 11	116-119	Same tests and terminal conditions as for subgroup 9, except T_C = +125°C and limits are as shown.															60		MHz
	t_{PLH1}	Fig. 10	120-121																2.0	11.0	ns
	t_{PLH2}	Fig. 11	122-123																"	"	"
	t_{PLH3}	Fig. 11	124-125																"	"	"
	t_{PHL1}	Fig. 10	125-127																"	"	"
	t_{PHL2}	Fig. 11	128-129																"	"	"
	t_{PHL3}	Fig. 11	130-131																"	"	"
	$t_{SET(H)}$	Fig. 12	132-135																9/		
	$t_{SET(L)}$	Fig. 12	136-139																"		
	$t_{HOLD(H)}$	Fig. 13	140-143																"		
	$t_{HOLD(L)}$	Fig. 13	144-147																"		
11	Same tests, terminal conditions and limits as subgroup 10, except T_C = -55°C.																				

1/ Only a summary of attributes data is required.

2/ Inputs: A = 3.0 V minimum, B = 0.0 V or GND.

3/ Outputs: H > 1.5 V, L < 1.5 V.

4/ C = Normal clock pulse.

5/ D = Momentary condition: 5.0 V to GND to 5.0 V before measurement is made (for subgroups 9, 10, 11, D occurs prior to other input pulses).

6/ E = Normal input conditioning is 2.7 V, however, momentary logic "0" may be applied to input for synchronizing test equipment and for preconditioning the device.

7/ F = Momentary GND, then open.

8/ f_{MAX}, minimum limit specified is the frequency of the input pulse. The output frequency shall be one-half of the input frequency.

9/ Monitor output to verify functionally with $t_{(SET)}$ and $t_{(HOLD)}$ limit conditions as shown on figures 12 and 13.

10/ For circuit B, $I_{OS(max)}$ is -110 mA.

TABLE III. Group A inspection for device type 04.
Terminal conditions (pins not designated may be high ≥ 2.0 V, low ≤ 0.8 V, or open).

Subgroup	Symbol	MIL-STD-883 method	Cases A, B, C, D	1	2	3	4	5	6	7	8	9	10	11	12	13	14	Measured terminal	Limits		Unit
			Test no.	CLR	K1	J1	PRE 1	Q1	$\overline{Q1}$	GND	$\overline{Q2}$	Q2	PRE 2	J2	K2	CLK	V_{CC}		Min	Max	
T_C = +25°C[1]	V_{OH}	3006	1	2.0 V	0.8 V	2.0 V	2.0 V	-1 mA		GND						C	4.5 V	Q1	2.5		V
		"	2	"	2.0 V	0.8 V	2.0 V		-1 mA	"		-1 mA	2.0 V	2.0 V	0.8 V	"	"	Q2	"		"
		"	3	"			0.8 V	-1 mA		"	-1 mA		2.0 V	0.8 V	2.0 V	"	"	$\overline{Q1}$	"		"
		"	4	"					-1 mA	"		-1 mA	0.8 V			5.5 V	"	$\overline{Q2}$	"		"
		"	5	"			2.0 V			"			2.0 V			"	"	Q1	"		"
		"	6	"						"						"	"	Q2	"		"
		"	7	0.8 V						"						"	"	$\overline{Q1}$	"		"
		"	8	0.8 V						"						"	"	$\overline{Q2}$	"		"
	V_{OL}	3007	9	2.0 V	0.8 V	2.0 V	2.0 V		20 mA	"						C	"	$\overline{Q1}$		0.5	"
		"	10	"						"	20 mA		2.0 V	2.0 V	0.8 V	"	"	$\overline{Q2}$		"	"
		"	11	"	2.0 V	0.8 V	2.0 V	20 mA		"		20 mA	2.0 V	0.8 V	2.0 V	"	"	Q1		"	"
		"	12	"					20 mA	"			0.8 V			5.5 V	"	Q2		"	"
		"	13	"			0.8 V			"	20 mA					"	"	$\overline{Q1}$		"	"
		"	14	"						"			2.0 V			"	"	$\overline{Q2}$		"	"
		"	15	0.8 V			2.0 V	20 mA		"		20 mA				"	"	Q1		"	"
		"	16	0.8 V						"						"	"	Q2		"	"
	V_{IC}		17	-18 mA	-18 mA	-18 mA	-18 mA			"			-18 mA	-18 mA	-18 mA	-18 mA	"	CLR		-1.2	"
			18							"							"	K1		"	"
			19							"							"	J1		"	"
			20							"							"	PRE 1		"	"
			21							"							"	PRE 2		"	"
			22							"							"	J2		"	"
			23							"							"	K2		"	"
			24							"							"	CLK		"	"
	I_{IL1}	3009	25	5.5 V	0.5 V	GND	D			"			D	GND	0.5 V	5.5 V	5.5 V	K1	-0.7	-1.6	mA
		"	26	5.5 V						"						"	"	K2	"	"	"
		"	27	D	GND	0.5 V	5.5 V			"			5.5 V	0.5 V	5.5 V	"	"	J1	"	"	"
		"	28	D						"						"	"	J2	"	"	"
	I_{IL3}	"	29	5.5 V	5.5 V	5.5 V	0.5 V			"			0.5 V	5.5 V	5.5 V	"	"	PRE 1	-0.8	-6.0	"
		"	30	5.5 V						"						"	"	PRE 2	-0.8	-6.0	"
	I_{IL2}	"	31	0.5 V	5.5 V	5.5 V	5.5 V			"			5.5 V	"	"	"	"	CLR	-1.6	-12.0	"
	I_{IL4}	"	32	D	5.5 V	5.5 V	5.5 V			"			5.5 V	"	"	0.5 V	"	CLK	-4.4	-8.0	"
	I_{IH1}	3010	33	GND	2.7 V	GND	GND			"			GND	GND	2.7 V	GND	"	K1		50	μA
		"	34	"						"						"	"	K2		"	"
		"	35	"	GND	2.7 V	GND			"			GND	2.7 V	GND	"	"	J1		"	"
		"	36	"						"						"	"	J2		"	"
	I_{IH3}	"	37	"	GND	GND	2.7 V			"			2.7 V	GND	GND	"	"	PRE 1		100	"
		"	38	"						"						"	"	PRE 2		100	"
	I_{IH2}	"	39	2.7 V	GND	GND	GND			"			GND	"	"	"	"	CLR		200	"
	I_{IH4}	"	40	GND	GND	GND	GND			"			GND	"	"	2.7 V	"	CLK		200	"

See footnotes at end of device type 04.

TABLE III. Group A inspection for device type 04 - Continued.
Terminal conditions (pins not designated may be high ≥ 2.0 V, low ≤ 0.8 V, or open).

Subgroup	Symbol	MIL-STD-883 method	Cases A, B, C, D	1	2	3	4	5	6	7	8	9	10	11	12	13	14	Measured terminal	Limits		Unit
			Test no.	CLR	K1	J1	PRE 1	Q1	$\overline{Q1}$	GND	$\overline{Q2}$	Q2	PRE 2	J2	K2	CLK	V_{CC}		Min	Max	
1 T_C = +25°C	I_{IH5}	3010	41	GND	5.5 V	GND	GND			GND						GND	5.5 V	K1		1.0	mA
		"	42	"						"			GND	GND	5.5 V	"	"	K2		"	"
		"	43	"	GND	5.5 V	GND			"						"	"	J1		"	"
		"	44	"						"			GND	5.5 V	GND	"	"	J2		"	"
		"	45	"	GND	GND	5.5 V			"						"	"	PRE 1		"	"
		"	46	"						"			5.5 V	GND	GND	"	"	PRE 2		"	"
		"	47	5.5 V	GND	GND	GND			"			GND	"	"	"	"	CLR		"	"
		"	48	GND	GND	GND	GND			"			GND	"	"	5.5 V	"	CLK		"	"
	I_{OS}	3011	49	5.5 V			GND	GND		"							"	Q1	-40	-100	"
		"	50	5.5 V						"		GND	GND				"	Q2	"	9/	"
		"	51	GND			5.5 V		GND	"							"	$\overline{Q1}$	"	"	"
		"	52	GND						"	GND		5.5 V				"	$\overline{Q2}$	"	"	"
	I_{CC}	3005	53	5.5 V			GND			"			GND			GND	"	V_{CC}		50	"
		3005	54	GND			5.5 V			"			5.5 V			GND	"	V_{CC}		50	"
	I_{CEX}		55	5.5 V	GND	5.5 V	5.5 V	5.5 V		"			5.5 V	5.5 V	GND	C	"	Q1		250	μA
			56	"						"		5.5 V	"			"	"	Q2		"	"
			57	"	5.5 V	GND	5.5 V		5.5 V	"			"			"	"	$\overline{Q1}$		"	"
			58	"						"	5.5 V		5.5 V	GND	5.5 V	"	"	$\overline{Q2}$		"	"
2	Same tests, terminal conditions, limits as for subgroup 1, except T_C = +125°C, V_{IC} tests are omitted. $V_{OL(max)}$ = 0.45 V, V_{IL} = 0.7 V.																				
3	Same tests, terminal conditions, limits as for subgroup 1, except T_C = -55°C, and V_{IC} tests are omitted.																				
7 1/ 2/ T_C = +25°C			59	B	B	A	A	L	H	GND	H	L	A	A	B	A	4.5 V	All outputs	H or L 3/ as shown		Vdc
			60	"	"	"	"	"	"	"	"	"	"	"	"	B	"	"	"		"
			61	"	"	"	"	"	"	"	"	"	"	"	"	A	"	"	"		"
			62	A	"	"	"	"	"	"	L	H	B	B	"	A	"	"	"		"
			63	"	"	"	"	H	L	"	"	"	"	"	"	B	"	"	"		"
			64	"	"	"	"	"	"	"	"	"	"	"	"	A	"	"	"		"
			65	"	"	B	"	"	"	"	"	"	"	"	"	A	"	"	"		"
			66	"	"	"	"	"	"	"	"	"	"	"	"	B	"	"	"		"
			67	"	"	"	"	"	"	"	"	"	"	"	"	A	"	"	"		"
			68	"	A	"	"	"	"	"	"	"	"	"	"	A	"	"	"		"
			69	"	"	"	"	L	H	"	"	"	"	"	"	B	"	"	"		"
			70	"	"	"	"	L	H	"	"	"	"	"	"	A	"	"	"		"
			71	"	"	"	B	H	L	"	"	"	"	"	"	A	"	"	"		"
			72	"	"	"	B	H	L	"	"	"	"	"	"	B	"	"	"		"
			73	B	B	"	A	L	H	"	H	L	A	A	"	A	"	"	"		"
			74	A	"	"	B	H	L	"	H	L	"	"	"	A	"	"	"		"
			75	"	"	"	"	"	"	"	L	H	"	"	"	B	"	"	"		"
			76	"	"	"	"	"	"	"	"	"	"	"	"	A	"	"	"		"
			77	"	"	"	"	"	"	"	"	"	"	B	"	A	"	"	"		"
			78	"	"	"	"	"	"	"	"	"	"	"	"	B	"	"	"		"
			79	"	"	"	"	"	"	"	"	"	"	"	"	A	"	"	"		"
			80	"	"	"	"	"	"	"	"	"	"	"	A	A	"	"	"		"
			81	"	"	"	"	"	"	"	H	L	"	"	"	B	"	"	"		"
			82	"	"	"	"	"	"	"	H	L	"	"	"	A	"	"	"		"

See footnotes at end of device type 04.

TABLE III. Group A inspection for device type 04 - Continued.
Terminal conditions (pins not designated may be high ≥ 2.0 V, low ≤ 0.8 V, or open).

Subgroup	Symbol	MIL-STD-883 method	Cases A, B, C, D	1	2	3	4	5	6	7	8	9	10	11	12	13	14	Measured terminal	Limits		Unit
			Test no.	CLR	K1	J1	PRE 1	Q1	$\overline{Q1}$	GND	$\overline{Q2}$	Q2	PRE 2	J2	K2	CLK	V_{CC}		Min	Max	
7 1/ 2/ T_C = +25°C			83	A	B	B	B	H	L	GND	L	H	B	B	A	A	4.5 V	All outputs	H or L 3/ as shown		Vdc
			84	A	B	B	"	"	L	"	L	"	"	B	"	B	"	"	"		"
			85	B	A	A	"	"	H	"	H	"	"	A	"	A	"	"	"		"
			86	B	B	B	A	L	"	"	"	L	A	B	B	"	"	"	"		"
			87	A	"	"	"	"	"	"	"	"	"	"	"	"	"	"	"		"
			88	"	"	"	"	"	"	"	"	"	"	"	"	B	"	"	"		"
			89	"	A	A	"	"	"	"	"	"	"	A	A	B	"	"	"		"
			90	"	"	"	"	"	"	"	"	"	"	"	"	A	"	"	"		"
			91	"	"	"	"	H	L	"	L	H	"	"	"	B	"	"	"		"
			92	"	B	B	"	"	"	"	"	"	"	B	B	B	"	"	"		"
			93	"	"	"	"	"	"	"	"	"	"	"	"	A	"	"	"		"
			94	"	"	"	"	"	"	"	"	"	"	"	"	B	"	"	"		"
			95	"	A	A	"	"	"	"	"	"	"	A	A	B	"	"	"		"
			96	"	"	"	"	"	"	"	"	"	"	"	"	A	"	"	"		"
			97	"	"	"	"	L	H	"	H	L	"	"	"	B	"	"	"		"
8 1/ 2/	Same tests, terminal conditions and limits as for subgroup 7, except T_C = +125°C and -55°C.																				
9 T_C = +25°C	f_{MAX} 7/	Fig. 8	98	2.7 V	2.7 V	2.7 V	2.7 V	OUT		GND			2.7 V	2.7 V	2.7 V	IN (A)	5.0 V	Q1	80		MHz
		"	99	"						"		OUT				"	"	Q2	"		"
		"	100	"	2.7 V	2.7 V	2.7 V		OUT	"	OUT		2.7 V	2.7 V	2.7 V	"	"	$\overline{Q1}$	"		"
		"	101	"						"						"	"	$\overline{Q2}$	"		"
	t_{PLH1}	"	102	IN (B)	2.7 V	2.7 V	IN (C)	OUT		"						2.7 V	"	PRE 1 to Q1	2.0	9.0	ns
		"	103	IN (B)						"		OUT	IN (C)	2.7 V	2.7 V	"	"	PRE 2 to Q2	"	"	"
		"	104	IN (C)	2.7 V	2.7 V	IN (B)		OUT	"						"	"	CLR to $\overline{Q1}$	"	"	"
		"	105	IN (C)						"	OUT		IN (B)	2.7 V	2.7 V	"	"	CLR to $\overline{Q2}$	"	"	"
	t_{PLH2}	Fig. 9	106	E	2.7 V	2.7 V	2.7 V		OUT	"						IN (A)	"	CLK to $\overline{Q1}$	"	"	"
		"	107	E						"	OUT		2.7 V	2.7 V	2.7 V	"	"	CLK to $\overline{Q2}$	"	"	"
		"	108	2.7 V	2.7 V	2.7 V	E	OUT		"						"	"	CLK to $\overline{Q1}$	"	"	"
		"	109	2.7 V						"		OUT	E	2.7 V	2.7 V	"	"	CLK to Q2	"	"	"
	t_{PHL3}	Fig. 8	110	IN (B)	2.7 V	2.7 V	IN (C)		OUT	"						2.7 V	"	PRE 1 to $\overline{Q1}$	"	"	"
		"	111	IN (B)						"	OUT		IN (C)	2.7 V	2.7 V	"	"	PRE 2 to $\overline{Q2}$	"	"	"
		"	112	IN (C)	2.7 V	2.7 V	IN (B)	OUT		"						"	"	CLR to $\overline{Q1}$	"	"	"
		"	113	IN (C)						"		OUT	IN (B)	2.7 V	2.7 V	"	"	CLR to $\overline{Q2}$	"	"	"
	t_{PHL2}	Fig. 9	114	E	2.7 V	2.7 V	2.7 V		OUT	"						IN (A)	"	CLK to $\overline{Q1}$	"	"	"
		"	115	E						"	OUT		2.7 V	2.7 V	2.7 V	"	"	CLK to $\overline{Q2}$	"	"	"
		"	116	2.7 V	2.7 V	2.7 V	E	OUT		"						"	"	CLK to $\overline{Q1}$	"	"	"
		"	117	"						"		OUT	E	2.7 V	2.7 V	"	"	CLK to Q2	"	"	"
	t_{SETUP} (L)	Fig. 10	118	"	GND	IN (D)	E	OUT		"						"	"	Q1	8/		
		"	119	"						"		OUT	E	IN (D)	GND	"	"	Q2	"		
		"	120	E	IN (D)	GND	2.7 V		OUT	"						"	"	$\overline{Q1}$	"		
		"	121	E						"	OUT		2.7 V	GND	IN (D)	"	"	$\overline{Q2}$	"		

See footnotes at end of device type 04.

TABLE III. Group A inspection for device type 04 - Continued.
Terminal conditions (pins not designated may be high ≥ 2.0 V, low ≤ 0.8 V, or open).

Subgroup	Symbol	MIL-STD-883 method	Cases A, B, C, D	1	2	3	4	5	6	7	8	9	10	11	12	13	14	Measured terminal	Limits Min	Limits Max	Unit
			Test no.	CLR	K1	J1	PRE 1	Q1	$\overline{Q1}$	GND	$\overline{Q2}$	Q2	PRE 2	J2	K2	CLK	V_{CC}				
9 T_C = +25°C	t_{SETUP} (H)	Fig. 10	122	E	GND	IN (E)	2.7 V	OUT		GND		OUT	2.7 V	IN (E)	GND	IN (A)	5.0 V	Q1	8/		
		"	123	E	IN (E)	GND	E		OUT	"	OUT		E	GND	IN (E)	"	"	Q2	"		
		"	124	2.7 V						"						"	"	$\overline{Q1}$	"		
		"	125	"						"						"	"	$\overline{Q2}$	"		
	t_{HOLD} (L)	"	126	"	GND	IN (F)	E	OUT		"		OUT	E	IN (F)	GND	"	"	Q1	"		
		"	127	"	IN (F)	GND	2.7 V		OUT	"	OUT		2.7 V	GND	IN (F)	"	"	Q2	"		
		"	128	E						"						"	"	$\overline{Q1}$	"		
		"	129	"						"						"	"	$\overline{Q2}$	"		
	t_{HOLD} (H)	"	130	"	GND	IN (G)	2.7 V	OUT		"		OUT	2.7 V	IN (G)	GND	"	"	Q1	"		
		"	131	"	IN (G)	GND	E		OUT	"	OUT		E	GND	IN (G)	"	"	Q2	"		
		"	132	2.7 V						"						"	"	$\overline{Q1}$	"		
		"	133	2.7 V						"						"	"	$\overline{Q2}$	"		
10 T_C = +125°C	f_{MAX} 7/	Fig. 8	134-137	Same tests and terminal conditions as for subgroup 9, except T_C = +125°C and limits are as shown.															60		MHz
	t_{PLH1}	Fig. 7	138-141																2.0	11.0	ns
	t_{PLH2}	Fig. 8	142-145																"	"	"
	t_{PHL3}	Fig. 7	146-149																"	"	"
	t_{PHL2}	Fig. 8	150-153																"	"	"
	t_{SET} (L)	Fig. 9	154-157																8/		
	t_{SET} (H)	"	158-161																"		
	t_{HOLD} (L)	"	162-165																"		
	t_{HOLD} (H)	"	166-169																"		
11	Same tests terminal conditions, and limits as for subgroup 10, except T_C = -55°C.																				

1/ Only a summary of attributes data is required.
2/ Inputs: A = 3.0 V minimum, B = 0.0 V or GND.
3/ Outputs: H > 1.5 V, L < 1.5 V.
4/ C = Normal clock pulse.
5/ D = Momentary condition: 5.0 V to momentary GND to 5.0 V, occurs before measurement is made (for subgroups 9, 10, and 11, D occurs prior to other input pulses).
6/ E = Normal input conditioning is 5.0 V, however, momentary logic "0" may be applied to the input for synchronizing test equipment and preconditioning the device.
7/ f_{MAX}, minimum limit specified is the frequency of the input pulse. The output frequency shall be one-half of the input frequency.
8/ Monitor output to verify functionality with $t_{(SETUP)}$ and $t_{(HOLD)}$ conditions as shown on figure 9.
9/ For circuit B, $I_{OS(max)}$ is -110 mA.

TABLE III. Group A inspection for device type 05.
Terminal conditions (pins not designated may be high ≥ 2.0 V, low ≤ 0.8 V, or open).

Subgroup	Symbol	MIL-STD-883 method	Cases E,F Test no.	1 CLR	2 Q1	3 D1	4 D2	5 Q2	6 D3	7 Q3	8 GND	9 CLK	10 Q4	11 D4	12 Q5	13 D5	14 D6	15 Q6	16 V_{CC}	Measured terminal	Limits Min	Limits Max	Unit
1 T_C = +25°C	V_{OH}	3006	1	D	-1 mA	2.0 V					GND	C							4.5 V	Q1	2.5		V
		"	2	"			2.0 V	-1 mA			"	"							"	Q2	"		"
		"	3	"					2.0 V	-1 mA	"	"							"	Q3	"		"
		"	4	"							"	"	-1 mA	2.0 V					"	Q4	"		"
		"	5	"							"	"			-1 mA	2.0 V			"	Q5	"		"
		"	6	"							"	"					2.0 V	-1 mA	"	Q6	"		"
	V_{OL}	3007	7	2.0 V	20 mA	0.8 V					"	"							"	Q1		0.5	"
		"	8	"			0.8 V	20 mA			"	"							"	Q2		"	"
		"	9	"					0.8 V	20 mA	"	"							"	Q3		"	"
		"	10	"							"	"	20 mA	0.8 V					"	Q4		"	"
		"	11	"							"	"			20 mA	0.8 V			"	Q5		"	"
		"	12	"							"	"					0.8 V	20 mA	"	Q6		"	"
	V_{IC}		13	-18 mA		-18 mA					"								"	CLR		-1.2	"
			14				-18 mA				"								"	D1		"	"
			15						-18 mA		"								"	D2		"	"
			16								"	-18 mA							"	D3		"	"
			17								"			-18 mA					"	CLK		"	"
			18								"					-18 mA			"	D4		"	"
			19								"						-18 mA		"	D5		"	"
			20								"								"	D6		"	"
	I_{IL1}	3009	21	0.5 V							"								5.5 V	CLR	-1.0	-2.0	mA
		"	22			0.5 V					"								"	D1	"	"	"
		"	23				0.5 V				"								"	D2	"	"	"
		"	24						0.5 V		"								"	D3	"	"	"
		"	25								"	0.5 V							"	CLK	"	"	"
		"	26								"			0.5 V					"	D4	"	"	"
		"	27								"					0.5 V			"	D5	"	"	"
		"	28								"						0.5 V		"	D6	"	"	"
	I_{IH1}	3010	29	2.7 V							"								"	CLR		50	µA
		"	30			2.7 V					"								"	D1		"	"
		"	31				2.7 V				"								"	D2		"	"
		"	32						2.7 V		"								"	D3		"	"
		"	33								"	2.7 V							"	CLK		"	"
		"	34								"			2.7 V					"	D4		"	"
		"	35								"					2.7 V			"	D5		"	"
		"	36								"						2.7 V		"	D6		"	"
	I_{IH5}	"	37	5.5 V							"								"	CLR		1.0	mA
		"	38			5.5 V					"								"	D1		"	"
		"	39				5.5 V				"								"	D2		"	"
		"	40						5.5 V		"								"	D3		"	"
		"	41								"	5.5 V							"	CLK		"	"
		"	42								"			5.5 V					"	D4		"	"
		"	43								"					5.5 V			"	D5		"	"
		"	44								"						5.5 V		"	D6		"	"
	I_{OS}	3011	45	5.5 V	GND	5.5 V					"	C							"	Q1	-40	-100	"
		"	46	"			5.5 V	GND			"	"							"	Q2	"	7/	"
		"	47	"					5.5 V	GND	"	"							"	Q3	"	"	"
		"	48	"							"	"	GND	5.5 V					"	Q4	"	"	"
		"	49	"							"	"			GND	5.5 V			"	Q5	"	"	"
		"	50	"							"	"					5.5 V	GND	"	Q6	"	"	"

See footnotes at end of device type 05.

TABLE III. Group A inspection for device type 05 - Continued.
Terminal conditions (pins not designated may be high ≥ 2.0 V, low ≤ 0.8 V, or open).

Subgroup	Symbol	MIL-STD-883 method	Cases E,F Test no.	1 CLR	2 Q1	3 D1	4 D2	5 Q2	6 D3	7 Q3	8 GND	9 CLK	10 Q4	11 D4	12 Q5	13 D5	14 D6	15 Q6	16 V_{CC}	Measured terminal	Limits Min	Limits Max	Unit
1 T_C = +25°C	I_{CC}	3005	51	5.5 V		5.5 V	5.5 V		5.5 V		GND	D		5.5 V		5.5 V	5.5 V		5.5 V	V_{CC}		144	mA
	I_{CEX}		52	D	5.5 V	5.5 V	5.5 V	5.5 V	5.5 V	5.5 V	"	C	5.5 V	5.5 V	5.5 V	5.5 V	5.5 V	5.5 V	"	Q1		250	µA
			53	"							"	"							"	Q2		"	"
			54	"							"	"							"	Q3		"	"
			55	"							"	"							"	Q4		"	"
			56	"							"	"							"	Q5		"	"
			57	"							"	"							"	Q6		"	"
2	Same tests, terminal conditions, limits as for subgroup 1, except T_C = +125°C, V_{IC} tests are omitted. $V_{OL(max)}$ = 0.45 V, V_{IL} = 0.7 V.																						
3	Same tests, terminal conditions, limits as for subgroup 1, except T_C = -55°C and V_{IC} tests are omitted.																						
7 1/ 2/ T_C = +25°C			58	B	L	A	A	L	A	L	GND	A	L	A	L	A	A	L	4.5 V	All outputs	H or L 3/ as shown	Vdc
			59	"	"	"	"	"	"	"	"	B	"	"	"	"	"	"	"	"	"	"
			60	"	"	"	"	"	"	"	"	A	"	"	"	"	"	"	"	"	"	"
			61	A	"	"	"	"	"	"	"	A	"	"	"	"	"	"	"	"	"	"
			62	"	"	"	"	"	"	"	"	B	"	"	"	"	"	"	"	"	"	"
			63	"	H	"	"	H	"	H	"	A	H	"	H	"	"	H	"	"	"	"
			64	"	"	B	B	"	B	"	"	A	"	B	"	B	B	"	"	"	"	"
			65	"	"	"	"	"	"	"	"	B	"	"	"	"	"	"	"	"	"	"
			66	"	L	"	"	L	"	L	"	A	"	"	L	"	"	L	"	"	"	"
			67	"	L	A	A	L	A	L	"	B	L	A	L	A	A	L	"	"	"	"
			68	"	H	"	"	H	"	H	"	A	H	"	H	"	"	H	"	"	"	"
			69	"	H	"	"	H	"	H	"	B	H	"	H	"	"	H	"	"	"	"
			70	B	L	"	"	L	"	L	"	B	L	"	L	"	"	L	"	"	"	"
8 1/ 2/	Same tests, terminal conditions and limits as for subgroup 7, except T_C = +125°C and -55°C.																						
9 T_C = +25°C	f_{MAX} 6/	Fig. 15	71	2.7 V	OUT	IN (B)	IN (B)	OUT	IN (B)	OUT	GND	IN (A)	OUT	IN (B)	OUT	IN (B)	IN (B)	OUT	5.0 V	Q1	75		MHz
		"	72	"							"	"							"	Q2	"		"
		"	73	"							"	"							"	Q3	"		"
		"	74	"							"	"							"	Q4	"		"
		"	75	"							"	"							"	Q5	"		"
		"	76	"							"	"							"	Q6	"		"
	t_{PLH1}	Fig. 16	77	"	OUT	IN (E)	IN (E)	OUT	IN (E)	OUT	"	IN (C)	OUT	IN (E)	OUT	IN (E)	IN (E)	OUT	"	CLK to Q1	2.0	14.0	ns
		"	78	"							"	"							"	CLK to Q2	"	"	"
		"	79	"							"	"							"	CLK to Q3	"	"	"
		"	80	"							"	"							"	CLK to Q4	"	"	"
		"	81	"							"	"							"	CLK to Q5	"	"	"
		"	82	"							"	"							"	CLK to Q6	"	"	"
	t_{PLH2}	Fig. 14	83	IN (F)	OUT	2.7 V	2.7 V	OUT	2.7 V	OUT	"	IN (G)	OUT	2.7 V	OUT	2.7 V	2.7 V	OUT	"	CLK to Q1	"	"	"
		"	84	"							"	"							"	CLK to Q2	"	"	"
		"	85	"							"	"							"	CLK to Q3	"	"	"
		"	86	"							"	"							"	CLK to Q4	"	"	"
		"	87	"							"	"							"	CLK to Q5	"	"	"
		"	88	"							"	"							"	CLK to Q6	"	"	"

See footnotes at end of device type 05.

TABLE III. Group A inspection for device type 05 - Continued.
Terminal conditions (pins not designated may be high ≥ 2.0 V, low ≤ 0.8 V, or open).

Subgroup	Symbol	MIL-STD-883 method	Cases E,F Test no.	1 CLR	2 Q1	3 D1	4 D2	5 Q2	6 D3	7 Q3	8 GND	9 CLK	10 Q4	11 D4	12 Q5	13 D5	14 D6	15 Q6	16 V_{CC}	Measured terminal	Limits Min	Limits Max	Unit
9 T_C = +25°C	t_{PHL1}	Fig. 16	89	2.7 V	OUT	IN (D)	IN (D)	OUT	IN (D)	OUT	GND	IN (C)	OUT	IN (D)	OUT	IN (D)	IN (D)	OUT	5.0 V	CLK to Q1	2.0	19.0	ns
		"	90	"							"	"							"	CLK to Q2	"	"	"
		"	91	"							"	"							"	CLK to Q3	"	"	"
		"	92	"							"	"							"	CLK to Q4	"	"	"
		"	93	"							"	"							"	CLK to Q5	"	"	"
		"	94	"							"	"							"	CLK to Q6	"	"	"
	t_{PHL2}	Fig. 14	95	IN (F)	OUT	2.7 V	2.7 V	OUT	2.7 V	OUT	"	IN (G)	OUT	2.7 V	OUT	2.7 V	2.7 V	OUT	"	CLR to Q1	"	24.0	"
		"	96	"							"	"							"	CLR to Q2	"	"	"
		"	97	"							"	"							"	CLR to Q3	"	"	"
		"	98	"							"	"							"	CLR to Q4	"	"	"
		"	99	"							"	"							"	CLR to Q5	"	"	"
		"	100	"							"	"							"	CLR to Q6	"	"	"
10 T_C = +125°C	f_{MAX} 6/		101-106	Same tests and terminal conditions as for subgroup 9, except T_C = +125°C and limits are as shown.																	55		MHz
	t_{PLH1}		107-112																		2.0	17.0	ns
	t_{PLH2}		113-118																		"	17.0	"
	t_{PHL1}		119-124																		"	23.0	"
	t_{PHL2}		125-130																		"	29.0	"
11	Same tests, terminal conditions, limits as for subgroup 10, except T_C = -55°C.																						

1/ Only a summary of attributes data is required.

2/ Inputs: A = 3.0 V minimum, B = 0.0 V or GND.

3/ Outputs: H > 1.5 V, L < 1.5 V.

4/ C = Normal clock pulse.

5/ D = Momentary condition: 5.0 V to momentary GND to 5.0 V, occurs before measurement is made.

6/ f_{MAX}, minimum limit specified is the frequency of the input pulse. The output frequency shall be one-half of the input frequency.

7/ For circuit B, $I_{OS(max)}$ is -110 mA.

TABLE III. Group A inspection for device type 06.
Terminal conditions (pins not designated may be high ≥ 2.0 V, low ≤ 0.8 V, or open).

Subgroup	Symbol	MIL-STD-883 method	Cases E,F Test no.	1 CLR	2 Q1	3 $\overline{Q1}$	4 D1	5 D2	6 $\overline{Q2}$	7 Q2	8 GND	9 CLK	10 Q3	11 $\overline{Q3}$	12 D3	13 D4	14 $\overline{Q4}$	15 Q4	16 V_{CC}	Measured terminal	Limits Min	Limits Max	Unit
1 T_C = +25°C	V_{OH}	3006	1	D	-1 mA		2.0 V				GND	C							4.5 V	Q1	2.5		V
		"	2	"		-1 mA	0.8 V				"	"							"	$\overline{Q1}$	"		"
		"	3	"				2.0 V		-1 mA	"	"							"	Q2	"		"
		"	4	"				0.8 V	-1 mA		"	"							"	$\overline{Q2}$	"		"
		"	5	"							"	"	-1 mA		2.0 V				"	Q3	"		"
		"	6	"							"	"		-1 mA	0.8 V				"	$\overline{Q3}$	"		"
		"	7	"							"	"				2.0 V		-1 mA	"	Q4	"		"
		"	8	"							"	"				0.8 V	-1 mA		"	$\overline{Q4}$	"		"
		"	9	0.8 V		-1 mA					"								"	$\overline{Q1}$	"		"
		"	10	"					-1 mA		"								"	$\overline{Q2}$	"		"
		"	11	"							"			-1 mA					"	$\overline{Q3}$	"		"
		"	12	"							"						-1 mA		"	$\overline{Q4}$	"		"
	V_{OL}	3007	13	D		20 mA	2.0 V				"	C							"	$\overline{Q1}$		0.5	"
		"	14	"	20 mA		0.8 V				"	"							"	Q1		"	"
		"	15	"				2.0 V	20 mA		"	"							"	$\overline{Q2}$		"	"
		"	16	"				0.8 V		20 mA	"	"		20 mA	2.0 V				"	Q2		"	"
		"	17	"							"	"			0.8 V				"	$\overline{Q3}$		"	"
		"	18	"							"	"	20 mA						"	Q3		"	"
		"	19	"							"	"				2.0 V	20 mA		"	$\overline{Q4}$		"	"
		"	20	"							"	"				0.8 V		20 mA	"	Q4		"	"
		"	21	0.8 V	20 mA						"								"	Q1		"	"
		"	22	"						20 mA	"								"	Q2		"	"
		"	23	"							"		20 mA						"	Q3		"	"
		"	24	"							"							20 mA	"	Q4		"	"
	V_{IC}		25	-18 mA							"								"	CLR		-1.2	"
			26				-18 mA				"								"	D1		"	"
			27					-18 mA			"								"	D2		"	"
			28								"	-18 mA							"	CLK		"	"
			29								"				-18 mA				"	D3		"	"
			30								"					-18 mA			"	D4		"	"
	I_{IL1}	3009	31	0.5 V							"								5.5 V	CLR	-1.0	-2.0	mA
		"	32				0.5 V				"								"	D1	"	"	"
		"	33					0.5 V			"								"	D2	"	"	"
		"	34								"	0.5 V							"	CLK	"	"	"
		"	35								"				0.5 V				"	D3	"	"	"
		"	36								"					0.5 V			"	D4	"	"	"
	I_{IH1}	3010	37	2.7 V							"								"	CLR		50	μA
		"	38				2.7 V				"								"	D1		"	"
		"	39					2.7 V			"								"	D2		"	"
		"	40								"	2.7 V							"	CLK		"	"
		"	41								"				2.7 V				"	D3		"	"
		"	42								"					2.7 V			"	D4		"	"
	I_{IH5}	"	43	5.5 V							"								"	CLR		1.0	mA
		"	44				5.5 V				"								"	D1		"	"
		"	45					5.5 V			"								"	D2		"	"
		"	46								"	5.5 V							"	CLK		"	"
		"	47								"				5.5 V				"	D3		"	"
		"	48								"					5.5 V			"	D4		"	"

See footnotes at end of device type 06.

TABLE III. Group A inspection for device type 06 - Continued.
Terminal conditions (pins not designated may be high ≥ 2.0 V, low ≤ 0.8 V, or open).

Subgroup	Symbol	MIL-STD-883 method	Cases E,F Test no.	1 CLR	2 Q1	3 $\overline{Q1}$	4 D1	5 D2	6 $\overline{Q2}$	7 Q2	8 GND	9 CLK	10 Q3	11 $\overline{Q3}$	12 D3	13 D4	14 $\overline{Q4}$	15 Q4	16 V_{CC}	Measured terminal	Limits Min	Limits Max	Unit
1 T_C = +25°C	I_{OS}	3011	49	5.5 V	GND		5.5 V				GND	C							4.5 V	Q1	-40	-100	mA
		"	50	"				5.5 V		GND	"	"							"	Q2	"	7/	"
		"	51	"							"	"	GND		5.5 V				"	Q3	"	"	"
		"	52	"							"	"				5.5 V			"	Q4	"	"	"
		"	53	"		GND	GND				"	"						GND	"	$\overline{Q1}$	"	"	"
		"	54	"				GND	GND		"	"							"	$\overline{Q2}$	"	"	"
		"	55	"							"	"		GND	GND				"	$\overline{Q3}$	"	"	"
		"	56	"							"	"				GND	GND		"	$\overline{Q4}$	"	"	"
	I_{CC}	3005	57	"			5.5 V	5.5 V			"	D			5.5 V	5.5 V			"	V_{CC}		96	"
	I_{CEX}		58	D	5.5 V		5.5 V				"	C							"	Q1		250	μA
			59	"		5.5 V	GND				"	"							"	$\overline{Q1}$		"	"
			60	"				5.5 V		5.5 V	"	"							"	Q2		"	"
			61	"				GND	5.5 V		"	"							"	$\overline{Q2}$		"	"
			62	"							"	"	5.5 V		5.5 V				"	Q3		"	"
			63	"							"	"		5.5 V	GND				"	$\overline{Q3}$		"	"
			64	"							"	"				5.5 V		5.5 V	"	Q4		"	"
			65	"							"	"				GND	5.5 V		"	$\overline{Q4}$		"	"
2	Same tests, terminal conditions and limits as for subgroup 1, except T_C = +125°C, V_{IC} tests are omitted. $V_{OL(max)}$ = 0.45 V, V_{IL} = 0.7 V.																						
3	Same tests, terminal conditions and limits as for subgroup 1, except T_C = -55°C and V_{IC} tests are omitted.																						
7 1/ 2/ T_C = +25°C			66	B	L	H	A	A	H	L	GND	B	L	H	A	A	H	L	4.5 V	All outputs	H or L 3/ as shown		Vdc
			67	"	"	"	"	"	"	"	"	A	"	"	"	"	"	"	"	"	"	"	
			68	"	"	"	"	"	"	"	"	B	"	"	"	"	"	"	"	"	"	"	
			69	A	"	"	"	"	"	"	"	B	"	"	"	"	"	"	"	"	"	"	
			70	"	H	L	"	"	L	H	"	A	H	L	"	"	L	H	"	"	"	"	
			71	"	"	"	"	"	"	"	"	B	"	"	"	"	"	"	"	"	"	"	
			72	"	"	"	B	B	"	"	"	B	"	"	B	B	"	"	"	"	"	"	
			73	"	L	H	"	"	H	L	"	A	L	H	"	"	H	L	"	"	"	"	
			74	"	"	"	"	"	"	"	"	B	"	"	"	"	"	"	"	"	"	"	
			75	"	"	"	A	A	"	"	"	B	"	"	A	A	"	"	"	"	"	"	
			76	"	H	L	"	"	L	H	"	A	H	L	"	"	L	H	"	"	"	"	
			77	"	H	L	"	"	L	H	"	B	H	L	"	"	L	H	"	"	"	"	
			78	B	L	H	"	"	H	L	"	B	L	H	"	"	H	L	"	"	"	"	
8 1/ 2/	Same tests, terminal conditions and limits as for subgroup 7, except T_C = +125°C and -55°C.																						
9 T_C = +25°C	f_{MAX} 6/	Fig. 15	79	2.7 V	OUT		IN (B)				GND	IN (A)							5.0 V	Q1	75		MHz
		"	80	"		OUT	IN (B)				"	"							"	$\overline{Q1}$	"		"
		"	81	"				IN (B)			"	"							"	Q2	"		"
		"	82	"				IN (B)	OUT		"	"							"	$\overline{Q2}$	"		"
		"	83	"						OUT	"	"	OUT						"	Q3	"		"
		"	84	"							"	"		OUT	IN (B)				"	$\overline{Q3}$	"		"
		"	85	"							"	"			IN (B)	IN (B)			"	Q4	"		"
		"	86	"							"	"					OUT	OUT	"	$\overline{Q4}$	"		"

See footnotes at end of device type 06.

TABLE III. Group A inspection for device type 06 - Continued.
Terminal conditions (pins not designated may be high ≥ 2.0 V, low ≤ 0.8 V, or open).

Subgroup	Symbol	MIL-STD-883 method	Cases E,F Test no.	1 CLR	2 Q1	3 $\overline{Q1}$	4 D1	5 D2	6 $\overline{Q2}$	7 Q2	8 GND	9 CLK	10 Q3	11 $\overline{Q3}$	12 D3	13 D4	14 $\overline{Q4}$	15 Q4	16 V_{CC}	Measured terminal	Limits Min	Limits Max	Unit
9 T_C = +25°C	t_{PLH1}	Fig. 16	87	2.7 V	OUT		IN (E)				GND	IN (C)							5.0 V	CLK to Q1	2.0	14.0	ns
		"	88	"		OUT	IN (D)				"	"							"	CLK to $\overline{Q1}$	"	"	"
		"	89	"				IN (E)		OUT	"	"							"	CLK to Q2	"	"	"
		"	90	"				IN (D)	OUT		"	"							"	CLK to $\overline{Q2}$	"	"	"
		"	91	"							"	"	OUT		IN (E)				"	CLK to Q3	"	"	"
		"	92	"							"	"		OUT	IN (D)				"	CLK to $\overline{Q3}$	"	"	"
		"	93	"							"	"				IN (E)		OUT	"	CLK to Q4	"	"	"
		"	94	"							"	"				IN (D)	OUT		"	CLK to $\overline{Q4}$	"	"	"
	t_{PLH2}	Fig. 14	95	IN (F)	OUT		2.7 V				"	IN (G)							"	CLK to Q1	"	"	"
		"	96	"				2.7 V		OUT	"	"							"	CLK to Q2	"	"	"
		"	97	"							"	"	OUT		2.7 V				"	CLK to Q3	"	"	"
		"	98	"							"	"				2.7 V		OUT	"	CLK to Q4	"	"	"
	t_{PLH3}	"	99	"		OUT	2.7 V				"	"							"	CLR to $\overline{Q1}$	"	16.0	"
		"	100	"				2.7 V	OUT		"	"							"	CLR to $\overline{Q2}$	"	"	"
		"	101	"							"	"		OUT	2.7 V				"	CLR to $\overline{Q3}$	"	"	"
		"	102	"							"	"				2.7 V	OUT		"	CLR to $\overline{Q4}$	"	"	"
	t_{PHL1}	Fig. 16	103	2.7 V	OUT		IN (D)				"	IN (C)							"	CLK to Q1	"	19.0	"
		"	104	"		OUT	IN (E)				"	"							"	CLK to $\overline{Q1}$	"	"	"
		"	105	"				IN (D)		OUT	"	"							"	CLK to Q2	"	"	"
		"	106	"				IN (E)	OUT		"	"							"	CLK to $\overline{Q2}$	"	"	"
		"	107	"							"	"	OUT		IN (D)				"	CLK to Q3	"	"	"
		"	108	"							"	"		OUT	IN (E)				"	CLK to $\overline{Q3}$	"	"	"
		"	109	"							"	"				IN (D)		OUT	"	CLK to Q4	"	"	"
		"	110	"							"	"				IN (E)	OUT		"	CLK to $\overline{Q4}$	"	"	"
	t_{PHL3}	Fig. 14	111	IN (F)		OUT	2.7 V				"	IN (G)							"	CLK to $\overline{Q1}$	"	"	"
		"	112	"				2.7 V	OUT		"	"							"	CLK to $\overline{Q2}$	"	"	"
		"	113	"							"	"		OUT	2.7 V				"	CLK to $\overline{Q3}$	"	"	"
		"	114	"							"	"				2.7 V	OUT		"	CLK to $\overline{Q4}$	"	"	"
	t_{PHL2}	"	115	"	OUT		2.7 V				"	IN (G)							"	CLR to Q1	"	24.0	"
		"	116	"				2.7 V		OUT	"	"							"	CLR to Q2	"	"	"
		"	117	"							"	"	OUT		2.7 V				"	CLR to Q3	"	"	"
		"	118	"							"	"				2.7 V		OUT	"	CLR to Q4	"	"	"
10 T_C = +125°C	f_{MAX} 6/	Fig. 15	119-126	Same tests and terminal conditions as for subgroup 9, except T_C = +125°C and limits are as shown.																	55		MHz
	t_{PLH1}	Fig. 16	127-134																		2.0	17.0	ns
	t_{PLH2}	Fig. 14	135-138																		"	17.0	"
	t_{PLH3}	Fig. 14	139-142																		"	20.0	"

See footnotes at end of device type 06.

TABLE III. Group A inspection for device type 06 - Continued.
Terminal conditions (pins not designated may be high ≥ 2.0 V, low ≤ 0.8 V, or open).

Subgroup	Symbol	MIL-STD-883 method	Cases E,F Test no.	1 CLR	2 Q1	3 $\overline{Q1}$	4 D1	5 D2	6 $\overline{Q2}$	7 Q2	8 GND	9 CLK	10 Q3	11 $\overline{Q3}$	12 D3	13 D4	14 $\overline{Q4}$	15 Q4	16 V_{CC}	Measured terminal	Limits Min	Limits Max	Unit
10 T_C = +125°C	t_{PHL1}	Fig. 16	143-150	Same tests and terminal conditions as for subgroup 9, except T_C = +125°C and limits are as shown.																	2.0	23.0	ns
	t_{PHL3}	Fig. 14	151-154																		"	23.0	"
	t_{PHL2}	Fig. 14	155-158																		"	29.0	"
11	Same tests, terminal conditions, limits as for subgroup 10, except T_C = -55°C.																						

1/ Only a summary of attributes data is required.

2/ Inputs: A = 3.0 V minimum, B = 0.0 V or GND.

3/ Outputs: H > 1.5 V, L < 1.5 V.

4/ C = Normal clock pulse.

5/ D = Momentary condition: 5.0 V to momentary GND to 5.0 V occurs before measurement is made.

6/ f_{MAX}, minimum limit specified is the frequency of the input pulse. The output frequency shal be one-half of the input frequency.

7/ For circuit B, $I_{OS(max)}$ is -110 mA.

4.3 Qualification inspection. Qualification inspection shall be in accordance with MIL-M-38510. Inspections to be performed shall be those specified in method 5005 of MIL-STD-883 and herein for groups A, B, C, and D inspections (see 4.4.1 through 4.4.4).

4.4 Quality conformance inspection. Quality conformance inspection shall be in accordance with MIL-M-38510 and as specified herein. Inspections to be performed shall be those specified in method 5005 of MIL-STD-883 and herein for groups A, B, C, and D inspections (see 4.4.1 through 4.4.4).

4.4.1 Group A inspection. Group A inspection shall be in accordance with table I of method 5005 of MIL-STD-883 and as follows:

a. Test requirements shall be as specified in table II, herein.

b. Subgroups 4, 5, and 6 of table I of method 5005 of MIL-STD-883 shall be omitted.

4.4.2 Group B inspection. Group B inspection shall be in accordance with table II of method 5005 of MIL-STD-883. Electrical parameters shall be as specified in table II, herein.

4.4.3 Group C inspections. Group C inspections shall be in accordance with table III of method 5005 of MIL-STD-883 and as follows:

a. End-point electrical parameters shall be as specified in table II herein.

b. Subgroups 3 and 4 shall be added to the group C inspection requirements for class B devices and shall consist of the tests, conditions, and limits specified for subgroups 10 and 11 of group A.

c. Steady-state life test (method 1005 of MIL-STD-883) conditions or equivalent:

(1) Test condition D, using the circuit shown on figure 4 or equivalent.

(2) T_A = +125°C, minimum.

(3) Test duration: 1,000 hours, except as permitted by appendix E of MIL-M-38510 and method 1005 of MIL-STD-883.

4.4.4 Group D inspection. Group D inspection shall be in accordance with table IV of method 5005 of MIL-STD-883. End-point electrical parameters shall be as specified in table II herein.

4.5 Methods of inspection. Methods of inspection shall be specified as follows.

4.5.1 Voltage and current. All voltages given are referenced to the microcircuit ground terminal. Currents given are conventional and positive when flowing into the referenced terminal.

5. PACKAGING

5.1 Packaging requirements. The requirements for packaging shall be in accordance with MIL-M-38510.

6. NOTES

6.1 Intended use. Microcircuits conforming to this specification are intended for original equipment design application and logistic support of existing equipment.

6.2 Ordering data. The acquisition document should specify the following:

a. Complete part number (see 1.2).

b. Requirements for delivery of one copy of the quality conformance inspection data pertinent to the device inspection lot to be supplied with each shipment by the device manufacturer, if applicable.

c. Requirements for certificate of compliance, if applicable.

d. Requirements for notification of change of product or process to the contracting activity in addition to notification to the qualifying activity, if applicable.

e. Requirements for failure analysis (including required test condition of method 5003 of MIL-STD-883), corrective action and reporting of results, if applicable.

f. Requirements for product assurance options.

g. Requirements for special carriers, lead lengths, or lead forming, if applicable. These requirements shall not affect the part number. Unless otherwise specified, these requirements shall not apply to direct purchase by or direct shipment to the Government.

h. Requirements for "JAN" marking.

6.3 Abbreviations, symbols, and definitions. The abbreviations, symbols, and definitions used herein are defined in MIL-M-38510, MIL-STD-1331, and as follows:

GND - - - - - - - - - - - - - - Ground zero voltage potential.
V_{IN} - - - - - - - - - - - - - Voltage level at an input terminal.
f_{MAX} - - - - - - - - - - - - - Maximum clock frequency.

6.4 Logistic support. Lead materials and finishes (see 3.3) are interchangeable. Unless otherwise specified, microcircuits acquired for Government logistic support will be acquired to device class B (see 1.2.2), lead material and finish C (see 3.3). Longer length leads and lead forming shall not affect the part number.

6.5 Substitutability. The cross-reference information below is presented for the convenience of users. Microcircuits covered by this specification will functionally replace the listed generic-industry type. Generic-industry microcircuit types may not have equivalent operational performance characteristics across military temperature ranges or reliability factors equivalent to MIL-M-38510 device types and may have slight physical variations in relation to case size. The presence of this information shall not be deemed as permitting substitution of generic-industry types for MIL-M-38510 types or as a waiver of any of the provisions of MIL-M-38510.

Military device type	Generic-industry type
01	54S74
02	54S112
03	54S113
04	54S114
05	54S174
06	54S175

6.6 Manufacturers' designators. Manufacturers' circuits which form a part of this specification are designated as shown in table IV herein.

TABLE IV. Manufacturers' designations.

Device type	Circuits			
	Texas Instruments	Signetics	Advanced Microdevices	Fairchild Semiconductor
01	A	B		C
02	A	B		C
03	A	B		C
04	A	B		C
05	A	D	B	C
06	A		B	C

6.7 Changes from previous issue. Asterisks are not used in this revision to identify changes with respect to the previous issue, due to the extensiveness of the changes.

Custodians:
Army - ER
Navy - EC
Air Force - 17

Review activities:
Army - AR, MI
Navy - OS, SH, TD
Air Force - 11, 19, 85, 99
DLA - ES

User activities:
Navy - AS, CG, MC
Air Force - SM

Agent:
DLA - ES

Preparing activity:
Air Force - 17

(Project 5962-0682-1)