Qualification requirements have been removed for device type 03 only (see Scope).

MILITARY SPECIFICATION

MICROCIRCUITS, DIGITAL, BIPOLAR, SCHOTTKY TTL, AND-OR-INVERT GATES MONOLITHIC SILICON

This specification is approved for use by all Departments and Agencies of the Department of Defense.

1. SCOPE

1.1 Scope. This specification covers the detail requirements for monolithic silicon, Schottky TTL, AND-OR-INVERT logic gating microcircuits. Qualification requirements are removed for device type 03. This device type is inactive for new design after the date of this revision. For the remaining device types 01, 02, two product assurance classes and a choice of case outlines and lead finishes are provided and are reflected in the complete part number.

1.2 Part number. The part number shall be in accordance with MIL-M-38510, with the exception that the "JAN" or "J" certification mark shall not be used for device type 03.

1.2.1 Device type. The device type shall be as follows:

Device type	Circuit
01	Dual 2-wide, 2-input AND-OR-INVERT gate
02	4-2-3-2-input AND-OR-INVERT gate
03 1/	4-2-3-2 input AND-OR-INVERT gate with open collector

1.2.2 Device class. The device class shall be the product assurance level as defined in MIL-M-38510.

1.2.3 Case outline. The case outline shall be designated as follows:

Outline letter	Case outline (see MIL-M-38510, appendix C)
A	F-1 (14-lead, 1/4" x 1/4"), flat-package
B	F-3 (14-lead, 3/16" x 1/4"), flat-package
C	D-1 (14-lead, 1/4" x 3/4"), dual-in-line package
D	F-2 (14-lead, 1/4" x 3/8"), flat-package

1.3 Absolute maximum ratings.

Supply voltage range- - - - - - - - - - - -	-0.5 V dc to +7.0 V dc
Input voltage range - - - - - - - - - - - -	-1.2 V dc at -18 mA to +5.5 V dc
Storage temperature range - - - - - - - - -	-65°C to +150°C
Maximum power dissipation (P_D) 2/ per device	
Device type 01 - - - - - - - - - - - - - -	121 mW
Device type 02 and 03 - - - - - - - - - - -	88 mW
Lead temperature (soldering, 10 seconds)- -	300°C
Thermal resistance, junction-to-case (θ_{JC}):	
Cases A, B, C, and D- - - - - - - - - - - -	(See MIL-M-38510, appendix C)
Junction temperature (T_J) 3/- - - - - - - -	175°C

1/ Qualification requirements removed for this device type.
2/ Must withstand the added P_D due to short circuit test condition (e.g., I_{OS}).
3/ Maximum junction temperature shall not be exceeded except for short duration burn-in screening conditions per method 5004 of MIL-STD-883.

Beneficial comments (recommendations, additions, deletions) and any pertinent data which may be of use in improving this document should be addressed to: Rome Air Development Center (RBE-2), Griffiss AFB, NY 13441, by using the self-addressed Standardization Document Improvement Proposal (DD Form 1426) appearing at the end of this document or by letter.

FSC 5962

DISTRIBUTION STATEMENT A. Approved for public release; distribution is unlimited.

1.4 Recommended operating conditions.

Supply voltage (V_{CC})- - - - - - - - - - -	4.5 V dc minimum to 5.5 V dc maximum
Minimum high-level input voltage (V_{IH})-	2.0 V dc
Maximum low-level input voltage (V_{IL}) -	0.8 V dc 4/
Case operating temperature range (T_C) -	-55°C to +125°C

2 APPLICABLE DOCUMENTS

2.1 Government documents.

2.1.1 Specification and standard. Unless otherwise specified, the following specification and standard, of the issue listed in that issue of the Department of Defense Index of Specifications and Standards specified in the solicitation, form a part of this specification to the extent specified herein.

SPECIFICATION

MILITARY

MIL-M-38510 - Microcircuits, General Specification for.

STANDARD

MILITARY

MIL-STD-883 - Test Methods and Procedures for Microelectronics.

(Copies of the specification and standard required by manufacturers in connection with specific acquisition functions should be obtained from the contracting activity or as directed by the contracting officer.)

2.2 Order of precedence. In the event of a conflict between the text of this specification and the references cited herein (except for associated detail specifications, specification sheets or MS standards), the text of this specification shall take precedence. Nothing in this specification, however, shall supersede applicable laws and regulations unless a specific exemption has been obtained.

3. REQUIREMENTS

3.1 Detail specification. The individual item requirements shall be in accordance with MIL-M-38510, and as specified herein.

3.2 Design, construction, and physical dimensions. The design, construction, and physical dimensions shall be as specified in MIL-M-38510 and herein.

3.2.1 Logic diagram and terminal connections. The logic diagram and terminal connections shall be as specified on figure 1.

3.2.2 Truth tables and logic equations. The truth tables and logic equations shall be as specified on figure 2.

3.2.3 Schematic circuits. Schematic circuits shall be submitted to the preparing activity prior to inclusion of a manufacturer's device in the specification and shall be submitted to the qualifying activity and agent activity (DESC-ECS) as a prerequisite for qualification. All qualified manufacturers schematics shall be maintained by the agent activity and will be available upon request.

3.2.4 Case outlines. The case outlines shall be as specified in 1.2.3.

3.3 Lead material and finish. The lead material and finish shall be in accordance with MIL-M-38510 (see 5.4).

3.4 Electrical performance characteristics. The electrical performance characteristics are as specified in table I, and apply over the full recommended case operating temperature range, unless otherwise specified.

4/ V_{IL} = 0.7 V at +125°C.

TABLE I. Electrical performance characteristics.

Test	Symbol	Conditions $-55^{\circ}C \leq T_C \leq +125^{\circ}C$	Device type	Limits Min	Limits Max	Unit
High-level output voltage	V_{OH}	V_{CC} = 4.5 V, V_{IN} = 0.8 V I_{OH} = -1 mA 1/	01, 02	2.5	---	V
		T_C = +125°C, V_{IN} = 0.7 V				
Low-level output voltage	V_{OL}	V_{CC} = 4.5 V, I_{OL} = 20 mA V_{IN} = 2.0 V for all inputs of gate under test 2/	01, 02, 03 4/	---	0.5	V
		T_C = +125°C			0.45	V
Input clamp voltage	V_{IC}	V_{CC} = 4.5 V, I_{IN} = -18 mA T_C = 25°C	01, 02, 03 4/	---	-1.2	V
High-level input current	I_{IH1}	V_{CC} = 5.5 V, V_{IN} = 2.7 V 2/	01, 02, 03 4/	---	50	µA
High-level input current	I_{IH2}	V_{CC} = 5.5 V, V_{IN} = 5.5 V 2/	01, 02, 03 4/	---	1.0	mA
Low-level input current	I_{IL}	V_{CC} = 5.5 V, V_{IN} = 0.5 V 1/	01, 02, 03 4/	-1.0	-2.0	mA
Short-circuit output current	I_{OS}	V_{CC} = 5.5 V 3/	01, 02	-40	-100	mA
High-level supply current	I_{CCH}	V_{CC} = 5.5 V V_{IN} = 0 V	01	---	18.0	mA
			02	---	12.5	
			03 4/	---	11.0	
Low-level supply current	I_{CCL}	V_{CC} = 5.5 V V_{IN} = 5.5 V	01	---	22.0	mA
			02	---	16.0	
			03 4/	---	16.0	
Collector cut-off current	I_{CEX}	V_{CC} = 5.5 V, V_{IL} = GND V_{IH} = 5.5 V	01, 02	---	250	µA
		V_{CC} = 4.5 V, V_{IL} = GND V_{IH} = 5.5 V	03 4/	---	250	µA
Propagation delay time, high-to-low-level	t_{PHL}	C_L = 50 pF ±10%, R_L = 280Ω	01, 02	2.0	10.0	ns
			03 4/	2.0	13.0	
Propagation delay time, low-to-high-level	t_{PLH}	C_L = 50 pF ±10%, R_L = 280Ω	01, 02	2.0	9.0	ns
			03 4/	2.0	16.0	

1/ All unspecified inputs at 5.5 volts.
2/ All unspecified inputs grounded.
3/ Not more than one output should be shorted at a time, duration of test not to exceed five seconds.
4/ Qualification requirements removed for device type 03.

3.5 Electrical test requirements. The electrical test requirements for each device class shall be the subgroups specified in table II. The electrical tests for each subgroup are described in table III.

3.6 Marking. Marking shall be in accordance with MIL-M-38510 and 1.2 herein. The "JAN" or "J" certification mark shall not be used for device type 03.

3.7 Microcircuit group assignment. The devices 01 and 02 covered by this specification shall be in microcircuit group number 8 (see MIL-M-38510, appendix E).

3.8 Manufacturer eligibility. To be eligible to supply microcircuits to this specification, a manufacturer shall have a manufacturer certification in accordance with MIL-M-38510 for at least one line. Not necessarily the line producing the device type described herein. This shall apply only for device type 03.

3.9 Certification. Certification in accordance with MIL-M-38510 is not required for device type 03.

TABLE II. Electrical test requirements.

MIL-STD-883 test requirements	Subgroups (see table III)	
	Class S devices 1/	Class B devices
Initial electrical parameters (pre burn-in) (method 5004)	1	1
Final electrical test parameters (method 5004)	1*,2,3,9, 10,11	1*,2,3, 9
Group A test requirements (method 5005)	1,2,3,9, 10,11	1,2,3,9
Group B test requirements (method 5005) subgroup 5 2/	1,2,3,9, 10,11	N/A
Group C end-point electrical parameters (method 5005)	N/A	1,2,3
Additional electrical subgroups for group C periodic inspections	N/A	10,11
Group D end-point electrical parameters (method 5005)	1,2,3	1,2,3

*PDA applies to subgroup 1 (see 4.2c).

1/ Class S product assurance class is not applicable for device type 03.

2/ Group B testing requirements shall apply to device types 01 and 02 only.

4. QUALITY ASSURANCE PROVISIONS

4.1 Sampling and inspection. Sampling and inspection procedures shall be in accordance with MIL-M-38510 and methods 5005 and 5007, as applicable, of MIL-STD-883, except as modified herein.

4.2 Screening. Screening shall be in accordance with method 5004 of MIL-STD-883, and shall be conducted on device types 01 and 02, prior to qualification and quality conformance inspection, and on device type 03, prior to quality conformance inspection. The following additional criteria shall apply:

a. Burn-in (method 1015 of MIL-STD-883).

(1) Test condition D or E, using the circuit shown on figure 3, or equivalent.

(2) T_A = +125°C minimum.

b. Initial and final electrical test parameters shall be as specified in table II, except initial electrical parameters test prior to burn-in is optional at the discretion of the manufacturer.

c. The percent defective allowable (PDA) shall be as specified in MIL-M-38510.

4.3 Qualification inspection. Qualification inspection shall be in accordance with MIL-M-38510. Inspections to be performed shall be those specified in method 5005 of MIL-STD-883 and herein for groups A, B, C, and D inspections (see 4.4.1 through 4.4.4). Qualification inspection is not required for device type 03.

4.4 Quality conformance inspection. Quality conformance inspection shall be in accordance with MIL-M-38510 and as specified herein. Inspections to be performed shall be those specified in method 5005 of MIL-STD-883 and herein for groups A, B, C, and D inspections (see 4.4.1 through 4.4.4). Generic test data (see 6.5) may be used to satisfy the requirements for groups C and D inspections. Quality conformance inspection shall be completed on the specific devices covered by this specification before they are shipped.

4.4.1 Group A inspection. Group A inspection shall be in accordance with table I of method 5005 of MIL-STD-883 and as follows:

a. Electrical test requirements shall be as specified in table II herein.

b. Subgroups 4, 5, 6, 7, and 8 of table I of method 5005 of MIL-STD-883 shall be omitted.

4.4.2 Group B inspection. Group B inspection shall be in accordance with table II of method 5005 of MIL-STD-883. Electrical test requirements for device types 01 and 02, shall be as specified in table II herein.

4.4.3 Group C inspection. Group C inspection shall be in accordance with table III of method 5005 of MIL-STD-883 and as follows:

a. End-point electrical parameters shall be as specified in table II herein.

b. Steady-state life test (method 1005 of MIL-STD-883) conditions:

(1) Test condition D or E, using the circuit shown on figure 3, or equivalent.

(2) T_A = +125°C minimum.

(3) Test duration: 1,000 hours, except as permitted by method 1005 of MIL-STD-883.

c. Subgroups 3 and 4 shall be added to group C inspection for class B devices and shall consist of the tests, conditions, and limits specified for subgroups 10 and 11 of group A.

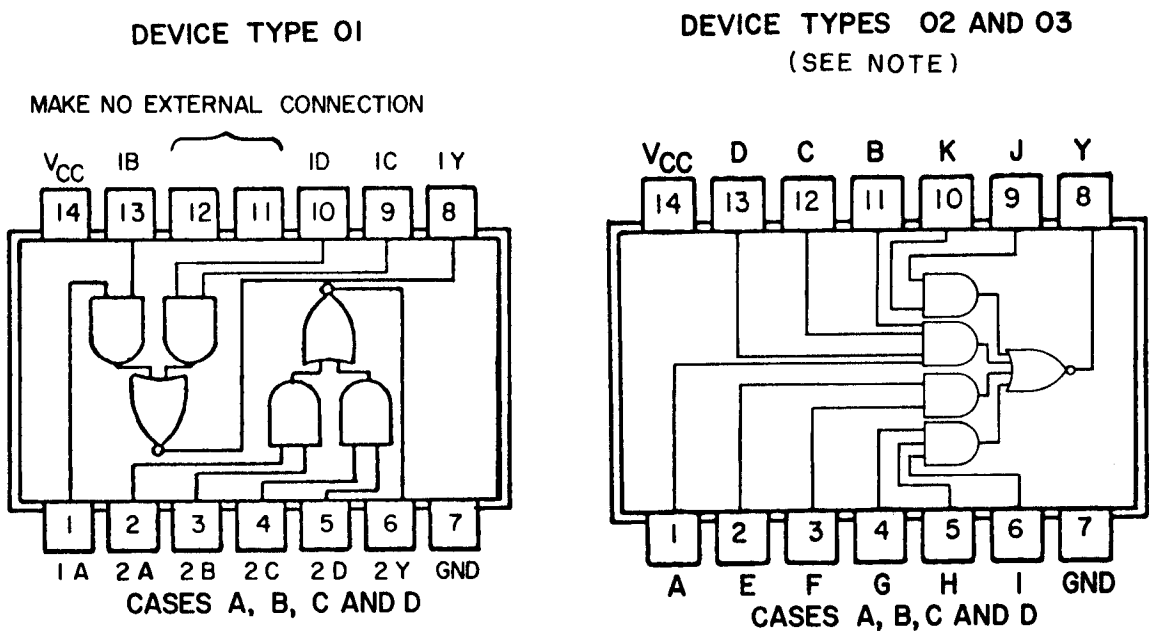

FIGURE 1. Logic diagram and terminal connections (top views).

DEVICE TYPE 01

Truth table (each gate)				
Input				Output
A	B	C	D	Y
H	H	*	*	L
*	*	H	H	L

* Either H or L - All other combinations of H and L at the input give H output.

Positive logic: $Y = \overline{(AB) + (CD)}$

DEVICE TYPES 02 AND 03
(SEE NOTE)

Input											Output
A	B	C	D	E	F	G	H	I	J	K	Y
H	H	H	H	*	*	*	*	*	*	*	L
*	*	*	*	H	H	*	*	*	*	*	L
*	*	*	*	*	*	H	H	H	*	*	L
*	*	*	*	*	*	*	*	*	H	H	L

* Either H or L - All other combinations of H and L at the input give H output.

Positive logic: $Y = \overline{ABCD + EF + GHI + JK}$

NOTE: Qualification requirements removed for device type 03.

FIGURE 2. Truth tables and logic equations.

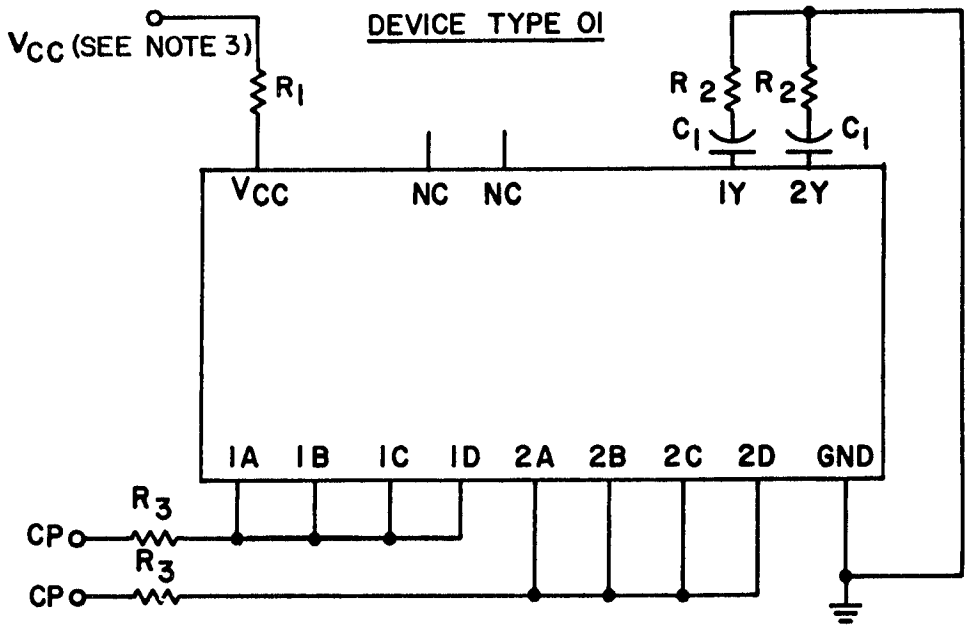

NOTES:
1. R_2 = 75Ω ±5%.
   R_3 = 26.1Ω ±5%.
   C_1 = .047 μF.
2. CP = 100 kHz ±50% square wave; duty cycle = 50 ±15%; V_{IL} = -0.5 V minimum to 0.8 V maximum; V_{IH} = 2.0 V minimum to 5.5 V maximum.
3. V_{CC} and R_1 shall be chosen to insure a 5.0 V minimum at the device V_{CC} terminal.

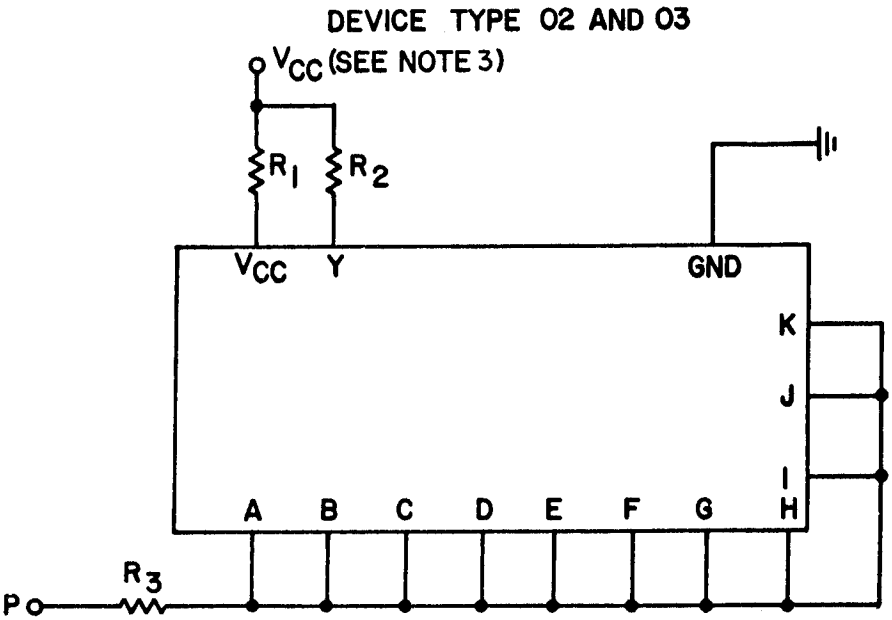

NOTES:
1. R_2 = 220Ω ±5%.
   R_3 = 27Ω ±5%.
2. CP = 100 kHz ±50% square wave; duty cycle = 50 ±15%; V_{IL} = -0.5 V minimum to 0.8 V maximum.
3. V_{CC} and R_1 shall be chosen to insure a 5.0 V minimum at the device V_{CC} terminal.
4. Qualification requirements removed for device type 03.

FIGURE 3. Burn-in and life test circuit.

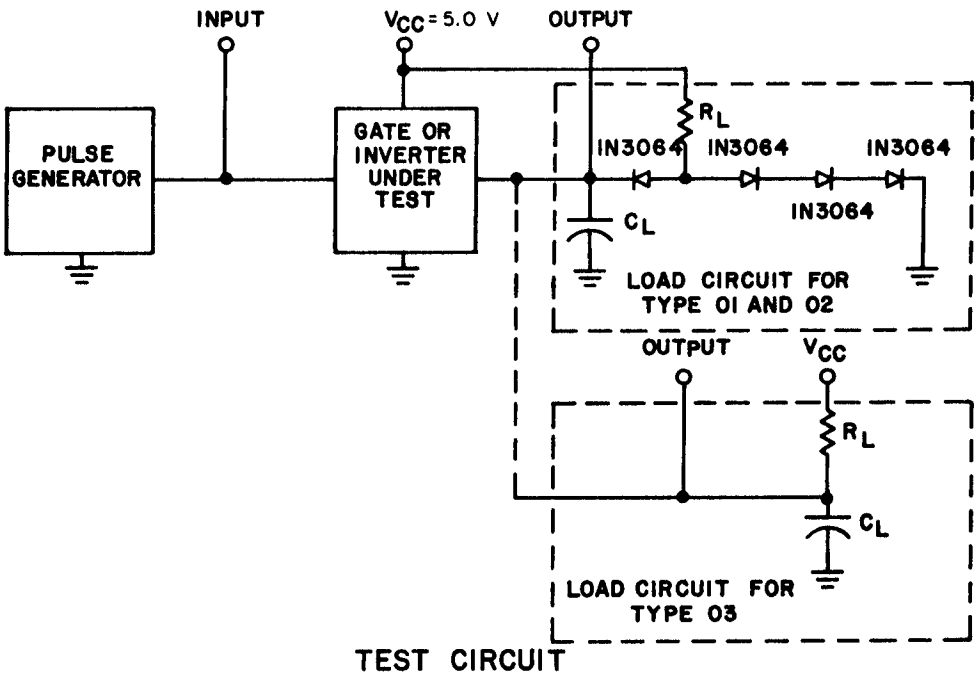

TEST CIRCUIT

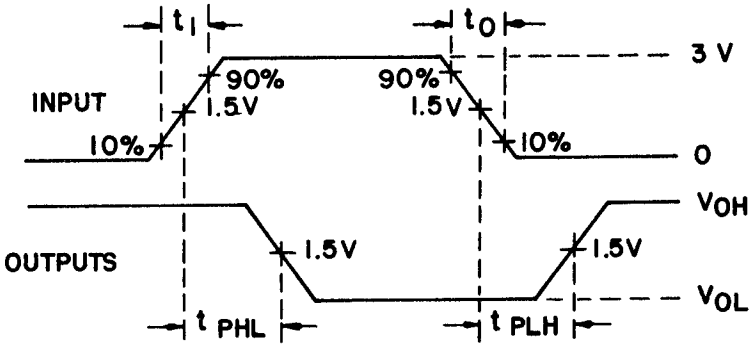

VOLTAGE WAVEFORMS

NOTES:
1. The pulse generator has the following characteristics: $t_1 = t_0 < 2.5$ ns, PRR $\leq$ 1 MHz; and $Z_{OUT} \cong 50\Omega$.
2. C_L = 50 pF ±10% minimum, including scope probe, wiring, and stray capacitance without package in test fixture.
3. Voltage measurements are to be made with respect to network ground terminal.
4. Qualification requirements removed for device type 03.

FIGURE 4. Switching time test circuit.

TABLE III. Group A inspection device type 01.
Terminal conditions (pins not designated may be high ≥ 2.0 V, low ≤ 0.8 V, or open)

Subgroup	Symbol	MIL-STD-883 method	Cases A, B,C,D Test no.	1 1A	2 2A	3 2B	4 2C	5 2D	6 2Y	7 GND	8 1Y	9 1C	10 1D	11 NC	12 NC	13 1B	14 V_{CC}	Measured terminal	Limits Min	Limits Max	Unit
1 T_C = 25°C	V_{OH}	3006	1	0.8 V	5.5 V	5.5 V	5.5 V	5.5 V		GND	-1 mA	GND	GND	GND	GND	5.5 V	4.5 V	1Y	2.5		V
		"	2	5.5 V	"	"	"	"		"	-1 mA	GND	GND	"	"	0.8 V	"	1Y	"		"
		"	3	GND	"	"	"	"		"	-1 mA	0.8 V	5.5 V	"	"	GND	"	1Y	"		"
		"	4	GND	"	"	"	"		"	-1 mA	5.5 V	0.8 V	"	"	GND	"	1Y	"		"
		"	5	5.5 V	0.8 V	"	GND	GND	-1 mA	"		5.5 V	5.5 V	"	"	5.5 V	"	2Y	"		"
		"	6	"	5.5 V	0.8 V	GND	GND	-1 mA	"		"	"	"	"	"	"	2Y	"		"
		"	7	"	GND	GND	0.8 V	5.5 V	-1 mA	"		"	"	"	"	"	"	2Y	"		"
		"	8	"	GND	GND	5.5 V	0.8 V	-1 mA	"		"	"	"	"	"	"	2Y	"		"
	V_{OL}	3007	9	2.0 V	GND	GND	GND	GND		"	20 mA	GND	GND	"	"	2.0 V	"	1Y		0.5	"
		"	10	GND	GND	GND	GND	GND		"	20 mA	2.0 V	2.0 V	"	"	GND	"	1Y		"	"
		"	11	GND	2.0 V	2.0 V	GND	GND	20 mA	"		GND	GND	"	"	GND	"	2Y		"	"
		"	12	GND	GND	GND	2.0 V	2.0 V	20 mA	"		GND	GND	"	"	GND	"	2Y		"	"
	I_{IL}	3009	13	0.5 V	5.5 V	5.5 V	5.5 V	5.5 V		"		5.5 V	5.5 V	"	"	5.5 V	5.5 V	1A	-1	-2	mA
		"	14	5.5 V	5.5 V	5.5 V	"	"		"		"	"	"	"	0.5 V	"	1B	"	"	"
		"	15	"	0.5 V	5.5 V	"	"		"		"	"	"	"	5.5 V	"	2A	"	"	"
		"	16	"	5.5 V	0.5 V	"	"		"		"	"	"	"	"	"	2B	"	"	"
		"	17	"	"	5.5 V	0.5 V	"		"		"	"	"	"	"	"	2C	"	"	"
		"	18	"	"	"	5.5 V	0.5 V		"		"	"	"	"	"	"	2D	"	"	"
		"	19	"	"	"	5.5 V	5.5 V		"		0.5 V	"	"	"	"	"	1C	"	"	"
		"	20	"	"	"	5.5 V	5.5 V		"		5.5 V	0.5 V	"	"	"	"	1D	"	"	"
	I_{IH1}	3010	21	2.7 V	GND	GND	GND	GND		"		GND	GND	"	"	GND	"	1A		50	μA
		"	22	GND	GND	GND	"	"		"		"	"	"	"	2.7 V	"	1B		"	"
		"	23	"	2.7 V	GND	"	"		"		"	"	"	"	GND	"	2A		"	"
		"	24	"	GND	2.7 V	"	"		"		"	"	"	"	"	"	2B		"	"
		"	25	"	"	GND	2.7 V	"		"		"	"	"	"	"	"	2C		"	"
		"	26	"	"	"	GND	2.7 V		"		"	"	"	"	"	"	2D		"	"
		"	27	"	"	"	"	GND		"		2.7 V	GND	"	"	"	"	1C		"	"
		"	28	"	"	"	"	"		"		GND	2.7 V	"	"	"	"	1D		"	"
	I_{IH2}	"	29	5.5 V	"	"	"	"		"		"	GND	"	"	"	"	1A		+1	mA
		"	30	GND	"	"	"	"		"		"	"	"	"	5.5 V	"	1B		"	"
		"	31	"	5.5 V	"	"	"		"		"	"	"	"	GND	"	2A		"	"
		"	32	"	GND	5.5 V	"	"		"		"	"	"	"	"	"	2B		"	"
		"	33	"	"	GND	5.5 V	"		"		"	"	"	"	"	"	2C		"	"
		"	34	"	"	"	GND	5.5 V		"		"	"	"	"	"	"	2D		"	"
		"	35	"	"	"	"	GND		"		5.5 V	"	"	"	"	"	1C		"	"
		"	36	"	"	"	"	"		"		GND	5.5 V	"	"	"	"	1D		"	"
	I_{OS}	3011	37	GND						"	GND	GND	GND	"	"	"	"	1Y	-40	-100	"
		"	38		GND	GND	GND	GND	GND	"				"	"		"	2Y	-40	-100	"
	I_{CCL}	3005	39	5.5 V	5.5 V	5.5 V	GND	GND		"		GND	GND	"	"	5.5 V	"	V_{CC}		22	"
	I_{CCH}	3005	40	GND	GND	GND	GND	GND		"		GND	GND	"	"	GND	"	V_{CC}		18	"
	V_{IC}		41	-18 mA						"				"	"		4.5 V	1A		-1.2	V
			42		-18 mA					"				"	"		"	2A		"	"
			43			-18 mA				"				"	"		"	2B		"	"
			44				-18 mA			"				"	"		"	2C		"	"
			45					-18 mA		"				"	"		"	2D		"	"
			46							"		-18 mA		"	"		"	1C		"	"
			47							"			-18 mA	"	"		"	1D		"	"
			48							"				"	"	-18 mA	"	1B		"	"
	I_{CEX}		49	GND	5.5 V	5.5 V	5.5 V	5.5 V		"	5.5 V	GND	GND	"	"	5.5 V	5.5 V	1Y		250	μA
	I_{CEX}		50	5.5 V	GND	5.5 V	GND	GND	5.5 V	"		5.5 V	5.5 V	"	"	5.5 V	5.5 V	2Y		250	μA
2	Same tests, terminal conditions and limits as subgroup 1, except T_C = 125°C and V_{IC} tests are omitted. (V_{IL} = 0.7 V and V_{OL} (max) = 0.45 V).																				
3	Same tests, terminal conditions and limits as subgroup 1, except T_C = -55°C and V_{IC} tests are omitted.																				

TABLE III. Group A inspection for device type 01 - Continued.
Terminal conditions (pins not designated may be high ≥ 2.0 V, low ≤ 0.8 V, or open)

Subgroup	Symbol	MIL-STD-883 method	Cases A, B,C,D Test no.	1 1A	2 2A	3 2B	4 2C	5 2D	6 2Y	7 GND	8 1Y	9 1C	10 1D	11 NC	12 NC	13 1B	14 V_{CC}	Measured terminal	Limits Min	Limits Max	Unit
9 T_C = 25°C	t_{PHL}	3003	51	IN	GND	GND	GND	GND		GND	OUT	GND	GND	GND	GND	2.7 V	5.0 V	1A to 1Y	2.0	8.0	ns
	t_{PHL}	Fig. 4	52	GND	IN	2.7 V	"	"	OUT	"		"	"	"	"	GND	"	2A to 2Y	"	8.0	"
	t_{PLH}	"	53	IN	GND	GND	"	"		"	OUT	"	"	"	"	2.7 V	"	1A to 1Y	"	7.0	"
	t_{PLH}	"	54	GND	IN	2.7 V	"	"	OUT	"		"	"	"	"	GND	"	2A to 2Y	"	7.0	"
10 T_C = 125°C	t_{PHL}	"	55	IN	GND	GND	"	"		"	OUT	"	"	"	"	2.7 V	"	1A to 1Y	"	10.0	"
	t_{PHL}	"	56	GND	IN	2.7 V	"	"	OUT	"		"	"	"	"	GND	"	2A to 2Y	"	10.0	"
	t_{PLH}	"	57	IN	GND	GND	"	"		"	OUT	"	"	"	"	2.7 V	"	1A to 1Y	"	9.0	"
	t_{PLH}	"	58	GND	IN	2.7 V	"	"	OUT	"		GND	GND	"	"	GND	"	2A to 2Y	"	9.0	"
11	Same tests, terminal conditions and limits as for subgroup 10, except T_C = -55°C.																				

TABLE III. Group A inspection, device type 02.
Terminal conditions (pins not designated may be $\geq$ 2.0 V, low $\leq$ 0.8 V, or open)

Subgroup	Symbol	MIL-STD-883 method	Cases A, B,C,D Test no.	1 A	2 E	3 F	4 G	5 H	6 I	7 GND	8 Y	9 J	10 K	11 B	12 C	13 D	14 V_{CC}	Measured terminal	Limits Min	Limits Max	Unit
1 T_C = 25°C	V_{OH}	3006	1	0.8 V	0.8 V	5.5 V	0.8 V	5.5 V	5.5 V	GND	-1 mA	0.8 V	5.5 V	5.5 V	5.5 V	5.5 V	4.5 V	Y	2.5		V
		"	2	5.5 V	5.5 V	0.8 V	5.5 V	0.8 V	5.5 V	"	"	5.5 V	0.8 V	0.8 V	5.5 V	5.5 V	"	"	"		"
		"	3	5.5 V	5.5 V	0.8 V	5.5 V	5.5 V	0.8 V	"	"	5.5 V	0.8 V	5.5 V	0.8 V	5.5 V	"	"	"		"
		"	4	5.5 V	5.5 V	0.8 V	5.5 V	5.5 V	0.8 V	"	"	5.5 V	0.8 V	5.5 V	5.5 V	0.8 V	"	"	"		"
	V_{OL}	3007	5	2.0 V	GND	GND	GND	GND	GND	"	20 mA	GND	GND	2.0 V	2.0 V	2.0 V	"	"		0.5	"
		"	6	GND	2.0 V	2.0 V	GND	GND	GND	"	"	GND	GND	GND	GND	GND	"	"		"	"
		"	7	GND	GND	GND	2.0 V	2.0 V	2.0 V	"	"	GND	GND	GND	GND	GND	"	"		"	"
		"	8	GND	GND	GND	GND	GND	GND	"	"	2.0 V	2.0 V	GND	GND	GND	"	"		"	"
	I_{IL}	3009	9	0.5 V	5.5 V	5.5 V	5.5 V	5.5 V	5.5 V	"		5.5 V	5.5 V	5.5 V	5.5 V	5.5 V	5.5 V	A	-1	-2	mA
		"	10	5.5 V	"	"	"	"	"	"		"	"	0.5 V	5.5 V	5.5 V	"	B	"	"	"
		"	11	"	"	"	"	"	"	"		"	"	5.5 V	0.5 V	5.5 V	"	C	"	"	"
		"	12	"	"	"	"	"	"	"		"	"	"	5.5 V	0.5 V	"	D	"	"	"
		"	13	"	0.5 V	"	"	"	"	"		"	"	"	"	5.5 V	"	E	"	"	"
		"	14	"	5.5 V	0.5 V	"	"	"	"		"	"	"	"	"	"	F	"	"	"
		"	15	"	"	5.5 V	0.5 V	"	"	"		"	"	"	"	"	"	G	"	"	"
		"	16	"	"	"	5.5 V	0.5 V	"	"		"	"	"	"	"	"	H	"	"	"
		"	17	"	"	"	"	5.5 V	0.5 V	"		"	"	"	"	"	"	I	"	"	"
		"	18	"	"	"	"	5.5 V	5.5 V	"		0.5 V	"	"	"	"	"	J	"	"	"
		"	19	"	"	"	"	5.5 V	5.5 V	"		5.5 V	0.5 V	"	"	"	"	K	"	"	"
	I_{IH1}	3010	20	2.7 V	GND	GND	GND	GND	GND	"		GND	GND	GND	GND	GND	"	A		50	µA
		"	21	GND	"	"	"	"	"	"		"	"	2.7 V	GND	GND	"	B		"	"
		"	22	"	"	"	"	"	"	"		"	"	GND	2.7 V	GND	"	C		"	"
		"	23	"	"	"	"	"	"	"		"	"	"	GND	2.7 V	"	D		"	"
		"	24	"	2.7 V	"	"	"	"	"		"	"	"	"	GND	"	E		"	"
		"	25	"	GND	2.7 V	"	"	"	"		"	"	"	"	"	"	F		"	"
		"	26	"	"	GND	2.7 V	"	"	"		"	"	"	"	"	"	G		"	"
		"	27	"	"	"	GND	2.7 V	"	"		"	"	"	"	"	"	H		"	"
		"	28	"	"	"	"	GND	2.7 V	"		"	"	"	"	"	"	I		"	"
		"	29	"	"	"	"	"	GND	"		2.7 V	"	"	"	"	"	J		"	"
		"	30	"	"	"	"	"	"	"		GND	2.7 V	"	"	"	"	K		"	"
	I_{IH2}	"	31	5.5 V	"	"	"	"	"	"		"	GND	"	"	"	"	A		1.0	mA
		"	32	GND	"	"	"	"	"	"		"	"	5.5 V	"	"	"	B		"	"
		"	33	"	"	"	"	"	"	"		"	"	GND	5.5 V	"	"	C		"	"
		"	34	"	"	"	"	"	"	"		"	"	"	GND	5.5 V	"	D		"	"
		"	35	"	5.5 V	"	"	"	"	"		"	"	"	"	GND	"	E		"	"
		"	36	"	GND	5.5 V	"	"	"	"		"	"	"	"	"	"	F		"	"
		"	37	"	"	GND	5.5 V	"	"	"		"	"	"	"	"	"	G		"	"
		"	38	"	"	"	GND	5.5 V	"	"		"	"	"	"	"	"	H		"	"
		"	39	"	"	"	"	GND	5.5 V	"		"	"	"	"	"	"	I		"	"
		"	40	"	"	"	"	"	GND	"		5.5 V	"	"	"	"	"	J		"	"
		"	41	"	"	"	"	"	"	"		GND	5.5 V	"	"	"	"	K		"	"
	I_{OS}	3011	42	"	"	"	"	"	"	"	GND	"	GND	"	"	"	"	Y	-40	-100	"
	I_{CCL}	3005	43	5.5 V	"	"	"	"	"	"		"	GND	5.5 V	5.5 V	5.5 V	"	V_{CC}		16	"
	I_{CCH}	3005	44	GND	"	"	"	"	"	"		"	GND	GND	GND	GND	"	V_{CC}		12.5	"
	V_{IC}		45	-18 mA						"							4.5 V	A		-1.2	V
			46		-18 mA					"							"	E		"	"
			47			-18 mA				"							"	F		"	"
			48				-18 mA			"							"	G		"	"
			49					-18 mA		"							"	H		"	"
			50						-18 mA	"							"	I		"	"
			51							"		-18 mA					"	J		"	"
			52							"			-18 mA				"	K		"	"
			53							"				-18 mA			"	B		"	"
			54							"					-18 mA		"	C		"	"
			55							"						-18 mA	"	D		"	"
	I_{CEX}		56	GND	GND	5.5 V	GND	5.5 V	5.5 V	"	5.5 V	GND	5.5 V	5.5 V	5.5 V	5.5 V	5.5 V	Y		250	µA
2	Same tests, terminal conditions and limits as for subgroup 1, except T_C = 125°C and V_{IC} tests are omitted. (V_{IL} = 0.7 V and V_{OL} (max) = 0.45 V).																				
3	Same tests, terminal conditions and limits as for subgroup 1, except T_C = -55°C and V_{IC} tests are omitted.																				

TABLE III. Group A inspection for device type 02 - Continued.
Terminal conditions (pins not designated may be high ≥ 2.0 V, low ≤ 0.8 V, or open)

Subgroup	Symbol	MIL-STD-883 method	Cases A, B,C,D Test no.	1 A	2 E	3 F	4 G	5 H	6 I	7 GND	8 Y	9 J	10 K	11 B	12 C	13 D	14 V_{CC}	Measured terminal	Limits Min	Limits Max	Unit
9 T_C = 25°C	t_{PHL}	3003 Fig. 4	57	IN	GND	GND	GND	GND	GND	GND	OUT	GND	GND	2.7 V	2.7 V	2.7 V	5.0 V	A to Y	2.0	8.0	ns
		"	58	GND	IN	2.7 V	GND	GND	GND	"	"	GND	GND	GND	GND	GND	"	E to Y	"	"	"
		"	59	GND	GND	GND	IN	2.7 V	2.7 V	"	"	GND	GND	GND	GND	GND	"	G to Y	"	"	"
		"	60	GND	GND	GND	GND	GND	GND	"	"	IN	2.7 V	GND	GND	GND	"	J to Y	"	"	"
	t_{PLH}	"	61	IN	GND	GND	GND	GND	GND	"	"	GND	GND	2.7 V	2.7 V	2.7 V	"	A to Y	"	7.0	"
		"	62	GND	IN	2.7 V	GND	GND	GND	"	"	GND	GND	GND	GND	GND	"	E to Y	"	"	"
		"	63	GND	GND	GND	IN	2.7 V	2.7 V	"	"	GND	GND	GND	GND	GND	"	G to Y	"	"	"
		"	64	GND	GND	GND	GND	GND	GND	"	"	IN	2.7 V	GND	GND	GND	"	J to Y	"	"	"
10 T_C = 125°C	t_{PHL}	"	65	IN	GND	GND	GND	GND	GND	"	"	GND	GND	2.7 V	2.7 V	2.7 V	"	A to Y	"	10.0	"
		"	66	GND	IN	2.7 V	GND	GND	GND	"	"	GND	GND	GND	GND	GND	"	E to Y	"	"	"
		"	67	GND	GND	GND	IN	2.7 V	2.7 V	"	"	GND	GND	GND	GND	GND	"	G to Y	"	"	"
		"	68	GND	GND	GND	GND	GND	GND	"	"	IN	2.7 V	GND	GND	GND	"	J to Y	"	"	"
	t_{PLH}	"	69	IN	GND	GND	GND	GND	GND	"	"	GND	GND	2.7 V	2.7 V	2.7 V	"	A to Y	"	9.0	"
		"	70	GND	IN	2.7 V	GND	GND	GND	"	"	GND	GND	GND	GND	GND	"	E to Y	"	"	"
		"	71	GND	GND	GND	IN	2.7 V	2.7 V	"	"	GND	GND	GND	GND	GND	"	G to Y	"	"	"
		"	72	GND	GND	GND	GND	GND	GND	"	"	IN	2.7 V	GND	GND	GND	"	J to Y	"	"	"
11	Same tests, terminal conditions and limits as fopr subgroup 10, except T_C = -55°C.																				

TABLE III. Group A inspecti[illegible] device type 03. 1/
Terminal conditions (pins not designated may[illegible] [illegible] ≥ 2.0 V, low ≤ 0.8 V, or open)

Subgroup	Symbol	MIL-STD-883 method	Cases A, B,C,D Test no.	1 A	2 E	3 F	4 G	5 H	6 I	7 GND	8 Y	9 J	10 K	11 B	12 C	13 D	14 V_{CC}	Measured terminal	Limits Min	Limits Max	Unit
1 T_C = 25°C	V_{OL}	3007	1	2.0 V	GND	GND	GND	GND	GND	GND	20 mA	GND	GND	2.0 V	2.0 V	2.0 V	4.5 V	Y		0.5	V
		"	2	GND	2.0 V	2.0 V	GND	GND	GND	"	"	GND	GND	GND	GND	GND	"	"		"	"
		"	3	GND	GND	GND	2.0 V	2.0 V	2.0 V	"	"	GND	GND	GND	GND	GND	"	"		"	"
		"	4	GND	GND	GND	GND	GND	GND	"	"	2.0 V	2.0 V	GND	GND	GND	"	"		"	"
	V_{IC}		5	-18 mA						"							5.5 V	A		-1.2	V
			6		-18 mA					"							"	E		"	"
			7			-18 mA				"							"	F		"	"
			8				-18 mA			"							"	G		"	"
			9					-18 mA		"							"	H		"	"
			10						-18 mA	"							"	I		"	"
			11							"		-18 mA					"	J		"	"
			12							"			-18 mA				"	K		"	"
			13							"				-18 mA			"	B		"	"
			14							"					-18 mA		"	C		"	"
			15							"						-18 mA	"	D		"	"
	I_{CEX}		16	GND	GND	5.5 V	GND	5.5 V	5.5 V	"	5.5 V	GND	5.5 V	5.5 V	5.5 V	5.5 V	4.5 V	Y		250	μA
			17	5.5 V	5.5 V	GND	5.5 V	GND	5.5 V	"	"	5.5 V	GND	GND	5.5 V	5.5 V	"	"		"	"
			18	5.5 V	5.5 V	GND	5.5 V	5.5 V	GND	"	"	5.5 V	GND	5.5 V	GND	5.5 V	"	"		"	"
			19	5.5 V	5.5 V	GND	5.5 V	5.5 V	GND	"	"	5.5 V	GND	5.5 V	5.5 V	GND	"	"		"	"
	I_{IH1}	3010	20	2.7 V	GND	GND	GND	GND	GND	"		GND	GND	GND	GND	GND	5.5 V	A		50	μA
		"	21	GND	"	"	"	"	"	"		"	"	2.7 V	GND	GND	"	B		"	"
		"	22	"	"	"	"	"	"	"		"	"	GND	2.7 V	GND	"	C		"	"
		"	23	"	"	"	"	"	"	"		"	"	"	GND	2.7 V	"	D		"	"
		"	24	"	2.7 V	"	"	"	"	"		"	"	"	"	GND	"	E		"	"
		"	25	"	GND	2.7 V	"	"	"	"		"	"	"	"	"	"	F		"	"
		"	26	"	"	GND	2.7 V	"	"	"		"	"	"	"	"	"	G		"	"
		"	27	"	"	"	GND	2.7 V	"	"		"	"	"	"	"	"	H		"	"
		"	28	"	"	"	"	GND	2.7 V	"		"	"	"	"	"	"	I		"	"
		"	29	"	"	"	"	"	GND	"		2.7 V	"	"	"	"	"	J		"	"
		"	30	"	"	"	"	"	"	"		GND	2.7 V	"	"	"	"	K		"	"
	I_{IH2}	"	31	5.5 V	"	"	"	"	"	"		"	GND	"	"	"	"	A		1.0	mA
		"	32	GND	"	"	"	"	"	"		"	"	5.5 V	"	"	"	B		"	"
		"	33	"	"	"	"	"	"	"		"	"	GND	5.5 V	"	"	C		"	"
		"	34	"	"	"	"	"	"	"		"	"	"	GND	5.5 V	"	D		"	"
		"	35	"	5.5 V	"	"	"	"	"		"	"	"	"	GND	"	E		"	"
		"	36	"	GND	5.5 V	"	"	"	"		"	"	"	"	"	"	F		"	"
		"	37	"	"	GND	5.5 V	"	"	"		"	"	"	"	"	"	G		"	"
		"	38	"	"	"	GND	5.5 V	"	"		"	"	"	"	"	"	H		"	"
		"	39	"	"	"	"	GND	5.5 V	"		"	"	"	"	"	"	I		"	"
		"	40	"	"	"	"	GND	GND	"		5.5 V	"	"	"	"	"	J		"	"
		"	41	"	"	"	"	GND	GND	"		GND	5.5 V	"	"	"	"	K		"	"
	I_{IL}	3009	42	0.5 V	5.5 V	5.5 V	5.5 V	5.5 V	5.5 V	"		5.5 V	"	5.5 V	5.5 V	5.5 V	"	A	-1	-2	"
		"	43	5.5 V	"	"	"	"	"	"		"	"	0.5 V	5.5 V	5.5 V	"	B	"	"	"
		"	44	"	"	"	"	"	"	"		"	"	5.5 V	0.5 V	5.5 V	"	C	"	"	"
		"	45	"	"	"	"	"	"	"		"	"	"	5.5 V	0.5 V	"	D	"	"	"
		"	46	"	0.5 V	"	"	"	"	"		"	"	"	"	5.5 V	"	E	"	"	"
		"	47	"	5.5 V	0.5 V	"	"	"	"		"	"	"	"	"	"	F	"	"	"
		"	48	"	"	5.5 V	0.5 V	"	"	"		"	"	"	"	"	"	G	"	"	"
		"	49	"	"	"	5.5 V	0.5 V	5.5 V	"		"	"	"	"	"	"	H	"	"	"
		"	50	"	"	"	"	5.5 V	0.5 V	"		"	"	"	"	"	"	I	"	"	"
		"	51	"	"	"	"	5.5 V	5.5 V	"		0.5 V	"	"	"	"	"	J	"	"	"
		"	52	"	"	"	"	5.5 V	5.5 V	"		5.5 V	0.5 V	"	"	"	"	K	"	"	"
	I_{CCL}	3005	53	5.5 V	GND	GND	GND	GND	GND	"		GND	GND	5.5 V	5.5 V	5.5 V	"	V_{CC}		16	"
	I_{CCH}	3005	54	GND	GND	GND	GND	GND	GND	"		GND	GND	GND	GND	GND	"	V_{CC}		11	"
2	Same tests, terminal conditions and limits as for subgroup 1, except T_C = 125°C and V_{IC} tests are omitted. (V_{OL} (max) = 0.45 V).																				
3	Same tests, terminal conditions and limits as for subgroup 1, except T_C = -55°C and V_{IC} tests are omitted.																				

See footnote at end of table.

TABLE III. Group A inspection for device type 03 - Continued. 1/
Terminal conditions (pins not designated may be high ≥ 2.0 V, low ≤ 0.8 V, or open)

Subgroup	Symbol	MIL-STD-883 method	Cases A, B,C,D Test no.	1 A	2 E	3 F	4 G	5 H	6 I	7 GND	8 Y	9 J	10 K	11 B	12 C	13 D	14 V_{CC}	Measured terminal	Limits Min	Limits Max	Unit
9 T_C = 25°C	t_{PHL}	3003 Fig. 4	55	IN	GND	GND	GND	GND	GND	GND	OUT	GND	GND	2.7 V	2.7 V	2.7 V	5.0 V	A to Y	2.0	10.0	ns
		"	56	GND	IN	2.7 V	GND	GND	GND	"	"	GND	GND	GND	GND	GND	"	E to Y	"	"	"
		"	57	GND	GND	GND	IN	2.7 V	2.7 V	"	"	GND	GND	GND	GND	GND	"	G to Y	"	"	"
		"	58	GND	GND	GND	GND	GND	GND	"	"	IN	2.7 V	GND	GND	GND	"	J to Y	"	"	"
	t_{PLH}	"	59	IN	GND	GND	GND	GND	GND	"	"	GND	GND	2.7 V	2.7 V	2.7 V	"	A to Y	"	12.0	"
		"	60	GND	IN	2.7 V	GND	GND	GND	"	"	GND	GND	GND	GND	GND	"	E to Y	"	"	"
		"	61	GND	GND	GND	IN	2.7 V	2.7 V	"	"	GND	GND	GND	GND	GND	"	G to Y	"	"	"
		"	62	GND	GND	GND	GND	GND	GND	"	"	IN	2.7 V	GND	GND	GND	"	J to Y	"	"	"
10 T_C = 125°C	t_{PHL}	"	63	IN	GND	GND	GND	GND	GND	"	"	GND	GND	2.7 V	2.7 V	2.7 V	"	A to Y	"	13.0	"
		"	64	GND	IN	2.7 V	GND	GND	GND	"	"	GND	GND	GND	GND	GND	"	E to Y	"	"	"
		"	65	GND	GND	GND	IN	2.7 V	2.7 V	"	"	GND	GND	GND	GND	GND	"	G to Y	"	"	"
		"	66	GND	GND	GND	GND	GND	GND	"	"	IN	2.7 V	GND	GND	GND	"	J to Y	"	"	"
	t_{PLH}	"	67	IN	GND	GND	GND	GND	GND	"	"	GND	GND	2.7 V	2.7 V	2.7 V	"	A to Y	"	16.0	"
		"	68	GND	IN	2.7 V	GND	GND	GND	"	"	GND	GND	GND	GND	GND	"	E to Y	"	"	"
		"	69	GND	GND	GND	IN	2.7 V	2.7 V	"	"	GND	GND	GND	GND	GND	"	G to Y	"	"	"
		"	70	GND	GND	GND	GND	GND	GND	"	"	IN	2.7 V	GND	GND	GND	"	J to Y	"	"	"
11	Same tests, terminal conditions and limits as for subgroup 10, except T_C = -55°C																				

1/ Qualification requirements removed for device type 03.

4.4.4 Group D inspection. Group D inspection shall be in accordance with table IV of method 5005 of MIL-STD-883. End-point electrical parameters shall be as specified in table II herein.

4.5 Methods of inspection. Methods of inspection shall be specified as follows:

4.5.1 Voltage and current. All voltages given are referenced to the microcircuit ground terminal. Currents given are conventional and positive when flowing into the referenced terminal.

5. PACKAGING

5.1 Packaging requirements. The requirements for packaging shall be in accordance with MIL-M-38510.

6. NOTES

6.1 Intended use. Microcircuits conforming to this specification are intended for original equipment design applications and logisitic support of existing equipment, with the exception of device type 03, which is intended for logistic support of existing equipment.

6.2 Ordering data. The acquisition document should specify the following:

a. Complete part number (see 1.2).

b. Requirements for delivery of one copy of the quality conformance inspection data pertinent to the device inspection lot to be supplied with each shipment by the device manufacturer, if applicable.

c. Requirements for certificate of compliance, if applicable.

d. Requirements for notification of change of product or process to the contracting activity for device type 03. In addition, notification to the qualifying activity is required for device types 01 and 02, if applicable.

e. For device types 01 and 02, requirements for failure analysis (including required test condition of method 5003 of MIL-STD-883), corrective action, and reporting of results, if applicable.

f. Requirements for packaging and packing, device type 03. Requirement for product assurance options, device types 01 and 02.

g. Requirements for special carriers, lead lengths, or lead forming, if applicable. These requirements shall not affect the part number. Unless otherwise specified, these requirements shall not apply to direct purchase by or direct shipment to the Government.

h. Requirements for "JAN" marking. This applies to device types 01 and 02 only.

6.3 Abbreviations, symbols, and definitions. The abbreviations, symbols, and definitions used herein are defined in MIL-M-38510, MIL-STD-1331, and as follows:

GND - - - - - - - - - - - - - - Ground zero voltage potential.
I_{IN} - - - - - - - - - - - - - - Current flowing into an input terminal.
V_{IN} - - - - - - - - - - - - - - Voltage level at an input terminal.

6.4 Logistic support. Lead materials and finishes (see 3.3) are interchangeable. Unless otherwise specified, microcircuits acquired for Government logistic support will be acquired to device class B (see 1.2.2), lead material and finish C (see 3.3). Longer length leads and lead forming shall not affect the part number.

6.5 Generic test data. Generic test data may be used to satisfy the requirements of 4.4.3. Group C generic test data shall be on date codes no more than one year old and on a die in the same microcircuit group (see appendix E of MIL-M-38510) with the same material, design and process and from the same plant as the die represented. Group D (see 4.4.3) generic data shall be on date codes no more than one year old and on the same package type (see terms, definitions and symbols of MIL-M-38510) and from the same plant as the package represented. The vendor is required to retain the generic data for a period of not less than 36 months from the date of shipment. This shall apply only to device type 03.

6.6 Substitutability. The cross-reference information below is presented for the convenience of users. Microcircuits covered by this specification will functionally replace the listed generic-industry type. Generic-industry microcircuit types may not have equivalent operational performance characteristics across military temperature ranges or reliability factors equivalent to MIL-M-38510 device types and may have slight physical variations in relation to case size. The presence of this information shall not be deemed as permitting substitution of generic-industry types for MIL-M-38510 types or as a waiver of any of the provisions of MIL-M-38510.

Military device type	Generic-industry type
01	54S51
02	54S64
03 1/	54S65

6.7 Manufacturers' designators. Manufacturers' circuits which form a part of this specification are designated with an "X" as shown in table IV herein.

TABLE IV. Manufacturers' designations.

Device type	Circuit			
	A	B	C	D
	Texas Instrument	Signetics Corp.	Fairchild Semiconductor	National Semiconductor
01	X	X	X	X
02	X	X	X	X

6.8 Ordering guidance. Since the qualification and certification requirements have been removed from the specification for device type 03, orders may be placed immediately.

6.9 Changes from previous issue. Asterisks are not used in this revision to identify changes with respect to the previous issue, due to the extensiveness of the changes.

1/ Qualification requirements removed for this device type.

Custodians:
Army - ER
Navy - EC
Air Force - 17

Review activities:
Army - AR, MI
Navy - OS, SH, TD
Air Force - 11, 19, 85, 99
DLA - ES

User activities:
Army - SM
Navy - AS, CG, MC

Preparing activity:
Air Force - 17

Agent:
DLA - ES

(Project 5962-0890-3)