MILITARY SPECIFICATION

MICROCIRCUITS, DIGITAL, BIPOLAR, SCHOTTKY TTL, DATA SELECTORS/MULTIPLEXERS WITH THREE-STATE OUTPUTS, MONOLITHIC SILICON

This specification is approved for use by all Departments and Agencies of the Department of Defense.

1. SCOPE

1.1 Scope. This specification covers the detail requirements for monolithic silicon, Schottky TTL, data selectors/multiplexers (three-state) microcircuits. Two product assurance classes and a choice of case outlines and lead finishes are provided and are reflected in the complete part number.

1.2 Part number. The complete part number shall be in accordance with MIL-M-38510, and as specified herein.

1.2.1 Device type. The device type shall be as follows:

Device type	Circuit
01	8-input, data selector/multiplexer
02	Dual, 4-input, data selector/multiplexer
03	Quad, 2-input, data selector/multiplexer
04	Quad, 2-input, data selector/multiplexer with inverted output
05	8-input, data selector/multiplexer with 3-state outputs
06	Quad, 2-input, data selector/multiplexer with 3-state outputs
07	Quad, 2-input, data selector/multiplexer with 3-state inverted output
08	Dual, 4-input, data selector/multiplexer with 3-state outputs

1.2.2 Device class. The device class shall be the product assurance level as defined in MIL-M-38510.

1.2.3 Case outline. The case outline shall be designated as follows:

Outline letter	Case outline (see MIL-M-38510, appendix C)
E	D-2 (16-lead, 1/4" x 7/8") dual-in-line package
F	F-5 (16-lead, 1/4" x 3/8") flat package
2	C-2 (20-terminal, .350" x .350"), square chip carrier package
X	C-2A (20-terminal, .350" x .350"), square chip carrier package

1.3 Absolute maximum ratings.

Supply voltage range- - - - - - - - - - - - - -0.5 V dc to +7.0 V dc
Input voltage range - - - - - - - - - - - - - -1.2 V dc at -18 mA to +5.5 V dc
Storage temperature range - - - - - - - - - -65°C to +150°C

Beneficial comments (recommendations, additions, deletions) and any pertinent data which may be of use in improving this document should be addressed to: Rome Air Development Center (RBE-2), Griffiss AFB, NY 13441, by using the self-addressed Standardization Document Improvement Proposal (DD Form 1426) appearing at the end of this document or by letter.

DISTRIBUTION STATEMENT A. Approved for public release; distribution is unlimited.

Maximum power dissipation (P_D) 1/:	
Device types 01 and 02- - - - - - - - - -	385 mW
Device type 03- - - - - - - - - - - - - -	430 mW
Device type 04- - - - - - - - - - - - - -	336 mW
Device type 05- - - - - - - - - - - - - -	468 mW
Device type 06- - - - - - - - - - - - - -	545 mW
Device type 07- - - - - - - - - - - - - -	479 mW
Device type 08- - - - - - - - - - - - - -	550 mW
Lead temperature (soldering, 10 seconds)-	300°C
Thermal resistance, junction-to-case (θ_{JC}):	
Cases E, F, 2, and X- - - - - - - - - - -	(See MIl-M-38510, appendix C)
Junction temperature (T_J) 2/ - - - - - -	+175°C

1.4 Recommended operating conditions.

Supply voltage (V_{CC})- - - - - - - - - - - -	4.5 V dc minimum to 5.5 V dc maximum
Minimum high-level input voltage (V_{IH})- -	2.0 V dc
Maximum low-level input voltage (V_{IL}) 3/-	0.8 V dc
Case operating temperature range (T_C) - -	-55°C to +125°C

2. APPLICABLE DOCUMENTS

2.1 Government documents.

2.1.1 Specification and standard. The following specification and standard form a part of this specification to the extent specified herein. Unless otherwise specified, the issues of these documents shall be those listed in the issue of the Department of Defense Index of Specifications and Standards and supplement thereto, cited in the solicitation.

SPECIFICATION

MILITARY

MIL-M-38510 - Microcircuits, General Specification for.

STANDARD

MILITARY

MIL-STD-883 - Test Methods and Procedures for Microelectronics.

(Copies of the specification and standard required by contractors in connection with specific acquisition functions should be obtained from the contracting activity or as directed by the contracting activity.)

2.2 Order of precedence. In the event of a conflict between the text of this specification and the references cited herein (except for associated detail specifications, specification sheets or MS standards), the text of this specification shall take precedence. Nothing in this specification, however, shall supersede applicable laws and regulations unless a specific exemption has been obtained.

3. REQUIREMENTS

3.1 Detail specification. The individual item requirements shall be in accordance with MIL-M-38510, and as specified herein.

3.2 Design, construction, and physical dimensions. The design, construction, and physical dimensions shall be as specified in MIL-M-38510 and herein.

1/ Must withstand the added P_D due to short circuit condition (e.g., I_{OS}) test.

2/ Maximum junction temperature shall not be exceeded except for allowable short duration burn-in screening conditions per method 5004 of MIL-STD-883.

3/ V_{IL} = 0.7 V at 125°C.

TABLE I. Electrical performance characteristics.

Test	Symbol	Conditions $-55^{\circ}C \leq T_C \leq +125^{\circ}C$ unless otherwise specified		Device type	Limits Min	Limits Max	Unit
High-level output voltage	V_{OH}	V_{CC} = 4.5 V; V_{IL} = 0.8 V I_{OH} = -1.0 mA @T_C = 125°C, V_{IL} = 0.7 V		01,02 03,04	2.5		V
		V_{CC} = 4.5 V; V_{IL} = 0.8 V I_{OH} = -2.0 mA @T_C = 125°C, V_{IL} = 0.7 V		05,06	2.4		
		V_{CC} = 4.5 V; V_{IL} = 0.8 V I_{OH} = -1.0 mA @T_C = 125°C, V_{IL} = 0.7 V		07,08			
Low-level output voltage	V_{OL}	V_{CC} = 4.5 V I_{OL} = 20 mA		All		.5	V
		T_C = 125°C		All		.45	V
Input clamp voltage	V_{IC}	V_{CC} = 4.5 V I_{IN} = -18 mA, T_C = 25°C		All		-1.2	V
Off-state output current	I_{OFF1}	V_{CC} = 5.5 V V_O = 2.7 V		05,06 07,08		50	µA
Off-state output current	I_{OFF2}	V_{CC} = 5.5 V V_O = 0.5 V		05,06 07,08		-50	µA
High-level input current	I_{IH1}	V_{CC} = 5.5 V V_{IN} = 2.7 V	All inputs	01,02 05,08		50	µA
			A and B inputs	03,04			
			All inputs except S	06,07			
			S and G inputs	03,04		100	
			S input	06,07			
High-level input current	I_{IH2}	V_{CC} = 5.5 V V_{IN} = 5.5 V	All inputs	All		1.0	mA
Low-level input current	I_{IL}	V_{CC} = 5.5 V V_{IN} = 0.5 V	All inputs	01,02 05,08	-1.0	-2.0	mA
			A and B inputs	03,04	0.1		
			All inputs except S	06,07	-1.0		
			S and G inputs	03,04	0.1	-4.0	
			S input	06,07	-2.0	-4.0	

See footnote at end of table.

TABLE I. Electrical performance characteristics - Continued.

Test	Symbol	Conditions $-55^{\circ}C \leq T_C \leq +125^{\circ}C$ unless otherwise specified	Device type	Limits Min	Limits Max	Unit
Short circuit output current	I_{OS}	V_{CC} = 5.5 V 1/	All	-40	-110	mA
Supply current	I_{CC}	V_{CC} = 5.5 V	01,02		70	mA
			03		78	
			04		61	
Supply current	I_{CCO}	V_{CC} = 5.5 V V_{IN} = 5.5 V	05		85	mA
			06		99	
			07		87	
			08		100	
Supply current	I_{CC1}	V_{CC} = 5.5 V	08		80	mA
Collector cut-off current	I_{CEX}	V_{CC} = 5.5 V, V_{OH} = 5.5 V V_{IL} = GND, V_{IH} = 5.5 V	01 thru 08		250	µA
Low-level supply current	I_{CCL}	V_{CC} = 5.5 V	06		93	mA
			07		81	
High-level supply current	I_{CCH}	V_{CC} = 5.5 V	06		68	mA
			07		56	
From A, B, C, to Y	t_{PLH2}	V_{CC} = 5.0 V C_L = 50 pF R_L = 280Ω	01	2.0	26.0	ns
From A, B, C, to Y	t_{PHL2}		01	2.0	26.0	ns
From A, B, C, to W	t_{PLH1}		01	2.0	22.0	ns
From A, B, C, to W	t_{PHL1}		01	2.0	20.0	ns
From any D to Y	t_{PLH6}		01	2.0	18.0	ns
From any D to Y	t_{PHL6}		01	2.0	18.0	ns
From any D to W	t_{PLH5}		01	2.0	11.5	ns

See footnote at end of table.

TABLE I. Electrical performance characteristics - Continued.

Test	Symbol	Conditions $-55^{\circ}C \leq T_C \leq +125^{\circ}C$ unless otherwise specified	Device type	Limits Min	Limits Max	Unit
From any D to W	t_{PHL5}	V_{CC} = 5.0 V C_L = 50 pF R_L = 280Ω	01	2.0	11.5	ns
From strobe to Y	t_{PLH4}		01	2.0	24.0	ns
From strobe to Y	t_{PHL4}		01	2.0	26.0	ns
From strobe to W	t_{PLH3}		01	2.0	19.5	ns
From strobe to W	t_{PHL3}		01	2.0	18.0	ns
From data to Y	t_{PLH1}		02,08	2.0	14.5	ns
From data to Y	t_{PHL1}		02,08	2.0	14.5	ns
From select to Y	t_{PLH2}		02,08	2.0	26.0	ns
From select to Y	t_{PHL2}		02,08	2.0	26.0	ns
From strobe to Y	t_{PLH3}		02	2.0	22.0	ns
From strobe to Y	t_{PHL3}		02	2.0	21.0	ns
From data to Y	t_{PLH2}		03	2.0	12.0	ns
			04		11.0	
From data to Y	t_{PHL2}		03	2.0	12.0	ns
			04		11.0	
From strobe to Y	t_{PLH3}		03	2.0	18.0	ns
			04		18.0	
From strobe to Y	t_{PHL3}		03	2.0	18.5	ns
			04		18.5	

See footnotes at end of table.

TABLE I. Electrical performance characteristics - Continued.

Test	Symbol	Conditions $-55^{\circ}C \leq T_C \leq +125^{\circ}C$ unless otherwise specified	Device type	Limits Min	Limits Max	Unit
From select to Y	t_{PLH1}	V_{CC} = 5.0 V C_L = 50 pF R_L = 280Ω	03	2.0	18.5	ns
			04		18.5	
From select to Y	t_{PHL1}		03	2.0	18.5	ns
			04		18.5	
From A, B, C to Y	t_{PLH2}		05	2.0	26.0	ns
From A, B, C to Y	t_{PHL2}		05	2.0	28.0	ns
From A, B, C to W	t_{PLH1}		05	2.0	22.0	ns
From A, B, C to W	t_{PHL1}		05	2.0	20.0	ns
From any D to Y	t_{PLH4}		05	2.0	18.0	ns
From any D to Y	t_{PHL4}		05	2.0	18.0	ns
From any D to W	t_{PLH3}		05	2.0	11.5	ns
From any D to W	t_{PHL3}		05	2.0	11.5	ns
From strobe to Y	t_{ZH3}		05	2.0	25.5	ns
From strobe to Y	t_{ZL3}		05	2.0	27.5	ns
From strobe to Y	t_{HZ4}		05	2.0	24.0	ns
From strobe to Y	t_{LZ4}		05	2.0	22.0	ns
From strobe to W	t_{ZH1}		05	2.0	25.5	ns
From strobe to W	t_{ZL1}		05	2.0	27.5	ns
From strobe to W	t_{HZ2}		05	2.0	24.0	ns

See footnotes at end of table.

TABLE I. Electrical performance characteristics - Continued.

Test	Symbol	Conditions $-55^{\circ}C \leq T_C \leq +125^{\circ}C$ unless otherwise specified	Device type	Limits Min	Limits Max	Unit
From strobe to W	t_{LZ2}	V_{CC} = 5.0 V C_L = 50 pF R_L = 280Ω	05	2.0	22.0	ns
From select to Y	t_{PLH1}		06	2.0	22.0	ns
			07		18.5	
From select to Y	t_{PHL1}		06	2.0	22.0	ns
			07		18.5	
From data to Y	t_{PLH2}		06	2.0	12.0	ns
			07		10.0	
From data to Y	t_{PHL2}		06	2.0	11.0	ns
			07		10.0	
From output control to Y	t_{ZH}		05,06	2.0	28.0	ns
			07		28.0	
			08		30.0	
From output control to Y	t_{ZL}		05,06	2.0	30.0	ns
			07		30.0	
			08		31.0	
From output control to Y	t_{HZ}		05,06	2.0	24.0	ns
			07		24.0	
			08		18.0	
From output control to Y	t_{LZ}		05,06	2.0	22.0	ns
			07		22.0	
			08		20.0	

1/ Not more than one output should be shorted at one time.

3.2.1 Terminal connections. The terminal connections shall be as specified on figure 1.

3.2.2 Truth tables. The truth tables shall be as specified on figure 2.

3.2.3 Schematic circuits. Schematic circuits shall be submitted to the preparing activity prior to inclusion of a manufacturer's device in the specification and shall be submitted to the qualifying activity and agent activity (DESC-ECS) as a prerequisite for qualification. All qualified manufacturers' schematics shall be maintained by the agent activity and will be available upon request.

3.3 Lead material and finish. The lead material and finish shall be in accordance with MIL-M-38510 (see 6.4).

3.4 Electrical performance characteristics. Unless otherwise specified, the electrical performance characteristics are as specified in table I, and apply over the full recommended case operating temperature range.

3.5 Electrical test requirements. The electrical test requirements for each device class shall be the subgroups specified in table II. The electrical tests for each subgroup are described in table III.

3.6 Marking. Marking shall be in accordance with MIL-M-38510 and 1.2 herein.

3.7 Microcircuit group assignment. The devices covered by this specification shall be in microcircuit group number 11 (see MIL-M-38510, appendix E).

TABLE II. Electrical test requirements.

MIL-STD-883 test requirements	Subgroups (see table III)	
	Class S devices	Class B devices
Interim electrical parameters (method 5004)	1	1
Final electrical test parameters (method 5004)	1*,2,3,7,9,10,11	1*,2,3,7,9
Group A test requirements (method 5005)	1,2,3,7,8,9,10,11	1,2,3,7,8,9,10,11
Group B test requirements (method 5005) subgroup 5	1,2,3,7,8,9,10,11	N/A
Group C end-point electrical parameters (method 5005)	N/A	1,2,3
Group D end-point electrical parameters (method 5005)	1,2,3	1,2,3

* PDA applies to subgroup 1 (see 4.2c).

Pin number Case		Pin name Device type 01		Pin name Device type 02		Pin name Device type 03		Pin name Device type 04		Pin name Device type 05		Pin name Device type 06		Pin name Device type 07		Pin name Device type 08	
2, X	E, F	2, X	E, F	2, X	E, F	2, X	E, F	2, X	E, F	2, X	E, F	2, X	E, F	2, X	E, F	2, X	E, F
1	1	NC	D3	NC	1G	NC	S	NC	S	NC	D3	NC	S	NC	S	NC	1G
2	2	D3	D2	1G	B	S	1A	S	1A	D3	D2	S	1A	S	1A	1G	B
3	3	D2	D1	B	1C3	1A	1B	1A	1B	D2	D1	1A	1B	1A	1B	B	1C3
4	4	D1	D0	1C3	1C2	1B	1Y	1B	1Y	D1	D0	1B	1Y	1B	1Y	1C3	1C2
5	5	D0	Y	1C2	1C1	1Y	2A	1Y	2A	D0	Y	1Y	2A	1Y	2A	1C2	1C1
6	6	NC	W	NC	1C0	NC	2B	NC	2B	NC	W	NC	2B	NC	2B	NC	1C0
7	7	Y	ST	1C1	1Y	2A	2Y	2A	2Y	Y	ST	2A	2Y	2A	2Y	1C1	1Y
8	8	W	GND	1C0	GND	2B	GND	2B	GND	W	GND	2B	GND	2B	GND	1C0	GND
9	9	ST	C	1Y	2Y	2Y	3Y	2Y	3Y	ST	C	2Y	3Y	2Y	3Y	1Y	2Y
10	10	GND	B	GND	2C0	GND	3B	GND	3B	GND	B	GND	3B	GND	3B	GND	2C0
11	11	NC	A	NC	2C1	NC	3A	NC	3A	NC	A	NC	3A	NC	3A	NC	2C1
12	12	C	D7	2Y	2C2	3Y	4Y	3Y	4Y	C	D7	3Y	4Y	3Y	4Y	2Y	2C2
13	13	B	D6	2C0	2C3	3B	4B	3B	4B	B	D6	3B	4B	3B	4B	2C0	2C3
14	14	A	D5	2C1	A	3A	4A	3A	4A	A	D5	3A	4A	3A	4A	2C1	A
15	15	D7	D4	2C2	2G	4Y	G	4Y	G	D7	D4	4Y	OE	4Y	OE	2C2	2G
16	16	NC	V_{CC}	NC	V_{CC}	NC	V_{CC}	NC	V_{CC}	NC	V_{CC}	NC	V_{CC}	NC	V_{CC}	NC	V_{CC}
17		D6		2C3		4B		4B		D6		4B		4B		2C3	
18		D5		A		4A		4A		D5		4A		4A		A	
19		D4		2G		G		G		D4		OE		OE		2G	
20		V_{CC}		V_{CC}		V_{CC}		V_{CC}		V_{CC}		V_{CC}		V_{CC}		V_{CC}	

FIGURE 1. Terminal connections.

Device types 01 and 05

Inputs													Outputs			
Select			Strobe	Data									Type 01		Type 05	
C	B	A	S	D0	D1	D2	D3	D4	D5	D6	D7		Y	W	Y	W
X	X	X	H	X	X	X	X	X	X	X	X		L	H	Z	Z
L	L	L	L	L	X	X	X	X	X	X	X		L	H	L	H
L	L	L	L	H	X	X	X	X	X	X	X		H	L	H	L
L	L	H	L	X	L	X	X	X	X	X	X		L	H	L	H
L	L	H	L	X	H	X	X	X	X	X	X		H	L	H	L
L	H	L	L	X	X	L	X	X	X	X	X		L	H	L	H
L	H	L	L	X	X	H	X	X	X	X	X		H	L	H	L
L	H	H	L	X	X	X	L	X	X	X	X		L	H	L	H
L	H	H	L	X	X	X	H	X	X	X	X		H	L	H	L
H	L	L	L	X	X	X	X	L	X	X	X		L	H	L	H
H	L	L	L	X	X	X	X	H	X	X	X		H	L	H	L
H	L	H	L	X	X	X	X	X	L	X	X		L	H	L	H
H	L	H	L	X	X	X	X	X	H	X	X		H	L	H	L
H	H	L	L	X	X	X	X	X	X	L	X		L	H	L	H
H	H	L	L	X	X	X	X	X	X	H	X		H	L	H	L
H	H	H	L	X	X	X	X	X	X	X	L		L	H	L	H
H	H	H	L	X	X	X	X	X	X	X	H		H	L	H	L

H = high logic level
L = low logic level

Z = high impedance
X = irrelevant

FIGURE 2. Truth tables.

Device type 02

Select inputs		Data inputs				Strobe	Output
B	A	C0	C1	C2	C3	G	Y
X	X	X	X	X	X	H	L
L	L	L	X	X	X	L	L
L	L	H	X	X	X	L	H
L	H	X	L	X	X	L	L
L	H	X	H	X	X	L	H
H	L	X	X	L	X	L	L
H	L	X	X	H	X	L	H
H	H	X	X	X	L	L	L
H	H	X	X	X	H	L	H

Address inputs A and B are common to both sections.
H = high level, L = low level, X = irrelevant.

Device types 03 and 04

Inputs				Output Y	
Strobe	Select	A	B	Type 03	Type 04
H	X	X	X	L	H
L	L	L	X	L	H
L	L	H	X	H	L
L	H	X	L	L	H
L	H	X	H	H	L

H = high level, L = low level, X = irrelevant.

FIGURE 2. Truth tables - Continued.

Device types 06 and 07

Function table

Inputs			Output Y	
Output control	Select	A B	Type 06	Type 07
H	X	X X	Z	Z
L	L	L X	L	H
L	L	H X	H	L
L	H	X L	L	H
L	H	X H	H	L

H = high level, L = low level, X = irrelevant,
Z = high impedance (off).

Device type 08

Select inputs		Data inputs	Output control	Output
B	A	C0 C1 C2 C3	G	Y
X	X	X X X X	H	Z
L	L	L X X X	L	L
L	L	H X X X	L	H
L	H	X L X X	L	L
L	H	X H X X	L	H
H	L	X X L X	L	L
H	L	X X H X	L	H
H	H	X X X L	L	L
H	H	X X X H	L	H

Address inputs A and B are common to both sections.
H = high level, L = low level, X = irrelevant,
Z = high impedance (off).

FIGURE 2. Truth tables - Continued.

Device types 01 and 05

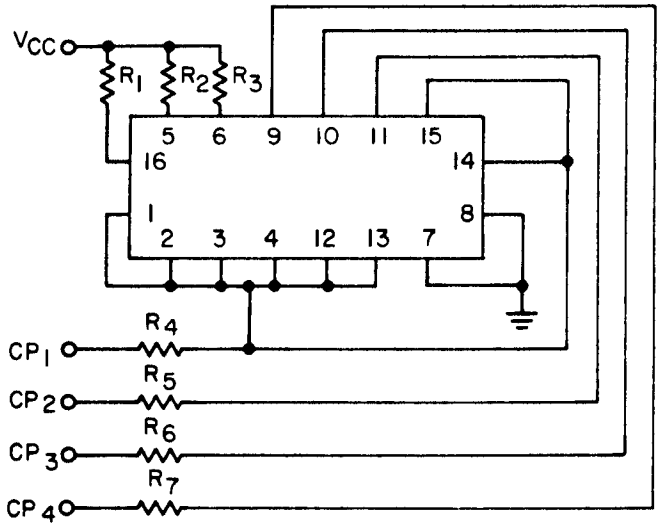

NOTES:
1. R_2, R_3 = 220Ω ±5%.
   R_4 through R_7 = 27Ω ±5%.
2. CP_1 = 100 kHz ±50%; CP_2 = 50 kHz ±50%; CP_3 = 25 kHz ±50%; CP_4 = 12.5 kHz ±50%; square wave; duty cycle = 50 ±15%; V_{IL} = -0.5 V minimum to 0.8 V maximum; V_{IH} = 2.0 V minimum to 5.5 V maximum.
3. V_{CC} and R_1 shall be chosen to insure 5.0 V minimum is present at device V_{CC} terminal.

FIGURE 3. Burn-in and life test circuits.

Device types 01 and 05 - Alternate circuit.

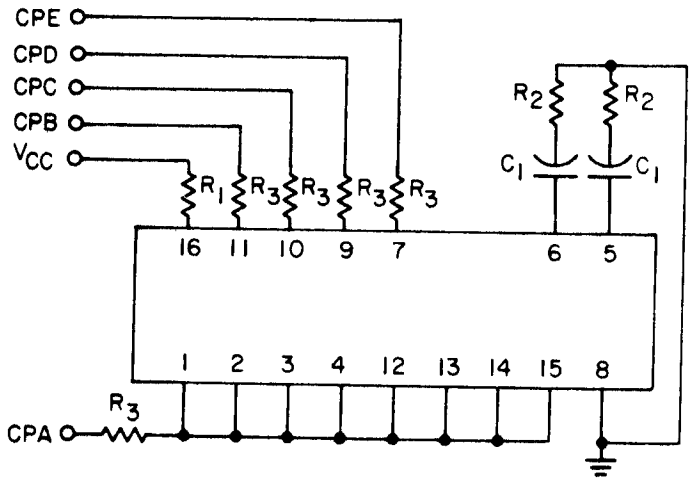

NOTES:

1. R_2 = 75Ω ±5%.
   R_3 = 27Ω ±5%.
2. C_1 = .047 μF.
3. CPA = 100 kHz ±50%; CPB = 50 kHz ±50%;
   CPC = 25 kHz ±50%; CPD = 12.5 kHz ±50%;
   CPE = 6.25 ±50%; square waves; duty cycle = 50 ±15%;
   V_{IL} = -0.5 V minimum to 0.8 V maximum; V_{IH} = 2.0 V minimum to 5.5 V maximum.
4. V_{CC} and R_1 shall be chosen to insure a 5.0 V minimum is present at the device V_{CC} terminal.

FIGURE 3. Burn-in and life test circuits - Continued.

Device type 02

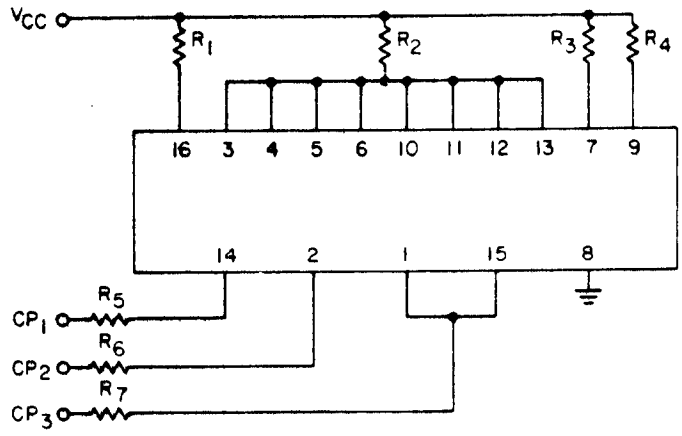

NOTES:

1. $R_2 = R_3 = R_4 = 220\Omega \pm 5\%$.
   $R_5 = R_6 = R_7 = 27\Omega \pm 5\%$.
2. CP_1 = 100 kHz ±50%; CP_2 = 50 kHz ±50%; CP_3 = 25 kHz ±50%; square waves; duty cycle = 50 ±15%; V_{IL} = -0.5 V minimum to 0.8 V maximum; V_{IH} = 2.0 V minimum to 5.5 V maximum.
3. V_{CC} and R_1 shall be chosen to insure a 5.0 V minimum at the device V_{CC} terminal.

FIGURE 3. Burn-in and life test circuits - Continued.

Device types 03, 04, 06 and 07

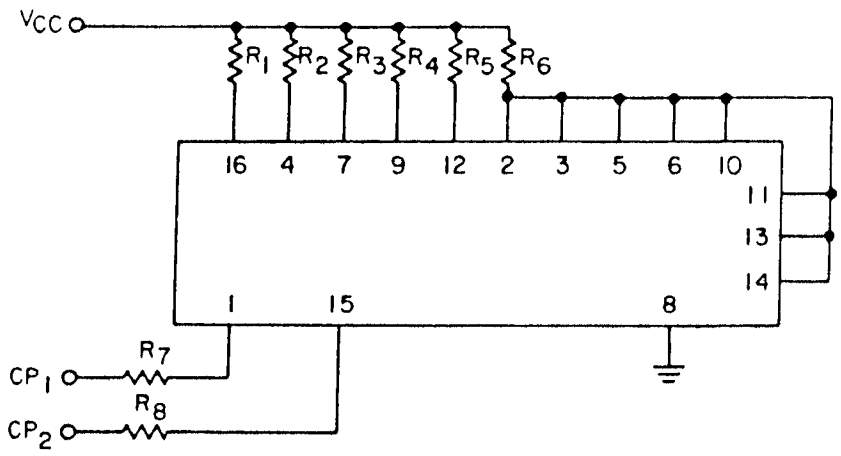

NOTES:
1. R_2 through R_6 = 270Ω ±5%.
   R_7 and R_8 = 27Ω ±5%.
2. CP_1 = 100 kHz ±50%; CP_2 = 50 kHz ±50%; square waves; duty cycle = 50 ±15%; V_{IL} = -0.5 V minimum to 0.8 V maximum; V_{IH} = 2.0 V minimum to 5.5 V maximum.
3. V_{CC} and R_1 shall be chosen to insure a 5.0 V minimum at the device V_{CC} terminal.

FIGURE 3. Burn-in and life test circuits - Continued.

Device type 08

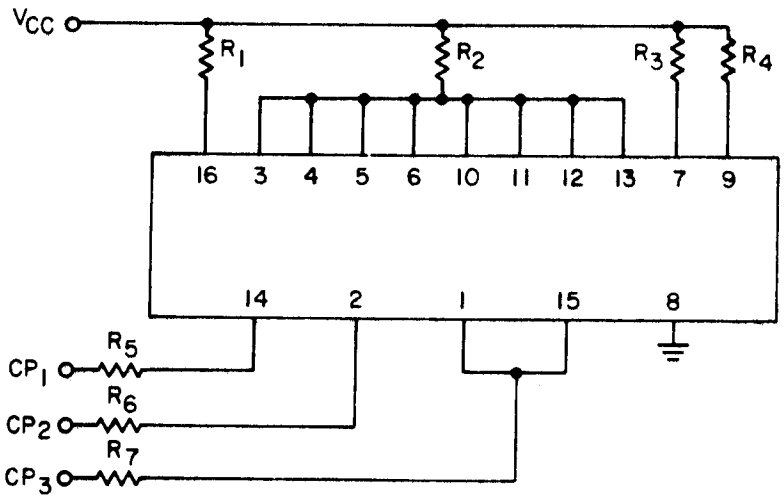

NOTES:

1. $R_2 = R_3 = R_4 = 220\Omega \pm 5\%$.
   $R_5 = R_6 = R_7 = 27\Omega \pm 5\%$.
2. CP_1 = 100 kHz ±50%; CP_2 = 50 kHz ±50%; CP_3 = 25 kHz ±50%; square waves; duty cycle = 50 ±15%; V_{IL} = -0.5 V minimum to 0.8 V maximum; V_{IH} = 2.0 V minimum to 5.5 V maximum.
3. V_{CC} and R_1 shall be chosen to insure a 5.0 V minimum is present at the device V_{CC} terminal.

FIGURE 3. Burn-in and life test circuits - Continued.

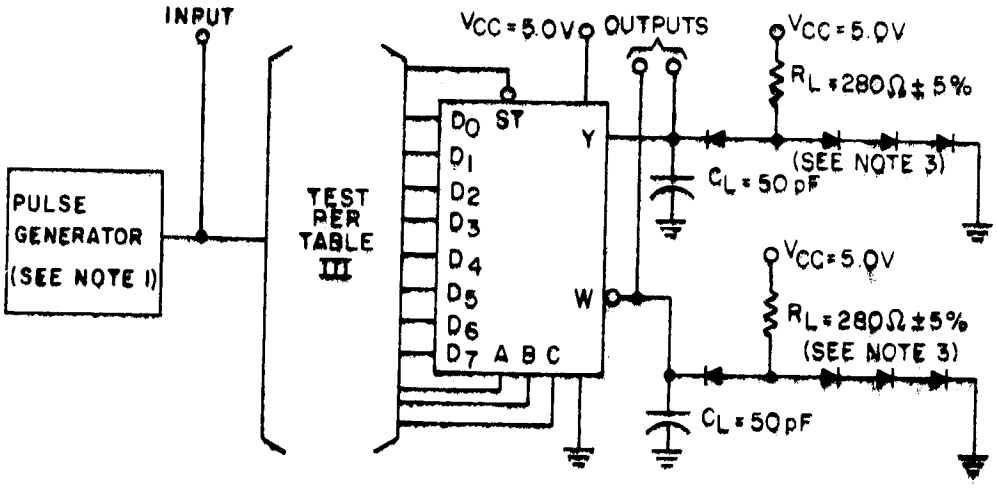

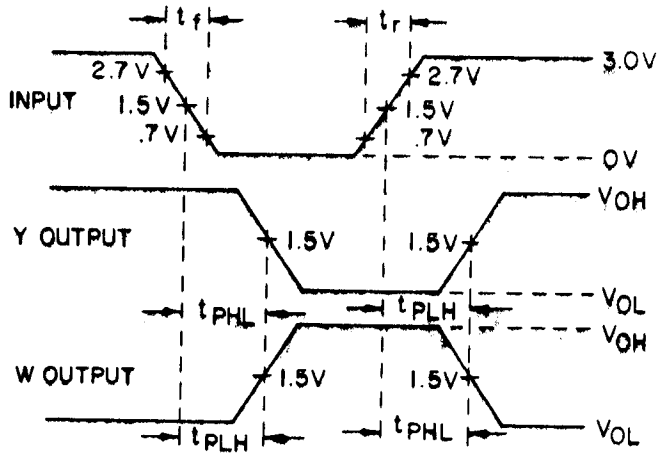

NOTES:

1. The input pulse has the following characteristics: $t_r = t_f \leq 2.5$ ns, PRR ≤ 1 MHz, and $Z_{OUT} = 50\Omega$.
2. C_L includes probe and jig capacitance.
3. All diodes are 1N3064 or equivalent.
4. Only the output under test needs to be loaded.

FIGURE 4. Switching time test circuits and waveforms for device type 01.

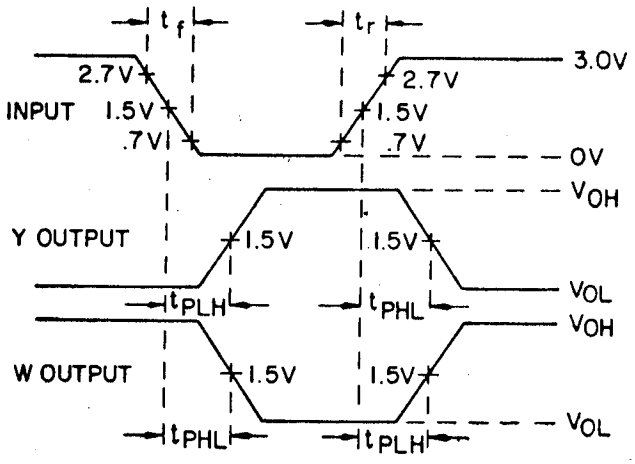

Strobe to output voltage waveforms - type 01.

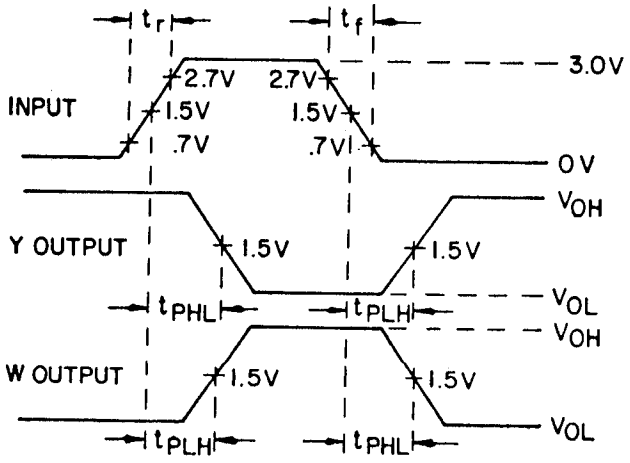

Data to output voltage waveforms - type 01.

FIGURE 4. Switching time test circuits and waveforms for device type 01 - Continued.

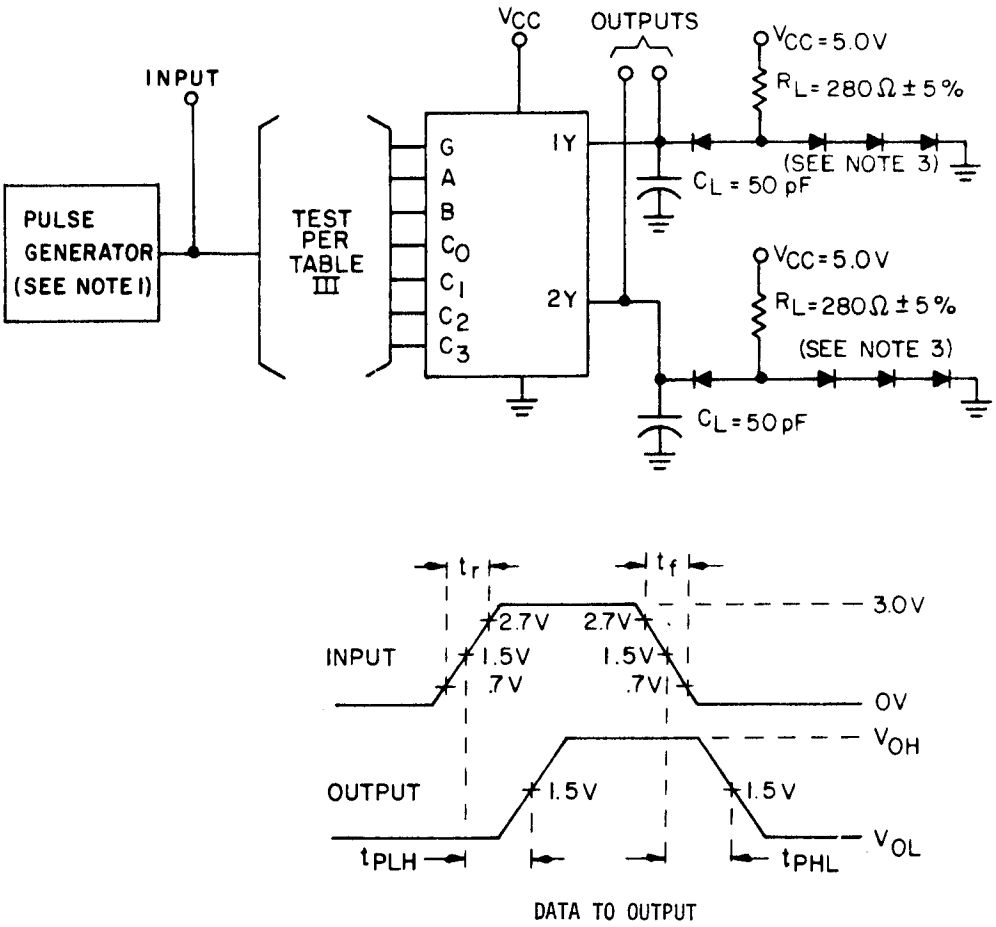

NOTES:
1. The input pulse has the following characteristics: $t_r = t_f \leq 2.5$ ns, PRR ≤ 1 MHz, and $Z_{OUT} \approx 50\Omega$.
2. C_L includes probe and jig capacitance.
3. All diodes are 1N3064 or equivalent.
4. Only the output under test needs to be loaded.

FIGURE 5. Switching time test circuits and waveforms for device type 02.

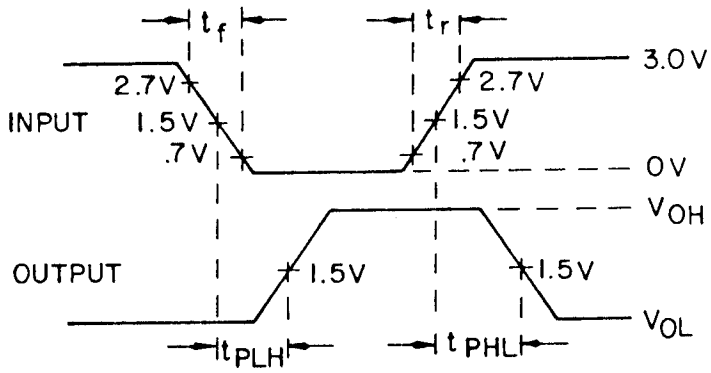

Select and strobe to output voltage waveforms - type 02.

FIGURE 5. Switching time test circuits and waveforms for device type 02 - Continued.

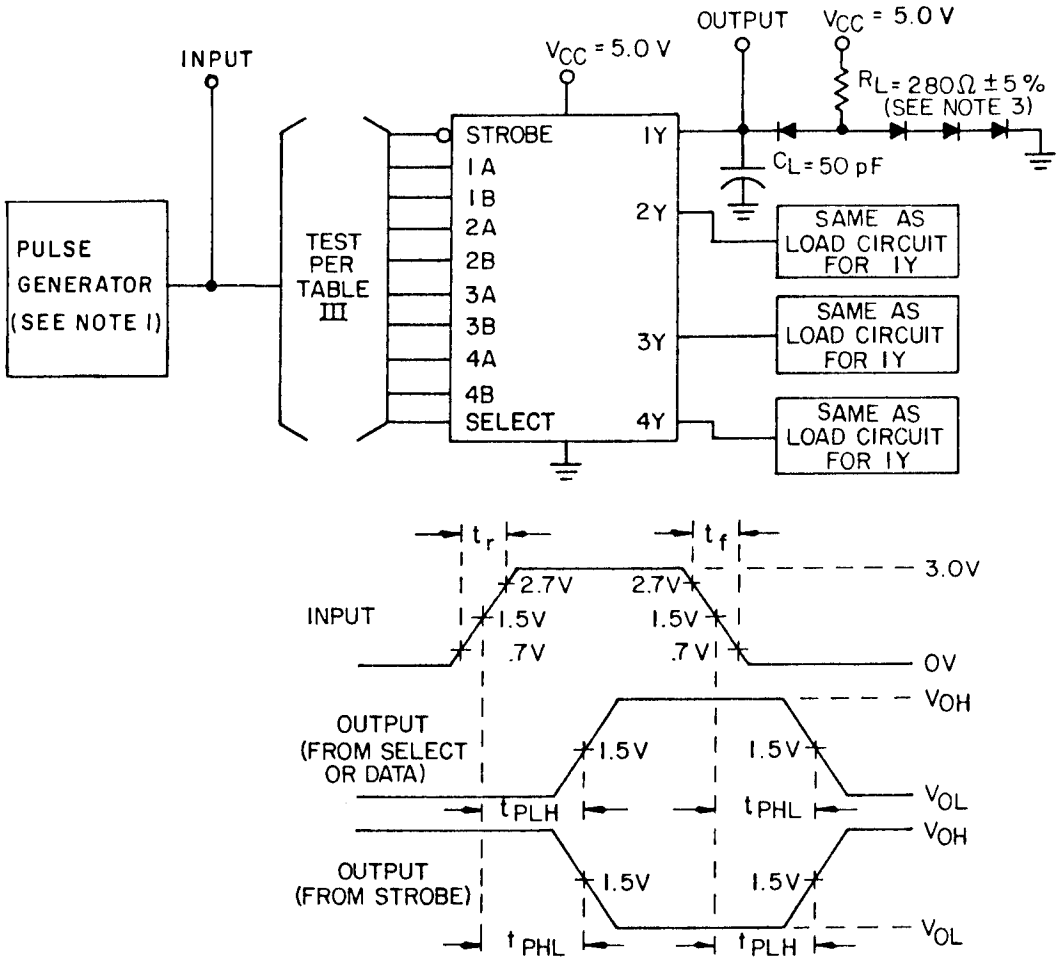

NOTES:

1. The input pulse has the following characteristics: PRR $\leq$ 1 MHz, $t_r = t_f \leq 2.5$ ns, $Z_{OUT} \approx 50\Omega$.
2. C_L includes probe and jig capacitance.
3. All diodes are 1N3064 or equivalent.
4. Load circuit is required on a given output only where table III indicates "OUT" on that output. Load circuits may otherwise be omitted.

FIGURE 6. Switching time test circuits and waveforms for device type 03.

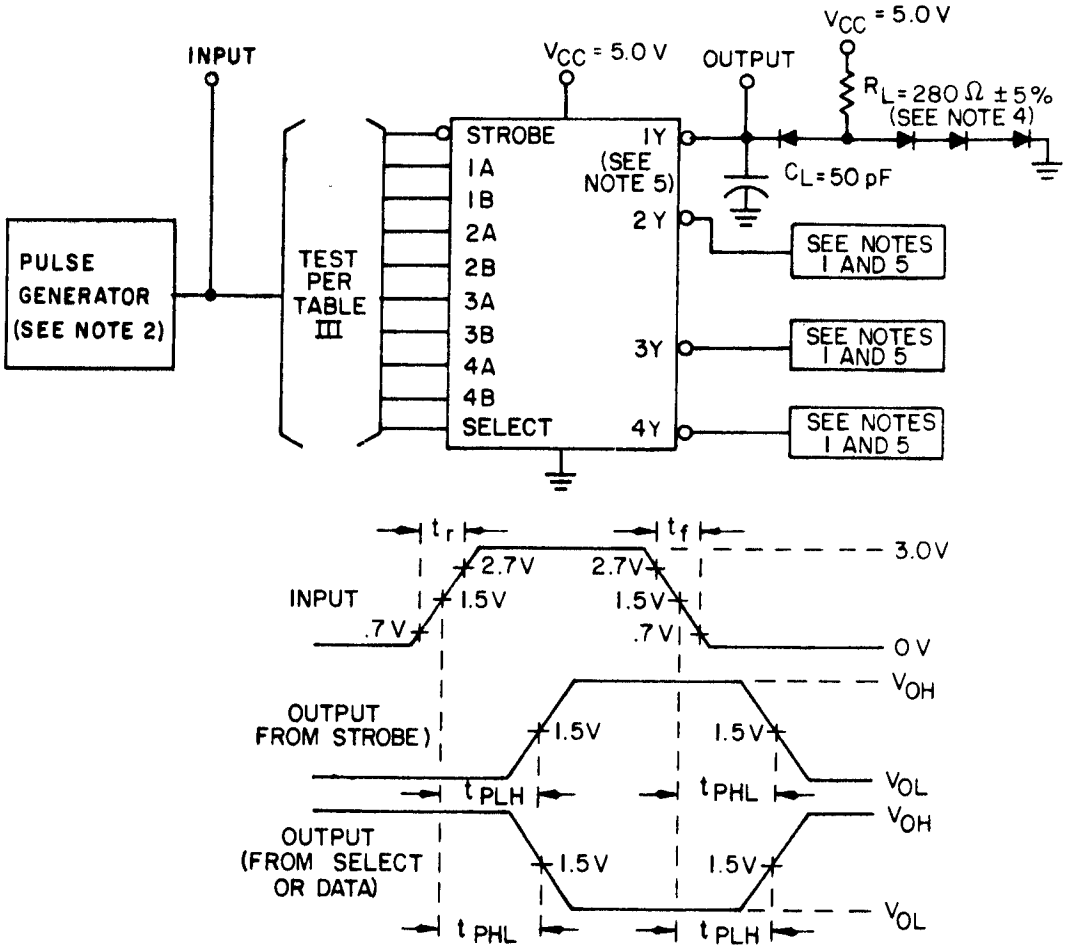

NOTES:
1. Connect same load as shown for output 1Y.
2. The input pulse has the following characteristics: PRR $\leq$1 MHz, $t_r = t_f \leq 2.5$ ns, $Z_{OUT} \approx 50\Omega$.
3. C_L includes probe and jig capacitance.
4. All diodes are 1N3064 or equivalent.
5. Load circuit is required on a given output only where table III indicates "OUT" on that output. Load circuits may otherwise be omitted.

FIGURE 7. Switching time test circuits and waveforms for device type 04.

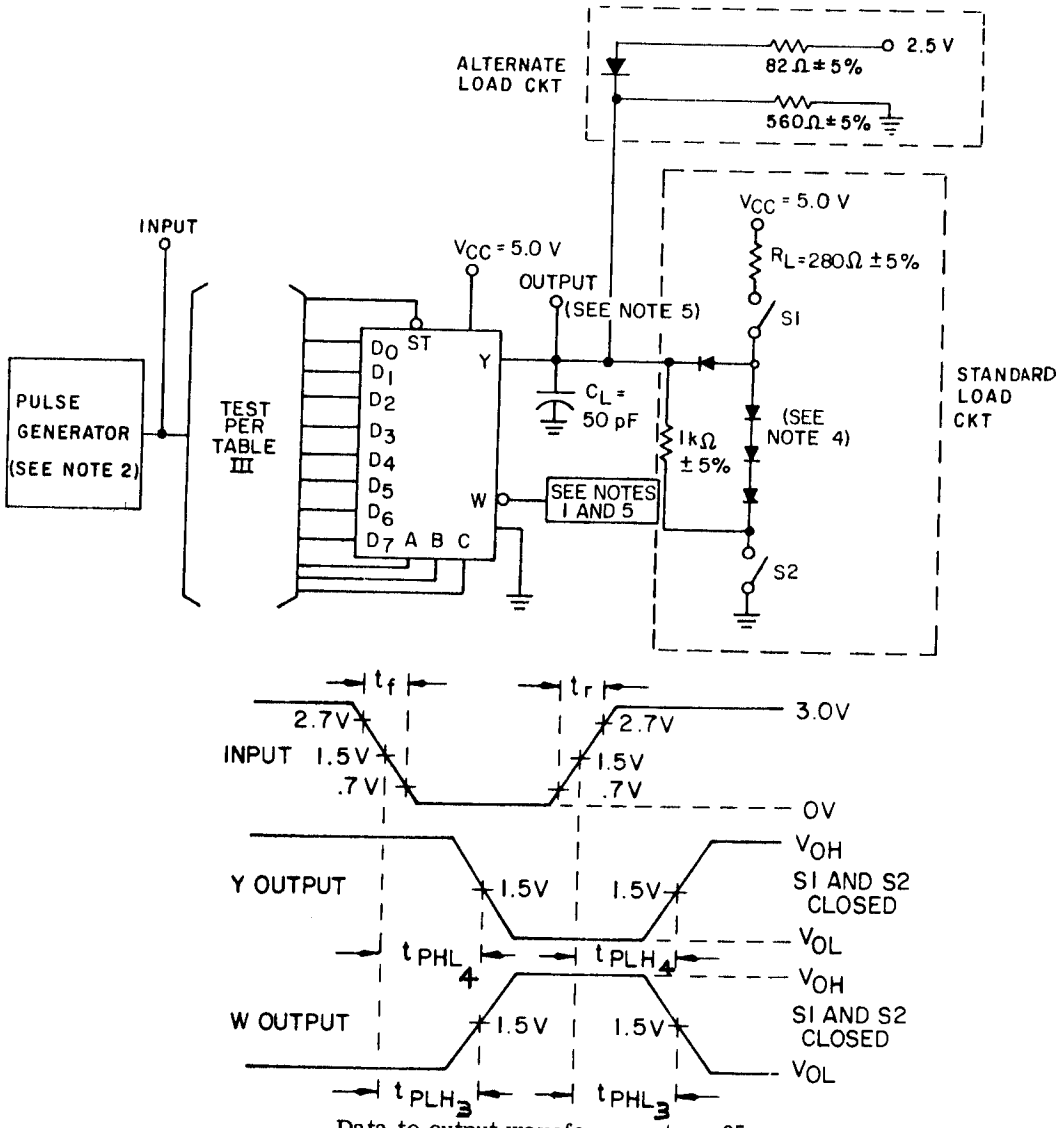

Data to output waveforms - type 05.

NOTES:

1. Connect same load as shown for Y output.
2. The input pulse has the following characteristics: $t_r = t_f \leq 2.5$ ns, PRR $\leq$ 1 MHz and $Z_{OUT} \approx 50\Omega$.
3. C_L includes probe and jig capacitance.
4. All diodes are 1N3064 or equivalent.
5. Load circuit is required on a given output only where table III indicates "OUT" on that output. Load circuits may otherwise be omitted.

   A. Output 1 is for an output with internal conditions such that the output is low except when disabled by the output control.
   B. Output 2 is for an output with internal conditions such that the output is high except when disabled by the output control.
6. Manufacturer may test with either the standard load circuit or the alternate load circuit at his option.

FIGURE 8. Switching time test circuits and waveforms for device type 05.

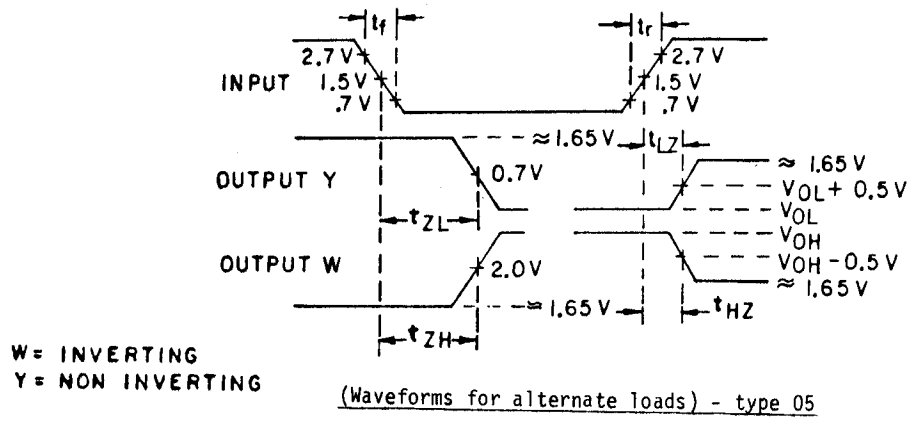

(Waveforms for alternate loads) - type 05

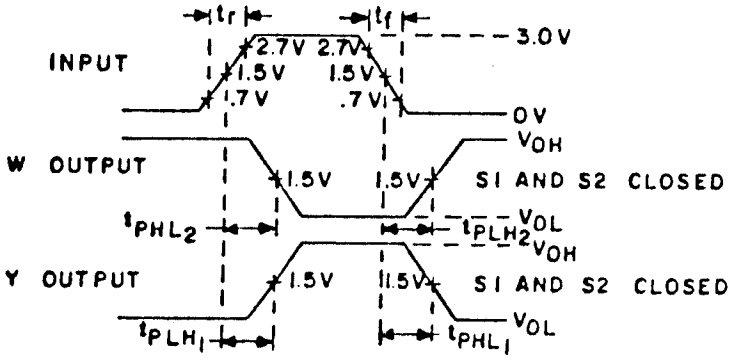

Select to output waveforms - type 05

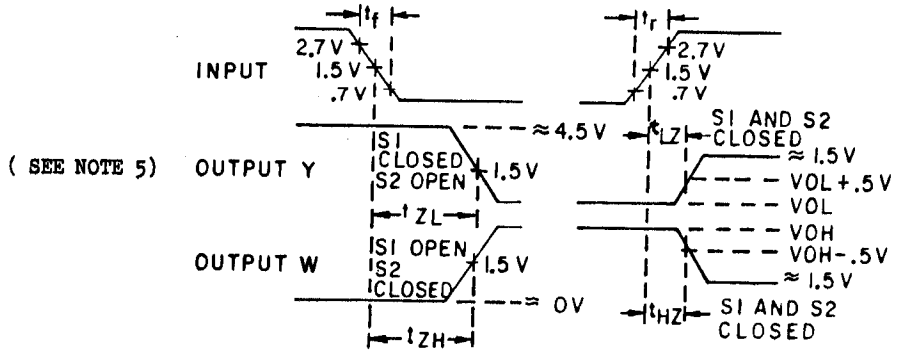

Strobe to output waveforms - type 05

FIGURE 8. Switching time test circuits and waveforms for device type 05 - Continued.

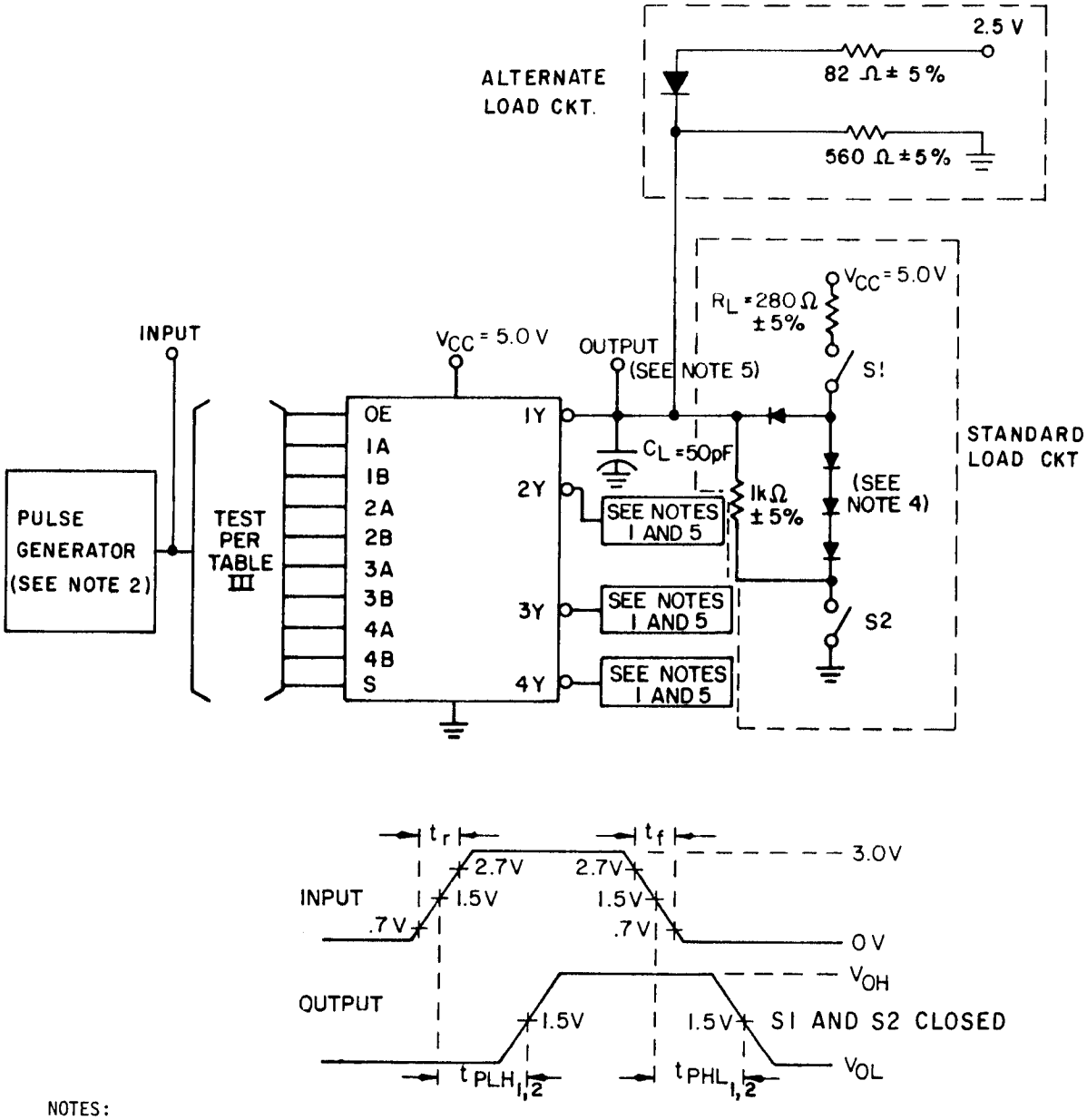

NOTES:

1. Connect same load as shown for 1Y output.
2. The input pulse has the following characteristics: $t_r = t_f \leq 2.5$ ns, PRR $\leq$ 1 MHz, and $Z_{OUT} \approx 50\Omega$.
3. C_L includes probe and jig capacitance.
4. All diodes are 1N3064 or equivalent.
5. Load circuit is required on a given output only where table III indicates "OUT" on that output. Load circuits may otherwise be omitted.

   A. Output 1 is for an output with internal conditions such that the output is low except when disabled by the output control.
   B. Output 2 is for an output with internal conditions such that the output is high except when disabled by the output control.

6. Manufacturer may test with either the standard load circuit or the alternate load circuit at his option.

FIGURE 9. Switching time test circuits and waveforms for device type 06.

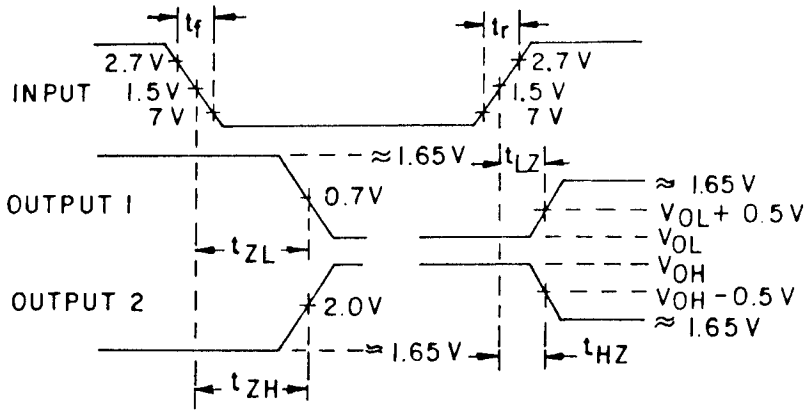

(Waveforms for alternate load)

(SEE NOTE 5)

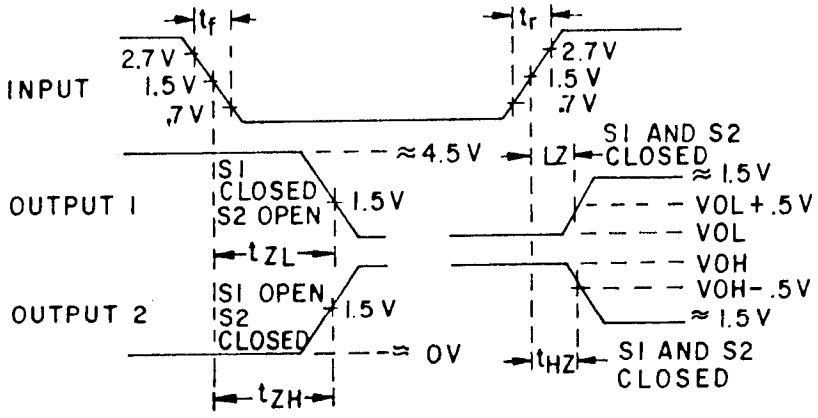

(Waveforms for standard load)

FIGURE 9. Switching time test circuits and waveforms for device type 06 - Continued.

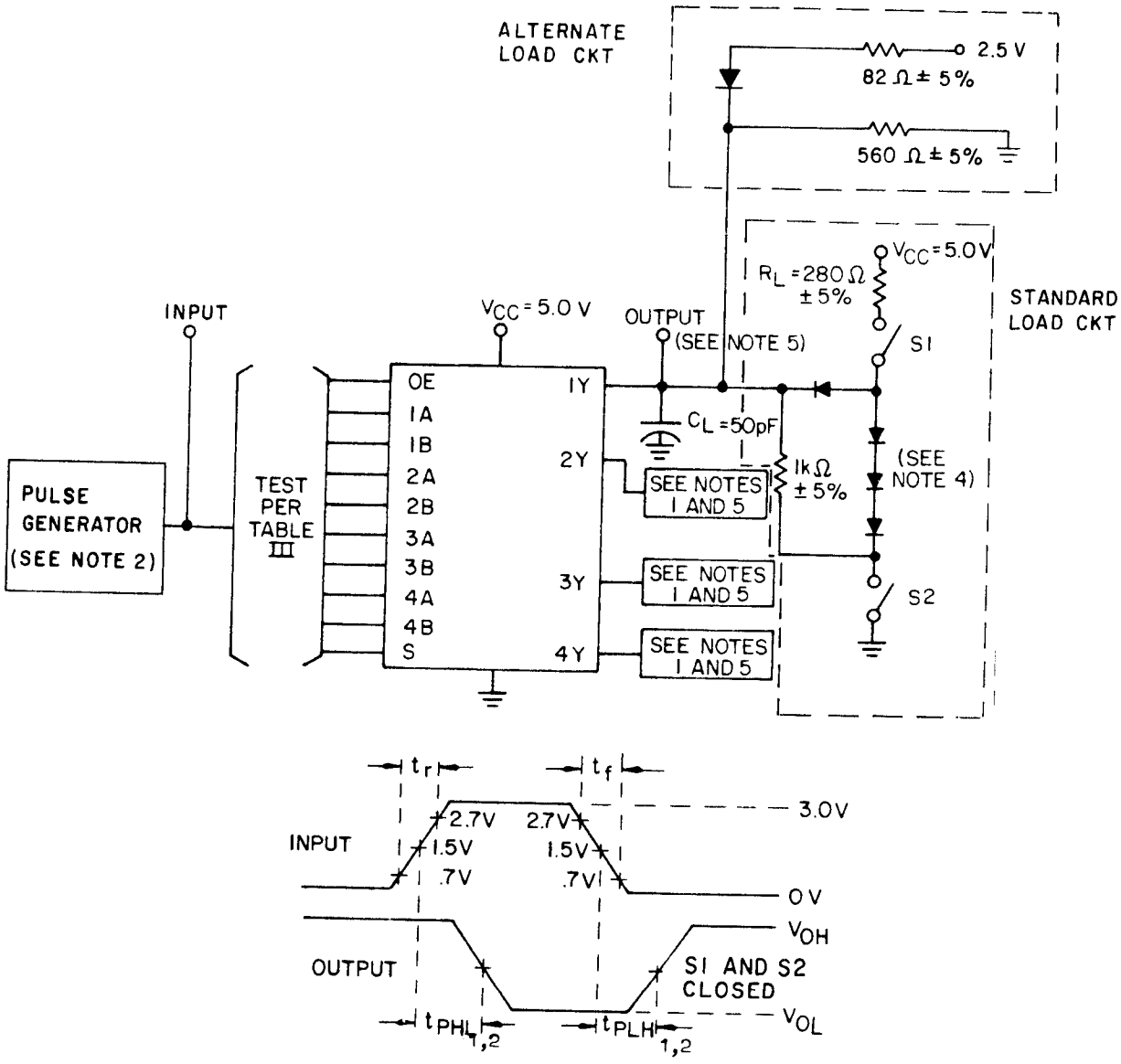

NOTES:
1. Connect same load as shown for 1Y output.
2. The input pulse has the following characteristics: $t_r = t_f \leq 2.5$ ns, PRR $\leq$ 1 MHz and Z_{OUT} 50Ω.
3. C_L includes probe and jig capacitance.
4. All diodes are 1N3064 or equivalent.
5. Load circuit is required on a given output only where table III indicates OUT on that output. Load circuits may otherwise be omitted.
   A. Output 1 is for an output with internal conditions such that the output is low except when disabled by the output control.
   B. Output 2 is for an output with internal conditions such that the output is high except when disabled by the output control.
6. Manufacturer may test with either the standard load circuit or the alternate load circuit at his option.

FIGURE 10. Switching time test circuits and waveforms for device type 07.

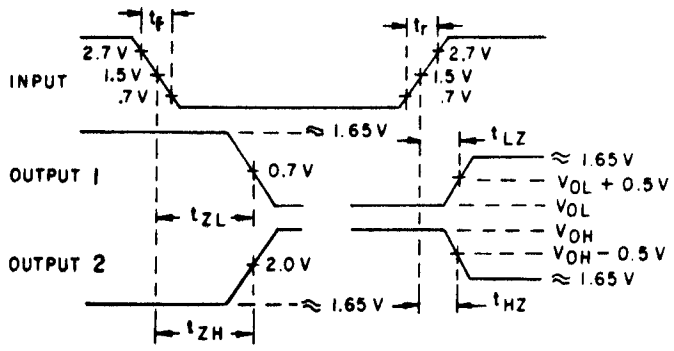

(Waveforms for alternate load)

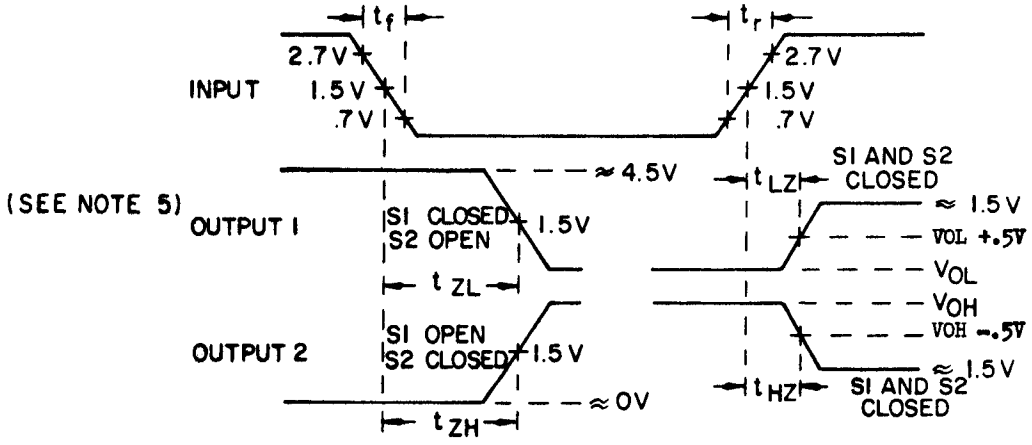

(Waveforms for standard load)

FIGURE 10. Switching time test circuits and waveforms for device type 07 - Continued.

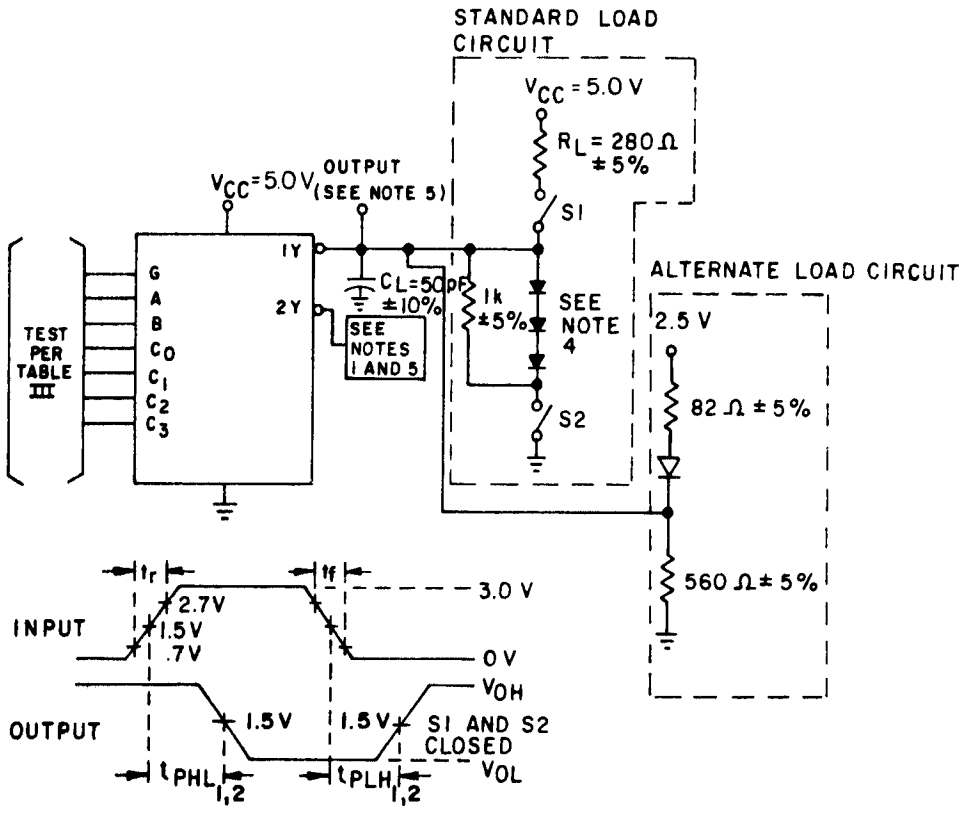

NOTES:

1. Connect same load as shown for 1Y output.
2. The input pulse has the following characteristics: $t_r = t_f \leq 2.5$ ns, PRR $\leq$ 1 MHz, and $Z_{OUT} \approx 50\Omega$.
3. C_L includes probe and jig capacitance.
4. All diodes are 1N3064 or equivalent.
5. Load circuit is required on a given output only where table III indicates "OUT" on that output. Load circuits may otherwise be omitted.
   A. Output 1 is for an output with internal conditions such that the output is low except when disabled by the output control.
   B. Output 2 is for an output with internal conditions such that the output is high except when disabled by the output control.
6. Manufacturer may test with either the standard load circuit or the alternate load circuit at his option.

FIGURE 11. Switching time test circuits and waveforms for device type 08.

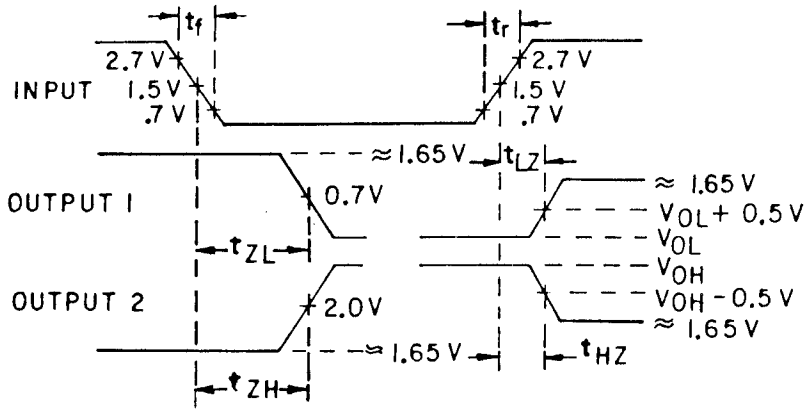

(Waveforms for alternate load)

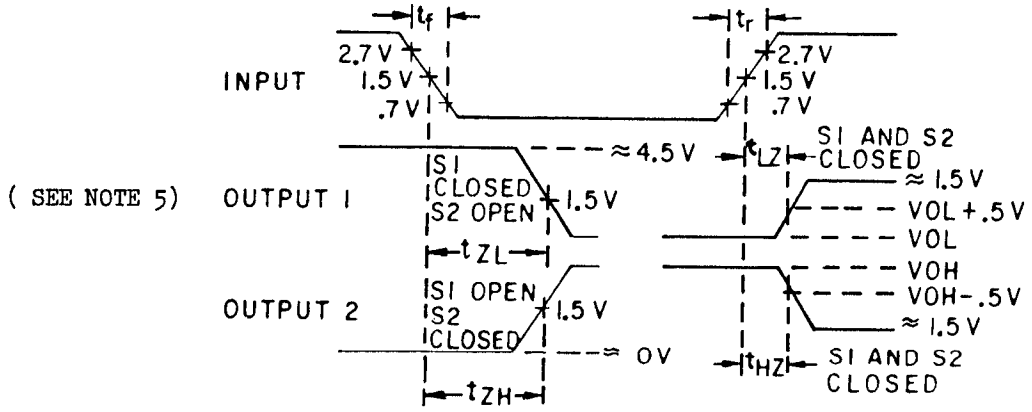

(Waveforms for standard load)

FIGURE 11. Switching time test circuits and waveforms for device type 08 - Continued.

TABLE III. Group A inspection for ...
Terminal conditions (pins not designated may be H ≥2.0 V, or L ≤0.8 V, ...

Subgroup	Symbol	MIL-STD-883 method	Cases E,F, X,2 5/	1	2	3	4	5	6	7	8	9	10	11	12	13	14	15	16	Measured terminal	Test limits Min	Max	Unit
				2	3	4	5	7	8	9	10	12	13	14	15	17	18	19	20				
			Test no.	D3	D2	D1	D0	Y	W	ST	GND	C	B	A	D7	D6	D5	D4	V_{CC}				
T_C = +25°C 1/	V_{OL}	3007	1				2.0 V		20 mA	0.8 V	GND	0.8 V	0.8 V	0.8 V					4.5 V	W		0.5	V
	V_{OL}	3007	2					20 mA		"	"	2.0 V	2.0 V	2.0 V	0.8 V				"	Y		0.5	"
	V_{OH}	3006	3						-1 mA	"	"	2.0 V	2.0 V	2.0 V	0.8 V				"	W	2.5		"
	V_{OH}	3006	4				2.0 V	-1 mA		"	"	0.8 V	0.8 V	0.8 V					"	Y	2.5		"
	I_{OS}	3011	5						GND	GND	"	5.5 V	5.5 V	5.5 V	GND				5.5 V	W	-40	-100 1/	mA
	I_{OS}	3011	6				5.5 V	GND		GND	"	GND	GND	GND					"	Y	-40	-100 1/	"
	I_{IH1}	3010	7	2.7 V						5.5 V	"	5.5 V	"	GND					"	D3		50	μA
	"		8		2.7 V					"	"	"	"	5.5 V					"	D2		"	"
	"		9			2.7 V				"	"	"	5.5 V	GND					"	D1		"	"
	"		10				2.7 V			"	"	"	5.5 V	5.5 V					"	D0		"	"
	"		11							2.7 V	"								"	ST		"	"
	"		12								"	2.7 V							"	C		"	"
	"		13								"		2.7 V						"	B		"	"
	"		14								"			2.7 V					"	A		"	"
	"		15							5.5 V	"	GND	GND	GND	2.7 V				"	D7		"	"
	"		16							"	"	"	GND	5.5 V		2.7 V			"	D6		"	"
	"		17							"	"	"	5.5 V	GND			2.7 V		"	D5		"	"
	"		18							"	"	"	5.5 V	5.5 V				2.7 V	"	D4		"	"
	I_{IH2}	"	19	5.5 V						"	"	5.5 V	GND	GND					"	D3		1.0	mA
	"		20		5.5 V					"	"	"	GND	5.5 V					"	D2		"	"
	"		21			5.5 V				"	"	"	5.5 V	GND					"	D1		"	"
	"		22				5.5 V			"	"	"	5.5 V	5.5 V					"	D0		"	"
	"		23							"	"								"	ST		"	"
	"		24								"	5.5 V							"	C		"	"
	"		25								"		5.5 V						"	B		"	"
	"		26								"			5.5 V					"	A		"	"
	"		27							5.5 V	"	GND	GND	GND	5.5 V				"	D7		"	"
	"		28							"	"	"	GND	5.5 V		5.5 V			"	D6		"	"
	"		29							"	"	"	5.5 V	GND			5.5 V		"	D5		"	"
	"		30							"	"	"	"	5.5 V				5.5 V	"	D4		"	"
	I_{IL1}	3009	31	0.5 V						GND	"	"	"	5.5 V					"	D3	-1	-2	"
	"		32		0.5 V					"	"	"	"	GND					"	D2	"	"	"
	"		33			0.5 V				"	"	"	GND	5.5 V					"	D1	"	"	"
	"		34				0.5 V			"	"	"	GND	GND					"	D0	"	"	"
	"		35							0.5 V	"								"	ST	"	"	"
	"		36								"	0.5 V							"	C	"	"	"
	"		37								"		0.5 V						"	B	"	"	"
	"		38								"			0.5 V					"	A	"	"	"
	"		39							GND	"	5.5 V	5.5 V	5.5 V	0.5 V				"	D7	"	"	"
	"		40							"	"	"	5.5 V	GND		0.5 V			"	D6	"	"	"
	"		41							"	"	"	GND	5.5 V			0.5 V		"	D5	"	"	"
	"		42							"	"	"	"	GND				0.5 V	"	D4	"	"	"
	I_{CC}	3005	43	GND	GND	GND	GND			"	"	GND	"	GND	GND	GND	GND	GND	"	V_{CC}		70	"
	I_{CEX}		44						5.5 V	"	"	5.5 V	5.5 V	5.5 V	GND				"	W		250	μA
	I_{CEX}		45				5.5 V	5.5 V		"	"	GND	GND	GND					"	Y		250	μA
	V_{IC}		46	-18 mA							"								4.5 V	D3		-1.2	V
			47		-18 mA						"								"	D2		"	"
			48			-18 mA					"								"	D1		"	"
			49				-18 mA				"								"	D0		"	"
			50							-18 mA	"								"	ST		"	"
			51								"	-18 mA							"	C		"	"
			52								"		-18 mA						"	B		"	"
			53								"			-18 mA					"	A		"	"
			54								"				-18 mA				"	D7		"	"
			55								"					-18 mA			"	D6		"	"
			56								"						-18 mA		"	D5		"	"
			57								"							-18 mA	"	D4		"	"

See footnotes at end of device type 01.

TABLE III. Group A inspection for device [illegible] - Continued.
Terminal conditions (pins not designated may be H ≥[illegible] V, or L ≤0.8 V, or open)

Subgroup	Symbol	MIL-STD-883 method	Cases E,F, X,2 5/	1	2	3	4	5	6	7	8	9	10	11	12	13	14	15	16	Measured terminal	Test limits Min	Test limits Max	Unit
				2	3	4	5	7	8	9	10	12	13	14	15	17	18	19	20				
			Test no.	D3	D2	D1	D0	Y	W	ST	GND	C	B	A	D7	D6	D5	D4	V_{CC}				
2	Same tests, terminal conditions, and limits as for subgroup 1, except T_C = +125°C and V_{IC} tests are omitted. V_{IL} = 0.7 V, $V_{OL(max)}$ = 0.45 V.																						
3	Same tests, terminal conditions, and limits as for subgroup 1, except T_C = -55°C and V_{IC} tests are omitted.																						
7	Truth	3014	58	A 2/	A 2/	A 2/	A 2/	L	H	A 2/	GND	A 2/	A 2/	A 2/	A 2/	A 2/	A 2/	A 2/	4.5 V	3/			
T_C = +25°C	table	"	59	A	A	A	B	L	H	B	"	B	B	B	A	A	A	A	"	"			
	test	"	60	B	B	B	A	H	L	"	"	"	"	B	B	B	B	B	"	"			
		"	61	A	A	B	A	L	H	"	"	"	"	A	A	A	A	A	"	"			
		"	62	B	B	A	B	H	L	"	"	"	"	A	B	B	B	B	"	"			
		"	63	A	B	A	A	L	H	"	"	"	A	B	A	A	A	A	"	"			
		"	64	B	A	B	B	H	L	"	"	"	"	B	B	B	B	B	"	"			
		"	65	B	A	A	A	L	H	"	"	"	"	A	A	A	A	A	"	"			
		"	66	A	B	B	B	H	L	"	"	"	"	A	B	B	B	B	"	"			
		"	67	A	A	A	A	L	H	"	"	A	B	B	A	A	A	A	"	"			
		"	68	B	B	B	B	H	L	"	"	"	"	B	B	B	B	A	"	"			
		"	69	A	A	A	A	L	H	"	"	"	"	A	A	A	B	A	"	"			
		"	70	B	B	B	B	H	L	"	"	"	"	A	B	B	A	B	"	"			
		"	71	A	A	A	A	L	H	"	"	"	A	B	A	B	A	A	"	"			
		"	72	B	B	B	B	H	L	"	"	"	"	B	B	A	B	B	"	"			
		"	73	A	A	A	A	L	H	"	"	"	"	A	B	A	A	A	"	"			
		"	74	B	B	B	B	H	L	"	"	"	"	A	A	B	B	B	"	"			
8	Repeat subgroup 7 at T_C = +125°C and -55°C.																						
9	t_{PHL1}	3003	75			2.7 V	GND		OUT	GND	GND	GND	GND	IN					5.0 V	W	2.0	15.5	ns
T_C = +25°C		Fig. 5	76				"		"	"	"	GND	IN	GND					"	"	"	"	"
		"	77				"		"	"	"	IN	GND	GND				2.7 V	"	"	"	"	"
	t_{PLH1}	"	78			2.7 V	"		"	"	"	GND	GND	IN					"	"	"	17.0	"
		"	79				"		"	"	"	GND	IN	GND					"	"	"	"	"
		"	80				"		"	"	"	IN	GND	GND				2.7 V	"	"	"	"	"
	t_{PHL2}	"	81			2.7 V	"	OUT		"	"	GND	GND	IN					"	Y	"	20	"
		"	82				"	"		"	"	GND	IN	GND					"	"	"	"	"
		"	83				"	"		"	"	IN	GND	GND				2.7 V	"	"	"	"	"
	t_{PLH2}	"	84			2.7 V	"	"		"	"	GND	GND	IN					"	"	"	"	"
		"	85				"	"		"	"	GND	IN	GND					"	"	"	"	"
		"	86				"	"		"	"	IN	GND	"				2.7 V	"	"	"	"	"
	t_{PHL3}	"	87				2.7 V		OUT	IN	"	GND	"	"					"	W	"	14.0	"
	t_{PLH3}	"	88				"		OUT	"	"	"	"	"					"	W	"	15.0	"
	t_{PHL4}	"	89				"	OUT		"	"	"	"	"					"	Y	"	20	"
	t_{PLH4}	"	90				"	OUT		"	"	"	"	"					"	Y	"	18.5	"
	t_{PHL5}	"	91				IN		OUT	GND	"	"	"	"					"	W	"	9.0	"
		"	92			IN			"	"	"	"	"	2.7 V					"	"	"	"	"
		"	93		IN				"	"	"	"	2.7 V	GND					"	"	"	"	"
		"	94	IN					"	"	"	"	2.7 V	2.7 V					"	"	"	"	"
		"	95						"	"	"	2.7 V	GND	GND				IN	"	"	"	"	"
		"	96						"	"	"	"	GND	2.7 V			IN		"	"	"	"	"
		"	97						"	"	"	"	2.7 V	GND					"	"	"	"	"
		"	98						"	"	"	"	2.7 V	2.7 V	IN				"	"	"	"	"

See footnotes at end of device type 01.

TABLE III. Group A inspection for device type 01 - Continued.
Terminal conditions (pins not designated may be H ≥2.0 V, or L ≤0.8 V, or open)

Subgroup	Symbol	MIL-STD-883 method	Cases E,F, X,2 5/ Test no.	1 / 2 / D3	2 / 3 / D2	3 / 4 / D1	4 / 5 / D0	5 / 7 / Y	6 / 8 / W	7 / 9 / ST	8 / 10 / GND	9 / 12 / C	10 / 13 / B	11 / 14 / A	12 / 15 / D7	13 / 17 / D6	14 / 18 / D5	15 / 19 / D4	16 / 20 / V_{CC}	Measured terminal	Test limits Min	Test limits Max	Unit
T_C = +25°C 9	t_{PLH5}	3003 Fig. 5	99	IN	IN	IN	IN		OUT	GND	GND	GND	GND	GND	IN	IN	IN	IN	5.0 V	W	2.0	9.0	ns
		"	100						"	"	"	"	GND	2.7 V					"	"	"	"	"
		"	101						"	"	"	"	2.7 V	GND					"	"	"	"	"
		"	102						"	"	"	"	2.7 V	2.7 V					"	"	"	"	"
		"	103						"	"	"	2.7 V	GND	2.7 V					"	"	"	"	"
		"	104						"	"	"	"	GND	GND					"	"	"	"	"
		"	105						"	"	"	"	2.7 V	2.7 V					"	"	"	"	"
		"	106						"	"	"	"	2.7 V	2.7 V					"	"	"	"	"
	t_{PHL6}	"	107	IN	IN	IN	IN	OUT		"	"	GND	GND	GND	IN	IN	IN	IN	"	Y	"	14.0	"
		"	108					"		"	"	"	GND	2.7 V					"	"	"	"	"
		"	109					"		"	"	"	2.7 V	GND					"	"	"	"	"
		"	110					"		"	"	"	2.7 V	2.7 V					"	"	"	"	"
		"	111					"		"	"	2.7 V	GND	GND					"	"	"	"	"
		"	112					"		"	"	"	GND	2.7 V					"	"	"	"	"
		"	113					"		"	"	"	2.7 V	GND					"	"	"	"	"
		"	114					"		"	"	"	2.7 V	2.7 V					"	"	"	"	"
	t_{PLH6}	"	115	IN	IN	IN	IN	"		"	"	GND	GND	GND	IN	IN	IN	IN	"	"	"	"	"
		"	116					"		"	"	"	GND	2.7 V					"	"	"	"	"
		"	117					"		"	"	"	2.7 V	GND					"	"	"	"	"
		"	118					"		"	"	"	2.7 V	2.7 V					"	"	"	"	"
		"	119					"		"	"	2.7 V	GND	GND					"	"	"	"	"
		"	120					"		"	"	"	GND	2.7 V					"	"	"	"	"
		"	121					"		"	"	"	2.7 V	GND					"	"	"	"	"
		"	122					"		"	"	"	2.7 V	2.7 V					"	"	"	"	"
T_C = +125°C 10	t_{PHL1}	"	123		2.7 V	2.7 V	GND		OUT	"	"	GND	GND	IN					"	W	"	20	"
		"	124				"		"	"	"	GND	IN	GND					"	"	"	"	"
		"	125				"		"	"	"	IN	GND	GND				2.7 V	"	"	"	"	"
	t_{PLH1}	"	126		2.7 V	2.7 V	"		"	"	"	GND	GND	IN					"	"	"	22	"
		"	127				"		"	"	"	GND	IN	GND					"	"	"	"	"
		"	128				"		"	"	"	IN	GND	GND				2.7 V	"	"	"	"	"
	t_{PHL2}	"	129		2.7 V	2.7 V	"	OUT		"	"	GND	GND	IN					"	Y	"	26	"
		"	130				"	"		"	"	GND	IN	GND					"	"	"	"	"
		"	131				"	"		"	"	IN	GND	GND				2.7 V	"	"	"	"	"
	t_{PLH2}	"	132		2.7 V	2.7 V	"	"		"	"	GND	GND	IN					"	"	"	"	"
		"	133				"	"		"	"	GND	IN	GND					"	"	"	"	"
		"	134				"	"		"	"	IN	GND	GND				2.7 V	"	"	"	"	"
	t_{PHL3}	"	135				2.7 V		OUT	IN	"	GND	"	"					"	W	"	18	"
	t_{PLH3}	"	136				"		OUT	"	"	"	"	"					"	W	"	19.5	"
	t_{PHL4}	"	137				"	OUT		"	"	"	"	"					"	Y	"	26	"
	t_{PLH4}	"	138				"	OUT		"	"	"	"	"					"	Y	"	24	"

See footnotes at end of device type 01.

TABLE III. Group A inspection for device 01 - Continued.

Terminal conditions (pins not designated may be H ≥2.0 V, or L ≤0.8 V, or open)

Subgroup	Symbol	MIL-STD-883 method	Cases E,F, X,2 5/	1	2	3	4	5	6	7	8	9	10	11	12	13	14	15	16	Measured terminal	Test limits Min	Test limits Max	Unit
				2	3	4	5	7	8	9	10	12	13	14	15	17	18	19	20				
			Test no.	D3	D2	D1	D0	Y	W	ST	GND	C	B	A	D7	D6	D5	D4	V_{CC}				
10 T_C = +125°C	t_{PHL5}	3003 Fig. 5	139	IN	IN	IN	IN		OUT	GND	GND	GND	GND	GND	IN	IN	IN	IN	5.0 V	W	2.0	11.5	ns
		"	140						"	"	"	"	GND	2.7 V					"	"	"	"	"
		"	141						"	"	"	"	2.7 V	GND					"	"	"	"	"
		"	142						"	"	"	"	2.7 V	2.7 V					"	"	"	"	"
		"	143						"	"	"	2.7 V	GND	GND					"	"	"	"	"
		"	144						"	"	"	"	GND	2.7 V					"	"	"	"	"
		"	145						"	"	"	"	2.7 V	GND					"	"	"	"	"
		"	146						"	"	"	"	2.7 V	2.7 V					"	"	"	"	"
	t_{PLH5}	"	147	IN	IN	IN	IN		"	"	"	GND	GND	GND	IN	IN	IN	IN	"	"	"	"	"
		"	148						"	"	"	"	GND	2.7 V					"	"	"	"	"
		"	149						"	"	"	"	2.7 V	GND					"	"	"	"	"
		"	150						"	"	"	"	2.7 V	2.7 V					"	"	"	"	"
		"	151						"	"	"	2.7 V	GND	GND					"	"	"	"	"
		"	152						"	"	"	"	GND	2.7 V					"	"	"	"	"
		"	153						"	"	"	"	2.7 V	GND					"	"	"	"	"
		"	154						"	"	"	"	2.7 V	2.7 V					"	"	"	"	"
	t_{PHL6}	"	155	IN	IN	IN	IN	OUT		"	"	GND	GND	GND	IN	IN	IN	IN	"	Y	"	18	"
		"	156					"		"	"	"	GND	2.7 V					"	"	"	"	"
		"	157					"		"	"	"	2.7 V	GND					"	"	"	"	"
		"	158					"		"	"	"	2.7 V	2.7 V					"	"	"	"	"
		"	159					"		"	"	2.7 V	GND	GND					"	"	"	"	"
		"	160					"		"	"	"	GND	2.7 V					"	"	"	"	"
		"	161					"		"	"	"	2.7 V	GND					"	"	"	"	"
		"	162					"		"	"	"	2.7 V	2.7 V					"	"	"	"	"
	t_{PLH6}	"	163	IN	IN	IN	IN	"		"	"	GND	GND	GND	IN	IN	IN	IN	"	"	"	"	"
		"	164					"		"	"	"	GND	2.7 V					"	"	"	"	"
		"	165					"		"	"	"	2.7 V	GND					"	"	"	"	"
		"	166					"		"	"	"	2.7 V	2.7 V					"	"	"	"	"
		"	167					"		"	"	2.7 V	GND	GND					"	"	"	"	"
		"	168					"		"	"	"	GND	2.7 V					"	"	"	"	"
		"	169					"		"	"	"	2.7 V	GND					"	"	"	"	"
		"	170					"		"	"	"	2.7 V	2.7 V					"	"	"	"	"
11	Same tests, terminal conditions, and limits as for subgroup 10, except T_C = -55°C.																						

1/ For circuit B, $I_{OS(max)}$ = -110 mA.

2/ A = 2.4 V; B = 0.4 V.

3/ H ≥ 1.5 V; L ≤ 1.5 V.

4/ Only a summary of attributes is required.

5/ Case 2 pins not designated are NC.

TABLE III. Group A inspection for device type 02.
Terminal conditions (pins not designated may be H ≥2.0 V, or L ≤0.8 V, or open)

Subgroup	Symbol	MIL-STD-883 method	Cases E,F, X,2 5/	1	2	3	4	5	6	7	8	9	10	11	12	13	14	15	16	Measured terminal	Test limits Min	Test limits Max	Unit
				2	3	4	5	7	8	9	10	12	13	14	15	17	18	19	20				
			Test no.	1G	3	1C3	1C2	1C1	1C0	1Y	GND	2Y	2C0	2C1	2C2	2C3	A	2G	VCC				
T_C = +25°C [1]	V_{OH}	3006	1	0.8 V	0.8 V				2.0 V	-1 mA	GND						0.8 V		4.5 V	1Y	2.5		V
	V_{OH}	3006	2		0.8 V						"	-1 mA	2.0 V				0.8 V	0.8 V	"	2Y	2.5		"
	V_{OL}	3007	3	2.0 V						20 mA	"								"	1Y		0.5	"
	V_{OL}	3007	4								"	20 mA						2.0 V	"	2Y		0.5	"
	V_{IC}		5								"								"	A		-1.2	"
			6		-18 mA						"						-18 mA		"	B		"	"
			7						-18 mA		"								"	1C0		"	"
			8								"								"	1C1		"	"
			9					-18 mA			"								"	1C2		"	"
			10				-18 mA				"								"	1C3		"	"
			11	-18 mA		-18 mA					"								"	1G		"	"
			12								"								"	2C0		"	"
			13								"		-18 mA						"	2C1		"	"
			14								"			-18 mA					"	2C2		"	"
			15								"				-18 mA				"	2C3		"	"
			16								"					-18 mA			"	2G		"	"
	I_{IL}	3009	17								"						0.5 V		5.5 V	A	-1.0	-2.0	mA
		"	18		0.5 V						"								"	B	"	"	"
		"	19	0.5 V							"								"	1G	"	"	"
		"	20								"							0.5 V	"	2G	"	"	"
		"	21	GND	GND				0.5 V		"						GND		"	1C0	"	"	"
		"	22	"	GND			0.5 V			"						5.5 V		"	1C1	"	"	"
		"	23	"	5.5 V		0.5 V				"						GND		"	1C2	"	"	"
		"	24	"	5.5 V	0.5 V					"						5.5 V		"	1C3	"	"	"
		"	25		GND						"		0.5 V				GND	GND	"	2C0	"	"	"
		"	26		GND						"			0.5 V			5.5 V	"	"	2C1	"	"	"
		"	27		5.5 V						"				0.5 V		GND	"	"	2C2	"	"	"
		"	28		5.5 V						"					0.5 V	5.5 V	"	"	2C3	"	"	"
	I_{IH1}	3010	29								"						2.7 V		"	A		50	µA
		"	30		2.7 V						"								"	B		"	"
		"	31	2.7 V							"								"	1G		"	"
		"	32								"							2.7 V	"	2G		"	"
		"	33	5.5 V	5.5 V				2.7 V		"						5.5 V		"	1C0		"	"
		"	34	"	5.5 V			2.7 V			"						GND		"	1C1		"	"
		"	35	"	GND		2.7 V				"						5.5 V		"	1C2		"	"
		"	36	"	GND	2.7 V					"						GND		"	1C3		"	"
		"	37		5.5 V						"		2.7 V				5.5 V	5.5 V	"	2C0		"	"
		"	38		5.5 V						"			2.7 V			GND	"	"	2C1		"	"
		"	39		GND						"				2.7 V		5.5 V	"	"	2C2		"	"
		"	40		GND						"					2.7 V	GND	"	"	2C3	"	"	"
	I_{IH2}	"	41								"						5.5 V		"	A		1.0	mA
		"	42		5.5 V						"								"	B		"	"
		"	43	5.5 V							"								"	1G		"	"
		"	44								"							5.5 V	"	2G		"	"
		"	45	5.5 V	5.5 V				5.5 V		"						5.5 V		"	1C0		"	"
		"	46	"	5.5 V			5.5 V			"						GND		"	1C1		"	"
		"	47	"	GND		5.5 V				"						5.5 V		"	1C2		"	"
		"	48	"	GND	5.5 V					"						GND		"	1C3		"	"
		"	49		5.5 V						"		5.5 V				5.5 V	5.5 V	"	2C0		"	"

See footnotes at end of device type 02.

TABLE III. Group A inspection for device type 02 - Continued.
Terminal conditions (pins not designated may be H ≥2.0 V, or L ≤0.8 V, or open)

Subgroup	Symbol	MIL-STD-883 method	Cases E,F, X,2 5/ Test No.	1 2 1G	2 3 B	3 4 1C3	4 5 1C2	5 7 1C1	6 8 1C0	7 9 1Y	8 10 GND	9 12 2Y	10 13 2C0	11 14 2C1	12 15 2C2	13 17 2C3	14 18 A	15 19 2G	16 20 V_{CC}	Measured terminal	Test limits Min	Test limits Max	Unit
1 T_C = +25°C	I_{IH2}	3010	50		5.5 V						GND			5.5 V			GND	5.5 V	5.5 V	2C1		1.0	mA
		"	51		GND						"				5.5 V		5.5 V	"	"	2C2		"	"
		"	52		"						"					5.5 V	GND	"	"	2C3		"	"
	I_{OS}	3011	53	GND	"				5.5 V	GND	"						"		"	1Y	-40	-100 1/	"
		"	54	"	"						"	GND	5.5 V				"	GND	"	2Y	-40	-100 1/	"
	I_{CC}	3005	55	"	"	GND	GND	GND	GND		"		GND	GND	GND	GND	"	GND	"	V_{CC}		70	"
	I_{CEX}		56	GND	"				5.5 V	5.5 V	"						"		"	1Y		250	µA
			57		"						"	5.5 V	5.5 V				"	GND	"	2Y		250	µA
2	Same tests, terminal conditions, and limits as for subgroup 1, except T_C = +125°C and V_{IC} tests are omitted. V_{IL} = 0.7 V, V_{OL} = 0.45 V.																						
3	Same tests, terminal conditions, and limits as for subgroup 1, except T_C = -55°C and V_{IC} tests are omitted.																						
7 2/ T_C = +25°C	Truth table test	3014	58	A 3/	B 3/	A 3/	A 3/	A 3/	A 3/	L	GND	L	A 2/	A 2/	A 2/	A 2/	B 2/	A 2/	4.5 V	See 4/			
		"	59	B	"	A	A	A	B	L	"	L	B	A	A	A	"	B	"	"			
		"	60	"	"	B	B	B	A	H	"	H	A	B	B	B	"	"	"	"			
		"	61	"	"	A	A	B	A	L	"	L	A	B	A	A	A	"	"	"			
		"	62	"	"	B	B	A	B	H	"	H	B	A	B	A	A	"	"	"			
		"	63	"	A	A	B	A	A	L	"	L	A	A	B	A	B	"	"	"			
		"	64	"	"	B	A	B	B	H	"	H	B	B	A	B	B	"	"	"			
		"	65	"	"	B	A	A	A	L	"	L	A	A	A	B	A	"	"	"			
		"	66	"	"	A	B	B	B	H	"	H	B	B	B	A	A	"	"	"			
8	Same tests, terminal conditions, and limits as for subgroup 7, except T_C = +125°C and T_C = -55°C.																						
9 T_C = +25°C	t_{PHL1}	3003 Fig. 5	67	GND	GND				IN	OUT	GND						GND		5.0 V	1Y	2.0	11.0	ns
		"	68	"	GND			IN		"	"						2.7 V		"	"	"	"	"
		"	69	"	2.7 V		IN			"	"						GND		"	"	"	"	"
		"	70	"	2.7 V	IN				"	"						2.7 V		"	"	"	"	"
		"	71		GND						"	OUT	IN				GND	GND	"	2Y	"	"	"
		"	72		GND						"	"		IN			2.7 V	"	"	"	"	"	"
		"	73		2.7 V						"	"			IN		GND	"	"	"	"	"	"
		"	74		2.7 V						"	"				IN	2.7 V	"	"	"	"	"	"
	t_{PLH1}	"	75	GND	GND				IN	OUT	"						GND		"	1Y	"	"	"
		"	76	"	GND			IN		"	"						2.7 V		"	"	"	"	"
		"	77	"	2.7 V		IN			"	"						GND		"	"	"	"	"
		"	78	"	2.7 V	IN				"	"						2.7 V		"	"	"	"	"
		"	79		GND						"	OUT	IN				GND	GND	"	2Y	"	"	"
		"	80		GND						"	"		IN			2.7 V	"	"	"	"	"	"
		"	81		2.7 V						"	"			IN		GND	"	"	"	"	"	"
		"	82		2.7 V						"	"				IN	2.7 V	"	"	"	"	"	"
	t_{PHL2}	"	83	GND	GND			GND	2.7 V	OUT	"						IN		"	1Y	"	20	"
		"	84	GND	IN		GND		2.7 V	OUT	"						GND		"	1Y	"	"	"
		"	85		GND						"	OUT	2.7 V	GND			IN	GND	"	2Y	"	"	"
		"	86		IN						"	OUT	2.7 V		GND		GND	GND	"	2Y	"	"	"

See footnotes at end of device type 02.

TABLE III. Group A inspection for device type 02 - Continued.
Terminal conditions (pins not designated may be H ≥2.0 V, or L ≤0.8 V, or open)

Subgroup	Symbol	MIL-STD-883 method	Cases E,F, TX,2 5/	1	2	3	4	5	6	7	8	9	10	11	12	13	14	15	16	Measured terminal	Test limits Min	Test limits Max	Unit
				2	3	4	5	7	8	9	10	12	13	14	15	17	18	19	20				
			Test no.	1G	B	1C3	1C2	1C1	1C0	1Y	GND	2Y	2C0	2C1	2C2	2C3	A	2G	V_{CC}				
9 T_C = +25°C	t_{PLH2}	3003 Fig. 6	87	GND	GND		GND	GND	2.7 V	OUT	GND						IN		5.0 V	1Y	2.0	20	ns
		"	88	GND	IN				2.7 V	OUT	"						GND		"	1Y	"	"	"
		"	89		GND						"	OUT	2.7 V	GND			IN	GND	"	2Y	"	"	"
			90		IN						"	OUT	2.7 V		GND		GND	GND	"	2Y	"	"	"
	t_{PHL3}	"	91	IN	GND				2.7 V	OUT	"						"		"	1Y	"	15.5	"
		"	92		"						"	OUT	2.7 V				"	IN	"	2Y	"	15.5	"
	t_{PLH3}	"	93	IN	"				2.7 V	OUT	"						"		"	1Y	"	17.0	"
		"	94		"						"	OUT	2.7 V				"	IN	"	2Y	"	17.0	"
10 T_C = +125°C	t_{PHL1}	"	95	GND	"				IN	OUT	"						"		"	1Y	"	14.5	"
		"	96	"	"					"	"						2.7 V		"	"	"	"	"
		"	97	"	2.7 V					"	"						GND		"	"	"	"	"
		"	98	"	2.7 V	IN	IN	IN		"	"						2.7 V		"	"	"	"	"
		"	99		GND						"						GND	GND	"	2Y	"	"	"
		"	100		GND						"	OUT	IN	IN	IN		2.7 V	"	"	"	"	"	"
		"	101		2.7 V						"	"					GND	"	"	"	"	"	"
		"	102		2.7 V						"	"					2.7 V	"	"	"	"	"	"
	t_{PLH1}	"	103	GND	GND				IN	OUT	"						GND		"	1Y	"	14.5	"
		"	104	"	"					"	"						2.7 V		"	"	"	"	"
		"	105	"	2.7 V	IN	IN	IN		"	"						GND		"	"	"	"	"
		"	106	"	2.7 V					"	"						2.7 V		"	"	"	"	"
		"	107		GND						"	OUT	IN	IN	IN		GND	GND	"	2Y	"	"	"
		"	108		GND						"	"					2.7 V	"	"	"	"	"	"
		"	109		2.7 V						"	"					GND	"	"	"	"	"	"
		"	110		2.7 V						"	"				IN	2.7 V	"	"	"	"	"	"
	t_{PHL2}	"	111	GND	GND		GND	GND	2.7 V	OUT	"						IN		"	1Y	"	26	"
		"	112	GND	IN				2.7 V	OUT	"						GND		"	1Y	"	"	"
		"	113		GND						"	OUT	2.7 V	GND			IN	GND	"	2Y	"	"	"
		"	114		IN						"	OUT	2.7 V		GND		GND	GND	"	2Y	"	"	"
	t_{PLH2}	"	115	GND	GND		GND	GND	2.7 V	OUT	"						IN		"	1Y	"	26	"
		"	116	GND	IN				2.7 V	OUT	"						GND		"	1Y	"	"	"
		"	117		GND						"	OUT	2.7 V	GND			IN	GND	"	2Y	"	"	"
		"	118		IN						"	OUT	2.7 V		GND		GND	GND	"	2Y	"	"	"
	t_{PHL3}	"	119	IN	GND				2.7 V	OUT	"						"		"	1Y	"	21	"
		"	120		"						"	OUT	2.7 V				"	IN	"	2Y	"	21	"
	t_{PLH3}	"	121	IN	"				2.7 V	OUT	"						"		"	1Y	"	22	"
		"	122		"						"	OUT	2.7 V				"	IN	"	2Y	"	22	"
11	Same tests, terminal conditions, and limits as for subgroup 10, except T_C = -55°C.																						

1/ For circuit B, I_{OS}(max) = -110 mA.

2/ Only a summary of attributes is required.

3/ A = 2.4 V; B = 0.4 V.

4/ H ≥ 1.5 V; L ≤ 1.5 V.

5/ Case 2 pins not designated are NC.

TABLE III. Group A inspection for ype 03.
Terminal conditions (pins not designated ma ..0 V, or L ≤0.8 V, or open)

Subgroup	Symbol	MIL-STD-883 method	Cases E,F, X,2 5/	1	2	3	4	5	6	7	8	9	10	11	12	13	14	15	16	Measured terminal	Test limits Min	Test limits Max	Unit
				2	3	4	5	7	8	9	10	12	13	14	15	17	18	19	20				
			Test no.	S	1A	1B	1Y	2A	2B	2Y	GND	3Y	3B	3A	4Y	4B	4A	G	V_{CC}				
1 T_C = +25°C	V_{OH}	3006	1	2.0 V		2.0 V	-1 mA				GND							0.8 V	4.5 V	1Y	2.5		V
		"	2	"					2.0 V	-1 mA	"							"	"	2Y	"		"
		"	3	"							"	-1 mA	2.0 V					"	"	3Y	"		"
		"	4	"							"				-1 mA	2.0 V		"	"	4Y	"		"
	V_{OL}	3007	5				20 mA				"							2.0 V	"	1Y		0.5	"
		"	6							20 mA	"							"	"	2Y		"	"
		"	7								"	20 mA						"	"	3Y		"	"
		"	8								"				20 mA			"	"	4Y		"	"
	V_{IC}		9	-18 mA							"								"	S		-1.2	"
			10		-18 mA						"								"	1A		"	"
			11			-18 mA					"								"	1B		"	"
			12					-18 mA			"								"	2A		"	"
			13						-18 mA		"								"	2B		"	"
			14								"		-18 mA						"	3B		"	"
			15								"			-18 mA					"	3A		"	"
			16								"					-18 mA			"	4B		"	"
			17								"						-18 mA		"	4A		"	"
			18								"							-18 mA	"	G		"	"
	I_{IL}	3009	19	5.5 V							"							0.5 V	5.5 V	G	-2 6/	-4 6/	mA
		"	20	0.5 V							"							5.5 V	"	S	-2 6/	-4 6/	"
		"	21	GND	0.5 V						"							GND	"	1A	-1 7/	-2 7/	"
		"	22	5.5 V		0.5 V					"							"	"	1B	" "	" "	"
		"	23	GND				0.5 V			"							"	"	2A	" "	" "	"
		"	24	5.5 V					0.5 V		"							"	"	2B	" "	" "	"
		"	25	5.5 V							"		0.5 V					"	"	3B	" "	" "	"
		"	26	GND							"			0.5 V				"	"	3A	" "	" "	"
		"	27	5.5 V							"					0.5 V		"	"	4B	" "	" "	"
		"	28	GND							"						0.5 V	"	"	4A	" "	" "	"
	I_{IH1}	3010	29	GND							"							2.7 V	"	G		100	μA
		"	30	2.7 V							"							GND	"	S		100	"
		"	31		2.7 V						"							5.5 V	"	1A		50	"
		"	32			2.7 V					"							"	"	1B		"	"
		"	33					2.7 V			"							"	"	2A		"	"
		"	34						2.7 V		"							"	"	2B		"	"
		"	35								"		2.7 V					"	"	3B		"	"
		"	36								"			2.7 V				"	"	3A		"	"
		"	37								"					2.7 V		"	"	4B		"	"
		"	38								"						2.7 V	"	"	4A		"	"
	I_{IH2}	"	39	GND							"							"	"	G		1.0	mA
		"	40	5.5 V							"							GND	"	S		"	"
		"	41		5.5 V						"							5.5 V	"	1A		"	"
		"	42			5.5 V					"							"	"	1B		"	"
		"	43					5.5 V			"							"	"	2A		"	"
		"	44						5.5 V		"							"	"	2B		"	"
		"	45								"		5.5 V					"	"	3B		"	"
		"	46								"			5.5 V				"	"	3A		"	"
		"	47								"					5.5 V		"	"	4B		"	"
		"	48								"						5.5 V	"	"	4A		"	"
	I_{OS}	3011	49	5.5 V		5.5 V	GND				"							GND	"	1Y	-40	-100 1/	"
		3011	50	5.5 V					5.5 V	GND	"							GND	"	2Y	-40	-100 1/	"

See footnotes at end of device type 03.

TABLE III. Group A inspection for device type 03 - Continued.
Terminal conditions (pins not designated may be H ≥2.0 V, or L ≤0.8 V, or open)

Subgroup	Symbol	MIL-STD-883 method	Cases E,F, X,2 5/	1	2	3	4	5	6	7	8	9	10	11	12	13	14	15	16	Measured terminal	Test limits Min	Test limits Max	Unit
				2	3	4	5	7	8	9	10	12	13	14	15	17	18	19	20				
			Test no.	S	1A	1B	1Y	2A	2B	2Y	GND	3Y	3B	3A	4Y	4B	4A	G	V_{CC}				
1 T_C = +25°C	I_{OS}	3011	51	5.5 V							GND	GND	5.5 V		GND	5.5 V		GND	5.5 V	3Y	-40	-100 1/	mA
		3011	52	"							"							GND	"	4Y	-40	-100 1/	"
	I_{CC}	3005	53	"	GND	GND		GND	GND		"		GND	GND		GND	GND	5.5 V	"	V_{CC}		78	
	I_{CEX}		54	"		5.5 V	5.5 V				"							GND	"	1Y		250	μA
			55	"					5.5 V	5.5 V	"							"	"	2Y		"	"
			56	"							"	5.5 V	5.5 V					"	"	3Y		"	"
			57	"							"				5.5 V	5.5 V		"	"	4Y		"	"
2	Same tests, terminal conditions, and limits as for subgroup 1, except T_C = +125°C and V_{IC} tests are omitted. V_{IL} = 0.7 V, $V_{OL(max)}$ = 0.45 V.																						
3	Same tests, terminal conditions, and limits as for subgroup 1, except T_C = -55°C and V_{IC} tests are omitted.																						
7 4/ T_C = +25°C	Truth table test	3014	58	A 2/	A 2/	A 2/	L	A 2/	A 2/	L	GND	L	A 2/	A 2/	L	A 2/	A 2/	A 2/	4.5 V	See 3/			
		"	59	"	A	B	L				"							B	"	"			
		"	60	"	B	A	H				"							"	"	"			
		"	61	B	B	A	L				"							"	"	"			
		"	62	B	A	B	H				"							"	"	"			
		"	63	A				A	B	L	"							"	"	"			
		"	64	A				B	A	H	"							"	"	"			
		"	65	B				B	A	L	"							"	"	"			
		"	66	B				A	B	H	"							"	"	"			
		"	67	A							"	L	B	A				"	"	"			
		"	68	A							"	H	A	B				"	"	"			
		"	69	B							"	L	A	B				"	"	"			
		"	70	B							"	H	B	A				"	"	"			
		"	71	A							"				L	B	A	"	"	"			
		"	72	A							"				H	A	B	"	"	"			
		"	73	B							"				L	A	B	"	"	"			
		"	74	B							"				H	B	A	"	"	"			
8 4/	Same tests, terminal conditions, and limits as for subgroup 7, except T_C = +125°C and -55°C.																						
9 T_C = +25°C	t_{PHL1}	3003	75	IN	GND	2.7 V	OUT	GND	2.7 V	OUT	GND							GND	5.0 V	1Y	2.0	14	ns
		Fig. 7	76	"							"							"	"	2Y	"	"	"
		"	77	"							"	OUT	2.7 V	GND				"	"	3Y	"	"	"
		"	78	"							"				OUT	2.7 V	GND	"	"	4Y	"	"	"
	t_{PLH1}	"	79	"	GND	2.7 V	OUT				"							"	"	1Y	"	"	"
		"	80	"				GND	2.7 V	OUT	"							"	"	2Y	"	"	"
		"	81	"							"	OUT	2.7 V	GND				"	"	3Y	"	"	"
		"	82	"							"				OUT	2.7 V	GND	"	"	4Y	"	"	"
	t_{PHL2}	"	83	GND	IN	GND	OUT				"							"	"	1Y	"	9.0	"
		"	84	"				IN	GND	OUT	"							"	"	2Y	"	"	"
		"	85	"							"	OUT	GND	IN				"	"	3Y	"	"	"
		"	86	"							"				OUT	GND	IN	"	"	4Y	"	"	"
	t_{PLH2}	"	87	"	IN	GND	OUT				"							"	"	1Y	"	"	"
		"	88	"				IN	GND	OUT	"							"	"	2Y	"	"	"
		"	89	"							"	OUT	GND	IN				"	"	3Y	"	"	"
		"	90	"							"				OUT	GND	IN	"	"	4Y	"	"	"

See footnotes at end of device type 03.

TABLE III. Group A inspection for device type 03 - Continued.
Terminal conditions (pins not designated may be H ≥2.0 V, or L ≤0.8 V, or open)

Subgroup	Symbol	MIL-STD-883 method	Cases E,F, X,2 5/	1	2	3	4	5	6	7	8	9	10	11	12	13	14	15	16	Measured terminal	Test limits Min	Test limits Max	Unit
				2	3	4	5	7	8	9	10	12	13	14	15	17	18	19	20				
			Test no.	S	1A	1B	1Y	2A	2B	2Y	GND	3Y	3B	3A	4Y	4B	4A	G	V_{CC}				
9 T_C = +25°C	t_{PHL3}	3003 Fig. 7	91	GND	2.7 V	GND	OUT	2.7 V	GND	OUT	GND	OUT	GND	2.7 V	OUT	GND	2.7 V	IN	5.0 V	1Y	2.0	14	ns
		"	92	"							"							"	"	2Y	"	"	"
		"	93	"							"							"	"	3Y	"	"	"
		"	94	"							"							"	"	4Y	"	"	"
	t_{PLH3}	"	95	"	2.7 V	GND	OUT	2.7 V	GND	OUT	"	OUT	GND	2.7 V	OUT	GND	2.7 V	"	"	1Y	"	13.5	"
		"	96	"							"							"	"	2Y	"	"	"
		"	97	"							"							"	"	3Y	"	"	"
		"	98	"							"							"	"	4Y	"	"	"
10 T_C = +125°C	t_{PHL1}	"	99	IN	GND	2.7 V	OUT	GND	2.7 V	OUT	"	OUT	2.7 V	GND	OUT	2.7 V	GND	GND	"	1Y	"	18.5	"
		"	100	"							"							"	"	2Y	"	"	"
		"	101	"							"							"	"	3Y	"	"	"
		"	102	"							"							"	"	4Y	"	"	"
	t_{PLH1}	"	103	"	GND	2.7 V	OUT	GND	2.7 V	OUT	"	OUT	2.7 V	GND	OUT	2.7 V	GND	"	"	1Y	"	"	"
		"	104	"							"							"	"	2Y	"	"	"
		"	105	"							"							"	"	3Y	"	"	"
		"	106	"							"							"	"	4Y	"	"	"
	t_{PHL2}	"	107	GND	IN	GND	OUT	IN	GND	OUT	"	OUT	GND	IN	OUT	GND	IN	"	"	1Y	"	12	"
		"	108	"							"							"	"	2Y	"	"	"
		"	109	"							"							"	"	3Y	"	"	"
		"	110	"							"							"	"	4Y	"	"	"
	t_{PLH2}	"	111	"	IN	GND	OUT	IN	GND	OUT	"	OUT	GND	IN	OUT	GND	IN	"	"	1Y	"	"	"
		"	112	"							"							"	"	2Y	"	"	"
		"	113	"							"							"	"	3Y	"	"	"
		"	114	"							"							"	"	4Y	"	"	"
	t_{PHL3}	"	115	"	2.7 V	GND	OUT	2.7 V	GND	OUT	"	OUT	GND	2.7 V	OUT	GND	2.7 V	IN	"	1Y	"	18.5	"
		"	116	"							"							"	"	2Y	"	"	"
		"	117	"							"							"	"	3Y	"	"	"
		"	118	"							"							"	"	4Y	"	"	"
	t_{PLH3}	"	119	"	2.7 V	GND	OUT	2.7 V	GND	OUT	"	OUT	GND	2.7 V	OUT	GND	2.7 V	"	"	1Y	"	18	"
		"	120	"							"							"	"	2Y	"	"	"
		"	121	"							"							"	"	3Y	"	"	"
		"	122	"							"							"	"	4Y	"	"	"
11	Same tests, terminal conditions, and limits as for subgroup 10, except T_C = -55°C.																						

1/ For circuit B, $I_{OS(max)}$ = -110 mA.

2/ A = 2.4 V; B = 0.4 V.

3/ H ≥ 1.5 V; L ≤ 1.5 V.

4/ Only a summary of attributes is required.

5/ Case 2 pins not designated are NC.

6/ For circuit B, 0.1/-4 mA.

7/ For circuit B, 0.1/-2 mA.

TABLE III. Group A inspection for device type 04.
Terminal conditions (pins not designated may be H ≥2.0 V, or L ≤0.8 V, or open)

Subgroup	Symbol	MIL-STD-883 method	Cases E,F, X,2 5/	1	2	3	4	5	6	7	8	9	10	11	12	13	14	15	16	Measured terminal	Test limits Min	Test limits Max	Unit
				2	3	4	5	7	8	9	10	12	13	14	15	17	18	19	20				
			Test no.	S	1A	1B	1Y	2A	2B	2Y	GND	3Y	3B	3A	4Y	4B	4A	G	V_{CC}				
T_C = 1/ +25°C	V_{OH}	3006	1				-1 mA				GND							2.0 V	4.5 V	1Y	2.5		V
		"	2							-1 mA	"							"	"	2Y	"		"
		"	3								"	-1 mA						"	"	3Y	"		"
		"	4								"				-1 mA			"	"	4Y	"		"
	V_{OL}	3007	5	2.0 V		2.0 V	20 mA				"							0.8 V	"	1Y		0.5	"
		"	6	"					2.0 V	20 mA	"							"	"	2Y		"	"
		"	7	"							"	20 mA	2.0 V					"	"	3Y		"	"
		"	8	"							"				20 mA	2.0 V		"	"	4Y		"	"
	V_{IC}		9	-18 mA							"								"	S		-1.2	"
			10		-18 mA						"								"	1A		"	"
			11			-18 mA					"								"	1B		"	"
			12					-18 mA			"								"	2A		"	"
			13						-18 mA		"								"	2B		"	"
			14								"		-18 mA						"	3B		"	"
			15								"			-18 mA					"	3A		"	"
			16								"					-18 mA			"	4B		"	"
			17								"						-18 mA		"	4A		"	"
			18								"							-18 mA	"	G		"	"
	I_{IL}	3009	19	5.5 V							"							0.5 V	5.5 V	G	-2 6/	-4 6/	mA
		"	20	0.5 V							"							5.5 V	"	S	-2 6/	-4 6/	"
		"	21	GND	0.5 V						"							GND	"	1A	-1 7/	-2 7/	"
		"	22	5.5 V		0.5 V					"							"	"	1B	" "	" "	"
		"	23	GND				0.5 V			"							"	"	2A	" "	" "	"
		"	24	5.5 V					0.5 V		"							"	"	2B	" "	" "	"
		"	25	5.5 V							"		0.5 V					"	"	3B	" "	" "	"
		"	26	GND							"			0.5 V				"	"	3A	" "	" "	"
		"	27	5.5 V							"					0.5 V		"	"	4B	" "	" "	"
		"	28	GND							"						0.5 V	"	"	4A	" "	" "	"
	I_{IH1}	3010	29	GND							"							2.7 V	"	G		100	μA
		"	30	2.7 V							"							GND	"	S		100	"
		"	31		2.7 V						"							5.5 V	"	1A		50	"
		"	32			2.7 V					"							"	"	1B		"	"
		"	33					2.7 V			"							"	"	2A		"	"
		"	34						2.7 V		"							"	"	2B		"	"
		"	35								"		2.7 V					"	"	3B		"	"
		"	36								"			2.7 V				"	"	3A		"	"
		"	37								"					2.7 V		"	"	4B		"	"
		"	38								"						2.7 V	"	"	4A		"	"
	I_{IH2}	"	39	GND							"							"	"	G		1.0	mA
		"	40	5.5 V							"							GND	"	S		"	"
		"	41		5.5 V						"							5.5 V	"	1A		"	"
		"	42			5.5 V					"							"	"	1B		"	"
		"	43					5.5 V			"							"	"	2A		"	"
		"	44						5.5 V		"							"	"	2B		"	"
		"	45								"		5.5 V					"	"	3B		"	"
		"	46								"			5.5 V				"	"	3A		"	"
		"	47								"					5.5 V		"	"	4B		"	"
		"	48								"						5.5 V	"	"	4A		"	"
	I_{OS}	3011	49				GND				"							"	"	1Y	-40	-100 1/	"
		3011	50							GND	"							"	"	2Y	-40	-100 1/	"

See footnotes at end of device type 04.

TABLE III. Group A inspection for device type 04 - Continued.
Terminal conditions (pins not designated may be H ≥2.0 V, or L ≤0.8 V, or open)

Subgroup	Symbol	MIL-STD-883 method	Cases E,F, X,2 5/ Test no.	1 2 S	2 3 1A	3 4 1B	4 5 1Y	5 7 2A	6 8 2B	7 9 2Y	8 10 GND	9 12 3Y	10 13 3B	11 14 3A	12 15 4Y	13 17 4B	14 18 4A	15 19 G	16 20 V_{CC}	Measured terminal	Test limits Min	Test limits Max	Unit
1 T_C = +25°C	I_{OS}	3011 3011	51 52								GND "	GND			GND			5.5 V "	5.5 V "	3Y 4Y	-40 -40	-100 1/ -100 1/	mA "
	I_{CC}	3005	53	5.5 V	GND	GND		GND	GND		"		GND	GND		GND	GND	"	"	V_{CC}		61	"
	I_{CEX}		54 55 56 57	" " " "	" " " "	" " " "	5.5 V	" " " "	" " " "	5.5 V	" " " "	5.5 V	" " " "	" " " "	5.5 V	" " " "	" " " "	" " " "	" " " "	1Y 2Y 3Y 4Y		250 " " "	μA " " "
2	Same tests, terminal conditions, and limits as for subgroup 1, except T_C = +125°C and V_{IC} tests are omitted. V_{IL} = 0.7 V, $V_{OL(max)}$ = 0.45 V.																						
3	Same tests, terminal conditions, and limits as for subgroup 1, except T_C = -55°C and V_{IC} tests are omitted.																						
7 T_C = +25°C	Truth table test	3014 " " " " " " " " " " " " " " " " "	58 59 60 61 62 63 64 65 66 67 68 69 70 71 72 73 74	B 2/ A A B B A A B B A A B B A A B B	A 2/ B A A A	B 2/ A B B A	L L H L H	A 2/ B A A B	B 2/ A B B A	L L H L H	GND " " " " " " " " " " " " " " " "	L L H L H	B 2/ A B B A	A 2/ B A A B	L L H L H	B 2/ A B B A	A 2/ B A A B	B " " " " " " " " " " " " " " "	4.5 V " " " " " " " " " " " " " " "	See 3/ " " " " " " " " " " " " " " "			
8 4/	Same tests, terminal conditions, and limits as for subgroup 7, except T_C = +125°C and -55°C.																						
9 T_C = +25°C	t_{PHL1}	3003 Fig. 7 " "	75 76 77 78	IN " " "	GND	2.7 V	OUT	GND	2.7 V	OUT	GND " " "	OUT	2.7 V	GND	OUT	2.7 V	GND	GND " " "	5.0 V " " "	1Y 2Y 3Y 4Y	2.0 " " "	14 " " "	ns " " "
	t_{PLH1}	" " " "	79 80 81 82	" " " "	GND	2.7 V	OUT	GND	2.7 V	OUT	" " " "	OUT	2.7 V	GND	OUT	2.7 V	GND	" " " "	" " " "	1Y 2Y 3Y 4Y	" " " "	" " " "	" " " "
	t_{PHL2}	" " " "	83 84 85 86	GND " " "	IN	GND	OUT	IN	GND	OUT	" " " "	OUT	GND	IN	OUT	GND	IN	" " " "	" " " "	1Y 2Y 3Y 4Y	" " " "	8.0 " " "	" " " "
	t_{PLH2}	" " " "	87 88 89 90	" " " "	IN	GND	OUT	IN	GND	OUT	" " " "	OUT	GND	IN	OUT	GND	IN	" " " "	" " " "	1Y 2Y 3Y 4Y	" " " "	" " " "	" " " "

See footnotes at end of device type 04.

TABLE III. Group A inspection for device type 04 - Continued.
Terminal conditions (pins not designated may be H ≥2.0 V, or L ≤0.8 V, or open)

Subgroup	Symbol	MIL-STD-883 method	Cases E,F, X,2 5/ Test no.	1 / 2 / S	2 / 3 / 1A	3 / 4 / 1B	4 / 5 / 1Y	5 / 7 / 2A	6 / 8 / 2B	7 / 9 / 2Y	8 / 10 / GND	9 / 12 / 3Y	10 / 13 / 3B	11 / 14 / 3A	12 / 15 / 4Y	13 / 17 / 4B	14 / 18 / 4A	15 / 19 / G	16 / 20 / V_{CC}	Measured terminal	Test limits Min	Test limits Max	Unit
T_C = 9 +25°C	t_{PHL3}	3003 Fig. 7	91	GND	2.7 V	GND	OUT	2.7 V	GND	OUT	GND	OUT	GND	2.7 V	OUT	GND	2.7 V	IN	5.0 V	1Y	2.0	14	ns
		"	92	"							"							"	"	2Y	"	"	"
		"	93	"							"							"	"	3Y	"	"	"
		"	94	"							"							"	"	4Y	"	"	"
	t_{PLH3}	"	95	"	2.7 V	GND	OUT	2.7 V	GND	OUT	"	OUT	GND	2.7 V	OUT	GND	2.7 V	"	"	1Y	"	13.5	"
		"	96	"							"							"	"	2Y	"	"	"
		"	97	"							"							"	"	3Y	"	"	"
		"	98	"							"							"	"	4Y	"	"	"
T_C = 10 +125°C	t_{PHL1}	"	99	IN	GND	2.7 V	OUT	GND	2.7 V	OUT	"	OUT	2.7 V	GND	OUT	2.7 V	GND	GND	"	1Y	"	18.5	"
		"	100	"							"							"	"	2Y	"	"	"
		"	101	"							"							"	"	3Y	"	"	"
		"	102	"							"							"	"	4Y	"	"	"
	t_{PLH1}	"	103	"	GND	2.7 V	OUT	GND	2.7 V	OUT	"	OUT	2.7 V	GND	OUT	2.7 V	GND	"	"	1Y	"	"	"
		"	104	"							"							"	"	2Y	"	"	"
		"	105	"							"							"	"	3Y	"	"	"
		"	106	"							"							"	"	4Y	"	"	"
	t_{PHL2}	"	107	GND	IN	GND	OUT	IN	GND	OUT	"	OUT	GND	IN	OUT	GND	IN	"	"	1Y	"	11	"
		"	108	"							"							"	"	2Y	"	"	"
		"	109	"							"							"	"	3Y	"	"	"
		"	110	"							"							"	"	4Y	"	"	"
	t_{PLH2}	"	111	"	IN	GND	OUT	IN	GND	OUT	"	OUT	GND	IN	OUT	GND	IN	"	"	1Y	"	"	"
		"	112	"							"							"	"	2Y	"	"	"
		"	113	"							"							"	"	3Y	"	"	"
		"	114	"							"							"	"	4Y	"	"	"
	t_{PHL3}	"	115	"	2.7 V	GND	OUT	2.7 V	GND	OUT	"	OUT	GND	2.7 V	OUT	GND	2.7 V	IN	"	1Y	"	18.5	"
		"	116	"							"							"	"	2Y	"	"	"
		"	117	"							"							"	"	3Y	"	"	"
		"	118	"							"							"	"	4Y	"	"	"
	t_{PLH3}	"	119	"	2.7 V	GND	OUT	2.7 V	GND	OUT	"	OUT	GND	2.7 V	OUT	GND	2.7 V	"	"	1Y	"	18	"
		"	120	"							"							"	"	2Y	"	"	"
		"	121	"							"							"	"	3Y	"	"	"
		"	122	"							"							"	"	4Y	"	"	"
11	Same tests, terminal conditions, and limits as for subgroup 10, except T_C = -55°C.																						

1/ For circuit B, $I_{OS(max)}$ = -110 mA.

2/ A = 2.4 V; B = 0.4 V.

3/ H ≥ 1.5 V; L ≤ 1.5 V.

4/ Only a summary of attributes is required.

5/ Case 2 pins not designated are NC.

6/ For circuit B, 0.1/-4 mA.

7/ Circuit B, 0.1/-2 mA.

TABLE III. Group A inspection for device type 05.
Terminal conditions (pins not designated may be H ≥2.0 V, or L ≤0.8 V, or open)

Subgroup	Symbol	MIL-STD-883 method	Cases E,F, X,2 5/	1	2	3	4	5	6	7	8	9	10	11	12	13	14	15	16	Measured terminal	Test limits Min	Test limits Max	Unit
				2	3	4	5	7	8	9	10	12	13	14	15	17	18	19	20				
			Test no.	D3	D2	D1	D0	Y	W	ST	GND	C	B	A	D7	D6	D5	D4	V_{CC}				
T_C = +25°C 1/	V_{OL}	3007	1				2.0 V		20 mA	0.8 V	GND	0.8 V	0.8 V	0.8 V					4.5 V	W		0.5	V
		3007	2					20 mA		"	"	2.0 V	2.0 V	2.0 V	0.8 V				"	Y		0.5	"
	V_{OH}	3006	3						-2 mA	"	"	2.0 V	2.0 V	2.0 V	0.8 V				"	W	2.4		"
		3006	4				2.0 V	-2 mA		"	"	0.8 V	0.8 V	0.8 V					"	Y	2.4		"
	I_{OFF1}		5						2.7 V	2.0 V	"								5.5 V	W		50	μA
			6					2.7 V		"	"								"	Y		50	"
	I_{OFF2}		7						0.5 V	"	"								"	W		-50	"
			8					0.5 V		"	"								"	Y		-50	"
	I_{OS}	3011	9						GND	GND	"	5.5 V	5.5 V	5.5 V	GND				5.5 V	W	-40	-100 1/	mA
		3011	10				5.5 V	GND		GND	"	GND	GND	GND					"	Y	-40	-100 1/	"
	I_{IH1}	3010	11	2.7 V						5.5 V	"	5.5 V	"	GND					"	D3		50	μA
		"	12		2.7 V					"	"	"	"	5.5 V					"	D2		"	"
		"	13			2.7 V				"	"	"	5.5 V	GND					"	D1		"	"
		"	14				2.7 V			"	"	"	5.5 V	5.5 V					"	D0		"	"
		"	15							2.7 V	"								"	ST		"	"
		"	16								"	2.7 V							"	C		"	"
		"	17								"		2.7 V						"	B		"	"
		"	18								"			2.7 V					"	A		"	"
		"	19							5.5 V	"	GND	GND	GND	2.7 V				"	D7		"	"
		"	20							"	"	"	GND	5.5 V		2.7 V			"	D6		"	"
		"	21							"	"	"	5.5 V	GND			2.7 V		"	D5		"	"
		"	22							"	"	"	5.5 V	5.5 V				2.7 V	"	D4		"	"
	I_{IH2}	"	23	5.5 V						"	"	5.5 V	GND	GND					"	D3		1.0	mA
		"	24		5.5 V					"	"	"	GND	5.5 V					"	D2		"	"
		"	25			5.5 V				"	"	"	5.5 V	GND					"	D1		"	"
		"	26				5.5 V			"	"	"	5.5 V	5.5 V					"	D0		"	"
		"	27							"	"								"	ST		"	"
		"	28								"	5.5 V							"	C		"	"
		"	29								"		5.5 V						"	B		"	"
		"	30								"			5.5 V					"	A		"	"
		"	31							5.5 V	"	GND	GND	GND	5.5 V				"	D7		"	"
		"	32							"	"	"	GND	5.5 V		5.5 V			"	D6		"	"
		"	33							"	"	"	5.5 V	GND			5.5 V		"	D5		"	"
		"	34							"	"	"	"	5.5 V				5.5 V	"	D4		"	"
	I_{IL}	3009	35	0.5 V						GND	"	"	"	5.5 V					"	D3	-1	-2	"
		"	36		0.5 V					"	"	"	"	GND					"	D2	"	"	"
		"	37			0.5 V				"	"	"	GND	5.5 V					"	D1	"	"	"
		"	38				0.5 V			"	"	"	GND	GND					"	D0	"	"	"
		"	39							0.5 V	"								"	ST	"	"	"
		"	40								"	0.5 V							"	C	"	"	"
		"	41								"		0.5 V						"	B	"	"	"
		"	42								"			0.5 V					"	A	"	"	"
		"	43							GND	"	5.5 V	5.5 V	5.5 V	0.5 V				"	D7	"	"	"
		"	44							"	"	"	5.5 V	GND		0.5 V			"	D6	"	"	"
		"	45							"	"	"	GND	5.5 V			0.5 V		"	D5	"	"	"
		"	46							"	"	"	GND	GND				0.5 V	"	D4	"	"	"
	I_{CCO}	3005	47	5.5 V	5.5 V	5.5 V	5.5 V			5.5 V	"	5.5 V	5.5 V	5.5 V	5.5 V	5.5 V	5.5 V	5.5 V	"	V_{CC}		85	"

See footnotes at end of device type 05.

(... designated may be H ≥2.0 V, or L ≤0.8 V, or open)

Subgroup	Symbol	MIL-STD-883 method	Cases E,F, X,2 5/	1	2	3	4	5	6	7	8	9	10	11	12	13	14	15	16	Measured terminal	Test limits Min	Test limits Max	Unit
				2	3	4	5	7	8	9	10	12	13	14	15	17	18	19	20				
			Test no.	D3	D2	D1	D0	Y	W	ST	GND	C	B	A	D7	D6	D5	D4	V_{CC}				
1 T_C = +25°C	I_{CEX}		48								GND	5.5 V	5.5 V	5.5 V	GND				5.5 V	W		250	μA
			49				5.5 V	5.5 V	5.5 V	GND	"	GND	GND	GND					"	Y		250	μA
	V_{IC}		50	-18 mA							"								4.5 V	D3		-1.2	V
			51		-18 mA						"								"	D2		"	"
			52			-18 mA					"								"	D1		"	"
			53				-18 mA				"								"	D0		"	"
			54							-18 mA	"								"	ST		"	"
			55								"	-18 mA							"	C		"	"
			56								"		-18 mA						"	B		"	"
			57								"			-18 mA					"	A		"	"
			58								"				-18 mA				"	D7		"	"
			59								"					-18 mA			"	D6		"	"
			60								"						-18 mA		"	D5		"	"
			61								"							-18 mA	"	D4		"	"
2	Same tests, terminal conditions, and limits as for subgroup 1, except T_C = +125°C and V_{IC} tests are omitted. V_{IL} = 0.7 V, $V_{OL(max)}$ = 0.45 V.																						
3	Same tests, terminal conditions, and limits as for subgroup 1, except T_C = -55°C and V_{IC} tests are omitted.																						
7 T_C = +25°C	Truth table test	3014	62	A 2/	A 2/	A 2/	B 2/	L	H	B 2/	GND	B 2/	B 2/	B 2/	A 2/	A 2/	A 2/	A 2/	4.5 V	3/			
		"	63	B	B	B	A	H	L	"	"	"	"	B	B	B	B	B	"	"			
		"	64	A	A	A	A	L	H	"	"	"	"	A	A	A	A	A	"	"			
		"	65	B	B	B	B	H	L	"	"	"	"	A	B	B	B	B	"	"			
		"	66	A	B	A	A	L	H	"	"	"	"	B	A	A	A	A	"	"			
		"	67	B	A	B	B	H	L	"	"	"	"	B	B	B	B	B	"	"			
		"	68	B	A	A	A	L	H	"	"	"	"	A	A	A	A	A	"	"			
		"	69	A	B	B	B	H	L	"	"	"	"	B	B	B	B	B	"	"			
		"	70	A	A	A	A	L	H	"	"	"	"	A	A	A	A	A	"	"			
		"	71	B	B	B	B	H	L	"	"	"	"	B	B	B	B	B	"	"			
		"	72	A	A	A	A	L	H	"	"	"	"	A	A	A	A	A	"	"			
		"	73	B	B	B	B	H	L	"	"	"	"	B	B	B	B	B	"	"			
		"	74	A	A	A	A	L	H	"	"	"	"	A	A	A	A	A	"	"			
		"	75	B	B	B	B	H	L	"	"	"	"	B	B	B	B	B	"	"			
		"	76	A	A	A	A	L	H	"	"	"	"	A	A	A	A	A	"	"			
		"	77	B	B	B	B	H	L	"	"	"	"	B	B	B	B	B	"	"			
8	Repeat subgroup 7 at T_C = +125°C and -55°C.																						
9 T_C = +25°C	t_{PHL1}	3003 Fig. 9	78		2.7 V	2.7 V	GND		OUT	GND	GND	GND	GND	IN					5.0 V	W	2.0	15.5	ns
		"	79				"		"	"	"	GND	IN	GND				2.7 V	"	"	"	"	"
		"	80				"		"	"	"	IN	GND	GND					"	"	"	"	"
	t_{PLH1}	"	81		2.7 V	2.7 V	"		"	"	"	GND	GND	IN					"	"	"	17.0	"
		"	82				"		"	"	"	GND	IN	GND					"	"	"	"	"
		"	83				"		"	"	"	IN	GND	GND				2.7 V	"	"	"	"	"
	t_{PHL2}	"	84		2.7 V	2.7 V	"	OUT		"	"	GND	GND	IN					"	Y	"	21.5	"
		"	85				"	"		"	"	GND	IN	GND					"	"	"	"	"
		"	86				"	"		"	"	IN	GND	GND				2.7 V	"	"	"	"	"
	t_{PLH2}	"	87		2.7 V	2.7 V	"	"		"	"	GND	GND	IN					"	"	"	20.0	"
		"	88				"	"		"	"	GND	IN	GND					"	"	"	"	"
		"	89				"	"		"	"	IN	GND	"				2.7 V	"	"	"	"	"
	t_{PHL3}	"	90						OUT	"	"	GND	GND	GND					"	W	"	9.0	"
		"	91						"	"	"	"	GND	2.7 V					"	"	"	"	"
		"	92		IN	IN	IN		"	"	"	"	2.7 V	GND					"	"	"	"	"
		"	93	IN					"	"	"	"	2.7 V	2.7 V					"	"	"	"	"
		"	94						"	"	"	"	GND	GND					"	"	"	"	"
		"	95						"	"	"	2.7 V	GND	2.7 V					"	"	"	"	"
		"	96						"	"	"	"	2.7 V	GND					"	"	"	"	"
		"	97						"	"	"	"	2.7 V	2.7 V	IN	IN	IN	IN	"	"	"	"	"

TABLE III. Group A inspection for device type 05 - Continued.
Terminal conditions (pins not designated may be H ≥2.0 V, or L ≤0.8 V, or open)

Subgroup	Symbol	MIL-STD-883 method	Cases E,F, X,2 5/	1	2	3	4	5	6	7	8	9	10	11	12	13	14	15	16	Measured terminal	Test limits Min	Test limits Max	Unit
				2	3	4	5	7	8	9	10	12	13	14	15	17	18	19	20				
			Test no.	D3	D2	D1	D0	Y	W	ST	GND	C	B	A	D7	D6	D5	D4	V_{CC}				
9 T_C = +25°C	t_{PLH3}	3003 Fig. 9	98				IN		OUT	GND	GND	GND	GND	GND					5.0 V	W	2.0	9.0	ns
		"	99			IN			"	"	"	"	GND	2.7 V					"	"	"	"	"
		"	100		IN				"	"	"	"	2.7 V	GND					"	"	"	"	"
		"	101	IN					"	"	"	"	2.7 V	2.7 V					"	"	"	"	"
		"	102						"	"	"	2.7 V	GND	GND				IN	"	"	"	"	"
		"	103						"	"	"	"	GND	2.7 V			IN		"	"	"	"	"
		"	104						"	"	"	"	2.7 V	GND		IN			"	"	"	"	"
		"	105						"	"	"	"	2.7 V	2.7 V	IN				"	"	"	"	"
	t_{PHL4}	"	106				IN	OUT		"	"	GND	GND	GND					"	Y	"	14.0	"
		"	107			IN		"		"	"	"	GND	2.7 V					"	"	"	"	"
		"	108		IN			"		"	"	"	2.7 V	GND					"	"	"	"	"
		"	109	IN				"		"	"	"	2.7 V	2.7 V				IN	"	"	"	"	"
		"	110					"		"	"	2.7 V	GND	GND					"	"	"	"	"
		"	111					"		"	"	"	GND	2.7 V			IN		"	"	"	"	"
		"	112					"		"	"	"	2.7 V	GND		IN			"	"	"	"	"
		"	113					"		"	"	"	2.7 V	2.7 V	IN				"	"	"	"	"
	t_{PLH4}	"	114				IN	"		"	"	GND	GND	GND					"	"	"	"	"
		"	115			IN		"		"	"	"	GND	2.7 V					"	"	"	"	"
		"	116		IN			"		"	"	"	2.7 V	GND					"	"	"	"	"
		"	117	IN				"		"	"	"	2.7 V	2.7 V				IN	"	"	"	"	"
		"	118					"		"	"	2.7 V	GND	GND					"	"	"	"	"
		"	119					"		"	"	"	GND	2.7 V			IN		"	"	"	"	"
		"	120					"		"	"	"	2.7 V	GND		IN			"	"	"	"	"
		"	121					"		"	"	"	2.7 V	2.7 V	IN				"	"	"	"	"
	t_{ZH}	"	122				GND		OUT	IN	"	GND	GND	GND					"	W	"	19.5	"
	t_{ZL}	"	123				2.7 V		"	"	"	"	"	"					"	"	"	21	"
	t_{HZ}	"	124				GND		"	"	"	"	"	"					"	"	"	21	"
	t_{LZ}	"	125				2.7 V		"	"	"	"	"	"					"	"	"	17	"
	t_{ZH}	"	126				2.7 V	OUT		"	"	"	"	"					"	Y	"	19.5	"
	t_{ZL}	"	127				GND	"		"	"	"	"	"					"	"	"	21	"
	t_{HZ}	"	128				2.7 V	"		"	"	"	"	"					"	"	"	21	"
	t_{LZ}	"	129				GND	"		"	"	"	"	"					"	"	"	17	"
10 T_C = +125°C	t_{PHL1}	"	130		2.7 V	2.7 V	GND		OUT	GND	"	GND	GND	IN				2.7 V	"	W	"	20	"
		"	131						"	"	"	GND	IN	GND					"	"	"	"	"
		"	132						"	"	"	IN	GND	GND					"	"	"	"	"
	t_{PLH1}	"	133		2.7 V	2.7 V			"	"	"	GND	GND	IN				2.7 V	"	"	"	22	"
		"	134						"	"	"	GND	IN	GND					"	"	"	"	"
		"	135						"	"	"	IN	GND	GND					"	"	"	"	"

See footnotes at end of device type 05.

TABLE III. Group A inspection for device type 05 - Continued.
Terminal conditions (pins not designated may be H ≥2.0 V, or L ≤0.8 V, or open)

Subgroup	Symbol	MIL-STD-883 method	Cases E,F, X,2 5/	1	2	3	4	5	6	7	8	9	10	11	12	13	14	15	16	Measured terminal	Test limits Min	Test limits Max	Unit
				2	3	4	5	7	8	9	10	12	13	14	15	17	18	19	20				
			Test no.	D3	D2	D1	D0	Y	W	ST	GND	C	B	A	D7	D6	D5	D4	V_{CC}				
10 T_C = +125°C	t_{PHL2}	3003 Fig. 9	136					OUT		GND	GND	GND	GND	IN					5.0 V	Y	2.0	28	ns
		"	137		2.7 V	2.7 V		"		"	"	GND	IN	GND					"	"	"	"	"
		"	138					"		"	"	IN	GND	GND				2.7 V	"	"	"	"	"
	t_{PLH2}	"	139					"		"	"	GND	GND	IN					"	"	"	26	"
		"	140		2.7 V	2.7 V		"		"	"	GND	IN	GND					"	"	"	"	"
		"	141				GND	"		"	"	IN	GND	GND				2.7 V	"	"	"	"	"
	t_{PHL3}	"	142						OUT	"	"	GND	GND	GND					5.0 V	W	2.0	11.5	ns
		"	143			IN	IN		"	"	"	"	GND	2.7 V					"	"	"	"	"
		"	144		IN				"	"	"	"	2.7 V	GND					"	"	"	"	"
		"	145	IN					"	"	"	"	2.7 V	2.7 V					"	"	"	"	"
		"	146						"	"	"	2.7 V	GND	GND				IN	"	"	"	"	"
		"	147						"	"	"	"	GND	2.7 V			IN		"	"	"	"	"
		"	148						"	"	"	"	2.7 V	GND		IN			"	"	"	"	"
		"	149						"	"	"	"	2.7 V	2.7 V	IN				"	"	"	"	"
	t_{PLH3}	"	150						"	"	"	GND	GND	GND					"	"	"	"	"
		"	151			IN	IN		"	"	"	"	GND	2.7 V					"	"	"	"	"
		"	152		IN				"	"	"	"	2.7 V	GND					"	"	"	"	"
		"	153	IN					"	"	"	"	2.7 V	2.7 V					"	"	"	"	"
		"	154						"	"	"	2.7 V	GND	GND				IN	"	"	"	"	"
		"	155						"	"	"	"	GND	2.7 V			IN		"	"	"	"	"
		"	156						"	"	"	"	2.7 V	GND		IN			"	"	"	"	"
		"	157						"	"	"	"	2.7 V	2.7 V	IN				"	"	"	"	"
	t_{PHL4}	"	158					OUT		"	"	GND	GND	GND					"	Y	"	18	"
		"	159			IN	IN	"		"	"	"	GND	2.7 V					"	"	"	"	"
		"	160		IN			"		"	"	"	2.7 V	GND					"	"	"	"	"
		"	161	IN				"		"	"	"	2.7 V	2.7 V					"	"	"	"	"
		"	162					"		"	"	2.7 V	GND	GND				IN	"	"	"	"	"
		"	163					"		"	"	"	GND	2.7 V			IN		"	"	"	"	"
		"	164					"		"	"	"	2.7 V	GND		IN			"	"	"	"	"
		"	165					"		"	"	"	2.7 V	2.7 V	IN				"	"	"	"	"
	t_{PLH4}	"	166					"		"	"	GND	GND	GND					"	"	"	"	"
		"	167			IN	IN	"		"	"	"	GND	2.7 V					"	"	"	"	"
		"	168		IN			"		"	"	"	2.7 V	GND					"	"	"	"	"
		"	169	IN				"		"	"	"	2.7 V	2.7 V					"	"	"	"	"
		"	170					"		"	"	2.7 V	GND	GND				IN	"	"	"	"	"
		"	171					"		"	"	"	GND	2.7 V			IN		"	"	"	"	"
		"	172					"		"	"	"	2.7 V	GND		IN			"	"	"	"	"
		"	173					"		"	"	"	2.7 V	2.7 V	IN				"	"	"	"	"
	t_{ZH1}	"	174				GND		OUT	IN	"	GND	GND	GND					"	W	"	25.5	"
	t_{ZL1}	"	175				2.7 V		"	"	"	"	"	"					"	"	"	27.5	"
	t_{HZ2}	"	176				GND		"	"	"	"	"	"					"	"	"	24	"
	t_{LZ2}	"	177				2.7 V		"	"	"	"	"	"					"	"	"	22	"
	t_{ZH3}	"	178				2.7 V	OUT		"	"	"	"	"					"	Y	"	25.5	"

See footnotes at end of device type 05.

TABLE III. Group A inspection for device type 05 - Continued.
Terminal conditions (pins not designated may be H ≥2.0 V, or L ≤0.8 V, or open)

Subgroup	Symbol	MIL-STD-883 method	Cases E,F, X,2 5/	1	2	3	4	5	6	7	8	9	10	11	12	13	14	15	16	Measured terminal	Test limits		Unit
				2	3	4	5	7	8	9	10	12	13	14	15	17	18	19	20		Min	Max	
			Test no.	D3	D2	D1	D0	Y	W	ST	GND	C	B	A	D7	D6	D5	D4	V_{CC}				
10 T_C = +125°C	t_{ZL3}	3003 Fig. 9	179				GND	OUT		IN	GND	GND	GND	GND					5.0 V	Y	2.0	27.5	ns
	t_{HZ4}	"	180				2.7 V	"		"	"	"	"	"					"	"	"	24	"
	t_{LZ4}	"	181				GND	"		"	"	"	"	"					"	"	"	22	"
11	Same tests, terminal conditions, and limits as for subgroup 10, except T_C = -55°C.																						

1/ For circuit B, $I_{OS(max)}$ = -110 mA.

2/ A = 2.4 V; B = 0.4 V.

3/ H ≥ 1.5 V; L ≤ 1.5 V.

4/ Only a summary of attributes is required.

5/ Case 2 pins not designated are NC.

TABLE III. Group A inspection for device type 06 - Continued.
Terminal conditions (pins not designated may be H ≥2.0 V, or L ≤0.8 V, or open)

Subgroup	Symbol	MIL-STD-883 Method	Cases E,F, X,2	1	2	3	4	5	6	7	8	9	10	11	12	13	14	15	16	Measured terminal	Test limits Min	Test limits Max	Unit
			Test no.	2	3	4	5	7	8	9	10	12	13	14	15	17	18	19	20				
				S	1A	1B	1Y	2A	2B	2Y	GND	3Y	3B	3A	4Y	4B	4A	OE	V_{CC}				
T_C [1] = +25°C	V_{OH}	3006	1	2.0 V		2.0 V	-2 mA				GND							0.8 V	4.5 V	1Y	2.4		V
		"	2	"					2.0 V	-2 mA	"							"	"	2Y	"		"
		"	3	"							"	-2 mA	2.0 V					"	"	3Y	"		"
		"	4	"							"				-2 mA	2.0 V		"	"	4Y	"		"
	V_{OL}	3007	5	0.8 V	0.8 V		20 mA				"							"	"	1Y		0.5	"
		"	6	"				0.8 V			"							"	"	2Y		"	"
		"	7	"						20 mA	"	20 mA		0.8 V				"	"	3Y		"	"
		"	8	"							"				20 mA		0.8 V	"	"	4Y		"	"
	I_{OFF1}		9	GND	GND		2.7 V				"							2.0 V	5.5 V	1Y		50	μA
			10	"				GND			"							"	"	2Y		"	"
			11	"						2.7 V	"	2.7 V						"	"	3Y		"	"
			12	"							"			GND				"	"	4Y		"	"
															2.7 V		GND						
	I_{OFF2}		13	5.5 V		5.5 V	0.5 V				"							"	"	1Y		-50	"
			14	"					5.5 V	0.5 V	"							"	"	2Y		"	"
			15	"							"	0.5 V	5.5 V					"	"	3Y		"	"
			16	"							"				0.5 V	5.5 V		"	"	4Y		"	"
	I_{CEX}		17	5.5 V		5.5 V	5.5 V				"							GND	"	1Y		250	"
			18	"					5.5 V	5.5 V	"							"	"	2Y		"	"
			19	"							"	5.5 V	5.5 V					"	"	3Y		"	"
			20	"							"				5.5 V	5.5 V		"	"	4Y		"	"
	I_{IL}	3009	21	0.5 V							"								"	S	-2.0	-4.0	mA
		"	22	GND							"							0.5 V	"	OE	-1.0	-2.0	"
		"	23	GND	0.5 V						"								"	1A	"	"	"
		"	24	5.5 V		0.5 V					"								"	1B	"	"	"
		"	25	GND				0.5 V			"								"	2A	"	"	"
		"	26	5.5 V					0.5 V		"								"	2B	"	"	"
		"	27	5.5 V							"		0.5 V						"	3B	"	"	"
		"	28	GND							"			0.5 V					"	3A	"	"	"
		"	29	5.5 V							"					0.5 V			"	4B	"	"	"
		"	30	GND							"						0.5 V		"	4A	"	"	"
	I_{IH1}	3010	31	2.7 V							"								"	S		100	μA
		"	32	5.5 V							"							2.7 V	"	OE		50	"
		"	33	5.5 V	2.7 V						"								"	1A		"	"
		"	34	GND		2.7 V					"								"	1B		"	"
		"	35	5.5 V				2.7 V			"								"	2A		"	"
		"	36	GND					2.7 V		"								"	2B		"	"
		"	37	GND							"		2.7 V						"	3B		"	"
		"	38	5.5 V							"			2.7 V					"	3A		"	"
		"	39	GND							"					2.7 V			"	4B		"	"
		"	40	5.5 V							"						2.7 V		"	4A		"	"
	I_{IH2}	"	41	5.5 V							"								"	S		1.0	mA
		"	42	5.5 V							"							5.5 V	"	OE		"	"
		"	43	5.5 V	5.5 V						"								"	1A		"	"
		"	44	GND		5.5 V					"								"	1B		"	"
		"	45	5.5 V				5.5 V			"								"	2A		"	"
		"	46	GND					5.5 V		"								"	2B		"	"
		"	47	GND							"		5.5 V						"	3B		"	"
		"	48	5.5 V							"			5.5 V					"	3A		"	"
		"	49	GND							"					5.5 V			"	4B		"	"
		"	50	5.5 V							"						5.5 V		"	4A		"	"

See footnotes at end of device type 06.

TABLE III. Group A inspection for device type 06 - Continued.
Terminal conditions (pins not designated may be H ≥2.0 V, or L ≤0.8 V, or open)

Subgroup	Symbol	MIL-STD-883 method	Cases E,F, X,2 7/	1	2	3	4	5	6	7	8	9	10	11	12	13	14	15	16	Measured terminal	Test limits Min	Test limits Max	Unit
			Test no.	2	3	4	5	7	8	9	10	12	13	14	15	17	18	19	20				
				S	1A	1B	1Y	2A	2B	2Y	GND	3Y	3B	3A	4Y	4B	4A	0E	V_{CC}				
1 T_C = +25°C	I_{OS}	3011	51	5.5 V		5.5 V	GND				GND							GND	5.5 V	1Y	-40	-100 1/	mA
		"	52	"					5.5 V	GND	"							"	"	2Y	"	"	"
		"	53	"							"	GND	5.5 V					"	"	3Y	"	"	"
		"	54	"							"				GND	5.5 V		"	"	4Y	"	"	"
	I_{CCH}	3005	55	"	GND	5.5 V		GND	5.5 V		"		5.5 V	GND		5.5 V	GND	"	"	V_{CC}		68	"
	I_{CCL}	"	56	GND	GND	GND		GND	GND		"		GND	GND		GND	GND	"	"	V_{CC}		93	"
	I_{CCO}	"	57	GND	GND	GND		GND	GND		"		GND	GND		GND	GND	5.5 V	"	V_{CC}		99	"
	V_{IC}		58	-18 mA							"								4.5 V	S		-1.2	V
			59		-18 mA						"								"	1A		"	"
			60			-18 mA					"								"	1B		"	"
			61					-18 mA			"								"	2A		"	"
			62						-18 mA		"								"	2B		"	"
			63								"		-18 mA						"	3B		"	"
			64								"			-18 mA					"	3A		"	"
			65								"					-18 mA			"	4B		"	"
			66								"						-18 mA		"	4A		"	"
			67								"							-18 mA	"	0E		"	"
2	Same tests, terminal conditions, and limits as for subgroup 1, except T_C = 125°C and V_{IC} tests are omitted. V_{IL} = 0.7 V, $V_{OL(max)}$ = 0.45 V.																						
3	Same tests, terminal conditions, and limits as for subgroup 1, except T_C = -55°C and V_{IC} tests are omitted.																						
7 T_C = +25°C	Truth table test	3014	68	A 2/	A 2/	B 2/	L				GND							B 2/	4.5 V	See 3/			
		"	69	A	B	A	H				"							"	"	"			
		"	70	B	B	A	L				"							"	"	"			
		"	71	B	A	B	H				"							"	"	"			
		"	72	A				A	B	L	"							"	"	"			
		"	73	A				B	A	H	"							"	"	"			
		"	74	B				B	A	L	"							"	"	"			
		"	75	B				A	B	H	"							"	"	"			
		"	76	A							"	L	B	A				"	"	"			
		"	77	A							"	H	A	B				"	"	"			
		"	78	B							"	L	A	B				"	"	"			
		"	79	B							"	H	B	A				"	"	"			
		"	80	A							"				L	B	A	"	"	"			
		"	81	A							"				H	A	B	"	"	"			
		"	82	B							"				L	A	B	"	"	"			
		"	83	B							"				H	B	A	"	"	"			
8	Same tests, terminal conditions, and limits as for subgroup 7, except T_C = +125°C and -55°C.																						

See footnotes at end of device type 06.

TABLE III. Group A inspection for device type 06 - Continued.
Terminal conditions (pins not designated may be H ≥2.0 V, or L ≤0.8 V, or open)

Subgroup	Symbol	MIL-STD-883 method	Cases E,F, X,2 7/	1	2	3	4	5	6	7	8	9	10	11	12	13	14	15	16	Measured terminal	Test limits Min	Test limits Max	Unit
				2	3	4	5	7	8	9	10	12	13	14	15	17	18	19	20				
			Test no.	S	1A	1B	1Y	2A	2B	2Y	GND	3Y	3B	3A	4Y	4B	4A	OE	V_{CC}				
9 T_C = +25°C	t_{PHL1}	3003 Fig. 10	84	IN	GND	2.7 V	OUT	GND	2.7 V	OUT	GND							GND	5.0 V	1Y	2.0	17	ns
		"	85	"							"							"	"	2Y	"	"	"
		"	86	"							"	OUT	2.7 V	GND				"	"	3Y	"	"	"
		"	87	"							"				OUT	2.7 V	GND	"	"	4Y	"	"	"
	t_{PLH1}	"	88	IN	GND	2.7 V	OUT	GND	2.7 V	OUT	"							"	"	1Y	"	"	"
		"	89	"							"							"	"	2Y	"	"	"
		"	90	"							"	OUT	2.7 V	GND				"	"	3Y	"	"	"
		"	91	"							"				OUT	2.7 V	GND	"	"	4Y	"	"	"
	t_{PHL2}	"	92	GND	IN	GND	OUT	IN	GND	OUT	"							"	"	1Y	"	8.0	"
		"	93	"							"							"	"	2Y	"	"	"
		"	94	"							"	OUT	GND	IN				"	"	3Y	"	"	"
		"	95	"							"				OUT	GND	IN	"	"	4Y	"	"	"
	t_{PLH2}	"	96	"	IN	GND	OUT	IN	GND	OUT	"							"	"	1Y	"	9.0	"
		"	97	"							"							"	"	2Y	"	"	"
		"	98	"							"	OUT	GND	IN				"	"	3Y	"	"	"
		"	99	"							"				OUT	GND	IN	"	"	4Y	"	"	"
	t_{ZH}	"	100	2.7 V		2.7 V	OUT		2.7 V	OUT	"							IN	"	1Y	"	21.5	"
		"	101	"							"							"	"	2Y	"	"	"
		"	102	"							"	OUT	2.7 V					"	"	3Y	"	"	"
		"	103	"							"				OUT	2.7 V		"	"	4Y	"	"	"
	t_{ZL}	"	104	GND	GND		OUT	GND		OUT	"							"	"	1Y	"	23	"
		"	105	"							"							"	"	2Y	"	"	"
		"	106	"							"	OUT		GND				"	"	3Y	"	"	"
		"	107	"							"				OUT		GND	"	"	4Y	"	"	"
	t_{HZ} 5/	"	108	2.7 V		2.7 V	OUT		2.7 V	OUT	"							"	"	1Y	"	11.5	"
		"	109	"							"							"	"	2Y	"	"	"
		"	110	"							"	OUT	2.7 V					"	"	3Y	"	"	"
		"	111	"							"				OUT	2.7 V		"	"	4Y	"	"	"
	t_{LZ}	"	112	GND	GND		OUT	GND		OUT	"							"	"	1Y	"	17	"
		"	113	"							"							"	"	2Y	"	"	"
		"	114	"							"	OUT		GND				"	"	3Y	"	"	"
		"	115	"							"				OUT		GND	"	"	4Y	"	"	"
10 T_C = +125°C	t_{PHL1}	"	116	IN	GND	2.7 V	OUT	GND	2.7 V	OUT	"							GND	"	1Y	"	22	"
		"	117	"							"							"	"	2Y	"	"	"
		"	118	"							"	OUT	2.7 V	GND				"	"	3Y	"	"	"
		"	119	"							"				OUT	2.7 V	GND	"	"	4Y	"	"	"
	t_{PLH1}	"	120	"	GND	2.7 V	OUT	GND	2.7 V	OUT	"							"	"	1Y	"	"	"
		"	121	"							"							"	"	2Y	"	"	"
		"	122	"							"	OUT	2.7 V	GND				"	"	3Y	"	"	"
		"	123	"							"				OUT	2.7 V	GND	"	"	4Y	"	"	"

See footnotes at end of device type 06.

TABLE III. Group A inspection for device type 06 - Continued.
Terminal conditions (pins not designated may be H ≥2.0 V, or L ≤0.8 V, or open)

Subgroup	Symbol	MIL-STD-883 method	Cases E,F, X,2 7/	1	2	3	4	5	6	7	8	9	10	11	12	13	14	15	16	Measured terminal	Test limits Min	Test limits Max	Unit
				2	3	4	5	7	8	9	10	12	13	14	15	17	18	19	20				
			Test no.	S	1A	1B	1Y	2A	2B	2Y	GND	3Y	3B	3A	4Y	4B	4A	OE	V_{CC}				
10 T_C = +125°C	t_{PHL2}	3003 Fig. 10	124	GND	IN	GND	OUT	IN	GND	OUT	GND							GND	5.0 V	1Y	2.0	11	ns
		"	125	"							"							"	"	2Y	"	"	"
		"	126	"							"	OUT	GND	IN				"	"	3Y	"	"	"
		"	127	"							"				OUT	GND	IN	"	"	4Y	"	"	"
	t_{PLH2}	"	128	"	IN	GND	OUT	IN	GND	OUT	"							"	"	1Y	"	12	"
		"	129	"							"							"	"	2Y	"	"	"
		"	130	"							"	OUT	GND	IN				"	"	3Y	"	"	"
		"	131	"							"				OUT	GND	IN	"	"	4Y	"	"	"
	t_{ZH}	"	132	2.7 V		2.7 V	OUT		2.7 V	OUT	"							IN	"	1Y	"	28	"
		"	133	"							"							"	"	2Y	"	"	"
		"	134	"							"	OUT	2.7 V					"	"	3Y	"	"	"
		"	135	"							"				OUT	2.7 V		"	"	4Y	"	"	"
	t_{ZL}	"	136	GND	GND		OUT	GND		OUT	"							"	"	1Y	"	30	"
		"	137	"							"							"	"	2Y	"	"	"
		"	138	"							"	OUT		GND				"	"	3Y	"	"	"
		"	139	"							"				OUT		GND	"	"	4Y	"	"	"
	t_{HZ} 6/	"	140	2.7 V		2.7 V	OUT		2.7 V	OUT	"							"	"	1Y	"	15	"
		"	141	"							"							"	"	2Y	"	"	"
		"	142	"							"	OUT	2.7 V					"	"	3Y	"	"	"
		"	143	"							"				OUT	2.7 V		GND	"	4Y	"	"	"
	t_{LZ}	"	144	GND	GND		OUT	GND		OUT	"							"	"	1Y	"	22	"
		"	145	"							"							"	"	2Y	"	"	"
		"	146	"							"	OUT		GND				"	"	3Y	"	"	"
		"	147	"							"				OUT		GND	"	"	4Y	"	"	"
11	Same tests, terminal conditions, and limits as for subgroup 10, except T_C = -55°C.																						

1/ For circuit 8, $I_{OS(max)}$ = -110 mA.

2/ A = 2.4 V; B = 0.4 V.

3/ H ≥ 1.5 V; L ≤ 1.5 V.

4/ Only a summary of attributes is required.

5/ t_{HZ} maximum limit for circuit C is 22 ns.

6/ t_{HZ} maximum limit for circuit C is 24 ns.

7/ Case 2 pins not designated are NC.

TABLE III. Group A inspection for device type 07.
Terminal conditions (pins not designated may be H ≥2.0 V, or L ≤0.8 V, or open)

Subgroup	Symbol	MIL-STD-883 method	Cases E,F, X,2 7/	1	2	3	4	5	6	7	8	9	10	11	12	13	14	15	16	Measured terminal	Test limits Min	Test limits Max	Unit
				2	3	4	5	7	8	9	10	12	13	14	15	17	18	19	20				
			Test no.	S	1A	1B	1Y	2A	2B	2Y	GND	3Y	3B	3A	4Y	4B	4A	OE	V_{CC}				
T_C [1] = +25°C	V_{OH}	3006	1	2.0 V		0.8 V	-2.0 mA		0.8 V	-2.0 mA	GND	-2.0 mA	0.8 V		-2.0 mA	0.8 V		0.8 V	4.5 V	1Y	2.4		V
		"	2	"							"							"	"	2Y	"		"
		"	3	"							"							"	"	3Y	"		"
		"	4	"							"							"	"	4Y	"		"
	V_{OL}	3007	5	0.8 V	2.0 V		20 mA	2.0 V		20 mA	"	20 mA		2.0 V	20 mA		2.0 V	"	"	1Y		0.5	"
		"	6	"							"							"	"	2Y		"	"
		"	7	"							"							"	"	3Y		"	"
		"	8	"							"							"	"	4Y		"	"
	I_{OFF1}		9	GND	5.5 V		2.7 V	5.5 V		2.7 V	"	2.7 V		5.5 V	2.7 V		5.5 V	2.0 V	5.5 V	1Y		50	μA
			10	"							"							"	"	2Y		"	"
			11	"							"							"	"	3Y		"	"
			12	"							"							"	"	4Y		"	"
	I_{OFF2}		13	5.5 V		GND	0.5 V		GND	0.5 V	"	0.5 V	GND		0.5 V	GND		"	"	1Y		-50	"
			14	"							"							"	"	2Y		"	"
			15	"							"							"	"	3Y		"	"
			16	"							"							"	"	4Y		"	"
	I_{CEX}		17	5.5 V		GND	5.5 V		GND	5.5 V	"	5.5 V	GND		5.5 V	GND		GND	"	1Y		250	"
			18	"							"							"	"	2Y		"	"
			19	"							"							"	"	3Y		"	"
			20	"							"							"	"	4Y		"	"
	I_{IL}	3009	21	0.5 V	0.5 V	0.5 V		0.5 V	0.5 V		"		0.5 V	0.5 V		0.5 V	0.5 V	0.5 V	"	S	-2.0	-4.0	mA
		"	22	GND							"								"	OE	-1.0	-2.0	"
		"	23	GND							"								"	1A	"	"	"
		"	24	5.5 V							"								"	1B	"	"	"
		"	25	GND							"								"	2A	"	"	"
		"	26	5.5 V							"								"	2B	"	"	"
		"	27	5.5 V							"								"	3B	"	"	"
		"	28	GND							"								"	3A	"	"	"
		"	29	5.5 V							"								"	4B	"	"	"
		"	30	GND							"								"	4A	"	"	"
	I_{IH1}	3010	31	2.7 V	2.7 V	2.7 V		2.7 V	2.7 V		"		2.7 V	2.7 V		2.7 V	2.7 V	2.7 V	"	S		100	μA
		"	32	5.5 V							"								"	OE		50	"
		"	33	5.5 V							"								"	1A		"	"
		"	34	GND							"								"	1B		"	"
		"	35	5.5 V							"								"	2A		"	"
		"	36	GND							"								"	2B		"	"
		"	37	GND							"								"	3B		"	"
		"	38	5.5 V							"								"	3A		"	"
		"	39	GND							"								"	4B		"	"
		"	40	5.5 V							"								"	4A		"	"
	I_{IH2}	"	41	"	5.5 V	5.5 V		5.5 V	5.5 V		"		5.5 V	5.5 V		5.5 V	5.5 V	5.5 V	"	S		1.0	mA
		"	42	"							"								"	OE		"	"
		"	43	"							"								"	1A		"	"
		"	44	GND							"								"	1B		"	"
		"	45	5.5 V							"								"	2A		"	"
		"	46	GND							"								"	2B		"	"
		"	47	GND							"								"	3B		"	"
		"	48	5.5 V							"								"	3A		"	"
		"	49	GND							"								"	4B		"	"
		"	50	5.5 V							"								"	4A		"	"

See footnotes at end of device type 07.

TABLE III. Group A inspection for device type 07 - Continued.
Terminal conditions (pins not designated may be H ≥2.0 V, or L ≤0.8 V, or open)

Subgroup	Symbol	MIL-STD-883 method	Cases E,F, X,2 7/	1	2	3	4	5	6	7	8	9	10	11	12	13	14	15	16	Measured terminal	Test limits Min	Test limits Max	Unit
				2	3	4	5	7	8	9	10	12	13	14	15	17	18	19	20				
			Test no.	S	1A	1B	1Y	2A	2B	2Y	GND	3Y	3B	3A	4Y	4B	4A	3E	V_{CC}				
1 T_C = +25°C	I_{OS}	3011 " " "	51 52 53 54	5.5 V " " "		GND	GND		GND	GND	GND " " "	GND	GND		GND	GND		GND " " "	5.5 V " " "	1Y 2Y 3Y 4Y	-40 " " "	-100 1/ " " "	mA " " "
	I_{CCH}	3005	55	GND	GND	GND		GND	GND		"		GND	GND		GND	GND	"	"	V_{CC}		56	"
	I_{CCL}	"	56	5.5 V	GND	5.5 V		GND	5.5 V		"		5.5 V	GND		5.5 V	GND	"	"	V_{CC}		81	"
	I_{CCO}	"	57	GND	GND	GND		GND	GND		"		GND	GND		GND	GND	5.5 V	"	V_{CC}		87	"
	V_{IC}		58 59 60 61 62 63 64 65 66 67	-18 mA	-18 mA	-18 mA		-18 mA	-18 mA		" " " " " " " " " "		-18 mA	-18 mA		-18 mA	-18 mA	-18 mA	4.5 V " " " " " " " " "	S 1A 1B 2A 2B 3B 3A 4B 4A 3E		-1.2 " " " " " " " " "	V " " " " " " " " "
2	Same tests, terminal conditions, and limits as for subgroup 1, except T_C = +125°C and V_{IC} tests are omitted. V_{IL} = 0.7 V, $V_{OL(max)}$ = 0.45 V.																						
3	Same tests, terminal conditions, and limits as for subgroup 1, except T_C = -55°C and V_{IC} tests are omitted.																						
7 4/ T_C = +25°C	Truth table test	3014 " " " " " " " " " " " " " " " "	68 69 70 71 72 73 74 75 76 77 78 79 80 81 82 83	A 2/ A B B A A B B A A B B A A B B	A 2/ B B A	B 2/ A A B	H L H L	A B B A	B A A B	H L H L	GND " " " " " " " " " " " " " " " "	H L H L	B A A B	A B B A	H L H L	B A A B	A B B A	B 2/ " " " " " " " " " " " " " " " "	4.5 V " " " " " " " " " " " " " " "	See 3/ " " " " " " " " " " " " " " "			
8 4/	Same tests, terminal conditions, and limits as for subgroup 7, except T_C = +125°C and -55°C.																						
9 T_C = +25°C	t_{PHL1}	3003 Fig. 11 " "	84 85 86 87	IN " " "	GND	2.7 V	OUT	GND	2.7 V	OUT	GND " " "	OUT	2.7 V	GND	OUT	2.7 V	GND	GND " " "	5.0 V " " "	1Y 2Y 3Y 4Y	2.0 " " "	14 " " "	ns " " "
	t_{PLH1}	" " " "	88 89 90 91	" " " "	GND	2.7 V	OUT	GND	2.7 V	OUT	" " " "	OUT	2.7 V	GND	OUT	2.7 V	GND	" " " "	" " " "	1Y 2Y 3Y 4Y	" " " "	" " " "	" " " "

See footnotes at end of device type 07.

TABLE III. Group A inspection for device type 07 - Continued.
Terminal conditions (pins not designated may be H ≥2.0 V, or L ≤0.8 V, or open)

Subgroup	Symbol	MIL-STD-883 method	Cases E,F, X,2 7/	1	2	3	4	5	6	7	8	9	10	11	12	13	14	15	16	Measured terminal	Test limits Min	Test limits Max	Unit
				2	3	4	5	7	8	9	10	12	13	14	15	17	18	19	20				
			Test no.	S	1A	1B	1Y	2A	2B	2Y	GND	3Y	3B	3A	4Y	4B	4A	OE	V_{CC}				
9 T_C = +25°C	t_{PHL2}	3003 Fig. 11	92	GND	IN	GND	OUT	IN	GND	OUT	GND	OUT	GND	IN	OUT	GND	IN	GND	5.0 V	1Y	2.0	8.0	ns
		"	93	"							"							"	"	2Y	"	"	"
		"	94	"							"							"	"	3Y	"	"	"
		"	95	"							"							"	"	4Y	"	"	"
	t_{PLH2}	"	96	"	IN	GND	OUT	IN	GND	OUT	"	OUT	GND	IN	OUT	GND	IN	"	"	1Y	"	"	"
		"	97	"							"							"	"	2Y	"	"	"
		"	98	"							"							"	"	3Y	"	"	"
		"	99	"							"							"	"	4Y	"	"	"
	t_{ZH}	"	100	2.7 V		GND	OUT		GND	OUT	"	OUT	GND		OUT	GND		IN	"	1Y	"	21.5	"
		"	101	"							"							"	"	2Y	"	"	"
		"	102	"							"							"	"	3Y	"	"	"
		"	103	"							"							"	"	4Y	"	"	"
	t_{ZL}	"	104	GND	2.7 V		OUT	2.7 V		OUT	"	OUT		2.7 V	OUT		2.7 V	"	"	1Y	"	23	"
		"	105	"							"							"	"	2Y	"	"	"
		"	106	"							"							"	"	3Y	"	"	"
		"	107	"							"							"	"	4Y	"	"	"
	t_{HZ} 5/	"	108	2.7 V		GND	OUT		GND	OUT	"	OUT	GND		OUT	GND		"	"	1Y	"	11.5	"
		"	109	"							"							"	"	2Y	"	"	"
		"	110	"							"							"	"	3Y	"	"	"
		"	111	"							"							"	"	4Y	"	"	"
	t_{LZ}	"	112	GND	2.7 V		OUT	2.7 V		OUT	"	OUT		2.7 V	OUT		2.7 V	"	"	1Y	"	17	"
		"	113	"							"							"	"	2Y	"	"	"
		"	114	"							"							"	"	3Y	"	"	"
		"	115	"							"							"	"	4Y	"	"	"
10 T_C = +125°C	t_{PHL1}	"	116	IN	GND	2.7 V	OUT	GND	2.7 V	OUT	"	OUT	2.7 V	GND	OUT	2.7 V	GND	GND	"	1Y	"	18.5	"
		"	117	"							"							"	"	2Y	"	"	"
		"	118	"							"							"	"	3Y	"	"	"
		"	119	"							"							"	"	4Y	"	"	"
	t_{PLH1}	"	120	"	GND	2.7 V	OUT	GND	2.7 V	OUT	"	OUT	2.7 V	GND	OUT	2.7 V	GND	"	"	1Y	"	"	"
		"	121	"							"							"	"	2Y	"	"	"
		"	122	"							"							"	"	3Y	"	"	"
		"	123	"							"							"	"	4Y	"	"	"
	t_{PHL2}	"	124	GND	IN	GND	OUT	IN	GND	OUT	"	OUT	GND	IN	OUT	GND	IN	"	"	1Y	"	10	"
		"	125	"							"							"	"	2Y	"	"	"
		"	126	"							"							"	"	3Y	"	"	"
		"	127	"							"							"	"	4Y	"	"	"
	t_{PLH2}	"	128	"	IN	GND	OUT	IN	GND	OUT	"	OUT	GND	IN	OUT	GND	IN	"	"	1Y	"	"	"
		"	129	"							"							"	"	2Y	"	"	"
		"	130	"							"							"	"	3Y	"	"	"
		"	131	"							"							"	"	4Y	"	"	"
	t_{ZH}	"	132	2.7 V		GND	OUT		GND		"	OUT	GND		OUT	GND		IN	"	1Y	"	28	"
		"	133	"							"							"	"	2Y	"	"	"
		"	134	"							"							"	"	3Y	"	"	"
		"	135	"							"							"	"	4Y	"	"	"

See footnotes at end of device type 07.

TABLE III. Group A inspection for device type 07 - Continued.
Terminal conditions (pins not designated may be H ≥2.0 V, or L ≤0.8 V, or open)

Subgroup	Symbol	MIL-STD-883 method	Cases E,F, X,2 7/	1	2	3	4	5	6	7	8	9	10	11	12	13	14	15	16	Measured terminal	Test limits Min	Test limits Max	Unit
				2	3	4	5	7	8	9	10	12	13	14	15	17	18	19	20				
			Test no.	3	1A	1B	1Y	2A	2B	2Y	GND	3Y	3B	3A	4Y	4B	4A	OE	V_{CC}				
10 T_C = +125°C	t_{ZL}	3003 Fig. 11	136	GND	2.7 V		OUT			OUT	GND							IN	5.0 V	1Y	2.0	30	ns
		"	137	"				2.7 V			"							"	"	2Y	"	"	"
		"	138	"							"	OUT		2.7 V				"	"	3Y	"	"	"
		"	139	"							"				OUT		2.7 V	"	"	4Y	"	"	"
	t_{HZ} 6/	"	140	2.7 V		GND	OUT				"							"	"	1Y	"	15	"
		"	141	"					GND	OUT	"							"	"	2Y	"	"	"
		"	142	"							"	OUT	GND					"	"	3Y	"	"	"
		"	143	"							"				OUT	GND		"	"	4Y	"	"	"
	t_{LZ}	"	144	GND	2.7 V		OUT				"							"	"	1Y	"	22	"
		"	145	"				2.7 V		OUT	"							"	"	2Y	"	"	"
		"	146	"							"	OUT		2.7 V				"	"	3Y	"	"	"
		"	147	"							"				OUT		2.7 V	"	"	4Y	"	"	"
11	Same tests, terminal conditions, and limits as for subgroup 10, except T_C = -55°C.																						

1/ For circuit B, $I_{OS(max)}$ = -110 mA.

2/ A = 2.4 V; B = 0.4 V.

3/ H ≥ 1.5 V; L ≤ 1.5 V.

4/ Only a summary of attributes is required.

5/ t_{HZ} maximum limit for circuit C is 22 ns.

6/ t_{HZ} maximum limit for circuit C is 24 ns.

7/ Case 2 pins not designated are NC.

TABLE III. Group A inspection device type 08.
Terminal conditions (pins not designated may be H ≥2.0 V, or L ≤0.8 V, or open)

Subgroup	Symbol	MIL-STD-883 method	Cases E,F, X,2 5/	1	2	3	4	5	6	7	8	9	10	11	12	13	14	15	16	Measured terminal	Test limits Min	Test limits Max	Unit
				2	3	4	5	7	8	9	10	12	13	14	15	17	18	19	20				
			Test no.	1G	B	1C3	1C2	1C1	1C0	1Y	GND	2Y	2C0	2C1	2C2	2C3	A	2G	V_{CC}				
T_C = +25°C [1]	V_{OH}	3006	1	0.8 V	0.8 V				2.0 V	-1 mA	GND						0.8 V		4.5 V	1Y	2.4		V
		3006	2		"						"	-1 mA	2.0 V				"	0.8 V	"	2Y	2.4		"
	V_{OL}	3007	3	0.8 V	"				0.8 V	20 mA	"						"		"	1Y		0.5	"
		3007	4		"						"	20 mA	0.8 V				"	0.8 V	"	2Y		0.5	"
	I_{OFF1}		5	2.0 V						2.7 V	"								5.5 V	1Y		50	μA
			6								"	2.7 V						2.0 V		2Y		50	"
	I_{OFF2}		7	2.0 V						0.5 V	"								"	1Y		-50	"
			8								"	0.5 V						2.0 V	"	2Y		-50	"
	V_{IC}		9								"						-18 mA		4.5 V	A		-1.2	V
			10		-13 mA						"								"	B		"	"
			11						-18 mA		"								"	1C0		"	"
			12					-18 mA			"								"	1C1		"	"
			13				-18 mA				"								"	1C2		"	"
			14			-18 mA					"								"	1C3		"	"
			15	-18 mA							"								"	1G		"	"
			16								"		-18 mA						"	2C0		"	"
			17								"			-18 mA					"	2C1		"	"
			18								"				-18 mA				"	2C2		"	"
			19								"					-18 mA			"	2C3		"	"
			20								"							-18 mA	"	2G		"	"
	I_{IL}	3009	21								"						0.5 V		5.5 V	A	-1.0	-2.0	mA
		"	22		0.5 V						"								"	B	"	"	"
		"	23	0.5 V							"								"	1G	"	"	"
		"	24								"							0.5 V	"	2G	"	"	"
		"	25	GND	GND				0.5 V		"						GND		"	1C0	"	"	"
		"	26	"	GND			0.5 V			"						5.5 V		"	1C1	"	"	"
		"	27	"	5.5 V		0.5 V				"						GND		"	1C2	"	"	"
		"	28	"	5.5 V	0.5 V					"						5.5 V		"	1C3	"	"	"
		"	29		GND						"		0.5 V				GND	GND	"	2C0	"	"	"
		"	30		GND						"			0.5 V			5.5 V	"	"	2C1	"	"	"
		"	31		5.5 V						"				0.5 V		GND	"	"	2C2	"	"	"
		"	32		5.5 V						"					0.5 V	5.5 V	"	"	2C3	"	"	"
	I_{IH1}	3010	33								"						2.7 V		"	A		50	μA
		"	34		2.7 V						"								"	B		"	"
		"	35	2.7 V							"								"	1G		"	"
		"	36								"							2.7 V	"	2G		"	"
		"	37	5.5 V	5.5 V				2.7 V		"						5.5 V		"	1C0		"	"
		"	38	"	5.5 V			2.7 V			"						GND		"	1C1		"	"
		"	39	"	GND		2.7 V				"						5.5 V		"	1C2		"	"
		"	40	"	GND	2.7 V					"						GND		"	1C3		"	"
		"	41		5.5 V						"		2.7 V				5.5 V	5.5 V	"	2C0		"	"
		"	42		5.5 V						"			2.7 V			GND	"	"	2C1		"	"
		"	43		GND						"				2.7 V		5.5 V	"	"	2C2		"	"
		"	44		GND						"					2.7 V	GND	"	"	2C3	"	"	"
	I_{IH2}	"	45								"						5.5 V		"	A		1.0	mA
		"	46		5.5 V						"								"	B		"	"
		"	47	5.5 V							"								"	1G		"	"
		"	48								"							5.5 V	"	2G		"	"
		"	49	5.5 V	5.5 V				5.5 V		"						5.5 V		"	1C0		"	"
		"	50	"	5.5 V			5.5 V			"						GND		"	1C1		"	"
		"	51	"	GND		5.5 V				"						5.5 V		"	1C2		"	"
		"	52	"	GND	5.5 V					"						GND		"	1C3		"	"
		"	53		5.5 V						"		5.5 V				5.5 V	5.5 V	"	2C0		"	"

See footnotes at end of device type 08.

TABLE III. Group A inspection for device type 08 - Continued.
Terminal conditions (pins not designated may be H ≥2.0 V, or L ≤0.8 V, or open)

Subgroup	Symbol	MIL-STD-883 method	Cases E,F, X,2 5/	1	2	3	4	5	6	7	8	9	10	11	12	13	14	15	16	Measured terminal	Test limits Min	Test limits Max	Unit
			Test no.	1G	B	1C3	1C2	1C1	1C0	1Y	GND	2Y	2C0	2C1	2C2	2C3	A	2G	V_{CC}				
1 T_C = +25°C	I_{IH2}	3010	54		5.5 V						GND			5.5 V			GND	5.5 V	5.5 V	2C1		1.0	mA
		"	55		GND						"				5.5 V		5.5 V	"	"	2C2		"	"
		"	56		"						"					5.5 V	GND	"	"	2C3		"	"
	I_{OS}	3011	57	GND	"				5.5 V	GND	"						"	GND	"	1Y	-40	-100 4/	"
		"	58	GND	"						"	GND	5.5 V				"	GND	"	2Y	-40	-100 4/	"
	I_{CC0}	3005	59	5.5 V	"	GND	GND	GND	GND		"		GND	GND	GND	GND	"	5.5 V	"	V_{CC}		100	"
	I_{CC1}	3005	60	GND	"	GND	GND	GND	GND		"		GND	GND	GND	GND	"	GND	"	V_{CC}		80	"
	I_{CEX}		61	GND	"				5.5 V	5.5 V	"						"		"	1Y		250	μA
			62		"						"	5.5 V	5.5 V				"	GND	"	2Y		250	"
2	Same tests, terminal conditions, and limits as for subgroup 1, except T_C = +125°C and V_{IC} tests are omitted. V_{IL} = 0.7 V, $V_{OL(max)}$ = 0.45 V.																						
3	Same tests, terminal conditions, and limits as for subgroup 1, except T_C = -55°C and V_{IC} tests are omitted.																						
7 3/ T_C = +25°C	Truth table test	3014	63	B 1/	B 1/	A 1/	A 1/	A 1/	B 1/	L	"	L	B 1/	A 1/	A 1/	A 1/	B	B 1/	4.5 V	See 2/			
		"	64	"	"	B	B	B	A	H	"	H	A	B	B	B	B	"	"	"			
		"	65	"	"	A	A	B	"	L	"	L	A	B	A	A	A	"	"	"			
		"	66	"	"	B	B	A	"	H	"	H	B	A	B	B	A	"	"	"			
		"	67	"	A	A	B	A	"	L	"	L	A	A	B	A	B	"	"	"			
		"	68	"	"	B	A	B	B	H	"	H	B	B	A	B	B	"	"	"			
		"	69	"	"	B	A	A	A	L	"	L	A	A	A	B	A	"	"	"			
		"	70	"	"	A	B	B	B	H	"	H	B	B	B	A	A	"	"	"			
8	Same tests, terminal conditions, and limits as for subgroup 7, except T_C = +125°C and T_C = -55°C.																						
9 T_C = +25°C	t_{PHL1}	3003 Fig. 12	71	GND	GND				IN	OUT	GND						GND		5.0 V	1Y	2.0	11.0	ns
		"	72	"	GND			IN		"	"						2.7 V		"	"	"	"	"
		"	73	"	2.7 V		IN			"	"						GND		"	"	"	"	"
		"	74	"	2.7 V	IN				"	"						2.7 V		"	"	"	"	"
		"	75		GND						"	OUT	IN				GND	GND	"	2Y	"	"	"
		"	76		GND						"	"		IN			2.7 V	"	"	"	"	"	"
		"	77		2.7 V						"	"			IN		GND	"	"	"	"	"	"
		"	78		2.7 V						"	"				IN	2.7 V	"	"	"	"	"	"
	t_{PLH1}	"	79	GND	GND				IN	OUT	"						GND		"	1Y	"	"	"
		"	80	"	GND			IN		"	"						2.7 V		"	"	"	"	"
		"	81	"	2.7 V		IN			"	"						GND		"	"	"	"	"
		"	82	"	2.7 V	IN				"	"						2.7 V		"	"	"	"	"
		"	83		GND						"	OUT	IN				GND	GND	"	2Y	"	"	"
		"	84		GND						"	"		IN			2.7 V	"	"	"	"	"	"
		"	85		2.7 V						"	"			IN		GND	"	"	"	"	"	"
		"	86		2.7 V						"	"				IN	2.7 V	"	"	"	"	"	"
	t_{PHL2}	"	87	GND	GND			GND	2.7 V	OUT	"						IN		"	1Y	"	20	"
		"	88	GND	IN		GND		2.7 V	OUT	"						GND		"	1Y	"	"	"
		"	89		GND						"	OUT	2.7 V	GND			IN	GND	"	2Y	"	"	"
		"	90		IN						"	OUT	2.7 V		GND		GND	GND	"	2Y	"	"	"

See footnotes at end of device type 08.

TABLE III. Group A inspection for device type 08 - Continued.
Terminal conditions (pins not designated may be H ≥2.0 V, or L ≤0.8 V, or open)

Subgroup	Symbol	MIL-STD-883 method	Cases E,F, X,2 5/	1	2	3	4	5	6	7	8	9	10	11	12	13	14	15	16	Measured terminal	Test limits Min	Test limits Max	Unit
				2	3	4	5	7	8	9	10	12	13	14	15	17	18	19	20				
			Test no.	1G	B	1C3	1C2	1C1	1C0	1Y	GND	2Y	2C0	2C1	2C2	2C3	A	2G	V_{CC}				
9 T_C = +25°C	t_{PLH2}	3003 Fig. 12	91	GND	GND		GND	GND	2.7 V	OUT	GND						IN		5.0 V	1Y	2.0	20	ns
		"	92	GND	IN				2.7 V	OUT	"						GND		"	1Y	"	"	"
		"	93		GND						"	OUT	2.7 V	GND			IN	GND	"	2Y	"	"	"
			94		IN						"	OUT	2.7 V		GND		GND	GND	"	2Y	"	"	"
	t_{ZH}	"	95	IN	GND				2.7 V	OUT	"						"		"	1Y	"	23	"
		"	96	"	"						"	OUT	2.7 V				"	IN	"	2Y	"	23	"
	t_{ZL}	"	97	"	"				GND	OUT	"						"		"	1Y	"	24	"
		"	98	"	"						"	OUT	GND				"	IN	"	2Y	"	24	"
	t_{HZ}	"	99	"	"				2.7 V	OUT	"						"		"	1Y	"	13.5	"
		"	100	"	"						"	OUT	2.7 V				"	IN	"	2Y	"	13.5	"
	t_{LZ}	"	101	"	"				GND	OUT	"						"		"	1Y	"	15.5	"
		"	102	"	"						"	OUT	GND				"	IN	"	2Y	"	15.5	"
10 T_C = +125°C	Same tests and terminal conditions as subgroup 9, with limits as follows: t_{PHL1} = 14.5 ns, t_{PLH1} = 14.5 ns, t_{PHL2} = 26 ns, t_{PLH2} = 26 ns, t_{ZH} = 30 ns, t_{ZL} = 31 ns, t_{HZ} = 18 ns, t_{LZ} = 20 ns.																						
11	Same tests, terminal conditions, and limits as for subgroup 10, except T_C = -55°C.																						

1/ A = 2.4 V; B = 0.4 V.

2/ H ≥ 1.5 V; L ≤ 1.5 V.

3/ Only a summary of attributes is required.

4/ For circuit B, $I_{OS(max)}$ = -110 mA.

5/ Case 2 pins not designated are NC.

4. QUALITY ASSURANCE PROVISIONS

4.1 Sampling and inspection. Sampling and inspection procedures shall be in accordance with MIL-M-38510 and methods 5005 and 5007, as applicable, of MIL-STD-883, except as modified herein.

4.2 Screening. Screening shall be in accordance with method 5004 of MIL-STD-883, and shall be conducted on device type 01 prior to qualification and quality conformance inspection. The following additional criteria shall apply:

a. Burn-in test (method 1015 of MIL-STD-883).

(1) Test condition D, using the circuit shown on figure 3, or equivalent.

(2) T_A = +125°C minimum.

b. Interim and final electrical test parameters shall be as specified in table II, except interim electrical parameters test prior to burn-in is optional at the discretion of the manufacturer.

c. The percent defective allowable (PDA) shall be as specified in MIL-M-38510.

4.3 Qualification inspection. Qualification inspection shall be in accordance with MIL-M-38510. Inspections to be performed shall be those specified in method 5005 of MIL-STD-883 and herein for groups A, B, C, and D inspections (see 4.4.1 through 4.4.4).

4.4 Quality conformance inspection. Quality conformance inspection shall be in accordance with MIL-M-38510. Inspections to be performed shall be those specified in method 5005 of MIL-STD-883 and herein for groups A, B, C, and D inspections (see 4.4.1 through 4.4.4).

4.4.1 Group A inspection. Group A inspection shall be in accordance with table I of method 5005 of MIL-STD-883 and as follows:

a. Electrical tests requirements shall be as specified in table II.

b. Subgroups 4, 5, and 6 of table I of method 5005 of MIL-STD-883 shall be omitted.

4.4.2 Group B inspection. Group B inspection shall be in accordance with table II of method 5005 of MIL-STD-883. Electrical test requirements shall be as specified in table II herein.

4.4.3 Group C inspection. Group C inspection shall be in accordance with table III of method 5005 of MIL-STD-883 and as follows:

a. End-point electrical parameters shall be as specified in table II herein.

b. Steady-state life test (method 1005 of MIL-STD-883) conditions:

(1) Test condition D using the circuit shown on figure 3, or equivalent.

(2) T_A = +125°C, minimum.

(3) Test duration: 1,000 hours, except as permitted by method 1005 of MIL-STD-883.

4.4.4 Group D inspection. Group D inspection shall be in accordance with table IV of method 5005 of MIL-STD-883. End-point electrical parameters shall be as specified in table II herein.

4.5 Methods of inspection. Methods of inspection shall be specified as follows.

4.5.1 Voltage and current. All voltages given are referenced to the microcircuit ground terminal. Currents given are conventional and positive when flowing into the referenced terminal.

5. PACKAGING

5.1 Packaging requirements. The requirements for packaging shall be in accordance with MIL-M-38510.

6. NOTES

6.1 Intended use. Microcircuits conforming to this specification are intended for original equipment design applications and logistic support of existing equipment.

6.2 Ordering data. The acquisition document should specify the following:

a. Complete part number (see 1.2).

b. Requirements for delivery of one copy of the quality conformance inspection data pertinent to the device inspection lot to be supplied with each shipment by the device manufacturer, if applicable.

c. Requirements for certificate of compliance, if applicable.

d. Requirements for notification of change of product or process to the contracting activity in addition to notification to the qualifying activity, if applicable.

e. Requirements for failure analysis (including required test condition of method 5005 of MIL-STD-883), corrective action and reporting of results, if applicable.

f. Requirements for product assurance options.

g. Requirements for special carriers, lead lengths, or lead forming. If applicable, these requirements shall not affect the part number. Unless otherwise specified, these requirements shall not apply to direct purchase by or direct shipment to the Government.

h. Requirements for "JAN" marking.

6.3 Abbreviations, symbols, and definitions. The abbreviations, symbols, and definitions used herein are defined in MIL-M-38510, MIL-STD-1331, and as follows:

GND -	Ground zero voltage potential.
I_{IN} - - - - - - - - - - - - - - - - - - -	Current flowing into an input terminal.
V_{IN} - - - - - - - - - - - - - - - - - - -	Voltage level at an input terminal.
t_{ZH} - - - - - - - - - - - - - - - - - - -	Output enable time (of a three-state output) to high level. The time between the specified reference points on the input and output voltage waveforms with the three-state output changing from a high-impedance (off) state to the defined high level.
t_{ZL} - - - - - - - - - - - - - - - - - - -	Output enable time (of a three-state output) to low level. The time between the specified reference points on the input and output voltage waveforms with the three-state output changing from a high-impedance (off) state to the defined low level.

t_{HZ} - Output disable time (of a three-state output) from high level. The time between the specified reference points on the input and output voltage waveforms with the three-state output changing from the defined high level-impedance (off) state.

t_{LZ} - Output disable time (of a three-state output) from low level. The time between the specified reference points on the input and output voltage waveforms with the three-state output changing from the defined low level to a high-impedance (off) state.

6.4 Logistic support. Lead materials and finishes (see 3.3) are interchangeable. Unless otherwise specified, microcircuits acquired for Government logistic support will be acquired to device class B (see 1.2.2), lead material and finish C (see 3.3). Longer length leads and lead forming shall not affect the part number.

6.5 Substitutability. The cross-reference information below is presented for the convenience of users. Microcircuits covered by this specification will functionally replace the listed generic-industry type. Generic-industry microcircuit types may not have equivalent operational performance characteristics across military temperature ranges or reliability factors equivalent to MIL-M-38510 device types and may have slight physical variations in relation to case size. The presence of this information shall not be deemed as permitting substitution of generic-industry types for MIL-M-38510 types or as a waiver of any of the provisions of MIL-M-38510.

Military device type	Generic-industry type
01	54S151
02	54S153
03	54S157
04	54S158
05	54S251
06	54S257
07	54S258
08	54S253

6.6 Manufacturers' designation. Manufacturers' circuits included in this specification are designated with an "X" as shown in table IV herein.

TABLE IV. Manufacturers' designations.

Device type	Commercial type	Circuits				
		A	B	C	D	E
		Texas Instruments	Signetics Corp.	Advanced Micro Devices Inc.	Fairchild Semiconductor	National Semiconductor
01	54S151	X	X	X	X	X
02	54S153	X	X	X	X	X
03	54S157	X	X	X	X	X
04	54S158	X	X	X	X	X
05	54S251	X		X	X	
06	54S257	X		X	X	
07	54S258	X	X	X	X	
08	54S253			X	X	

6.7 Changes from previous issue. Asterisks are not used in this revision to identify changes with respect to the previous issue, due to the extensiveness of the changes.

Custodians:
Army - ER
Navy - EC
Air Force - 17

Review activities:
Army - AR, MI
Navy - OS, SH, TD
Air Force - 11, 19, 85, 99
DLA - ES

User activities:
Army - SM
Navy - AS, CG, MC

Preparing activity:
Air Force - 17

Agent:
DLA - ES

(Project 5962-1047)