MIL-M-38510/8D
28 JUNE 1985
SUPERSEDING
MIL-M-38510/8B
4 November 1974 and;
MIL-M-0038510/8C(19)
1 December 1975 and;
MIL-M-38510/8C
1 February 1985

MILITARY SPECIFICATION

MICROCIRCUITS, DIGITAL, TTL, BUFFERS/DRIVERS OPEN COLLECTOR OUTPUT, HIGH VOLTAGE, MONOLITHIC SILICON

This specification is approved for use by all Departments and Agencies of the Department of Defense.

1. SCOPE

1.1 Scope. This specification covers the detail requirements for monolithic silicon, TTL, buffers/drivers microcircuits with open collector high voltage outputs. Two product assurance classes and a choice of case outlines and lead finishes are provided and are reflected in the complete part number.

1.2 Part number. The part number shall be in accordance with MIL-M-38510.

1.2.1 Device type. The device type shall be as follows:

Device type	Circuit
01	Hex inverter buffer/driver, 30-volt output
02	Hex inverter buffer/driver, 15-volt output
03	Hex buffer/driver, 30-volt output
04	Hex buffer/driver, 15-volt output
05	Quad 2 input inverter buffer/driver, 15-volt output

1.2.2 Device class. Device class shall be the product assurance level as defined in MIL-M-38510.

1.2.3 Case outline. The case outline shall be designated as follows:

Outline letter	(see MIL-M-38510, appendex C) Case outline
A	F-1 (14-lead, 1/4" x 1/4") flat package
B	F-3 (14 lead, 3/16" x 1/4") flat package
C	D-1 (14-lead, 1/4" x 3/4") dual-in-line package
D	F-2 (14-lead, 1/4" x 3/8") flat package

1.3 Absolute maximum ratings.

Supply voltage range - - - - - - - - - - - -	-0.5 V dc to 7.0 V dc
Input voltage range - - - - - - - - - - - -	-1.5 V dc at -12 mA to 5.5 V dc
Storage temperature range - - - - - - - - -	-65°C to 150°C
Maximum power dissipation, P_D 1/- - - - -	54 mW dc per buffer

1/ Must withstand the added P_D due to short circuit condition (e.g., I_{OS}) at one output for 5 seconds duration.

Beneficial comments (recommendations, additions, deletions) and any pertinent data which may be of use in improving this document should be addressed to: Rome Air Development Center (RBE-2), Griffis AFB, NY 13441, by using the self-addressed Standardization Document Improvement Proposal (DD Form 1426) appearing at the end of this document or by letter.

FSC 5962

DISTRIBUTION STATEMENT A. Approved for public release; distribution is unlimited.

Lead temperature (soldering 10 seconds) - - - - - - - - - - - - - - 300°C
Thermal resistance, junction-to-case (θ_{JC}):
Cases A, B, C, D - - - - - - - - - - - - - (See MIL-M-38510 appendix C) 2/
Junction temperature (T_J) 3/ - - - - - - - - 175°C

1.4 Recommended operating conditions.

Supply voltage (V_{CC}) - - - - - - - - - - - - 4.5 V dc minimum to 5.5 V dc maximum
Minimum high level input voltage (V_{IH}) - 2.0 V dc
Maximum low level input voltage (V_{IL})- - 0.8 V dc
Normalized fanout (each output) 4/:
Device types 01, 02, 03, and 04- - - 18 maximum
Device type 05 - - - - - - - - - - - - - 10 maximum
Case operating temperature range (T_C)- - -55°C to 125°C

2. APPLICABLE DOCUMENTS

2.1 Government specifications and standards. Unless otherwise specified, the following specifications and standards, of the issue listed in that issue of the Department of Defense Index of Specifications and Standards specified in the solicitation, form a part of this specification to the extent specified herein.

SPECIFICATION

MILITARY

MIL-M-38510 - Microcircuits, General Specification for.

STANDARD

MILITARY

MIL-STD-883 - Test Methods and Procedures for Microelectronics.

(Copies of specifications, standards, handbooks, drawings, and publications required by manufacturers in connection with specific acquisition functions should be obtained from the contracting activity or as directed by the contracting officer.)

2.2 Order of precedence. In the event of a conflict between the text of this specification and the references cited herein, the text of this specification shall take precedence.

3. REQUIREMENTS

3.1 Detail specification. The individual item requirements shall be in accordance with MIL-M-38510, and as specified herein.

3.2 Design, construction, and physical dimensions. The design, construction, and physical dimensions shall be as specified in MIL-M-38510 and herein.

3.2.1 Logic diagram and terminal connections. The logic diagram and terminal connections shall be as specified on figure 1.

3.2.2 Truth table and logic equations. The truth table and logic equations shall be as specified on figure 2.

2/ When a thermal resistance value is included in MIL-M-38510, appendix C, it shall supersede the value stated herein.
3/ Maximum junction temperature shall not be exceeded except for allowable short duration burn-in screening conditions per method 5004 of MIL-STD-883.

4/ The device will fanout in both high and low levels to the specified number of inputs of the same device type as that being tested.

3.2.3 Schematic circuits. The schematic circuits shall be submitted to the preparing activity prior to inclusion of a manufacturer's device in this specification and shall be submitted to the qualifying activity and agent activity (DESC-ECS) as a prerequisite for qualification. All qualified manufacturers' schematics shall be maintained by the agent activity and will be available upon request.

3.2.4 Case outlines. The case outlines shall be as specified in 1.2.3.

3.3 Lead material and finish. Lead material and finish shall be in accordance with MIL-M-38510 (See 6.4).

3.4 Electrical performance characteristics. The electrical performance characteristics are as specified in table I, and apply over the full recommended case operating temperature range, unless otherwise specified.

TABLE I. Electrical performance characteristics.

Test	Symbol	Conditions $-55^\circ C \leq T_C \leq +125^\circ C$	Device types	Limits Min	Limits Max	Units
High-level output voltage	V_{OH}	1/	01,03	30		V
			02,04,05	15		V
Input clamp voltage	V_{IC}	V_{CC} = 4.5 V, I_{IN} = -12 mA T_A = 25°C	All		-1.5	V
Maximum collector cut-off current	I_{CEX}	V_{CC} = 4.5 V, V_{OH} = MAX 4/	01,02,03 04, 05		250	µA
Low-level output voltage	V_{OL1}	V_{CC} = 4.5 V, I_{OL} = 30 mA 4/	01, 02, 03, 04		0.7	V
Low-level output voltage	V_{OL2}	V_{CC} = 4.5 V, I_{OL} = 16 mA 4/	01,02,03, 04, 05		0.4	V
High-level input current	I_{IH1}	V_{CC} = 5.5 V, V_{IN} = 2.4 V 2/	All		40	µA
High-level input current	I_{IH2}	V_{CC} = 5.5 V, V_{IN} = 5.5 V 2/	All		100	µA
Low-level input current	I_{IL}	V_{CC} = 5.5 V, V_{IN} = 0.4 V 3/	01, 02 03, 04	-0.4	-1.6	mA
			05	-0.7	-1.6	mA
High-level supply current per buffer	I_{CCH}	V_{CC} = 5.5 V, V_{IN} = 0 V	01, 02		48	mA
		V_{CC} = 5.5 V, V_{IN} = 5.5 V	03, 04		46	mA
		V_{CC} = 5.5 V, V_{IN} = 0 V	05		8	mA
Low-level supply current per buffer	I_{CCL}	V_{CC} = 5.5 V, V_{IN} = 5.5 V	01, 02		51	mA
		V_{CC} = 5.5 V, V_{IN} = 0 V	03, 04		32	mA
		V_{CC} = 5.5 V, V_{IN} = 5.5 V	05		22	mA

See footnotes at end of table.

TABLE I. Electrical performance characteristics - Continued.

Test	Symbol	Conditions $-55°C \leq T_C \leq +125°C$	Device types	Limits Min	Limits Max	Units
Propagation delay time high-to-low- level	t_{PHL}	C_L = 50 pF ±10% minimum R_L = 150Ω ±5%	01, 02	3	30	ns
			03, 04	3	35	ns
		C_L = 50 pF ±10% minimum R_L = 1 kΩ ±5%	05	3	35	ns
Propagation delay time low-to-high level	t_{PLH}	C_L = 50 pF ±10% minimum R_L = 150Ω ±5%	01, 02	3	25	ns
			03, 04	3	20	ns
		C_L = 50 pF ±10% minimum R_L = 1 kΩ ±5%	05	3	40	ns

1/ See I_{CEX}.
2/ All unspecified inputs grounded.
3/ All unspecified inputs at 5.5 volts.
4/ V_{IL} = 0.7 V at 125°C only as follows:
I_{CEX}: device types 01, 02, 05.
V_{OL1}, V_{OL2}: device types 03 and 04.

3.5 Electrical test requirements. The electrical test requirements for each device class shall be the subgroups specified in table II. The electrical tests for each subgroup are described in table III.

TABLE II. Electrical test requirements.

MIL-STD-883 test requirements	Subgroups (see table III) Class S devices	Class B devices
Interim electrical parameters (pre burn-in) (method 5004)	1	1
Final electrical test parameters (method 5004)	1*, 2, 3, 9,10, 11	1*, 2, 3, 9
Group A test requirements (method 5005)	1, 2, 3, 9,10, 11	1, 2, 3, 9
Group B test requirements (method 5005) Subgroup 5	1, 2, 3 9,10,11	N/A
Group C end-point electrical parameters (method 5005)	N/A	1,2,3
Additional electrical subgroups for group C periodic inspections	N/A	10, 11
Group D end-point electrical parameters (method 5005)	1,2,3	1,2,3

*PDA applies to subgroup 1 (see 4.2c).

3.6 Marking. Marking shall be in accordance with MIL-M-38510.

3.7 Microcircuit group assignment. The devices covered by this specification shall be in microcircuit group number 2 (see MIL-M-38510, appendix E).

4. QUALITY ASSURANCE PROVISIONS

4.1 Sampling and inspection. Sampling and inspection procedures shall be in accordance with MIL-M-38510 and methods 5005 and 5007, as applicable, of MIL-STD-883, except as modified herein.

4.2 Screening. Screening shall be in accordance with method 5004 of MIL-STD-883, and shall be conducted on all devices prior to qualification and quality conformance inspection. The following additional criteria shall apply:

a. Burn-in (method 1015 of MIL-STD-883).

1. Test condition D or E, using the circuit shown on figure 3, or equivalent.

2. T_A = +125°C minimum.

b. Interim and final electrical test parameters shall be as specified in table II, except interim electrical parameters test prior to burn-in is optional at the discretion of the manufacturer.

c. The percent defective allowable (PDA) shall be as specified in MIL-M-38510.

4.3 Qualification inspection. Qualification inspection shall be in accordance with MIL-M-38510. Inspections to be performed shall be those specified in method 5005 of MIL-STD-883 and herein for groups A, B, C, and D inspections (see 4.4.1 through 4.4.4).

4.4 Quality conformance inspection. Quality conformance inspection shall be in accordance with MIL-M-38510, and as specified herein. Inspections to be performed shall be those specified in method 5005 of MIL-STD-883 and herein for groups A, B, C, and D inspections (see 4.4.1 through 4.4.4).

4.4.1 Group A inspection. Group A inspection shall be in accordance with table I of method 5005 of MIL-STD-883 and as follows:

a. Tests shall be as specified in table II .

b. Subgroups 4, 5, 6, 7, and 8 shall be ommitted.

4.4.2 Group B inspection. Group B inspection shall be in accordance with table II of method 5005 of MIL-STD-883. Electrical parameters shall be as specified in table II herein.

4.4.3 Group C inspection. Group C inspection shall be in accordance with table III of method 5005 of MIL-STD-883 and as follows:

a. End-point electrical parameters shall be as specified in table II herein.

b. Subgroups 3 and 4 shall be added to the group C inspection requirements for class B devices and shall consist of the tests, conditions, and limits specified for subgroups 10 and 11 of group A inspection.

c. Steady-State life test (method 1005 of MIL-STD-883) conditions:

1. Test condition D or E, using the circuit shown on figure 3, or equivalent.

2. T_A = 125°C, minimum.

3. Test duration: 1,000 hours, except as permitted by method 1005 of MIL-STD-883.

4.4.4 Group D inspection. Group D inspection shall be in accordance with table IV of method 5005 of MIL-STD-883. End-point electrical tests shall be as specified in table II herein.

Device types 01 and 02

Cases A, B and D

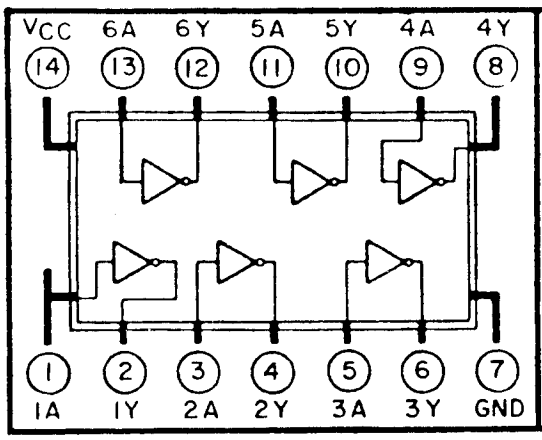

Case C

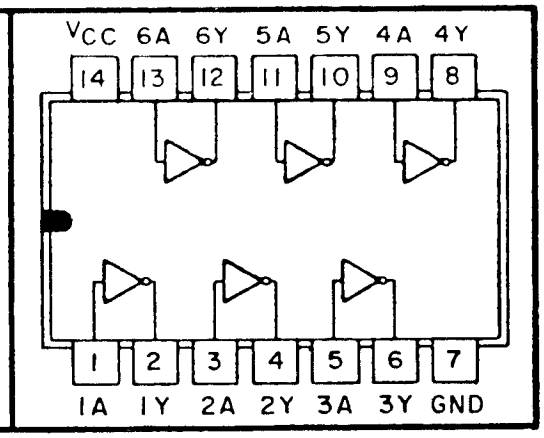

Device types 03 and 04

Cases A, B and D

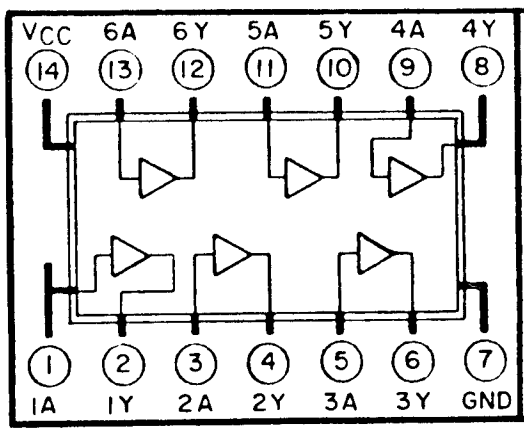

Case C

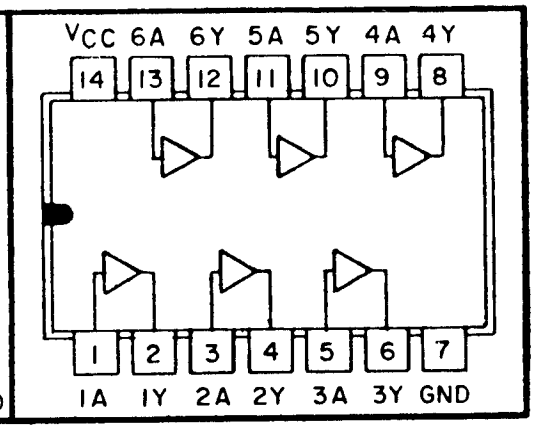

Device type 05

Cases A, B and D

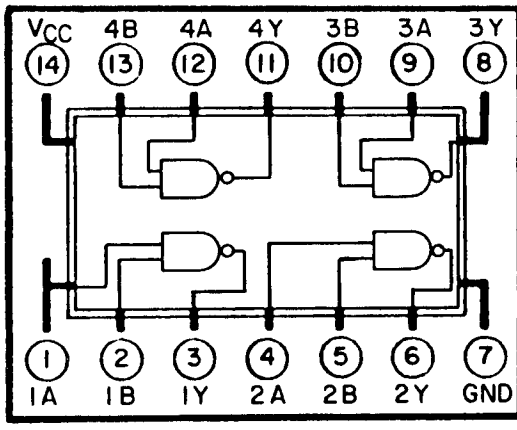

Case C

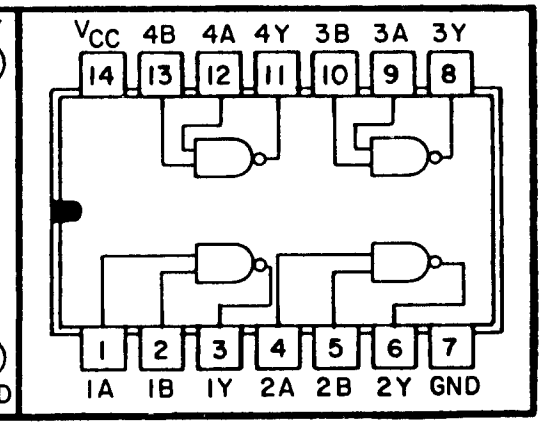

FIGURE 1. Logic diagram and terminal connections (top views).

Device types 01 and 02

Truth table each gate	
Input	Output
A	Y
L	H
H	L

Positive logic $Y = \overline{A}$

Device types 03 and 04

Truth table each gate	
Input	Output
A	Y
L	L
H	H

Positive logic $Y = A$

Device type 05

Truth table each gate		
Input		Output
A	B	Y
L	L	H
H	L	H
L	H	H
H	H	L

Positive logic $Y = \overline{AB}$

FIGURE 2. Truth tables and logic equations.

Device types 01 and 02

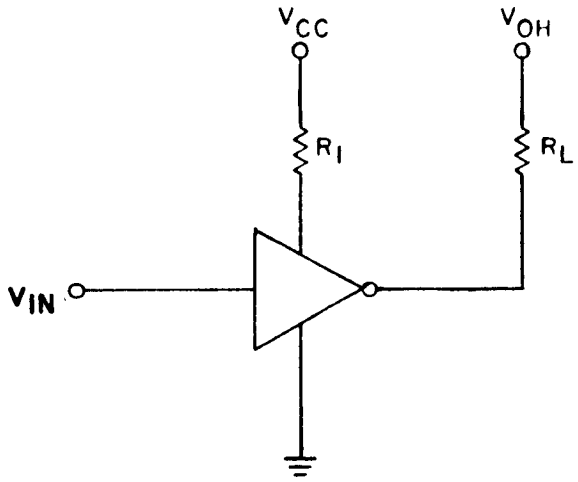

Device types 03 and 04

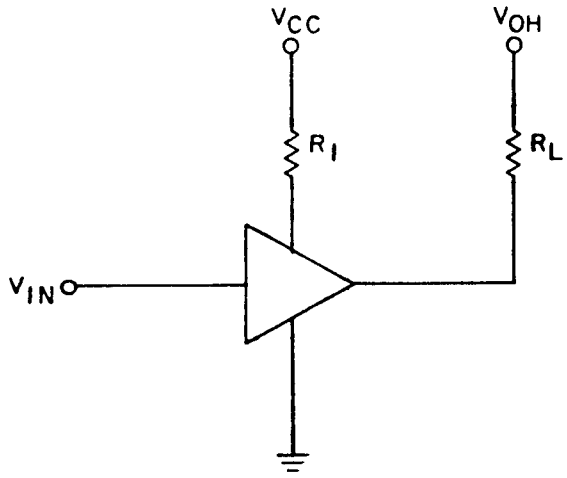

Device type 05

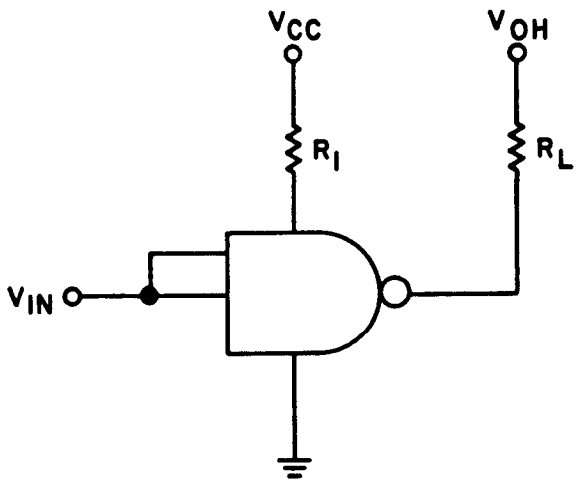

Device type	V_{OH} min	R_L
01, 03	30 V	1 kΩ ±5%
02, 04	15 V	500Ω ±5%
05	15 V	1 kΩ ±5%

NOTES:
1. V_{CC} and R_1, are such that the minimum voltage at the device terminal is 5 volts.
2. If parallel excitation is used, clock frequency shall be 100 kHz with minimum V_{IN} = 3 V and minimum duty cycle of 50%.

FIGURE 3. Burn-in and life test circuit.

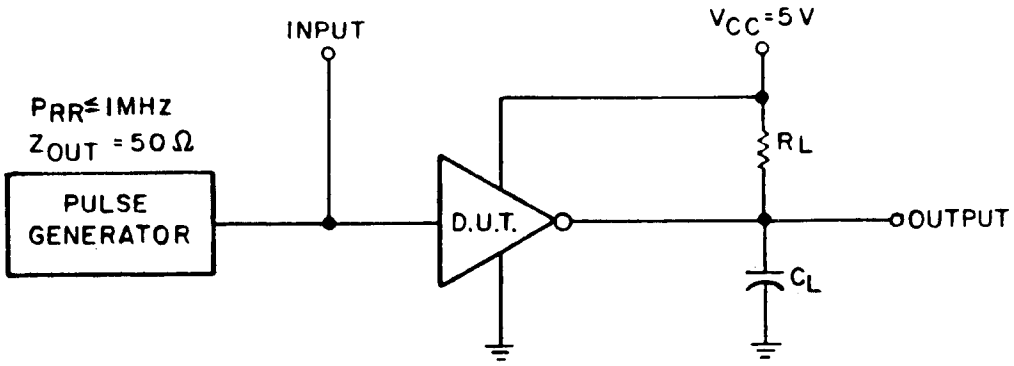

TEST CIRCUIT

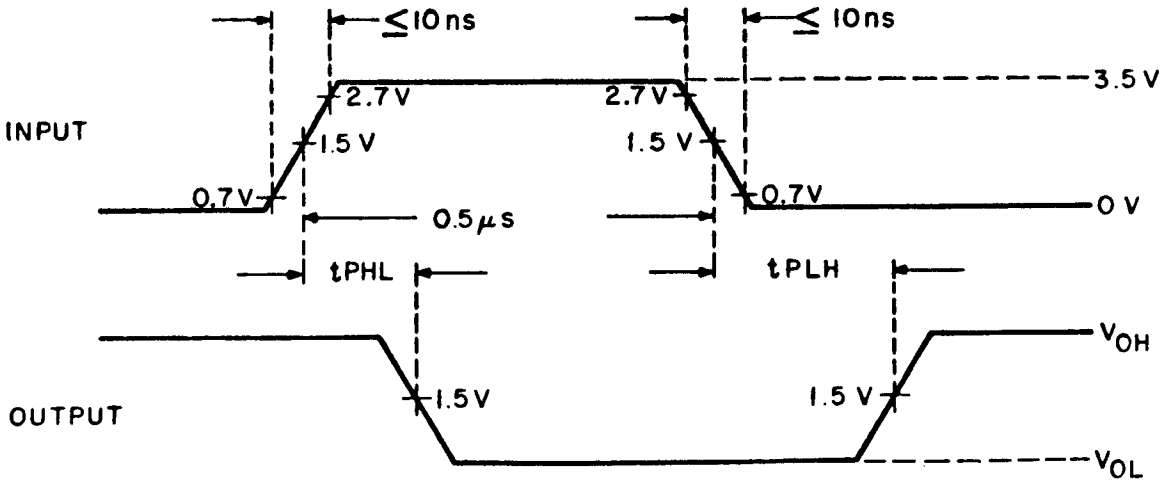

VOLTAGE WAVEFORMS

NOTES:
1. C_L = 50 pF ±10% minimum, including scope probe, wiring, and stray capacitance, without package in test figure.
2. Voltage measurements are to be made with respect to network ground terminal.
3. R_L = 150Ω ±5%.

FIGURE 4. Switching time test circuits for device types 01 and 02.

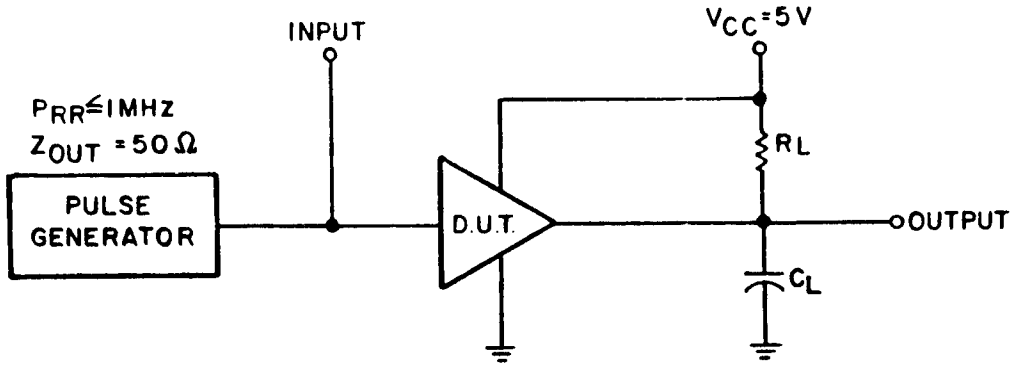

TEST CIRCUIT

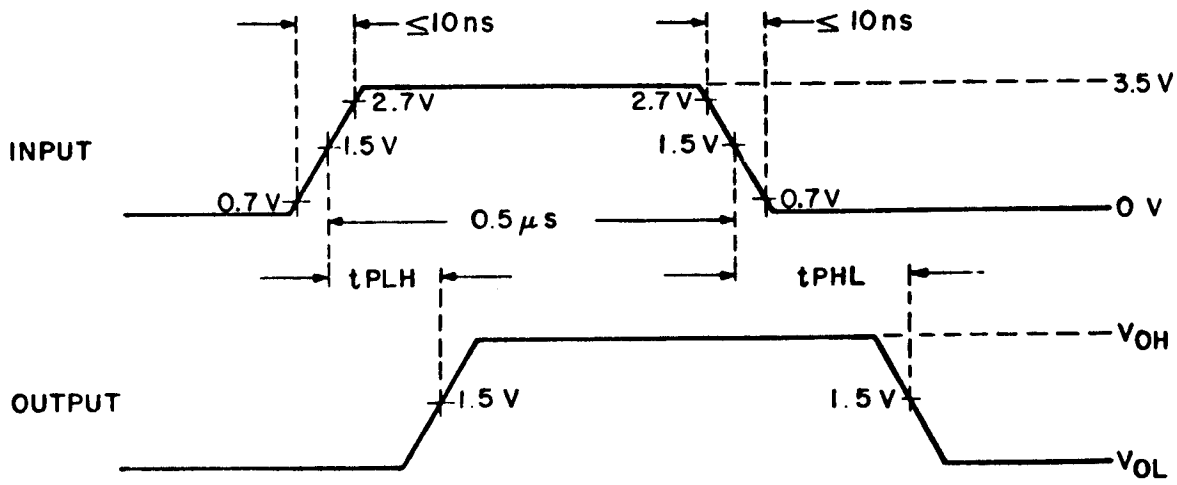

VOLTAGE WAVEFORMS

NOTES:
1. C_L = 50 pF ±10% minimum, including scope probe, wiring, and stray capacitance, without package in test figure.
2. Voltage measurements are to be made with respect to network ground terminal.
3. R_L = 150Ω ±5%.

FIGURE 5. Switching time test circuits for device types 03 and 04.

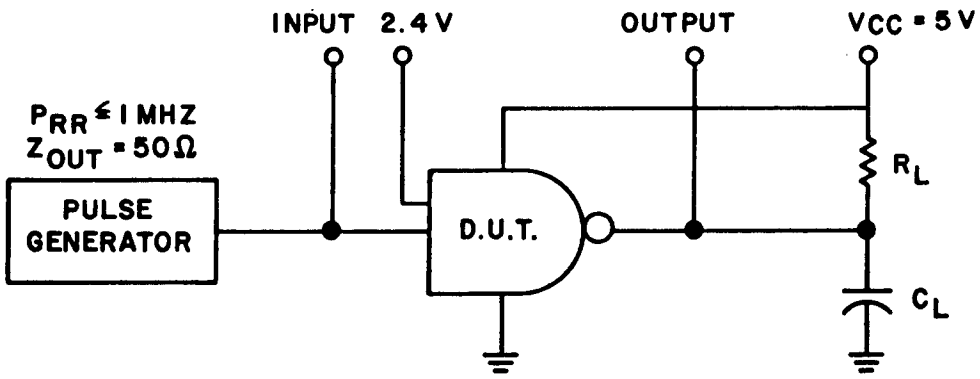

TEST CIRCUIT

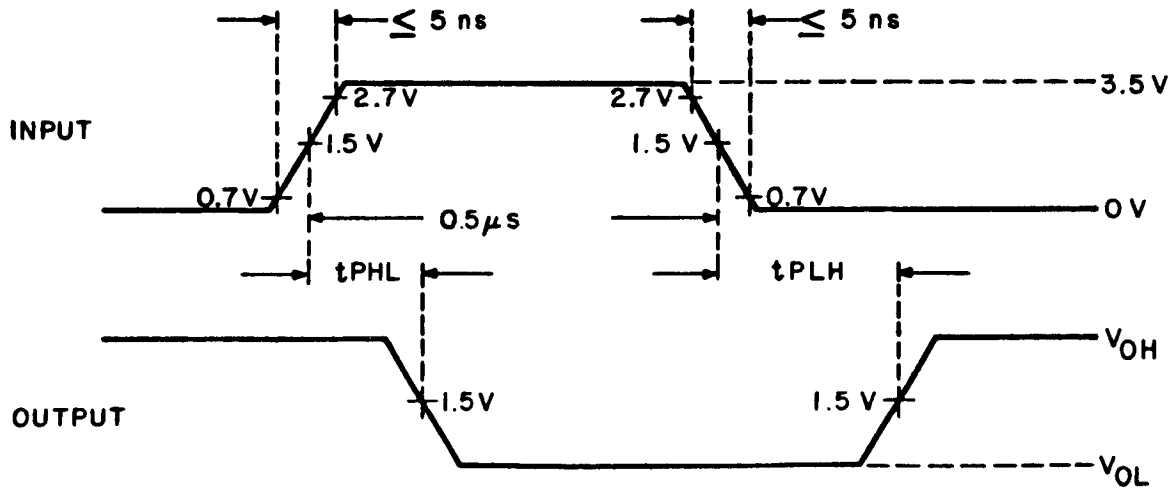

VOLTAGE WAVEFORMS

NOTES:
1. C_L = 50 pF ±10% minimum, including scope probe, wiring, and stray capacitance, without package in test figure.
2. Voltage measurements are to be made with respect to network ground terminal.
3. R_L = 1 kΩ ±5%.

FIGURE 6. Switching time test circuits for device type 05.

TABLE III. Group A inspection for device types 01 and 02.
Terminal conditions (High ≥ 2.0 V, Low ≤ 0.8 V or open)

Subgroup	Symbol	MIL-STD-883 method	Cases A, B, D	1	2	3	4	5	6	7	8	9	10	11	12	13	14	Measured terminal	Test limits		
			Case C	1	2	3	4	5	6	7	8	9	10	11	12	13	14		Min	Max	Unit
			Test no.	1A	1Y	2A	2Y	3A	3Y	GND	4Y	4A	5Y	5A	6Y	6A	V_{CC}				
1 T_C = +25°C	V_{OL1}	3007	1	2.0 V	30 mA	5.5 V		5.5 V		GND		5.5 V		5.5 V		5.5 V	4.5 V	1Y		0.7	V
		"	2	5.5 V		2.0 V	30 mA	5.5 V		"		"		"		"	"	2Y		"	"
		"	3	"		5.5 V		2.0 V	30 mA	"		"		"		"	"	3Y		"	"
		"	4	"		"		5.5 V		"	30 mA	2.0 V		"		"	"	4Y		"	"
		"	5	"		"		"		"		5.5 V	30 mA	2.0 V		"	"	5Y		"	"
		"	6	"		"		"		"		"		5.5 V	30 mA	2.0 V	"	6Y		"	"
	V_{OL2}	3007	7	2.0 V	16 mA	"				"		"		"		5.5 V	"	1Y		0.4	"
		"	8	5.5 V		2.0 V	16 mA	"		"		"		"		"	"	2Y		"	"
		"	9	"		5.5 V		2.0 V	16 mA	"		"		"		"	"	3Y		"	"
		"	10	"		"		5.5 V		"	16 mA	2.0 V		"		"	"	4Y		"	"
		"	11	"		"		"		"		5.5 V	16 mA	2.0 V		"	"	5Y		"	"
		"	12	"		"		"		"		"		5.5 V	16 mA	2.0 V	"	6Y		"	"
	I_{CEX}		13	0.8 V	A	"		"		"		"		"		5.5 V	"	1Y		250	μA
			14	5.5 V		0.8 V	A	"		"		"		"		"	"	2Y		"	"
			15	"		5.5 V		0.8 V	A	"		"		"		"	"	3Y		"	"
			16	"		"		5.5 V		"	A	0.8 V		"		"	"	4Y		"	"
			17	"		"		"		"		5.5 V	A	0.8 V		"	"	5Y		"	"
			18	"		"		"		"		5.5 V		5.5 V	A	0.8 V	"	6Y		"	"
	V_{IC}		19	-12 mA						"							"	1A		-1.5	V
			20			-12 mA				"							"	2A		"	"
			21					-12 mA		"							"	3A		"	"
			22							"		-12 mA					"	4A		"	"
			23							"				-12 mA			"	5A		"	"
			24							"						-12 mA	"	6A		"	"
	I_{IH1}	3010	25	2.4 V		GND		GND		"		GND		GND		GND	5.5 V	1A		40	μA
		"	26	GND		2.4 V		GND		"		"		"		"	"	2A		"	"
		"	27	"		GND		2.4 V		"		"		"		"	"	3A		"	"
		"	28	"		"		GND		"		2.4 V		"		"	"	4A		"	"
		"	29	"		"		"		"		GND		2.4 V		"	"	5A		"	"
		"	30	"		"		"		"		"		GND		2.4 V	"	6A		"	"
	I_{IH2}	3010	31	5.5 V		"		"		"		"		"		GND	"	1A		100	"
		"	32	GND		5.5 V		"		"		"		"		"	"	2A		"	"
		"	33	"		GND		5.5 V		"		"		"		"	"	3A		"	"
		"	34	"		"		GND		"		5.5 V		"		"	"	4A		"	"
		"	35	"		"		"		"		GND		5.5 V		"	"	5A		"	"
		"	36	"		"		"		"		GND		GND		5.5 V	"	6A		"	"

Note: A = 30 volts for device type 01 and 15 volts for device type 02.

TABLE III. Group A inspection for devices types 01 and 02 - Continued.
Terminal conditions (High ≥ 2.0 V, Low ≤ 0.8 V or open)

Subgroup	Symbol	MIL-STD-883 method	Cases A, B, D	1	2	3	4	5	6	7	8	9	10	11	12	13	14	Measured terminal	Test limits Min	Max	Unit
			Case C	1	2	3	4	5	6	7	8	9	10	11	12	13	14				
			Test no.	1A	1Y	2A	2Y	3A	3Y	GND	4Y	4A	5Y	5A	6Y	6A	V_{CC}				
1 T_C = +25°C	I_{IL}	3009	37 CKT A,C	0.4 V		5.5 V		5.5 V		GND		5.5 V		5.5 V		5.5 V	5.5 V	1A	-.7	-1.6	mA
		"	37 CKT B	0.4 V		5.5 V		"		"		"		"		"	"	1A	-.4	-1.3	"
		"	38 CKT A,C	5.5 V		0.4 V		"		"		"		"		"	"	2A	-.7	-1.6	"
		"	38 CKT B	"		0.4 V		"		"		"		"		"	"	2A	-.4	-1.3	"
		"	39 CKT A,C	"		5.5 V		0.4 V		"		"		"		"	"	3A	-.7	-1.6	"
		"	39 CKT B	"		"		0.4 V		"		"		"		"	"	3A	-.4	-1.3	"
		"	40 CKT A,C	"		"		5.5 V		"		0.4 V		"		"	"	4A	-.7	-1.6	"
		"	40 CKT B	"		"		"		"		0.4 V		"		"	"	4A	-.4	-1.3	"
		"	41 CKT A,C	"		"		"		"		5.5 V		0.4 V		"	"	5A	-.7	-1.6	"
		"	41 CKT B	"		"		"		"		"		0.4 V		"	"	5A	-.4	-1.3	"
		"	42 CKT A,C	"		"		"		"		"		5.5 V		0.4 V	"	6A	-.7	-1.6	"
		"	42 CKT B	"		"		"		"		"		5.5 V		0.4 V	"	6A	-.4	-1.3	"
	I_{CCL}	3005	43 CKT A	"		"		"		"		"		"		5.5 V	"	V_{CC}		41	"
	I_{CCL}	"	43 CKT B	"		"		"		"		"		"		5.5 V	"	"		48	"
		"	43 CKT C	"		"		"		"		"		"		5.5 V	"	"		44	"
	I_{CCH}	"	44 CKT A	GND		GND		GND		"		GND		GND		GND	"	"		42	"
	I_{CCH}	"	44 CKT B	"		"		"		"		"		"		"	"	"		51	"
		"	44 CKT C	"		"		"		"		"		"		"	"	"		48	"
2	Same tests, terminal conditions and limits as for subgroup 1, except T_C = +125°C and V_{IC} tests are omitted. V_{IL} = 0.7 V for I_{CEX}																				
3	Same tests, terminal conditions and limits as for subgroup 1, except T_C = -55°C and V_{IC} tests are omitted.																				
9 T_C = +25°C	t_{PHL}	3003 (Fig 4)	45	IN	OUT	IN	OUT	IN	OUT	GND	OUT	IN	OUT	IN	OUT	IN	5.0 V	1A to 1Y	3	25	ns
		"	46							"							"	2A to 2Y	"	"	"
		"	47							"							"	3A to 3Y	"	"	"
		"	48							"							"	4A to 4Y	"	"	"
		"	49							"							"	5A to 5Y	"	"	"
		"	50							"							"	6A to 6Y	"	"	"
	t_{PLH}	"	51	IN	OUT	IN	OUT	IN	OUT	"	OUT	IN	OUT	IN	OUT	IN	"	1A to 1Y	"	20	"
		"	52							"							"	2A to 2Y	"	"	"
		"	53							"							"	3A to 3Y	"	"	"
		"	54							"							"	4A to 4Y	"	"	"
		"	55							"							"	5A to 5Y	"	"	"
		"	56							"							"	6A to 6Y	"	"	"
10 T_C = +125°C	t_{PHL}	"	57	IN	OUT	IN	OUT	IN	OUT	"	OUT	IN	OUT	IN	OUT	IN	"	1A to 1Y	"	30	"
		"	58							"							"	2A to 2Y	"	"	"
		"	59							"							"	3A to 3Y	"	"	"
		"	60							"							"	4A to 4Y	"	"	"
		"	61							"							"	5A to 5Y	"	"	"
		"	62							"							"	6A to 6Y	"	"	"
	t_{PLH}	"	63	IN	OUT	IN	OUT	IN	OUT	"	OUT	IN	OUT	IN	OUT	IN	"	1A to 1Y	"	25	"
		"	64							"							"	2A to 2Y	"	"	"
		"	65							"							"	3A to 3Y	"	"	"
		"	66							"							"	4A to 4Y	"	"	"
		"	67							"							"	5A to 5Y	"	"	"
		"	68							"							"	6A to 5Y	"	"	"
11	Same tests, terminal conditions and limits as for subgroup 10, except T_C = -55°C.																				

TABLE III. Group A inspection for device types 03 and 04.
Terminal conditions (High ≥ 2.0 V, Low ≤ 0.8 V or open)

Subgroup	Symbol	MIL-STD-883 method	Cases A, B, D	1	2	3	4	5	6	7	8	9	10	11	12	13	14	Measured terminal	Test limits		
			Case C	1	2	3	4	5	6	7	8	9	10	11	12	13	14		Min	Max	Unit
			Test no.	1A	1Y	2A	2Y	3A	3Y	GND	4Y	4A	5Y	5A	6Y	6A	V_{CC}				
1 T_C = +25°C	V_{OL1}	3007	1	0.8 V	30 mA	5.5 V		5.5 V		GND		5.5 V		5.5 V		5.5 V	4.5 V	1Y		0.7	V
		"	2	5.5 V		0.8 V	30 mA	5.5 V		"		"		"		"	"	2Y		"	"
		"	3	"		5.5 V		0.8 V	30 mA	"		"		"		"	"	3Y		"	"
		"	4	"		"		5.5 V		"	30 mA	0.8 V		"		"	"	4Y		"	"
		"	5	"		"		"		"		5.5 V	30 mA	0.8 V		"	"	5Y		"	"
		"	6	"		"		"		"		"		5.5 V	30 mA	0.8 V	"	6Y		"	"
	V_{OL2}	3007	7	0.8 V	16 mA	"		"		"		"		"		5.5 V	"	1Y		0.4	"
		"	8	5.5 V		0.8 V	16 mA	"		"		"		"		"	"	2Y		"	"
		"	9	"		5.5 V		0.8 V	16 mA	"		"		"		"	"	3Y		"	"
		"	10	"		"		5.5 V		"	16 mA	0.8 V		"		"	"	4Y		"	"
		"	11	"		"		"		"		5.5 V	16 mA	0.8 V		"	"	5Y		"	"
		"	12	"		"		"		"		"		5.5 V	16 mA	0.8 V	"	6Y		"	"
	I_{CEX}		13	2.0 V	A	"		"		"		"		"		5.5 V	"	1Y		250	μA
			14	5.5 V		2.0 V	A	"		"		"		"		"	"	2Y		"	"
			15	"		5.5 V		2.0 V	A	"		"		"		"	"	3Y		"	"
			16	"		"		5.5 V		"	A	2.0 V		"		"	"	4Y		"	"
			17	"		"		"		"		5.5 V	A	2.0 V		"	"	5Y		"	"
			18	"		"		"		"		5.5 V		5.5 V	A	2.0 V	"	6Y		"	"
	V_{IC}		19	-12 mA						"							"	1A		-1.5	V
			20			-12 mA				"							"	2A		"	"
			21					-12 mA		"							"	3A		"	"
			22							"		-12 mA					"	4A		"	"
			23							"				-12 mA			"	5A		"	"
			24							"						-12 mA	"	6A		"	"
	I_{IH1}	3010	25	2.4 V		GND		GND		"		GND		GND		GND	5.5 V	1A		40	μA
		"	26	GND		2.4 V		GND		"		"		"		"	"	2A		"	"
		"	27	"		GND		2.4 V		"		"		"		"	"	3A		"	"
		"	28	"		"		GND		"		2.4 V		"		"	"	4A		"	"
		"	29	"		"		"		"		GND		2.4 V		"	"	5A		"	"
		"	30	"		"		"		"		"		GND		2.4 V	"	6A		"	"
	I_{IH2}	3010	31	5.5 V		"		"		"		"		"		GND	"	1A		100	"
		"	32	GND		5.5 V		"		"		"		"		"	"	2A		"	"
		"	33	"		GND		5.5 V		"		"		"		"	"	3A		"	"
		"	34	"		"		GND		"		5.5 V		"		"	"	4A		"	"
		"	35	"		"		"		"		GND		5.5 V		"	"	5A		"	"
		"	36	"		"		"		"		GND		GND		5.5 V	"	6A		"	"

Note: A = 30 volts for device type 03 and 15 volts for device type 04.

TABLE III. Group A inspection for device types 03 and 04 - Continued.
Terminal conditions (High ≥ 2.0 V, Low ≤ 0.8 V or open)

Subgroup	Symbol	MIL-STD-883 method	Cases A, B, D	1	2	3	4	5	6	7	8	9	10	11	12	13	14	Measured terminal	Test limits Min	Max	Unit
			Case C	1	2	3	4	5	6	7	8	9	10	11	12	13	14				
			Test no.	1A	1Y	2A	2Y	3A	3Y	GND	4Y	4A	5Y	5A	6Y	6A	V_{CC}				
1 T_C = +25°C	I_{IL}	3009	37 CKT A,C	0.4 V		5.5 V		5.5 V		GND		5.5 V		5.5 V		5.5 V	5.5 V	1A	-.7	-1.6	mA
		"	37 CKT B	0.4 V		5.5 V		"		"		"		"		"	"	1A	-.4	-1.3	"
		"	38 CKT A,C	5.5 V		0.4 V		"		"		"		"		"	"	2A	-.7	-1.6	"
		"	38 CKT B	"		0.4 V		"		"		"		"		"	"	2A	-.4	-1.3	"
		"	39 CKT A,C	"		5.5 V		0.4 V		"		"		"		"	"	3A	-.7	-1.6	"
		"	39 CKT B	"		"		0.4 V		"		"		"		"	"	3A	-.4	-1.3	"
		"	40 CKT A,C	"		"		5.5 V		"		0.4 V		"		"	"	4A	-.7	-1.6	"
		"	40 CKT B	"		"		"		"		0.4 V		"		"	"	4A	-.4	-1.3	"
		"	41 CKT A,C	"		"		"		"		5.5 V		0.4 V		"	"	5A	-.7	-1.6	"
		"	41 CKT B	"		"		"		"		"		0.4 V		"	"	5A	-.4	-1.3	"
		"	42 CKT A,C	"		"		"		"		"		5.5 V		0.4 V	"	6A	-.7	-1.6	"
		"	42 CKT B	"		"		"		"		"		5.5 V		0.4 V	"	6A	-.4	-1.3	"
	I_{CCH}	3005	43 CKT A,B	"		"		"		"		"		"		5.5 V	"	V_{CC}		42	"
		3005	43 CKT C	"		"		"		"		"		"		"	"	"		46	"
	I_{CCL}	3005	44 CKT A,B	GND		GND		GND		"		GND		GND		GND	"	"		30	"
		3005	44 CKT C	GND		GND		GND		"		GND		GND		GND	"	"		32	"
2	Same tests, terminal conditions and limits as for subgroup 1, except T_C = +125°C and V_{IC} tests are omitted. V_{IL} = 0.7 V for V_{OL1} and V_{OL2}																				
3	Same tests, terminal conditions and limits as for subgroup 1, except T_C = -55°C and V_{IC} tests are omitted.																				
9 T_C = +25°C	t_{PHL}	3003 (Fig 5)	45	IN	OUT					GND							5.0 V	1A to 1Y	3	26	ns
		"	46			IN	OUT			"							"	2A to 2Y	"	"	"
		"	47					IN	OUT	"							"	3A to 3Y	"	"	"
		"	48							"	OUT	IN					"	4A to 4Y	"	"	"
		"	49							"			OUT	IN			"	5A to 5Y	"	"	"
		"	50							"					OUT	IN	"	6A to 6Y	"	"	"
	t_{PLH}	"	51	IN	OUT					"							"	1A to 1Y	"	15	"
		"	52			IN	OUT			"							"	2A to 2Y	"	"	"
		"	53					IN	OUT	"							"	3A to 3Y	"	"	"
		"	54							"	OUT	IN					"	4A to 4Y	"	"	"
		"	55							"			OUT	IN			"	5A to 5Y	"	"	"
		"	56							"					OUT	IN	"	6A to 6Y	"	"	"
10 T_C = +125°C	t_{PHL}	"	57	IN	OUT					"							"	1A to 1Y	"	35	"
		"	58			IN	OUT			"							"	2A to 2Y	"	"	"
		"	59					IN	OUT	"							"	3A to 3Y	"	"	"
		"	60							"	OUT	IN					"	4A to 4Y	"	"	"
		"	61							"			OUT	IN			"	5A to 5Y	"	"	"
		"	62							"					OUT	IN	"	6A to 6Y	"	"	"
	t_{PLH}	"	63	IN	OUT					"							"	1A to 1Y	"	20	"
		"	64			IN	OUT			"							"	2A to 2Y	"	"	"
		"	65					IN	OUT	"							"	3A to 3Y	"	"	"
		"	66							"	OUT	IN					"	4A to 4Y	"	"	"
		"	67							"			OUT	IN			"	5A to 5Y	"	"	"
		"	68							"					OUT	IN	"	6A to 6y	"	"	"
11	Same tests, terminal conditions and limits as for subgroup 10, except T_C = -55°C.																				

TABLE III. Group A inspection for device type 05.
Terminal conditions (High ≥ 2.0 V, Low ≤ 0.8 V or open)

Subgroup	Symbol	MIL-STD-883 method	Cases A,B,C,D Test no.	1 1A	2 1B	3 1Y	4 2A	5 2B	6 2Y	7 GND	8 3Y	9 3A	10 3B	11 4Y	12 4A	13 4B	14 V_{CC}	Measured terminal	Test limits Min	Max	Unit
1 T_C = +25°C	V_{OL2}	3007	1	2.0 V	2.0 V	16 mA	5.5 V	5.5 V		GND		5.5 V	5.5 V		5.5 V	5.5 V	4.5 V	1Y		0.4	V dc
		"	2	5.5 V	5.5 V		2.0 V	2.0 V	16 mA	"		5.5 V	5.5 V		"	"	"	2Y		"	"
		"	3	"	"		5.5 V	5.5 V		"	16 mA	2.0 V	2.0 V		"	"	"	3Y		"	"
		"	4	"	"		"	"		"		5.5 V	5.5 V	16 mA	2.0 V	2.0 V	"	4Y		"	"
	I_{CEX}		5	0.8 V	2.0 V	15.0 V	"	"		"		"	"		5.5 V	5.5 V	"	1Y		250	μA
			6	2.0 V	0.8 V	15.0 V	"	"		"		"	"		"	"	"	1Y		"	"
			7	5.5 V	5.5 V		0.8 V	2.0 V	15.0 V	"		"	"		"	"	"	2Y		"	"
			8	"	"		2.0 V	0.8 V	15.0 V	"		"	"		"	"	"	2Y		"	"
			9	"	"		5.5 V	5.5 V		"	15.0 V	0.8 V	2.0 V		"	"	"	3Y		"	"
			10	"	"		"	"		"	15.0 V	2.0 V	0.8 V		"	"	"	3Y		"	"
			11	"	"		"	"		"		5.5 V	5.5 V	15.0 V	0.8 V	2.0 V	"	4Y		"	"
			12	"	"		"	"		"		5.5 V	5.5 V	15.0 V	2.0 V	0.8 V	"	4Y		"	"
	V_{IC}		13	-12 mA						"							"	1A		-1.5	V
			14		-12 mA					"							"	1B		"	"
			15				-12 mA			"							"	2A		"	"
			16					-12 mA		"							"	2B		"	"
			17							"		-12 mA					"	3A		"	"
			18							"			-12 mA				"	3B		"	"
			19							"					-12 mA		"	4A		"	"
			20							"						-12 mA	"	4B		"	"
	I_{IH1}	3010	21	2.4 V	GND		GND	GND		"		GND	GND		GND	GND	5.5 V	1A		40	μA
		"	22	GND	2.4 V		GND	"		"		"	"		"	"	"	1B		"	"
		"	23	"	GND		2.4 V	"		"		"	"		"	"	"	2A		"	"
		"	24	"	"		GND	2.4 V		"		"	"		"	"	"	2B		"	"
		"	25	"	"		"	"		"		2.4 V	"		"	"	"	3A		"	"
		"	26	"	"		"	"		"		GND	2.4 V		"	"	"	3B		"	"
		"	27	"	"		"	"		"		"	GND		2.4 V	"	"	4A		"	"
		"	28	"	"		"	"		"		"	GND		GND	2.4 V	"	4B		"	"
	I_{IH2}	"	29	5.5 V	GND		GND	GND		"		GND	GND		GND	GND	"	1A		100	μA
		"	30	GND	5.5 V		GND	"		"		"	"		"	"	"	1B		"	"
		"	31	"	GND		5.5 V	"		"		"	"		"	"	"	2A		"	"
		"	32	"	"		GND	5.5 V		"		"	"		"	"	"	2B		"	"
		"	33	"	"		"	GND		"		5.5 V	"		"	"	"	3A		"	"
		"	34	"	"		"	"		"		GND	5.5 V		"	"	"	3B		"	"
		"	35	"	"		"	"		"		"	GND		5.5 V	"	"	4A		"	"
		"	36	"	"		"	"		"		"	GND		GND	5.5 V	"	4B		"	"

TABLE III. Group A inspection for device type 05 - Continued.
Terminal conditions (High ≥ 2.0 V, Low ≤ 0.8 V or open)

Subgroup	Symbol	MIL-STD-883 method	Cases A,B,C,D Test no.	1 1A	2 1B	3 1Y	4 2A	5 2B	6 2Y	7 GND	8 3Y	9 3A	10 3B	11 4Y	12 4A	13 4B	14 V_{CC}	Measured terminal	Test limits Min	Max	Unit
1 T_C = +25°C	I_{IL}	3009	37	0.4 V	5.5 V		5.5 V	5.5 V		GND		5.5 V	5.5 V		5.5 V	5.5 V	5.5 V	1A	-.7	-1.6	mA
		"	38	5.5 V	0.4 V		5.5 V	5.5 V		"		"	"		"	"	"	1B	"	"	"
		"	39	"	5.5 V		0.4 V	5.5 V		"		"	"		"	"	"	2A	"	"	"
		"	40	"	"		5.5 V	0.4 V		"		"	"		"	"	"	2B	"	"	"
		"	41	"	"		"	5.5 V		"		0.4 V	"		"	"	"	3A	"	"	"
		"	42	"	"		"	"		"		5.5 V	0.4 V		"	"	"	3B	"	"	"
		"	43	"	"		"	"		"		"	5.5 V		0.4 V	"	"	4A	"	"	"
		"	44	"	"		"	"		"		"	"		5.5 V	0.4 V	"	4B	"	"	"
	I_{CCL}	3005	45	"	"		"	"		"		"	"		5.5 V	5.5 V	"	V_{CC}		22	"
	I_{CCH}	3005	46	GND	GND		GND	GND		"		GND	GND		GND	GND	"	V_{CC}		8	"
2	Same tests, terminal conditions and limits as for subgroup 1, except T_C = +125°C and V_{IC} tests are omitted. V_{IL} = 0.7 V for I_{CEX}.																				
3	Same tests, terminal conditions and limits as for subgroup 1, except T_C = -55°C and V_{IC} tests are omitted.																				
9 T_C = +25°C	t_{PHL}	3003 (Fig 6)	47	IN	2.4 V	OUT	IN	2.4 V	OUT	GND							5.0 V	1A to 1Y	3	25	ns
		"	48							"							"	2A to 2Y	"	"	"
		"	49							"	OUT	IN	2.4 V	OUT	IN	2.4 V	"	3A to 3Y	"	"	"
		"	50							"							"	4A to 4Y	"	"	"
	t_{PLH}	"	51	IN	2.4 V	OUT	IN	2.4 V	OUT	"							"	1A to 1Y	"	30	"
		"	52							"							"	2A to 2Y	"	"	"
		"	53							"	OUT	IN	2.4 V	OUT	IN	2.4 V	"	3A to 3Y	"	"	"
		"	54							"							"	4A to 4Y	"	"	"
10 T_C = +125°C	t_{PHL}	"	55	IN	2.4 V	OUT	IN	2.4 V	OUT	"							"	1A to 1Y	"	35	"
		"	56							"							"	2A to 2Y	"	"	"
		"	57								OUT	IN	2.4 V	OUT	IN	2.4 V	"	3A to 3Y	"	"	"
		"	58														"	4A to 4Y	"	"	"
	t_{PLH}	"	59	IN	2.4 V	OUT	IN	2.4 V	OUT	"							"	1A to 1Y	"	40	"
		"	60							"							"	2A to 2Y	"	"	"
		"	61							"	OUT	IN	2.4 V	OUT	IN	2.4 V	"	3A to 3Y	"	"	"
		"	62							"							"	4A to 4Y	"	"	"
11	Same tests, terminal conditions and limits for subgroup 10, except T_C = -55°C.																				

4.5 Methods of inspection. Methods of inspection shall be specified as follows:

4.5.1 Voltage and current. All voltages given are referenced to the microcircuit ground terminal. Currents given are conventional and positive when flowing into the referenced terminal.

5. PACKAGING

5.1 Packaging requirements. The requirements for packaging shall be in accordance with MIL-M-38510.

6. NOTES

6.1 Intended use. Microcircuits conforming to this specification are intended for use for Government microcircuit applications (original equipment) and logistic purposes.

6.2 Ordering data. The acquisition document should specify the following:

a. Complete part number (see 1.2).

b. Requirements for delivery of one copy of the quality conformance inspection data pertinent to the device inspection lot to be supplied with each shipment by the device manufacturer, if applicable.

c. Requirements for certificate of compliance, if applicable.

d. Requirements for notification of change of product or process to the contracting activity in addition to notification to the qualifying activity, if applicable.

e. Requirements for failure analysis (including required test condition of method 5003 of MIL-STD-883), corrective action and reporting of results, if applicable.

f. Requirements for product assurance options.

g. Requirements for special carriers, lead lengths, or lead forming, if applicable, these requirements shall not affect the part number. Unless otherwise specified, these requirements shall not apply to direct purchase by or direct shipment to the Government.

h. Requirements for "JAN" marking.

6.3 Abbreviations, symbols, and definitions. The abbreviations, symbols, and definitions used herein are defined in MIL-M-38510, MIL-STD-1331, and as follows:

GND - - - - - - - - - - - - - - Ground zero voltage potential.

V_{IN} - - - - - - - - - - - - - - Voltage level at an input terminal.

V_{IC} - - - - - - - - - - - - - - Input clamp voltage.

I_{IN} - - - - - - - - - - - - - - Current flowing into an input terminal.

6.4 Logistic support. Lead materials and finishes (see 3.3) are interchangeable. Unless otherwise specified, microcircuits acquired for Government logistic support will be acquired to device class B (see 1.2.2), lead material and finish C (see 3.3). Longer length leads and lead forming shall not affect the part number.

6.5 Substitutability. The cross-reference information below is presented for the convenience of users. Microcircuits covered by this specification will functionally replace the listed generic-industry type. Generic-industry microcircuit types may not have equivalent operational performance characteristics across military temperature ranges or reliability factors equivalent to MIL-M-38510 device types and may have slight physical variations in relation to case size. The presence of this information shall not be deemed as permitting substitution of generic-industry types for MIL-M-38510 types or as a waiver of any of the provisions of MIL-M-38510.

Device type	Commercial type
01	5406
02	5416
03	5407
04	5417
05	5426

6.6 In-lieu-of documents. MIL-M-0038510/8C(19) was issued as an "in-lieu-of" document for MIL-M-38510/8B. This revision, MIL-M-38510/8D supersedes MIL-M-0038510/8C(19), MIL-M-38510/8B, and MIL-M-38510/8C.

6.7 Changes from previous issue. Asterisks are not used in this revision to identify changes with respect to the previous issue due to the extensiveness of the changes.

Custodians:
Army - ER
Navy - EC
Air Force - 17

Review activities:
Army - MI, AR
Navy - OS, SH, TD
Air Force - 11, 19, 85, 99
DLA - ES

User activities:
Army - SM
Navy - CG, MC, AS

Agent:
DLA - ES

Preparing activity:
Air Force - 17

(Project 5962-0809)