FED. SUP. CLASS
5935

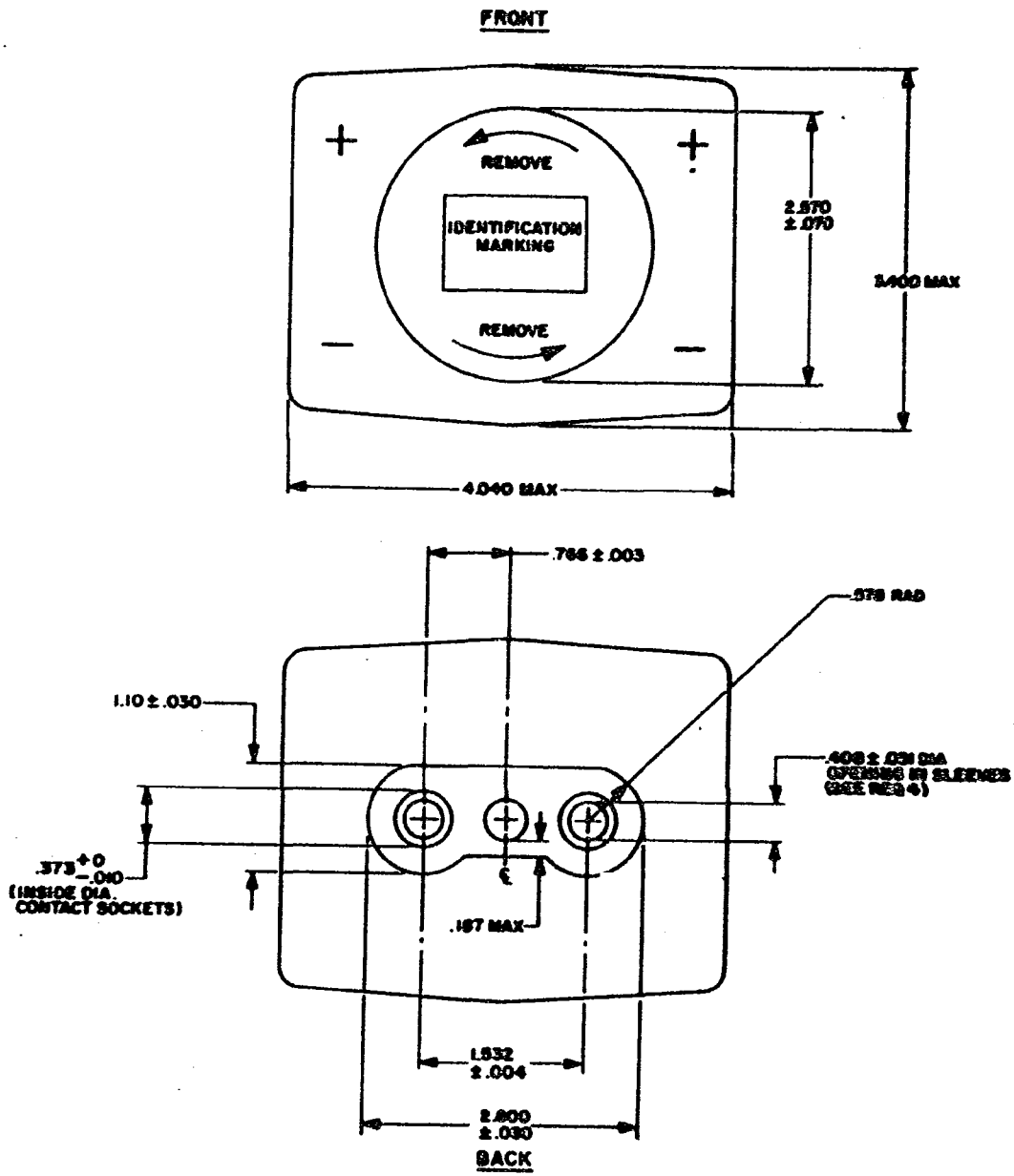

P/N MS25182-2

FOR DESIGN FEATURE PURPOSES, THIS STANDARD TAKES PRECEDENCE OVER PROCUREMENT DOCUMENTS REFERENCED HEREIN. REFERENCED DOCUMENTS SHALL BE OF THE ISSUE IN EFFECT ON DATE OF INVITATIONS FOR BID.

(G) REVISED AND REDRAWN

P.A. NAVY — AS Other Cust. USAF - 85 ARMY - AV	INTERNATIONAL INTEREST	TITLE PLUG, ELECTRIC, FOUR-WIRE AIRCRAFT STORAGE BATTERY	MILITARY STANDARD MS25182
PROCUREMENT SPECIFICATION MIL-P-18148	SUPERSEDES		SHEET 1 OF 3

DD FORM 1 MAR 73 672-1 (Coordinated)

PROJECT NO 5935-N231

APPROVED 26 MAY 1956 REVISED (P) 4 JUN 71 (G) 1 JUNE 84

NAVY - AS
USAF - 80, 11
ARMY - AV

FED. SUP CLASS
5935

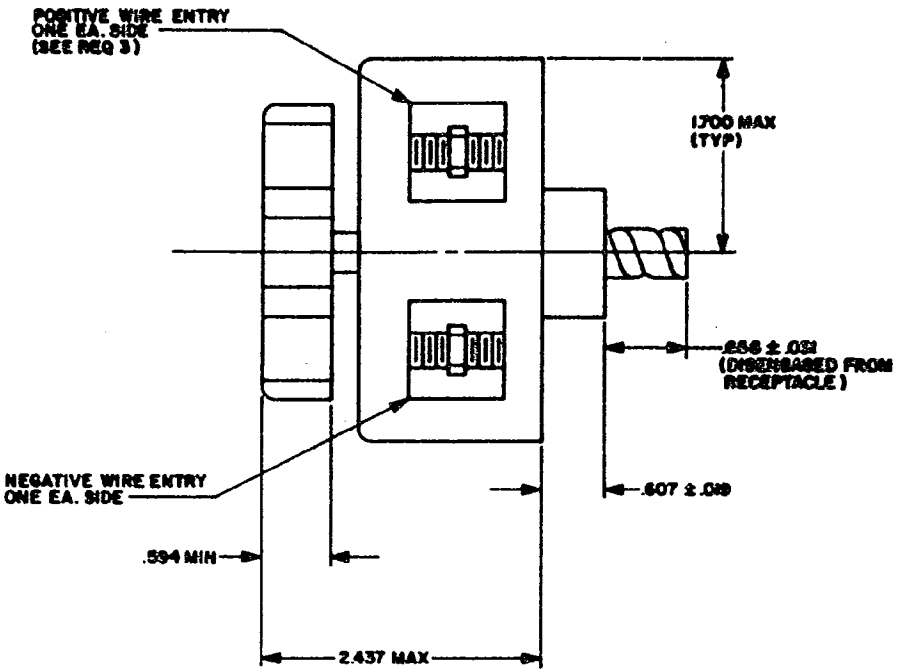

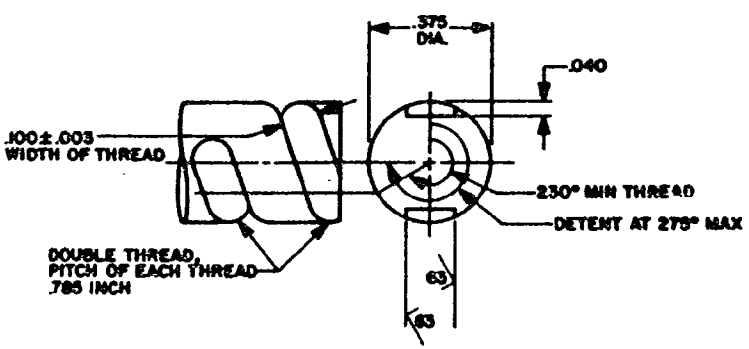

ALL THREAD DIMENSIONS ARE TYPICAL, ALL TOLERANCES ARE ± .005 UNLESS OTHERWISE SPECIFIED.

P.A. NAVY - AS Other Cust USAF - 80 ARMY - AV	INTERNATIONAL INTEREST *	TITLE PLUG, ELECTRIC, FOUR-WIRE, AIRCRAFT STORAGE BATTERY	MILITARY STANDARD MS25182
PROCUREMENT SPECIFICATION MIL-P-18148		SUPERSEDES	SHEET 2 OF 3

DD FORM 1 SEP 71 672-1 (Coordinated)

PREVIOUS EDITIONS OF THIS FORM ARE OBSOLETE.

REVIEWER SYMBOLS: NAVY - AS USAF - 80, 11 ARMY - AV

USER SYMBOLS:

"Review/user information is current as of the date of this document. For future coordination of changes to this document, draft circulation should be based on the information in the current DODISS."

This military standard is mandated for use by all Departments & Agencies of the Department of Defense. Selection for all the engineering and design applications and for repetitive use shall be made from this document.

26 MAY 1956 ... SED (C) FOR CHANGES SEE SHEETS 1, 2 & 3

REQUIREMENTS:

1. THE PLUGS SHALL CONFORM TO THE REQUIREMENTS OF MIL-P-18148 FOR FOUR-WIRE PLUGS EXCEPT AS MODIFIED BY THE FOLLOWING:

   3.6.2 MECHANICAL OPERATION, FOUR-WIRE PLUGS. CHANGE FOURTH SENTENCE TO READ: THE TORQUE REQUIRED TO ENGAGE THE PLUG WITH A TYPE MS3509 RECEPTACLE SHALL NOT EXCEED 11.5 INCH-POUNDS, AND TO DISENGAGE, 5 INCH-POUNDS.

2. THE PLUGS SHALL BE USEABLE WITH A MATING, TYPE MS3509 RECEPTACLE.

3. THE WIRE ENTRY HOLES SHALL BE LARGE ENOUGH TO ACCEPT .900 INCH DIAMETER WIRE. GEOMETRY OF THE HOLES IS OPTIONAL AS LONG AS THIS REQUIREMENT IS MET.

4. SLEEVES SHALL BE INSTALLED AROUND THE CONTACT SOCKETS TO PROVIDE ELECTRICAL INSULATION. THE SLEEVES SHALL BE CONSTRUCTED OF A MATERIAL THAT WILL NOT SUPPORT COMBUSTION.

NOTES:

1. ALL DIMENSIONS ARE IN INCHES. WHERE ONLY MAXIMUM OR MINIMUM DIMENSIONS ARE SHOWN, THE PLUG NEED NOT HAVE THE SHAPE SHOWN.

2. MS25182-2 SUPERSEDES MS25182-1.

APPROVED 26 MAY 1956 REVISED (C) FOR CHANGES SEE SHEETS 1, 2 & 3

This military standard is mandatory for use by all Departments & Agencies of the Department of Defense. Selection for all new engineering and design applications and for repetitive use shall be made from this document.

"Review/user information is current as of the date of this document. For future coordination of changes to this document, draft circulation should be based on the information in the current DODISS."

REVIEWER SYMBOLS: NAVY - AS USAF - 80, 11 ARMY - AV

USER SYMBOLS:

P.A. NAVY - AS Other Cust USAF - 80 ARMY - AV	INTERNATIONAL INTEREST *	TITLE PLUG, ELECTRIC, FOUR-WIRE, AIRCRAFT STORAGE BATTERY	MILITARY STANDARD MS25182
PROCUREMENT SPECIFICATION MIL-P-18148		SUPERSEDES	SHEET 3 OF 3

☆U.S. GOVERNMENT PRINTING OFFICE: 1934 — 703-040/A2100