MILITARY SPECIFICATION SHEET

PLUGS, TELEPHONE, AND ACCESSORY SCREWS

(SCREWS, TERMINAL AND SHELL)

This specification is approved for use by all Departments and Agencies of the Department of Defense.

The complete requirements for procuring the plugs described herein shall consist of this document and the latest issue of Specification MIL-P-642.

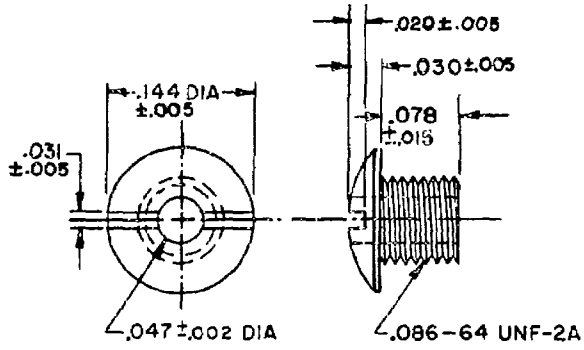

TERMINAL SCREW

PART NUMBER	M642/12-1

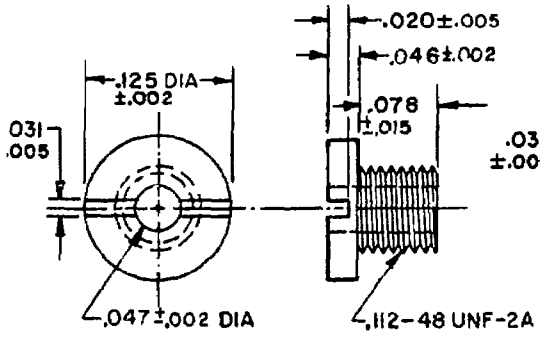

SHELL SCREW

PART NUMBER	M642/12-2

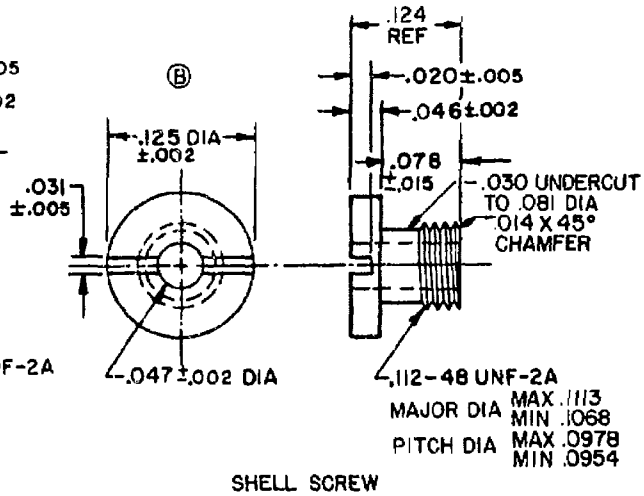

MAJOR DIA MAX .1113 MIN .1068
PITCH DIA MAX .0978 MIN .0954

SHELL SCREW
OPTIONAL SCREW FOR M642/12-2

Ⓑ DENOTES CHANGES

FSC 5935

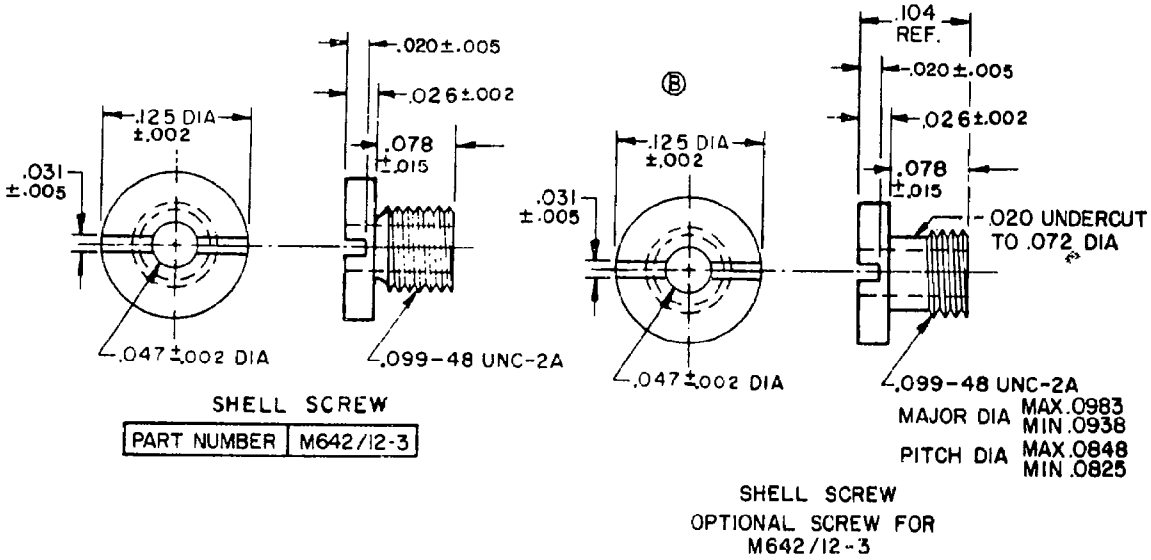

INCHES	MM	INCHES	MM	INCHES	MM
.002	.05	.047	1.19	.0978	2.48
.005	.13	.072	1.83	.0983	2.50
.014	.36	.078	1.98	.099	2.51
.015	.38	.081	2.06	.104	2.64
.020	.51	.0825	2.10	.1068	2.71
.026	.66	.0848	2.15	.1113	2.83
.030	.76	.086	2.18	.112	2.84
.031	.79	.0938	2.38	.124	3.15
.046	1.17	.0954	2.42	.125	3.18
				.144	3.66

NOTES:
1. Dimensions are in inches.
2. Metric equivalents (to the nearest .01 mm) are given for general information only and are based upon 1 inch = 25.4 mm.

REQUIREMENTS:

Dimensions and configuration: See figure.

Screw material: Shall be in accordance with MIL-P-642.

Screw threads: Shall be in accordance with MIL-P-642.

Custodians:
Army - EL
Navy - EC
Air Force - 11

Review activities:
Army - EL, MI, ME, SL, MU
Navy - AS
Air Force - 80
DSA - ES

User activities:
Army - MI, WC, AV
Navy - OS, MC, SH, YD
Air Force - 17

Preparing activity:
Army - EL

Agent:
DSA - ES

(Project 5935-1982)