# MILITARY SPECIFICATION SHEET

## ELECTRON TUBE, KLYSTRON

## TYPE 6310

This specification is approved for use by all Departments and Agencies of the Department of Defense.

The complete requirements for procuring the electron tube described herein shall consist of this document and the latest issue of Specification MIL-E-1.

DESCRIPTION: Reflex oscillator, integral cavity, tunable frequency range 8500 to 10,000 MHz

ABSOLUTE RATINGS:

| Parameter: | Ef | Ers | Er | Irs | Tuner plate | tk | F | Alt |
|---|---|---|---|---|---|---|---|---|
| Unit: | V | Vdc | Vdc | mAdc | T°C | (See note 1) | MHz | ft |
| Maximum: | 7.0 | 350 | -20 to -1,000 | 42 | 200 | -- | 10,000 | 10,000 |
| Minimum: | 5.7 | --- | --- | -- | --- | -- | 8,500 | --- |

PHYSICAL CHARACTERISTICS: (See outline drawing)

---

TEST CONDITIONS:

| Parameter: | Ef | Ers | Er | Tuner plate temperatures | F |
|---|---|---|---|---|---|
| Unit: | V | Vdc | Vdc | °C | MHz |
| | 6.3 | 300 | -55 to -225 | (See notes 2 and 3) | 9,300 ±0.3% |

REQUIREMENT OR TEST:

GENERAL

Qualification - Required

6310

FSC 5960

| METHOD | REQUIREMENT OR TEST | CONDITIONS | SYMBOL | LIMITS MIN | LIMITS MAX | UNIT |
|---|---|---|---|---|---|---|
| | Qualification | | | | | |
| 1031 | Operation vibration (1) | Er(Mode 5)/max Po; 10G, F = 50 to 600 Hz; t = 5 min | ΔF(p-p) | --- | 4 | MHz |
| ---- | Shock | Er(Mode 5)/max Po; G = 200; shock duration = 0.001 sec See notes 5 and 8 | ΔF | --- | 5 | MHz |
| 4280 | Electronic tuning range (2) | Er(Mode 5)/50% max Po; F = 8,500 to 10,000 MHz | ΔF(p-p) | 30 | --- | MHz |
| 4027 | Temperature coefficient | Er(Mode 5)/max Po; TA = 20° to 60°C | ΔF/Δ°C | 0.0 | -0.20 | MHz/°C |
| ---- | Frequency modulation | Er(Mode 5)/max Po; Ef = 5.7 to 7.0 Vdc | ΔF | --- | 0.1 | MHz |
| ---- | Heater voltage coefficient | Ef = 5.7 to 7.0 V | ΔF/ΔEf | --- | 6 | MHz/v |
| 4223 | Mechanical tuning rate | F = 8,500 to 10,000 MHz | ΔF/ΔTuner degrees | 1.8 | 3 | MHz/degree |
| 4250 | Power output (3) | Er(Mode 5)/max Po; F = 8,500 to 10,000 MHz | Po | 25 | --- | mW |
| | Quality conformance inspection, part 1 | | | | | |
| 1031 | Operation vibration (2) | 10G, F = 60, t = 120 See note 4 | Ir | 0 | 10 | μAdc |
| 4229 | ✱ Reflector current | See notes 6 and 7 | Ir | --- | 3 | μAdc |
| 4214 | ✱ Emission | Ef = 5.7 See note 7 | ΔIrs/Irs | --- | -15 | % |
| 4212 | Resonator current | Er(Mode 5)/max Po; | Irs | 20 | 32 | mAdc |
| 4250 | Power output (1) | Er(Mode 5)/max Po; | Po | 25 | --- | mW |
| 4223 | Mechanical tuning range | Er(Mode 5)/max Po; high frequency<br>low frequency | F<br>F | 10,000<br>--- | ---<br>8,500 | MHz<br>MHz |
| 4213 | Reflector voltage (1) | Er(Mode 5)/max Po | Er | -115 | -180 | Vdc |
| ---- | Broadband testing | Er(Mode 5)/max Po; at = 8 db min; See note 9 VSWR = 2.5/1 max. | | | | |

| METHOD | REQUIREMENT OR TEST | CONDITIONS | SYMBOL | LIMITS MIN | LIMITS MAX | UNIT |
|---|---|---|---|---|---|---|
| | Quality conformance inspection, part 2 | | | | | |
| 1301 | Heater current | | If | 1.08 | 1.32 | A |
| 4250 | Power output (2) | Er(Mode 5)/max Po;<br>F = 8,500 ±0.3% MHz;<br>F = 10,000 ±0.3% MHz | <br>Po<br>Po | <br>25<br>25 | <br>--<br>-- | <br>mW<br>mW |
| 4213 | Reflector voltage (2) | Er(Mode 5)/max Po;<br>F = 8,500 ±0.3% MHz;<br>F = 10,000 ±0.3% MHz | <br>Er<br>Er | <br>-85<br>-160 | <br>-135<br>-225 | <br>Vdc<br>Vdc |
| 4280 | Electronic tuning range (1) | Er(Mode 5)/50% max Po | ΔF | 30 | -- | MHz |
| 4231 | Electronic tuning hysteresis | Er(Mode 5)/max Po | Ratio | -- | 0.5 | --- |
| | Quality conformance inspection, part 3 | | | | | |
| 4551 | Life-test | Group C, power output (1) conditions | t | 500 | -- | hr |
| 4551 | Life-test end points: | | | | | |
| 4250 | Power output (1) | Er(Mode 5)/max Po | Po | 20 | -- | mW |
| 4229 | Reflector current | T = 5 min<br>See notes 6 and 7 | Ir | -- | 10 | μAdc |

NOTES:

1. No warmup time is required in order to obtain the specified life from the tube. If extended life is desired, a heater warmup period of approximately 1 minute is recommended before the application of the resonator voltage.

2. All oscillation tests except vibration tests shall be made with the tube rigidly connected to a UG39/U flange on appropriate RG52/U waveguide equipment and the load VSWR for the tube shall be less than 1.1. Forced-air cooling is required for power inputs above 10 watts.

3. The temperature of base and cap of the tube shall not exceed 120°C.

4. The reflector current shall be recorded with a Brush Model BL202 recorder, or equivalent. There shall be no reflector current bursts greater than the limit shown.

5. The tube shall be given five shocks in each of three planes. The frequency shift after shock in one plane shall not exceed the value specified.

6. After 2 minutes with all voltages applied, total reflector current shall not exceed the specified limits.

7. The tube shall not be oscillating during the test.

8. Connection to the tube shall be made with an Amphenol 78-S3S-1001-3 pin connector and a miniature type reflector cap connector, or equivalents. Flexible leads shall be used in making connections to the tube.

NOTES: -Continued

9. Superimposing sufficient 60-hertz a c voltage on the direct reflector voltage to suppress oscillations on the ends of the sweep, the mode curve shall be observed on an oscilloscope whose amplifier has minimum bandpass of 0.1 MHz. With a standing wave introducer inserted, there shall be no discontinuities at the maximum power point for any phase of the standing wave. If the center of the mode is distorted, a wavemeter pip shall not disappear for an interval of the mode center as the wavemeter is tuned to check for a frequency discontinuity.

Custodians:

Army - EL
Navy - EC
Air Force - 85

Review activities:

Army - EL
Navy - SH
Air Force - 80, 84
DSA - ES

User activities:

Army - MU
Navy - MC, CG
Air Force - 11

Preparing activity:

Air Force - 85

(Project No. 5960-2853)

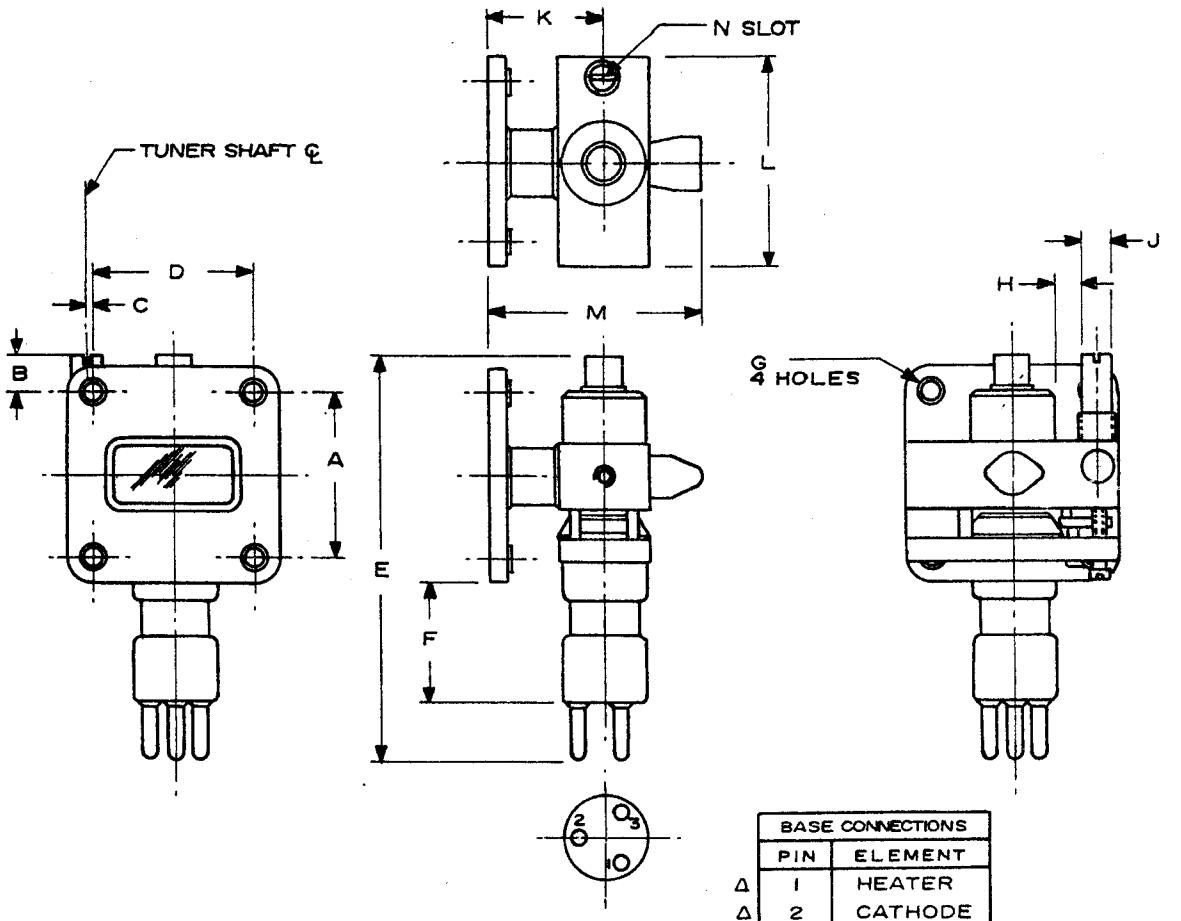


| BASE CONNECTIONS | |
|---|---|
| PIN | ELEMENT |
| Δ 1 | HEATER |
| Δ 2 | CATHODE |
| 3 | HEATER |

Δ 1 & 2 INTERNALLY CONNECTED

| DIMENSIONS | | | | | | | | | |
|---|---|---|---|---|---|---|---|---|---|
| LTR | INCHES | | MILLIMETERS | | LTR | INCHES | | MILLIMETERS | |
| | MIN | MAX | MIN | MAX | | MIN | MAX | MIN | MAX |
| QUALIFICATION | | | | | QUALITY CONFORMANCE INSPECTION, PART 2 | | | | |
| F | | 1.000 | | 25.40 | J | .248 | .250 | 6.30 | 6.35 |
| H | .160 | | 4.06 | | K | .850 | .936 | 21.59 | 23.77 |
| L | | 1.750 | | 44.45 | E | | 3.125 | | 79.38 |
| QUALITY CONFORMANCE INSPECTION, PART 1 | | | | | NOMINAL DIMENSIONS | | | | |
| A | 1.276 | 1.284 | 32.41 | 32.61 | B | .187 | | 4.75 | |
| D | 1.216 | 1.224 | 30.89 | 31.09 | G | .219<br>.185 (REMOVABLE INSERT) | | 5.56<br>4.70 | |
| M | | 1.750 | | 44.45 | | | | | |
| QUALITY CONFORMANCE INSPECTION, PART 2 | | | | | N | .050 WIDE<br>.220 DEEP | | 1.27<br>5.59 | |
| C | .010 | .070 | .25 | 1.78 | | | | | |

NOTES:

1. METRIC EQUIVALENTS (TO THE NEAREST .01 mm) ARE GIVEN FOR GENERAL INFORMATION ONLY AND ARE BASED UPON 1 INCH = 25.4 mm.
2. NOMINAL DIMENSIONS ARE FOR INFORMATION ONLY AND ARE NOT REQUIRED FOR INSPECTION PURPOSES.
3. BASE: PEEWEE 3 PIN, A3-1
4. CAP: C1-4

FIGURE 1. Outline drawing of type 6310