MILITARY SPECIFICATION SHEET

ELECTRON TUBE, THYRATRON

TYPE 884

This specification is approved for use by all Departments and Agencies of the Department of Defense.

The requirements for acquiring the electron tube described herein shall consist of this specification and the latest issue of MIL-E-1.

DESCRIPTION: Triode

Mounting position: Any

Weight: 1.5 ounces (42.5 grams) nominal

Envelope: ST-12 (EIA)

Base: B6-3 (EIA)

Height: 4.125 inches (104.73 mm) maximum

Diameter: 1.563 inches (39.70 mm) maximum

Pin connections:

Pin no.:	1	2	3	5	7	8
Element:	nc	h	a	g	h	k

ABSOLUTE RATINGS:

Parameter:	Ef	epx or epy	Peak voltage between any two electrodes	ib	Ib	Rg	tk	Ehk	TA
Unit:	V	v	v	ma	mAdc (Note 1)	Meg (Note 2)	s	Vdc (Note 3)	°C
Oscillator:									
Maximum:	6.93	300	350	300	2	0.5	30	-100	+95
Minimum:	5.67	---	---	---	---	---	---	---	-60
Rectifier:									
Maximum:	6.93	300	350	300	75	0.5	30	-100	+95
Minimum:	5.67	---	---	---	---	---	---	---	-60
TEST CONDITIONS:	6.3	---	---	---	---	---	30	---	---

GENERAL:

(E) Qualification - Not required

(E) denotes changes

DISTRIBUTION STATEMENT A. Approved for public release; distribution is unlimited.

Method	Requirement or test	Notes	Conditions	Symbol	Limits Min	Limits Max	Unit
	Quality conformance inspection, part 1	4					
3241	Heater current			If	540	660	mA
3201	Critical grid voltage for conduction (1)	5	Eb = 110 Vdc; Rp = 1,700 ohms; Rg = 0.1 Meg	Ec(1)	-9	-16	Vdc
3201	Critical grid voltage for conduction (2)		Eb = 250 Vdc; Rp = 5,600 ohms; Rg = 0.1 Meg	Ec(2)	-21	-31	Vdc

1231	Pulse emission		epp = eggl = 180 ±9.0 v;
			prr = 100 ±5;
			tk = 5 (min);
			Ra = 10 ohms;
			Rp = 20 ohms;
			calibrating resistor = 10 ohms;
			Zm = 7.5;
			t = 3 (max)
				etd	---	69	v

	Quality conformance inspection, part 2						
1031	Low-frequency vibration		No voltages applied	---	---	---	---
1336	Heater-cathode leakage			Ihk	0	20	μAdc
	Quality conformance inspection, part 3						
---	Life test		Group B (see figure 1); t = 500 hours	---	---	---	---
---	Life-test end points:						
3201	Critical grid voltage for conduction (1)		Eb = 110 Vdc; Rp = 1,700 ohms; Rg = 0.1 Meg	Ec(1)	-7.0	-18.0	Vdc
3201	Critical grid voltage for conduction (2)		Eb = 250 Vdc; Rp = 5,600 ohms; Rg = 0.1 Meg	Ec(2)	-19.0	-33.0	Vdc

1231	Pulse emission		epp = eggl = 180 ±9.0 v;
			prr = 100 ±5;
			tk = 5 (min);
			Ra = 10 ohms;
			Rp = 20 ohms;
			calibrating resistor = 10 ohms;
			Zm = 7.5;
			t = 3 (max)
				etd	---	110	v

NOTES:

1. Below 200 Hz, Ib = 3 mAdc (maximum).
2. Grid resistance shall be not less than 1,000 ohms per volt (maximum instantaneous) applied to grid.
3. Peak voltage between any electrode and heater shall not exceed 350 volts.
4. (E) The AQL (percent defective) for all tests listed in QCI, part 1, shall be 0.65, inspection level II.
5. This test shall be the first test performed at the conclusion of the holding period.

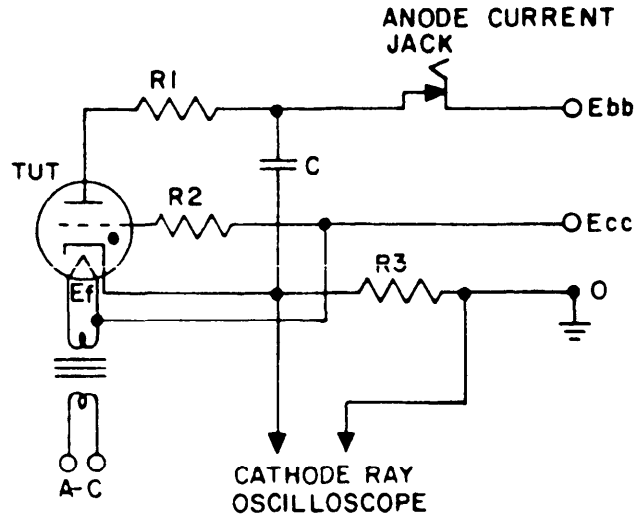

Ebb = 300 Vdc
Ecc = 150 Vdc
R1 = 500 OHMS
R2 = 30,000 OHMS
R3 = 330,000 OHMS
C = 0.005 μF

PEAK VOLTAGE - 136 VOLTS
PEAK CURRENT - 250 ma
FREQUENCY - 1,000 Hz
AVERAGE CURRENT - 0.7 mAdc

FIGURE 1. Relaxation oscillator test circuit.

Custodians:
Army - ER
Navy - EC
Air Force - 85

Review activities:
Air Force - 99
DLA - ES

User activities:
Navy - AS, CG, MC, OS
Air Force - 11

Preparing activity:
Navy - EC

Agent:
DLA - ES

(Project 5960-3356)