PERFORMANCE SPECIFICATION SHEET

ELECTRON TUBE, GAS SWITCHING
TYPE 6564

This specification is approved for use by all Departments and Agencies of the Department of Defense.

The requirements for acquiring the electron tube described herein shall consist of this document and the latest issue of MIL-PRF-1.

DESCRIPTION: Dual T. R. tube (band pass).

Pack in sealed water-vapor-proof bag. If opaque bag is used, the tube type number shall be stamped thereon.

APPLICATION: Used with short-slot hybrid couplers.

DIMENSIONS: See figures 1 and 2.

ABSOLUTE RATINGS:

Parameter:	Transmitter Po	Open circuit ignitor voltage	Altitude
Unit:	Kw	V dc	ft
Maximum:	200	---	10,000
Minimum:	1	-700	---

GENERAL:

The Preproduction sample approval requirements in Signal Corps Drawing SC-A-46600 hereby replace any qualification requirements existing in or otherwise referable to the data in this specification sheet.

(Copies of Signal Corps Drawing SC-A-46600, "Preproduction Sample Approval in Lieu of Qualification Requirements in Specifications," may be obtained from the acquiring activity or as directed by the contracting officer.

DISTRIBUTION STATEMENT A. Approved for public release; distribution is unlimited.

TABLE I. Testing and inspection.

Inspection	Method	Conditions	Symbol	Limits Min	Limits Max	Unit
Qualification						
Dielectric material	4101		---	---	---	---
Degradation due to vibration	4021	G = 10 1/	---	---	---	---
Low level VSWR	4473	F = 8,500 MHz ± 0.1%	δ	---	1.2	---
		F = 8,800 MHz ± 0.1%	δ	---	1.2	---
		F = 9,000 MHz ± 0.1%	δ	---	1.2	---
		F = 9,300 MHz ± 0.1%	δ	---	1.2	---
		F = 9,600 MHz ± 0.1%	δ	---	1.2	---
Insertion loss	4416	F = 8,500 MHz ± 0.1%	---	---	1.0	dB
		F = 8,800 MHz ± 0.1%	---	---	0.8	dB
		F = 9,000 MHz ± 0.1%	---	---	0.8	dB
		F = 9,300 MHz ± 0.1%	---	---	0.8	dB
		F = 9,600 MHz ± 0.1%	---	---	1.0	dB
		Ii = 100 μA dc on each ignitor	---	---	---	---
Transmitter - receiver Isolation	4491	F = 8,500 MHz ± 0.1%	---	15	---	dB
		F = 8,800 MHz ± 0.1%	---	15	---	dB
		F = 9,000 MHz ± 0.1%	---	15	---	dB
		F = 9,300 MHz ± 0.1%	---	15	---	dB
		F = 9,600 MHz ± 0.1%	---	15	---	dB
		Ii = 100 μA dc on each ignitor	---	---	---	---
Ignitor Interaction	4421	Ii = 100 μA dc on each ignitor 2/	---	---	0.1	dB
Ignitor Ignition time	4401	Ebb = -700 V dc; R = 4.0 Meg 3/	t	---	5.0	sec
Ignitor voltage drop	4406	Ii = 100 μA dc on each ignitor 4/	---	-200	-375	V dc
Flat leakage power	4452	F = 9000 MHz ± 0.5 %; po = 40 kw ± 10%; prr = 1,000; tp1 = 1.0 ± 0.1 μs; tp2 = 0.5 ± 0.05 μs; Ii = 100 μA dc on each ignitor	pf	---	20	mw
Spike leakage energy	4452	F = 9,000 MHz ± 0.5%; po = 40 kw ± 10%; prr = 1,000; tp1 = 1.0 ± 0.1 μs; tp2 = 0.5 ± 0.05 μs; Ii = 100 μA dc on each ignitor	Ws	---	0.1	erg
Arc loss	4488	F = 9,000 MHz ± 0.5%; po = 40 kw ± 10%; prr = 1,000; tp = 1.0 ± 0.15 μs	---	---	0.8	dB
Temperature cycle	1027		cycles	1	---	---
Temperature cycling life	1027		cycles	10	---	---

See footnotes at end of table.

TABLE I. Testing and inspection - Continued.

Inspection	Method	Conditions	Symbol	Limits Min	Limits Max	Unit
Recovery time (1)	4471	F = 9,000 MHz ± 0.5%; po = 200 kw ± 10%; tp = 1.0 µs ± 0.05 µs; prr = 1,000; Ii = 100 µA dc on each ignitor	t	---	7.0	µs
Recovery time (2)	4471	F = 9,000 MHz ± 0.5%; po = 65 kw ± 10%; tp = 1.0 µs ± 0.05 µs; prr = 1,000; Ii = 100 µA dc on each ignitor	t	---	3.0	µs
High level VSWR	4474	F = 9,000 MHz ± 0.1%; po = 40 kw ± 10%; tp = 1.0 µs ± 0.05 µs; prr = 1,000; Ii = 100 µA dc on each ignitor	δ	---	1.2	---
Life test	---	F = 9,000 MHz ± 5%; Ii = 100 µA dc on each ignitor po = 200 kw ± 10%; tp = 1.0 µs ± .05 µs; prr = 1,000; Group D	t	500	---	hours
Life test end point:	---	F = 9,000 MHz ± 0.1%				
Recovery time (1)	4471		t	---	10	µs
Recovery time (2)	4471		t	---	5	µs
Flat leakage power	4452		pf	---	20	mw
Spike leakage energy	4452		Ws	---	.15	erg
Insertion loss	4116		---	---	1.0	dB

1/ There shall be no evidence of shorts of the ignitor electrodes as indicated by a short indicator during vibration.

2/ Ignitor interaction is measured with the specified ignitor current adjusted on both ignitor electrodes.

3/ Ignitor ignition time shall be measured separately for each ignitor electrode.

4/ Ignitor voltage drop shall be measured separately for each ignitor electrode.

5/ All measurements that include short-slot hybrids shall be made with gaskets bolted between input and output flanges of tube and mating flanges.

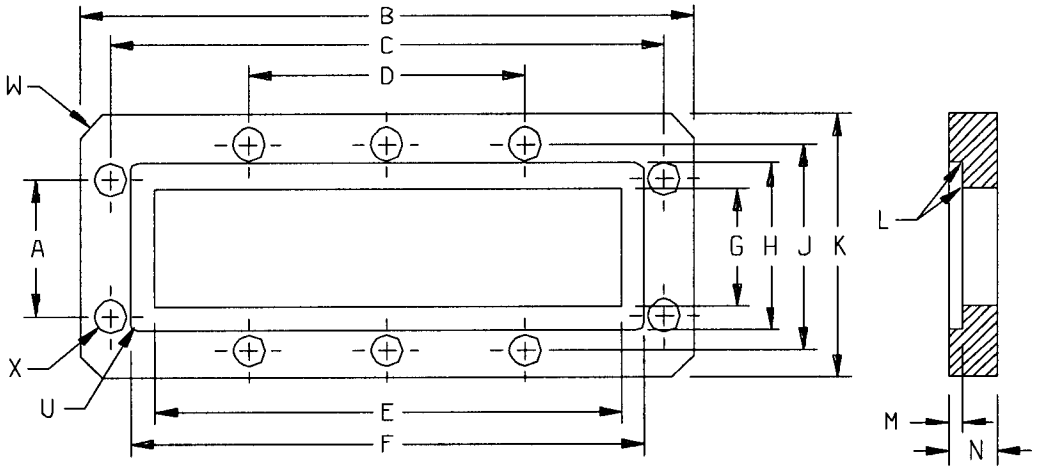

MATING FLANGE

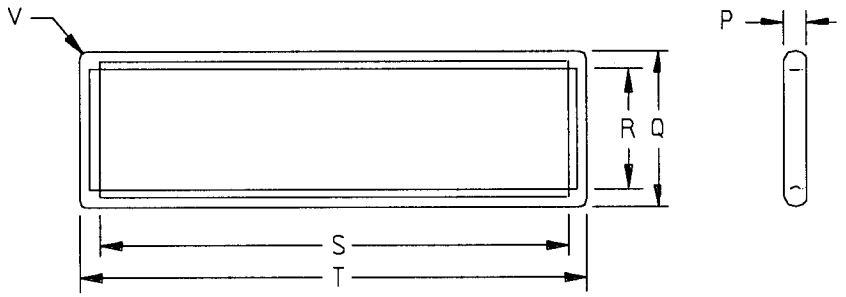

GASKET

Ltr	Dimensions				Ltr	Dimensions			
	Inches		Millimeters			Inches		Millimeters	
	Min	Max	Min	Max		Min	Max	Min	Max
A	.718	.726	18.24	18.44	M	.067	.071	1.70	1.80
B	---	3.210	---	81.53	N	---	.250	---	6.35
C	2.884	2.900	73.25	73.66	P	---	.110 TYP	---	2.79 TYP
D	1.440	1.456	36.58	36.98	Q	---	.831	---	21.11
E	2.439	2.442	61.95	62.03	R	.630	---	16.00	---
F	2.680	2.688	68.07	68.28	S	2.444	---	62.08	---
G	.627	.630	15.93	16.00	T	---	2.647	---	67.23
H	.868	.876	22.05	22.25	U	.044 R	.048 R	1.12 R	1.22 R
J	1.076	1.084	27.33	27.53	V	.044 R	.048 R	1.12 R	1.22 R
K	---	1.380	---	35.05	W	.120 X 45° chamfer or 1.125 R		3.00 x 45° chamfer or 28.6 R	
L	---	.005 R	---	0.13 R	X	.173 drilled (10) holes		4.39 drilled (10) holes	

FIGURE 1. Mating flange and gasket.

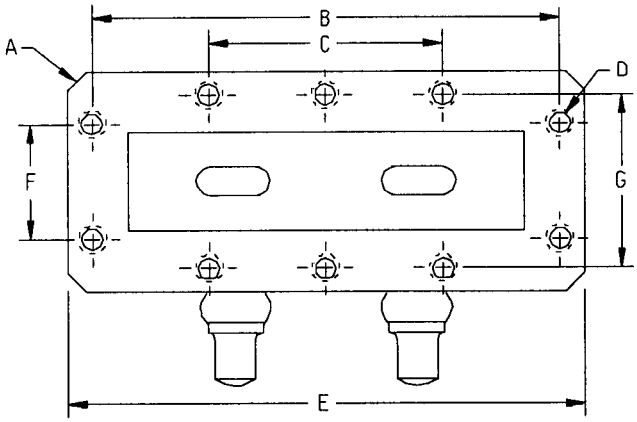

OUTPUT FLANGE

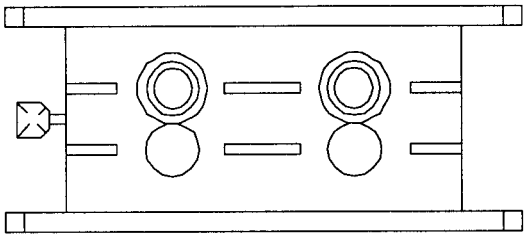

INPUT FLANGE

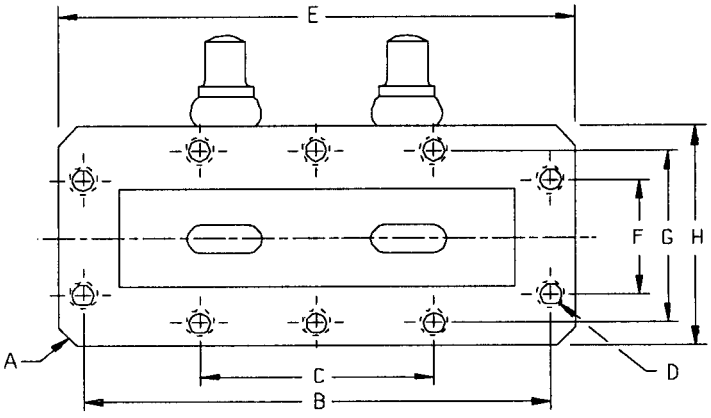

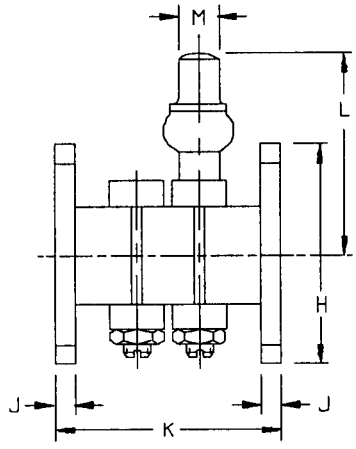

Ltr	Dimensions			
	Inches		Millimeters	
	Min	Max	Min	Max
A	.125 x 45° approx		3.20 x 45° approx	
B	2.887	2.897	73.33	73.58
C	1.443	1.453	36.65	36.91
D	8-32 Tap (M) holes each figure			
E	3.214	3.224	81.64	81.89
F	.717	.727	18.21	18.47
G	1.075	1.085	27.30	27.56
H	1.370	1.380	34.80	35.05
J	.120	.130	3.05	3.30
K	1.262	1.282	32.05	32.56
L	---	1.375	---	34.92
M	.250 Nom		6.35 Nom	

NOTE: Exhaust stem not to extend beyond flange.

FIGURE 2. Input and output flanges.

Custodians:
Army - CR
Air Force - 11
DLA - CC

Review activities:
Army - MI

Preparing activity:
DLA - CC

(Project 5960-A252)