INCH-POUND

MIL-PRF-1/1336G
9 July 2004
SUPERSEDING
MIL-PRF-1/1336F
26 July 1999

PERFORMANCE SPECIFICATION SHEET

ELECTRON TUBE, PULSE MODULATOR
TYPE 3D21WB

This specification is approved for use by all Departments and Agencies of the Department of Defense.

The requirements for acquiring the electron tube described herein shall consist of this document and the latest issue of MIL-PRF-1.

DESCRIPTION: Beam tetrode, vacuum

Outline: See figure 1.

Cathode: Coated unipotential.

Base connections:

Pin No.	1	2	3	4	5	6	7	8	Cap
Element	hct	h	nc	g2	nc	g1	h	k	a

ABSOLUTE RATINGS:

Parameter:	Ef	Eb	Ec1	Ec2	Ehk	Pg1	Ik	Ic1
Unit:	V	V dc	V dc	V dc	v	W	mA dc	mA dc
Maximum:	13.9 or 6.9	4,000 1/	0	850	500	0.5	175	5.0
Minimum:	11.4 or 5.7	---	-200 2/	--- 3/	---	---	---	---
Test condition:	6.3	600	0	300	---	---	---	---

ABSOLUTE RATINGS:

Parameter:	Pp	Pg2	egk	ik	tk	TE	Alt
Unit:	W	W	v	a	sec	°C	ft
Maximum:	40	3.5	220	10	---	300	5/
Minimum:	---	---	---	--- 2/	30	--- 4/	---
Test condition:	---	---	---	---	---	---	---

See footnotes at end of table I.

GENERAL:

Qualification - Required.

TABLE I. Testing and inspection.

Inspection	Method MIL-STD-1311	Conditions	Acceptance Level 13/	Symbol	Limits		Unit
					Min	Max	
Conformance inspection, part 1							
Total grid current	1266	t = 120; Rk = 825 ohms 6/	0.65	Ic1	0	-5.0	µA dc
Electrode current (1) (anode)	1256	Rk = 825 ohms 6/	0.65	Ib	28	37	mA dc
Electrode current (2) (anode)	1256	Ebb = 4,000 V dc; Ecc2 = 800 V dc; Ecc1 = -150 V dc; Rp = 2 MegΩ 7/	0.65	Ib	0	1.0	mA dc
Electrode current (screen)	1256	Rk = 825 ohms	0.65	Ic2	---	3.0	mA dc
Conformance inspection, part 2							
Pulse operation	---	Ebb = 4,000 V dc; Ecc2 = 800 V dc; Ecc1 = -150 V dc; egy = 155 v 7/ 8/	1.0	---	---	---	---
Grid-pulse operation	1356	Ebb = 420 V dc; Ecc2 = 800 V dc; Ecc1 = -150 V dc; egy = 155 v 8/ (test in accordance with figure 4)	1.0	ib	5.0	---	a
Peak screen current	---	Ebb = 420 V dc; Ecc2 = 800 V dc; Ecc1 = -150 V dc; egy = 155 v 8/ (test in accordance with figure 4)	1.0	ic2	---	4.0	a
Peak grid current (1)	---	Ebb = 420 V dc; Ecc2 = 800 V dc; Ecc1 = -150 V dc; egy = 155 v 8/ (test in accordance with figure 4)	1.0	ic1	---	2.0	a
Peak grid current (2)	---	Ebb = 420 V dc; Ecc2 = 800 V dc; Ecc1 = -150 V dc; egy = 52 v 8/	1.0	ic1	30	---	ma

See footnotes at end of table.

TABLE I. Testing and inspection - Continued.

Inspection	Method MIL-STD-1311	Conditions	Acceptance Level 13/	Symbol	Limits Min	Limits Max	Unit
Conformance inspection, part 2 - Continued							
Grid current operation	---	Eb = 250 V dc; Ec2 = 150 V dc; Ec1 = -6 V dc through a 0.5 MegΩ resistor; Ef = 6.5 V 9/	---	Ic1	---	15	µA dc
Low-frequency vibration	1031	Eb = 250 V dc; Ec2 = 100 V dc; Ef = 12.6 V; Ec1 = -10 V dc; Rp = 2,000 ohms	---	Ep	---	500	mV ac
Heater current	1301		---	If	1.55	1.85	A
Transconductance	1306	Rk = 825 ohms	---	Sm	5,000	7,000	µmhos
Heater-cathode leakage	1336	Ehk = 450 V dc	---	Ihk	---	50	µA dc
Direct-interelectrode capacitance	1331	No shield	---	Cgp Cin Cout	--- 13 7.5	1.2 21 12.5	pF pF pF
Shock	1041	450 G; Ehk = 450 V dc; Ec1 = -10 V dc; Rp = 2,000 ohms; Eb = 250 V dc; Ec2 = 100 V dc	15	---	---	---	---
Vibration-fatigue	1031	5 G; F = 50 to 500 Hz; Ef = 6.3 V; no other voltages applied 11/	6.5	---	---	---	---
Shock and vibration-fatigue-test end points	---						
Heater-cathode leakage	1336	Ehk = 450 V dc	---	Ihk	---	100	µA dc
Grid-pulse operation	1356	Ebb = 420 V dc; Ecc2 = 800 V dc Ecc1 = -150 V dc; egy = 155 v 8/ (test in accordance with figure 4)	---	ib	3.75	---	a
Secureness of base, cap, or insert	1101		---	---	---	---	---
Base material insulating quality	1216		---	---	---	---	---

See footnotes at end of table.

TABLE I. Testing and inspection - Continued.

Inspection	Method MIL-STD-1311	Conditions	Acceptance Level 13/	Symbol	Limits Min	Limits Max	Unit
Conformance inspection, part 2 - Continued							
Base pin solder depth	1111		---	---	---	---	---
Permanence of marking	1105		---	---	---	---	---
Conformance inspection, part 3							
Heater-cycling life	1506	Ef = 7.0 V; Ehk = 300 V ac; Ec2 = Eb = 0; 1 minute "on" 4 minutes "off"	---	---	---	---	---
Heater-cycling life-test end points	---						
Heater cathode leakage	1336	Ehk = 450 V dc	---	Ihk	---	150	µA dc
Heater current	1301		---	If	1.4	2.0	A

Life test	---	Group B;
		pulse operation;
		Ebb = 3,500 V dc;
		Ecc2 = 800 V dc;
		eo = 300 v;
		tp = 4 µs;
		prr = 250;
		R1 = 500 ohms ± 5 percent
		12/
			---	---	---	---	---

Life-test end point (500 hours)							
Grid-pulse operation	1356	Ebb = 420 V dc; Ecc2 = 800 V dc; Ecc1 = -150 V dc; egy = 155 v 8/ (test in accordance with figure 4)	---	ib	3.75	---	a

1/ Instantaneous anode voltage due to transient shall not exceed 5,000 volts. Series resistance shall be inserted in the power supply sufficient to limit the short circuit current to less than 0.5 ampere. With a screen potential not exceeding 400 V dc and when no instantaneous voltage due to transient is present (essentially resistance anode load), a maximum anode potential of 4,500 V dc may be used.

2/ Instantaneous negative grid voltage due to transient shall not exceed -500 volts. Series resistance shall be inserted in the power supply sufficient to limit the short circuit current to less than 0.5 ampere.

3/ Series resistance shall be inserted in the power supply sufficient to limit the short circuit current to less than 0.5 ampere.

TABLE I. Testing and inspection - Continued.

4/ Cooling shall be employed if the additive effects of simultaneous operation at high altitude and high dissipation or proximity to other heat sources in the equipment tend to cause the maximum bulb temperature to be exceeded.

5/ See "Reduced pressure (altitude) rating", and altitude, maximum peak voltage in the basic document.

6/ This test shall be performed at the conclusion of the holding period.

7/ The circuit shown on figure 3, or the equivalent, shall be used for high-voltage anode current (2) test and high voltage pulse operation test.

8/ After a minimum preheat fo 30 seconds using Ef = 6.3 volts only, the tube shall be tested under the following conditions: A substantially rectangular pulse with a width of 4 µs and a prr of 250 shall be applied to the grid of the tube under test. Initial arcing may be tolerated, but the tube shall be free of such arcing during final 30 seconds. of a 1-minute test.

9/ All voltages apply simultaneously. There shall be no preheating. The grid current is read after 5 minutes.

10/ This test shall be conducted on the initial lot and thereafter on a lot approximately every 12 months. When one lot has passed, the 12-month rule shall apply. In the event of lot failure, the lot shall be rejected and the succeeding lots shall be subjected to this test until a lot passes (see 13/).

11/ This test shall be performed with an average acceleration level equal to the specified value while being swept through the frequency range of 50 to 500 to 50 Hz. The tubes shall be mounted in each of three planes X, Y, and Z for one-third of the total excitation time. The frequency in Hz shall be scanned continuously up and down through the entire frequency range at the rate of approximately 2 minutes. The total excitation time for the test shall be 96 hours.

12/ The circuit shown on figure 5, or equivalent, shall be used for life-test operation.

13/ This specification sheet uses accept on zero defect sampling in accordance with MIL-PRF-1, table III.

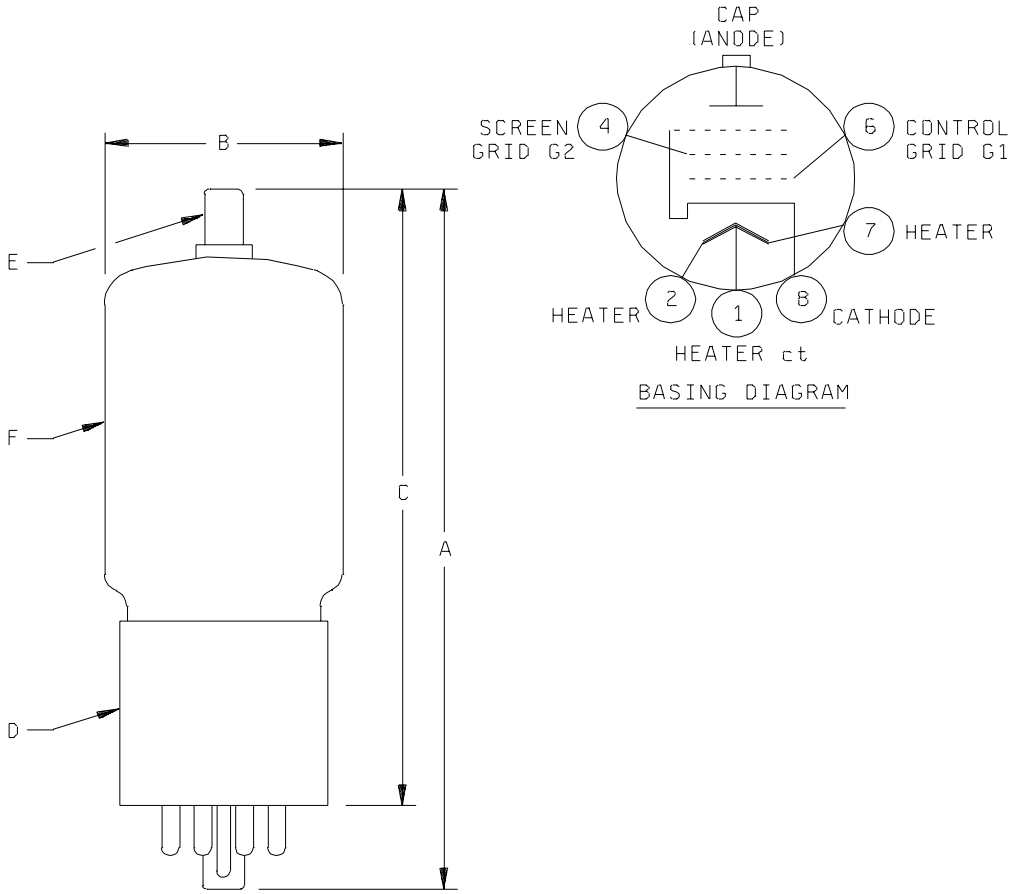

Ltr	Dimensions			
	Inches		Millimeters	
	Min	Max	Min	Max
Conformance inspection, part 2				
A	---	4.688	---	119.08
B	1.438	1.563	36.53	39.70
C	3.750	4.125	95.25	104.78
Conformance inspection, part 3 (periodic check)				
D	Base: B8-11 (low-loss phenolic)			
E	Cap: C1-2			
F	Envelope: T12			

FIGURE 1. Outline drawing of electron tube type 3D21WB.

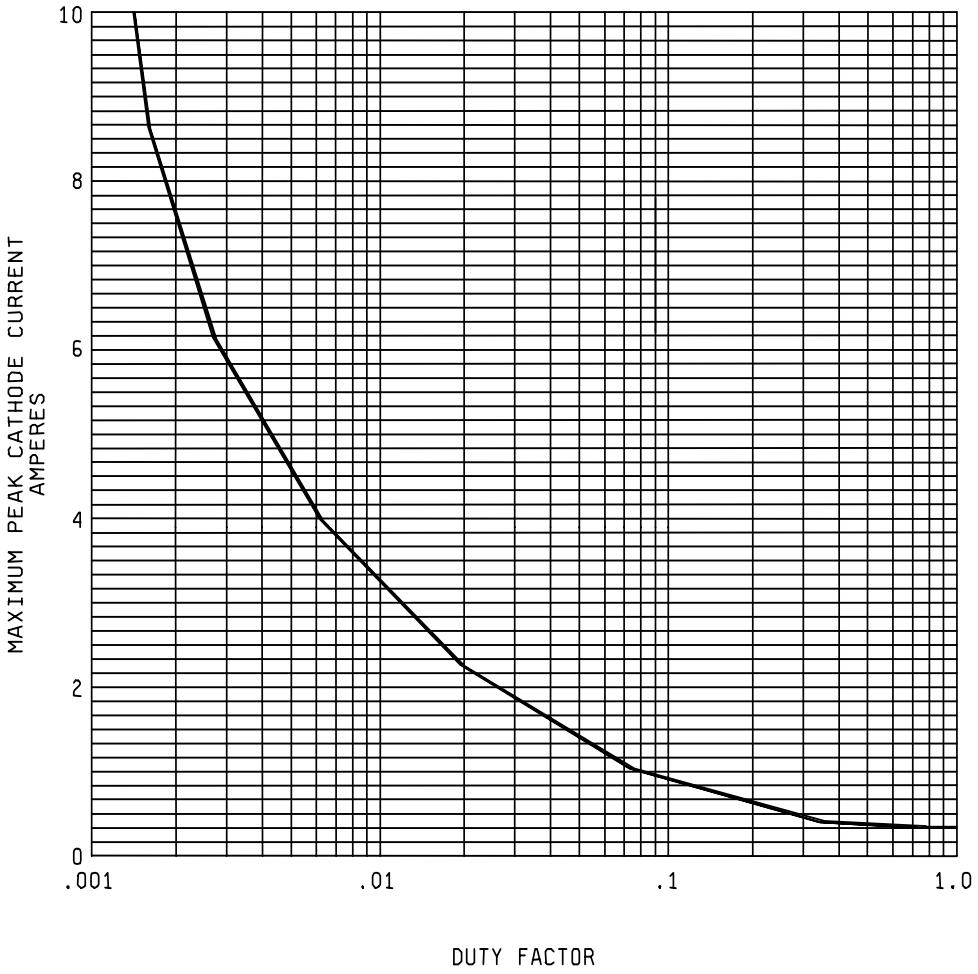

NOTES:

1. Duty factor (10,000 µs averaging time) is defined as the ratio of "on" time in µs to 10,000 µs.
2. "On" time is defined as the sum of the duration of all individual pulses which occur during any 10,000 µs interval.

FIGURE 2. Rating chart.

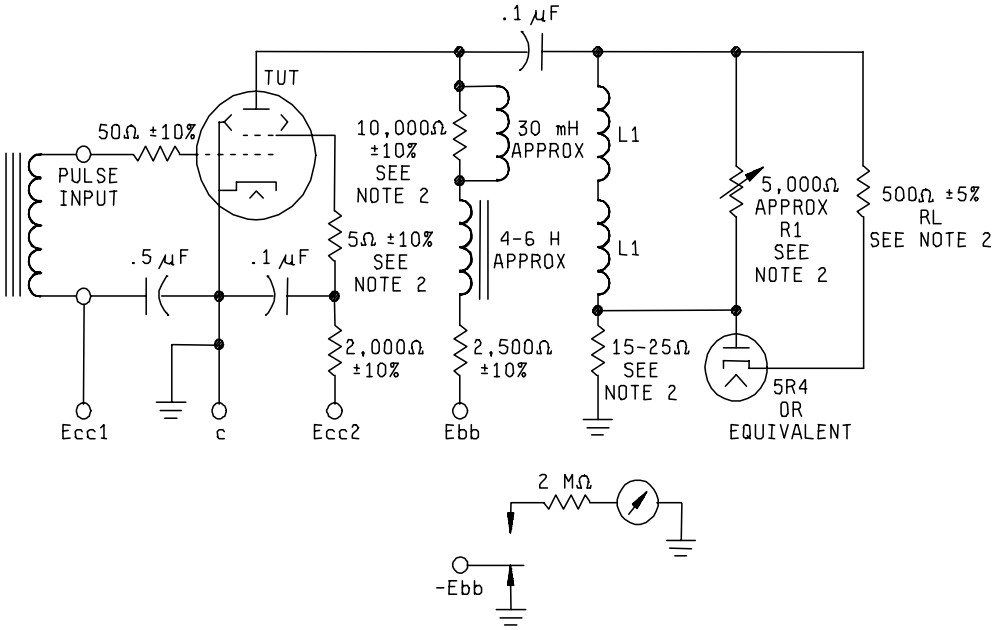

NOTES:

1. L_1 = 5.5 mH approximately (Sickles SC101A, or equivalent.)
2. Use noninductive resistor.
3. Use paper or mica dielectric capacitors.
4. Anode current is read on a microammeter in series with the negative lead of the power supply and is shown at point E. The 2-megohm resistor and meter are inserted in the negative lead as shown for the anode current test only. L_1 and R_1 adjusted for the voltage backswing = 50 percent of forward swing.

FIGURE 3. Test circuit.

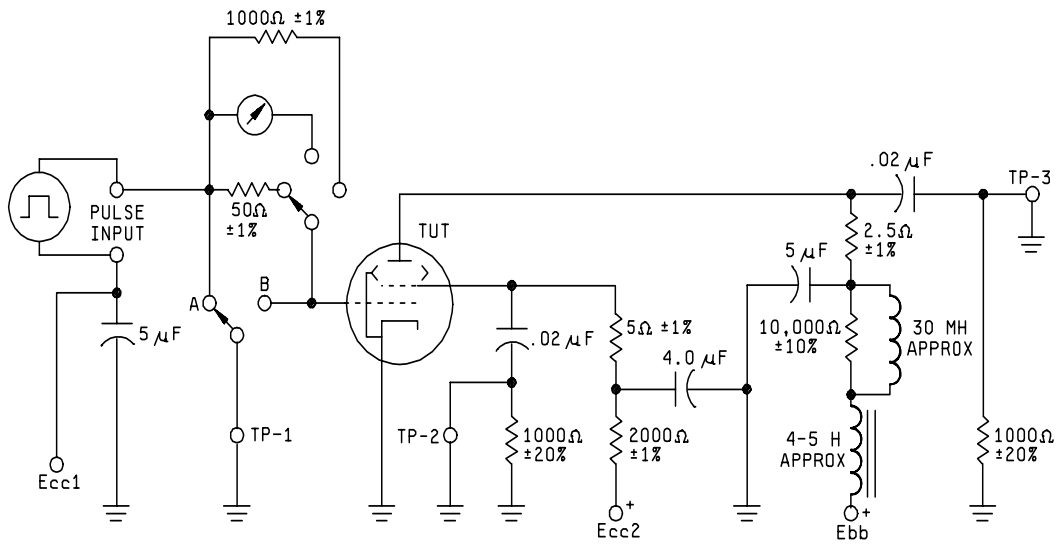

NOTES:

1. Peak anode current (ib) is read on a calibrated oscilloscope across a 2.5-ohm sensing resistor. (TP-3).
2. Peak screen current (ic_2) is read on a calibrated oscilloscope across a 5.0-ohm sensing resistor (TP-2).
3. Peak grid current (1) (ic_1) is read on either a calibrated oscilloscope across a 50-ohm sensing resistor (TP-1) or a milliammeter calibrated for peak reading with duty cycle of 0.001).
4. Peak grid current (2) (ic_1) is read on either a calibrated oscilloscope across a 1,000-ohm sensing resistor (TP-1) or a milliammeter calibrated for peak reading with duty cycle of 0.001).
5. egy = e in switch 'B' position. $$ic_1(1) = \frac{e(switch\ \ position\ A) - e(switch\ \ position\ B)}{50}$$ $$ic_1(2) = \frac{e(switch\ \ position\ A) - e(switch\ \ position\ B)}{1{,}000}$$
6. Use noninductive resistors.
7. All capacitors shall be mica or paper dielectric with suitable voltage ratings. TP-1, TP-2, TP-3 to suitable wide-band oscilloscope with low-capacity probe.

FIGURE 4. Test circuit.

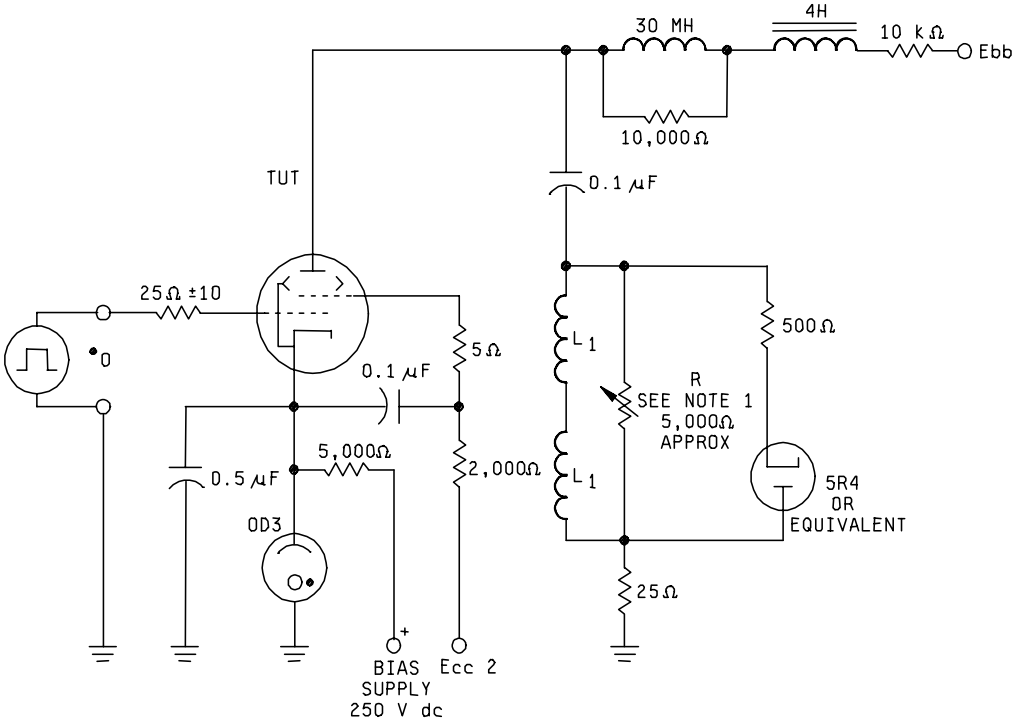

NOTES:
1. Adjust for 50 percent backswing.
2. L1 = 5.5 mH approximate (Sickles SC101A, or equivalent).

FIGURE 5. Test circuit.

NOTES

Referenced documents. In addition to MIL-PRF-1, this specification sheet sheet references MIL-STD-1311.

Changes from previous issue. The margins of this specification are marked with vertical lines to indicate where changes from the previous issue were made. This was done as a convenience only and the Government assumes no liability whatsoever for any inaccuracies in these notations. Bidders and contractors are cautioned to evaluate the requirements of this document based on the entire content irrespective of the marginal notations and relationship to the previous issue.

Custodians:
Army - CR
Navy - EC
Air Force - 11
DLA - CC

Review activities:
Air Force - 99

Preparing activity:
DLA - CC

(Project 5960-3733)

NOTE: The activities listed above were interested in this document as of the date of this document. Since organizations and responsibilities can change, you should verify the currency of the information above using the ASSIST Online database at www.dodssp.daps.mil.