INCH-POUND

MIL-F-15733/2K
27 February 2003
SUPERSEDING
MIL-F-15733/2J
12 December 1988

MILITARY SPECIFICATION SHEET

FILTERS, RADIO FREQUENCY INTERFERENCE, HERMETICALLY SEALED, STYLE FL24

Inactive for new design after 12 December 1988. For new design use MIL-PRF-15733/73. See table II for substitution data.

This specification is approved for use by all Departments and Agencies of the Department of Defense.

The requirements for acquiring the product described herein shall consist of this specification and MIL-PRF-15733.

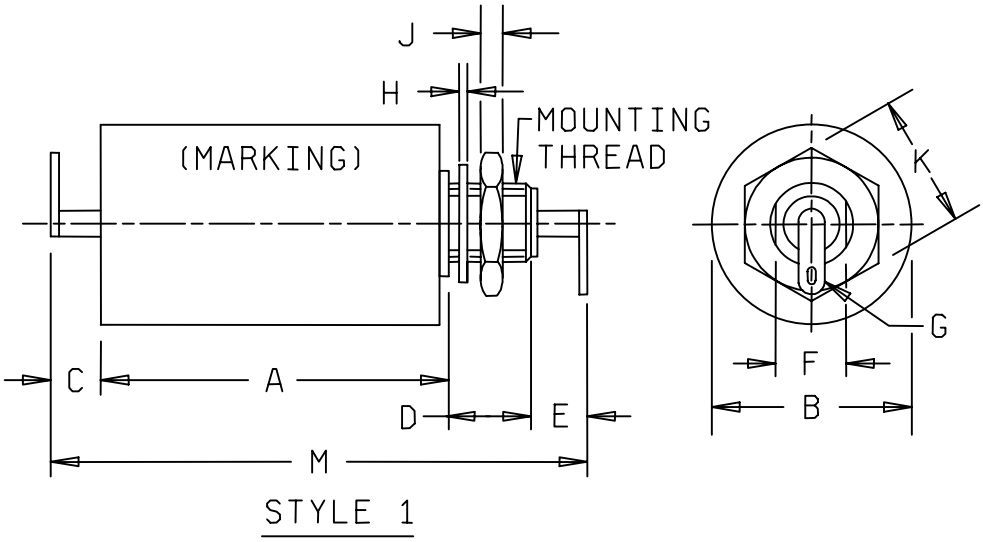

FIGURE 1. Case dimensions and circuit diagram.

DISTRIBUTION STATEMENT A. Approved for public release; distribution is unlimited.

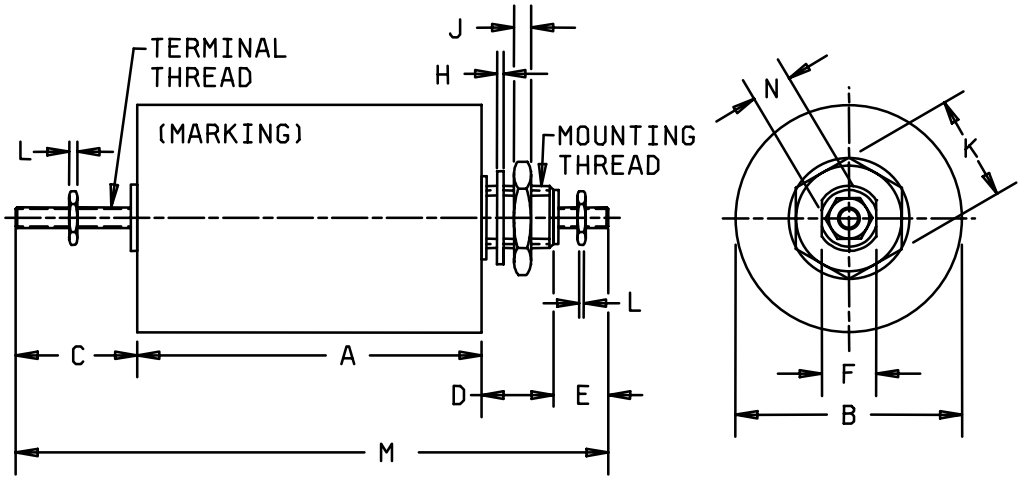

STYLE 2

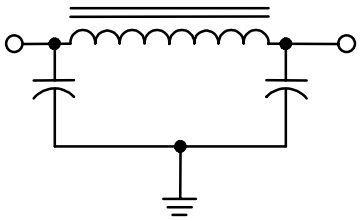

TYPICAL CIRCUIT
DIAGRAMS

FIGURE 1. Case dimensions and circuit diagram - Continued.

Dimensions.

Dash number	A		B		C		D		E		F		G
	Min	Max	Min	Max	Min	Max	Min	Max	Min	Max	Min	Max	
0001	2.500 (63.50)	2.624 (66.64)	.813 (20.65)	.937 (23.80)	.141 (3.58)	.312 (7.92)	.360 (9.14)	.390 (9.90)	.187 (4.75)	.312 (7.92)	.432 (10.97)	.445 (11.30)	.09x.187 (2.3 x 4.75)
0002	3.813 (96.85)	3.937 (100.00)	1.063 (27.00)	1.187 (30.15)	.141 (3.58)	.312 (7.92)	.360 (9.14)	.390 (9.90)	.187 (4.75)	.312 (7.92)	.525 (13.34)	.536 (13.61)	.09x.187 (2.3 x 4.75)
0003	3.813 (96.85)	3.937 (100.00)	1.188 (30.18)	1.312 (33.32)	.141 (3.58)	.312 (7.92)	.360 (9.14)	.390 (9.90)	.125 (3.18)	.312 (7.92)	.650 (16.51)	.660 (16.76)	.093 Dia (2.36) or .09 x .187 (2.3 x 4.75)
0004	4.063 (103.20)	4.187 (106.35)	1.313 (33.35)	1.437 (36.50)	.308 (7.82)	.624 (15.85)	.360 (9.14)	.390 (9.90)	.308 (7.82)	.624 (15.85)	.650 (16.51)	.660 (16.76)	N/A
0005	4.094 (103.99)	4.218 (107.14)	1.438 (36.53)	1.562 (39.67)	.308 (7.82)	.624 (15.85)	.360 (9.14)	.390 (9.90)	.308 (7.82)	.624 (15.85)	.650 (16.51)	.660 (16.76)	N/A
0006	4.063 (103.20)	4.187 (106.35)	2.188 (55.58)	2.312 (58.72)	.312 (7.92)	.440 (11.18)	.495 (12.57)	.505 (12.82)	.312 (7.92)	.440 (15.85)	1.045 (26.54)	1.060 (26.92)	N/A

FIGURE 1. Case dimensions and circuit diagram - Continued.

Dimensions Continued.

Dash number	H		J		K		L		M	Mounting thread	Terminal thread	Terminal style	Max weight lbs	N	
	Min	Max	Min	Max	Min	Max	Min	Max	Max					Min	Max
0001	.017 (.43)	.027 (.69)	.12 (3.1)	.13 (3.3)	.615 (15.62)	.698 (17.73)	NA	NA	3.63 (92.2)	.500-28 UNEF-2A	N/A	1	.19	N/A	N/A
0002	.017 (.43)	.055 (1.40)	.12 (3.1)	.161 (4.09)	.802 (20.37)	.885 (22.47)	NA	NA	4.95 (125.7)	.625-24 UNEF-2A	N/A	1	.46	N/A	N/A
0003	.017 (.43)	.027 (.69)	.12 (3.1)	.161 (4.09)	.928 (23.57)	1.072 (27.23)	NA	NA	4.95 (125.7)	.750-20 UNEF-2A	N/A	1	.6	N/A	N/A
0004	.017 (.43)	.027 (.69)	.12 (3.1)	.161 (4.09)	.928 (23.57)	1.072 (27.23)	.12 (3.1)	.13 (3.3)	5.88 (149.4)	.750-20 UNEF-2A	.190-32 UNF-2A	2	.8	.36 (9.14)	.38 (9.65)
0005	.017 (.43)	.027 (.69)	.12 (3.1)	.161 (4.09)	.928 (23.57)	1.072 (27.23)	.12 (3.1)	.13 (3.3)	5.88 (149.4)	.750-20 UNEF-2A	.190-32 UNF-2A	2	.9	.36 (9.14)	.38 (9.65)
0006	.057 (1.45)	.067 (1.70)	.182 (4.62)	.192 (4.88)	1.615 (41.02)	1.635 (41.53)	.095 (2.41)	.105 (2.67)	6.31 (160.3)	1.125-18 UNEF-2A	.250-28 UNF-2A	2	2.0	.432 (10.97)	.442 (11.23)

NOTES:
1. Dimensions are in inches.
2. Metric equivalents are in parenthesis.
3. Metric equivalents are given for general information only.
4. Mounting hardware shall be supplied with the filter.
5. Circuit diagram is for information only.

FIGURE 1. Case dimensions and circuit diagram - Continued.

REQUIREMENTS:

Dimensions and configuration: See figure 1.

Case: Metal.

Case and mounting hardware finish: In accordance with MIL-PRF-15733. Pure tin finish is prohibited.

Terminals:

Style 1: Solderable.

Style 2: Threaded stud.

Recommended mounting torque:

Thread	Maximum torque (in-lb)		Thread	Maximum torque (in-lb)
.500-28 UNEF-2A	80		1.125-18 UNEF-2A	200
.625-24 UNEF-2A	85		.190-32 UNF-2A	18
.750-20 UNEF-2A	100		.250-28 UNF-2A	40

Weight: See figure 1.

Operating temperature range: -55°C to +85°C.

Rated (power) frequency: 0 to 400 Hz.

Rated voltage: See table I.

Rated current: See table I.

Insertion loss: In accordance with MIL-PRF-15733 and the following:

(at +25°C): See table I.

(at -55°C and +85°C): Insertion loss shall be as specified in table I except that a degradation of 2 dB from the value specified in table I shall be allowed up to 10 MHz.

Seal: In accordance with MIL-PRF-15733.

Temperature rise: +25°C maximum for parts rated up to and including 10 amperes.
+35°C maximum for parts rated above 10 amperes.

Dielectric withstanding voltage: In accordance with MIL-PRF-15733 except the duration of application of voltage shall be 1 to 5 seconds.

Insulation resistance: In accordance with MIL-PRF-15733. Insulation resistance measured between both terminals connected together and the case shall be at least:

<u>Dash numbers</u>
0001 and 0002 - 1,000 megohms
0003, 0004, 0005, and 0006 - 500 megohms

Voltage drop: .5 volt, maximum.

Terminal strength: In accordance with MIL-PRF-15733 and the following:

Style 2: Method 211, MIL-STD-202; test condition E.

Style 1: Method 211, MIL-STD-202; test conditions A (applied force: 5 pounds) and B (5 bends).

TABLE I. Electrical characteristics.

Dash number	Circuit diagram	Rated voltage		Rated current (A)	Minimum insertion loss (dB) in accordance with MIL-STD-220 at +25°C 1/						
		V dc	V ac		.15 MHz	.30 MHz	.60 MHz	1 MHz	10 MHz	100 MHz	1,000 MHz
0001	π	400	125	1	50	60	60	60	60	60	60
0002	π	400	125	5	50	60	60	60	60	60	60
0003	π	400	125	10	50	60	60	60	60	60	60
0004	π	400	125	15	50	60	60	60	60	60	60
0005	π	400	125	20	50	60	60	60	60	60	60
0006	π	400	125	55	50	60	60	60	60	60	60

1/ Full load and no load insertion loss measurements shall be conducted at the specified frequency ranges in MIL-STD-220.

Salt atmosphere (corrosion): In accordance with MIL-PRF-15733 and Method 101, MIL-STD-202; test condition A.

Shock (specified pulse): In accordance with MIL-PRF-15733 and Method 213, MIL-STD-202; test condition I.

Mounting: Filters shall be rigidly mounted by the body.

Insertion loss shall be measured and shall meet initial requirements.

Vibration, high frequency: In accordance with MIL-PRF-15733 and Method 204, MIL-STD-202; test condition D (20g).

Part or identifying number (PIN): M15733/02- (dash number from figure 1 and table I).

Substitution data: See table II.

TABLE II. Substitution data.

Superseded PIN	Superseding PIN
M15733/02-0001	M15733/73-0037
M15733/02-0002	M15733/73-0042
M15733/02-0003	M15733/73-0045
M15733/02-0004	M15733/73-0048
M15733/02-0005	M15733/73-0048
M15733/02-0006	M15733/73-0052

Changes from previous issue. Marginal notations are not used in this revision to identify changes with respect to the previous issue due to the extensiveness of the changes.

Custodians:
Army - CR
Navy - EC
Air Force – 11
DLA - CC

Review activities:
Army - AR, AT, AV, MI
Navy - AS, MC, OS, SH
Air Force - 19, 99

Preparing activity:
DLA - CC

(Project 5915-0412-02)