MIL-S-19500/102A
29 December 1966
SUPERSEDING
MIL-S-19500/102(NAVY)
19 July 1962
(See 6.2)

MILITARY SPECIFICATION

SEMICONDUCTOR DEVICE, TRANSISTORS, NPN, SILICON, HIGH-POWER

TYPES 2N1016B, 2N1016C, AND 2N1016D

This specification is mandatory for use by all Departments and Agencies of the Department of Defense.

1. SCOPE

1.1 Scope. This specification covers the detail requirements for a high-power, NPN, silicon transistor.

1.2 Physical dimensions. See figure 1.

1.3 Maximum ratings.

Type	P_C 1/ $T_C = 45°C$	V_{CBO}	V_{EBO}	V_{CEO}	I_C	T_{stg}	T_J
	W	Vdc	Vdc	Vdc	Adc	°C	°C
2N1016B	150	100	25	100	7.5	-65 to +150	+150
2N1016C	150	150	25	150	7.5	-65 to +150	+150
2N1016D	150	200	25	200	7.5	-65 to +150	+150

1/ Derate linearly 1.428 W/°C for $T_C > 45°C$.

1.4 Primary electrical characteristics.

	h_{FE} $I_C = 2.0$ Adc $V_{CE} = 4.0$ Vdc	h_{FE} $I_C = 5.0$ Adc $V_{CE} = 4.0$ Vdc	h_{fe} $I_C = 5.0$ Adc $V_{CE} = 4.0$ Vdc	$V_{CE}(sat)$ $I_C = 5.0$ Adc $I_B = 1.0$ Adc	f_{hfe} $I_C = 5.0$ Adc $V_{CE} = 4.0$ Vdc	θ_{J-C}
				Vdc	kc	°C/W
Min.	20	10	5	---	20	---
Max.	80	35	---	2.5	---	0.7

2. APPLICABLE DOCUMENTS

2.1 The following documents, of the issue in effect on date of invitation for bids or request for proposal, form a part of the specification to the extent specified herein.

SPECIFICATION

MILITARY

MIL-S-19500 - Semiconductor Devices, General Specification for.

STANDARDS

MILITARY

MIL-STD-202 - Test Methods for Electronic and Electrical Component Parts.

MIL-STD-750 - Test Methods for Semiconductor Devices.

(Copies of specifications, standards, drawings, and publications required by suppliers in connection with specific procurement functions should be obtained from the procuring activity or as directed by the contracting officer.)

2.2 Other publications. The following document forms a part of this specification to the extent specified herein. Unless otherwise indicated, the issue in effect on date of invitation for bids or request for proposal shall apply.

NATIONAL BUREAU OF STANDARDS

Handbook H28 - Screw-Thread Standards for Federal services.

(Application for copies should be addressed to the Superintendent of Documents, Government Printing Office, Washington, D. C. 20402.)

3. REQUIREMENTS

3.1 General. Requirements shall be in accordance with MIL-S-19500, and as specified herein.

3.2 Abbreviations, symbols, and definitions. The abbreviations, symbols, and definitions used herein are defined in MIL-S-19500.

3.3 Design, construction, and physical dimensions. Transistors shall be of the design, construction, and physical dimensions shown on figure 1.

3.4 Performance characteristics. Performance characteristics shall be as specified in tables I, II, and III.

3.5 Marking. The following marking specified in MIL-S-19500 may be omitted from the body of the transistor at the option of the manufacturer:

(a) Country of origin.
(b) Manufacturer's identification.

4. QUALITY ASSURANCE PROVISIONS

4.1 Sampling and inspection. Sampling and inspection shall be in accordance with MIL-S-19500, and as specified herein.

4.2 Qualification inspection. Qualification inspection shall consist of the examinations and tests specified in tables I, II, and III.

4.3 Quality conformance inspection. Quality conformance inspection shall consist of groups A, B, and C inspections.

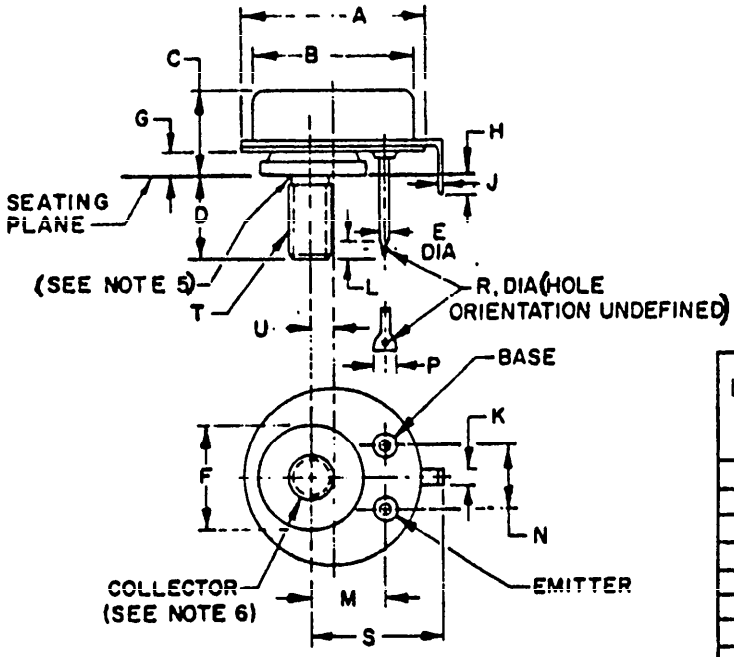

Ltr	Dimensions in inches with metric equivalents (mm) in parentheses (see note 2)		Notes
	Minimum	Maximum	
A	1.24 (31.50)	1.28 (32.51)	
B		1.130 (28.70)	
C	.50 (12.70)	.56 (14.22)	
D	.55 (13.97)	.58 (14.73)	
E	.045 (1.14)	.055 (1.40)	4
F	.73 (18.54)	.77 (19.56)	
G	.11 (2.79)	.14 (3.56)	
H	.13 (3.30)	.19 (4.83)	
J	.014 (.36)	.024 (.61)	
K	.14 (3.56)	.17 (4.32)	
L	.10 (2.54)	.14 (3.56)	
M	.48 (12.19)	.52 (13.21)	
N	.35 (8.89)	.40 (10.16)	
P	.09 (2.29)	.11 (2.79)	4
R	.050 (1.27)	.060 (1.52)	
S	.81 (20.57)	.85 (21.59)	
T			3
U	.14 (3.56)	.17 (4.32)	

NOTES:
1. Dimensions are in inches.
2. Metric equivalents (to the nearest .01 mm) are given for general information only and are based upon 1 inch = 25.4 mm.
3. See NBS Handbook H28. 5/16 - 24 UNF-2A.
4. Two leads.
5. Reference point for temperature measurement.
6. Collector shall be internally connected to the mounting base.

FIGURE 1. Outline dimensions of transistor types 2N1016B, 2N1016C and 2N1016D.

4.3.1 Group A inspection. Group A inspection shall consist of the examinations and tests specified in table I.

4.3.2 Group B inspection. Group B inspection shall consist of the examinations and tests specified in table II.

4.3.3 Group C inspection. Group C inspection shall consist of the examinations and tests specified in table III. This inspection shall be conducted on the initial lot and thereafter every 6 months during production. Upon failure of any Group C subgroups or upon determination by the inspector that Group C tests are not being met, the inspector shall require lot by lot inspection for a minimum of 3 consecutive lots on the failing Group C subgroups.

4.3.4 Group B and group C life-test samples. Samples that have been subjected to group B, 340-hours life-test, may be continued on test for 1,000-hours in order to satisfy group C life-test requirements. These samples shall be predesignated, and shall remain subjected to the group C 1,000-hour acceptance evaluation after they have passed the group B, 340-hour acceptance criteria. The cumulative total of failures found during 340-hour test and during the subsequent interval up to 1,000 hours shall be computed for 1,000 hour acceptance criteria, see 4.3.3.

4.4 Methods of examination and test. Methods of examination and test shall be as specified in tables I, II, and III.

4.4.1 Terminal strength (stud torque). Acceptance criteria after the stud torque test for external threaded parts (dimension "T" of figure 1) shall be in accordance with handbook H28.

4.4.2 Solderability. The solderability test shall apply to the two, lug-terminals only. The depth of immersion is to be within 1/4-inch of the seating plane. Acceptance criteria shall be that each termination is 95-percent covered by a continuous new solder coating to within 3/8-inch ± 1/32-inch of the seating plane.

TABLE I. Group A inspection.

Examination or test	MIL-STD-750		LTPD	Symbol	Limits		
	Method	Details			Min	Max	Unit
Subgroup 1			10				
Visual and mechanical examination	2071			---	---	---	---
Subgroup 2			5				
Breakdown voltage, collector to emitter	3011	Bias cond. D; I_C = 200 mAdc		BV_{CEO}			
2N1016B					100	---	Vdc
2N1016C					150	---	Vdc
2N1016D					200	---	Vdc
Collector to emitter cutoff current	3041	Bias cond. A; V_{EB} = 1.5 Vdc		I_{CEX}			
2N1016B		V_{CE} = 100 Vdc			---	1.0	mAdc
2N1016C		V_{CE} = 150 Vdc			---	1.0	mAdc
2N1016D		V_{CE} = 200 Vdc			---	1.0	mAdc
Collector to base cutoff current	3036	Bias cond. D		I_{CBO}			
2N1016B		V_{CB} = 100 Vdc			---	1.0	mAdc
2N1016C		V_{CB} = 150 Vdc			---	1.0	mAdc
2N1016D		V_{CB} = 200 Vdc			---	1.0	mAdc

TABLE I. Group A inspection - Continued

Examination or test	MIL-STD-750		LTPD	Symbol	Limits		
	Method	Details			Min	Max	Unit
Subgroup 2 - Continued							
Emitter to base cutoff current	3061	Bias cond. D; V_{EB} = 25 Vdc		I_{EBO}	---	1.0	mAdc
Forward-current transfer ratio	3076	V_{CE} = 4 Vdc; I_C = 2 Adc		h_{FE}	20	80	---
Forward-current transfer ratio	3076	V_{CE} = 4 Vdc; I_C = 5 Adc		h_{FE}	10	35	---
Forward-current transfer ratio	3076	V_{CE} = 4 Vdc; I_C = 7.5 Adc		h_{FE}	6	20	---
Small-signal short-circuit forward-current transfer ratio	3206	V_{CE} = 4 Vdc; I_C = 5 Adc		h_{fe}	5	---	---
Small-signal short-circuit forward-current transfer-ratio cutoff frequency	3301	V_{CE} = 4 Vdc; I_C = 5 Adc		f_{hfe}	20	---	kc
Subgroup 3			5				
Collector to emitter voltage (saturated)	3071	I_C = 5 Adc; I_B = 1 Adc		$V_{CE}(sat)$	---	2.5	Vdc
Base emitter voltage (saturated)	3066	Test cond. A; I_C = 5 Adc; I_B = 1 Adc		$V_{BE}(sat)$	---	4.0	Vdc
Pulse response	---	I_C = 5 Adc; V_{EB} = 6 Vdc; V_{CE} = 12 Vdc; I_{B1} and I_{B2} = 1.5 Adc (see figure 2)		$t_d + t_r$	---	10	µsec
Pulse response	---	I_C = 5 Adc; V_{EB} = 6 Vdc; V_{CE} = 12 Vdc; I_{B1} and I_{B2} = 1.5 Adc (see figure 2)		$t_s + t_f$	---	15	µsec
Subgroup 4			5				
High-temperature operation: Emitter to base cutoff current	3061	T_C = +150 ±3°C Bias cond. D; V_{EB} = 25 Vdc		I_{EBO}	---	10	mAdc
Collector to emitter cutoff current	3041	Bias cond. A; V_{EB} = 1.5 Vdc		I_{CEX}			
2N1016B		V_{CE} = 100 Vdc			---	10	mAdc
2N1016C		V_{CE} = 150 Vdc			---	10	mAdc
2N1016D		V_{CE} = 200 Vdc			---	10	mAdc
Low-temperature operation: Forward-current transfer ratio	3076	T_C = -55 ±3°C V_{CE} = 4 Vdc; I_C = 5 Adc		h_{FE}	10	35	---

TABLE II. Group B inspection

Examination or test	MIL-STD-750		LTPD	Symbol	Limits		
	Method	Details			Min	Max	Unit
Subgroup 1			20				
Physical dimensions	2066	(See figure 1)		---	---	---	---
Subgroup 2			15				
Solderability	2026	Omit aging (see 4.4.2)		---	---	---	---
Thermal shock (temperature cycling)	1051	Test cond. F		---	---	---	---
Thermal shock (glass strain)	1056	Test cond. A		---	---	---	---
Terminal strength (tension)	2036	Test cond. A; weight = 5 lbs + 1 oz.; application time = 15 sec. to each terminal		---	---	---	---
Terminal strength (terminal torque)	2036	Test cond. D1; torque = 5 oz.-in. to be applied to flat of each terminal for t = 15 sec.		---	---	---	---
Terminal strength (stud torque)	2036	Test cond. D2; torque = 40 lb.-in. for t = 15 sec. (see 4.4.1)		---	---	---	---
Seal (leak rate)	---	Method 112, MIL-STD-202, test cond. C, procedure III; test cond. A for gross leaks		---	---	5×10^{-7}	atm cc/sec
Moisture resistance	1021	Omit initial conditioning		---	---	---	---
End points:							
Collector to emitter cutoff current	3041	Bias cond. A; V_{EB} = 1.5 Vdc		I_{CEX}			
2N1016B		V_{CE} = 100 Vdc			---	1.0	mAdc
2N1016C		V_{CE} = 150 Vdc			---	1.0	mAdc
2N1016D		V_{CE} = 200 Vdc			---	1.0	mAdc
Collector to emitter voltage (saturated)	3071	I_C = 5 Adc; I_B = 1 Adc		$V_{CE(sat)}$	---	2.5	Vdc
Forward-current transfer ratio	3076	V_{CE} = 4 Vdc; I_C = 5 Adc		h_{FE}	10	35	---
Subgroup 3			15				
Shock		Nonoperating; 500 G; for 1.0 msec; 5 blows in each orientation: X_1, Y_1, Y_2, and Z_1		---	---	---	---
Vibration fatigue	2046	Nonoperating		---	---	---	---
Vibration, variable frequency	2056			---	---	---	---

TABLE II. Group B inspection - Continued

Examination or test	MIL-STD-750		LTPD	Symbol	Limits		
	Method	Details			Min	Max	Unit
Subgroup 3 - Continued							
Constant acceleration	2006	5000 G; in each orientation: X_1, Y_1, Y_2, and Z_1		---	---	---	---
End points: (Same as subgroup 2)							
Subgroup 4			15				
Salt atmosphere (corrosion)	1041			---	---	---	---
End points: (Same as subgroup 2)							
Subgroup 5			10				
High-temperature life (nonoperating)	1031	T_{stg} = 150° C; t = 340 hours (see 4.3.4)		---	---	---	---
End points:							
Collector to emitter cutoff current	3041	Bias cond. A; V_{EB} = +1.5 Vdc		I_{CEX}			
2N1016B		V_{CE} = 100 Vdc			---	2.0	mAdc
2N1016C		V_{CE} = 150 Vdc			---	2.0	mAdc
2N1016D		V_{CE} = 200 Vdc			---	2.0	mAdc
Collector to emitter voltage (saturated)	3071	I_C = 5 Adc; I_B = 1 Adc		V_{CE}(sat)	---	2.5	Vdc
Forward-current transfer ratio	3076	V_{CE} = 4 Vdc; I_C = 5 Adc		h_{FE}	8	42	---
Subgroup 6			10				
Steady state operation life	1026	T_C = +100° C; V_{CB} = 30 Vdc; I_C = 2.39 Adc; t = 340 hrs (see 4.3.4)		---	---	---	---
End points: (Same as subgroup 5)							

TABLE III. Group C inspection

Examination or test	MIL-STD-750		LTPD	Symbol	Limits		
	Method	Details			Min	Max	Unit
Subgroup 1			15				
Barometric pressure, reduced (altitude operation)	1001	Normal mounting; pressure = 8 mm Hg for 60 sec min.		---	---	---	---
Measurement during test:							
Collector to base cutoff current	3036	Bias cond. D;		I_{CBO}			
2N1016B		V_{CB} = 100 Vdc			---	1.0	mAdc
2N1016C		V_{CB} = 150 Vdc			---	1.0	mAdc
2N1016D		V_{CB} = 200 Vdc			---	1.0	mAdc
Thermal resistance, junction to case	3151			θ_{J-C}	---	0.7	°C/W
Subgroup 2			λ = 10				
High-temperature life (nonoperating)	1031	T_{stg} = +150° C (see 4.3.4)		---	---	---	---
End points: (Same as subgroup 5 of Group B)							
Subgroup 3			λ = 10				
Steady state operation life	1026	T_C = +100° C; V_{CB} = 30 Vdc; I_C = 2.39 Adc (see 4.3.4)		---	---	---	---
End points: (Same as subgroup 5 of Group B)							

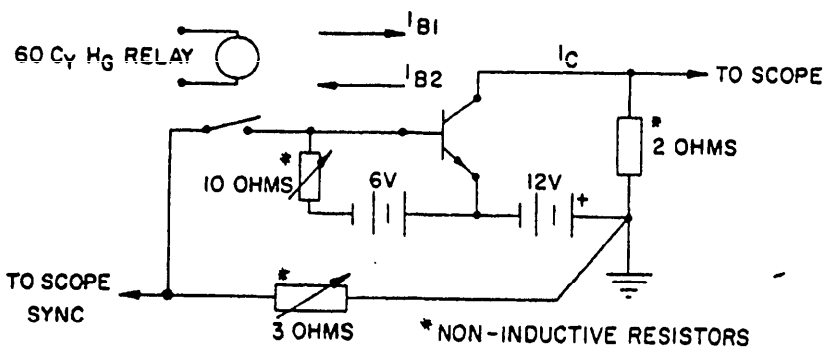

FIGURE 2. Switching-time test circuit.

5. PREPARATION FOR DELIVERY

5.1 See MIL-S-19500, section 5.

6. NOTES

6.1 Notes. The notes specified in MIL-S-19500 are applicable to this specification.

6.2 Changes from previous issue. Asterisks are not used in this revision to identify changes with respect to the previous issue, due to the extensiveness of the changes.

Custodians:
Army - EL
Navy - SH
Air Force - 11

Review activities:
Army - EL, MI, MU
Navy - SH
Air Force - 11, 17, 85

User activities:
Army - EL, SM
Navy - CG, MC, AS, OS
Air Force - 14, 19

Preparing activity:
Navy - SH

(Project 5961-0002-28)

Code "C"