MIL-S-19500/120C
15 April 1970
SUPERSEDING
MIL-S-19500/120B
26 June 1963

MILITARY SPECIFICATION

SEMICONDUCTOR DEVICE, TRANSISTOR, NPN, SILICON, SWITCHING, LOW-POWER

TYPE 2N706

This specification is mandatory for use by all Departments and Agencies of the Department of Defense.

1. SCOPE

1.1 Scope. This specification covers the detail requirements for NPN, silicon, switching, low-power transistor.

1.2 Physical dimensions. See figure 1 (TO-18)

1.3 Maximum ratings.

P_T 1/ $T_A = 25°C$	V_{CBO}	V_{EBO}	V_{CEO}	V_{CER}	T_{stg}
mW	Vdc	Vdc	Vdc	Vdc	°C
300	25	5.0	15	20	-65 to +200

1/ Derate linearly 2.0 mW/°C for $T_A > 25°C$.

1.4 Primary electrical characteristics.

	h_{FE}	$\lvert h_{fe} \rvert$	$V_{CE}(sat)$	$V_{BE}(sat)$	Switching		
	$I_C = 10$ mAdc $V_{CE} = 1.0$ Vdc	$I_C = 10$ mAdc $V_{CE} = 10$ Vdc f = 100 MHz	$I_C = 10$ mAdc $I_B = 1.0$ mAdc	$I_C = 10$ mAdc $I_B = 1.0$ mAdc	t_s	t_{on}	t_{off}
			Vdc	Vdc	nsec	nsec	nsec
Min	30	2.0	---	0.7	5.0	---	---
Max	120	7.0	0.5	0.9	35	40	75

2. APPLICABLE DOCUMENTS

2.1 The following documents, of the issue in effect on date of invitation for bids or request for proposal, form a part of the specification to the extent specified herein.

SPECIFICATION

MILITARY

MIL-S-19500 - Semiconductor Devices, General Specification for.

FSC 5961

STANDARDS

MILITARY

MIL-STD-202 - Test Methods for Electronic and Electrical Component Parts.
MIL-STD-750 - Test Methods for Semiconductor Devices.
MIL-STD-1276 - Leads, Weldable, for Electronic Component Parts.

(Copies of specifications, standards, drawings, and publications required by suppliers in connection with specific procurement functions should be obtained from the procuring activity or as directed by the contracting officer.)

3. REQUIREMENTS

3.1 General. Requirements shall be in accordance with MIL-S-19500, and as specified herein.

3.2 Abbreviations, symbols, and definitions. The abbreviations, symbols, and definitions used herein are defined in MIL-S-19500.

3.3 Design, construction, and physical dimensions. Transistors shall be of the design, construction, and physical dimensions shown on figure 1.

3.3.1 Lead material and finish. The lead material shall be Type K (Kovar) or Type F (Alloy 52) conforming to requirements in MIL-STD-1276. The use of a nickel under-plating is optional; if used, it will be 100 microinches maximum. The finish shall be gold (as specified in MIL-STD-1276); however, if so specified in the contract or order, the finish may be tin-coated over gold. This tin-finish requirement shall not be construed as adversely affecting the qualified-product status of the device, or applicable JAN marking (see 6.2).

3.3.1.1 Selectivity of lead material. If lead material need be specified, it shall be specified in the contract or order (see 6.2).

3.4 Performance characteristics. Performance characteristics shall be as specified in tables I, II, and III.

3.5 Marking. The following marking specified in MIL-S-19500 may be omitted from the body of the transistor at the option of the manufacturer: Manufacturer's identification.

4. QUALITY ASSURANCE PROVISIONS

4.1 Sampling and inspection. Sampling and inspection shall be in accordance with MIL-S-19500 and as specified herein.

4.2 Qualification inspection. Qualification inspection shall consist of the examinations and tests specified in tables I, II, and III.

4.3 Quality conformance inspection. Quality conformance inspection shall consist of group A, B, and C inspections.

4.3.1 Group A inspection. Group A inspection shall consist of the examinations and tests specified in table I.

4.3.2 Group B inspection. Group B inspection shall consist of the examinations and tests specified in table II.

4.3.3 Group C inspection. Group C inspection shall consist of the examinations and tests specified in table III. This inspection shall be conducted on the initial lot and thereafter every 6 months during production.

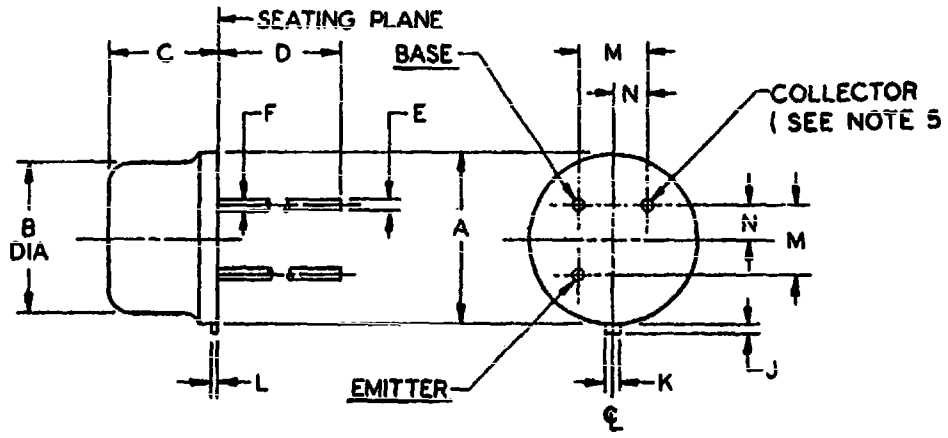

LTR	DIMENSIONS				NOTES
	INCHES		MILLIMETERS		
	MIN	MAX	MIN	MAX	
A	.209	.230	5.31	5.84	
B	.178	.195	4.52	4.95	
C	.170	.210	4.32	5.33	
D	.500	.750	12.70	19.05	7
E	.016	.021	.41	.53	2,7
F	.016	.019	.41	.48	3,7
J	.028	.048	.71	1.22	6
K	.036	.046	.91	1.17	
L	---	.020	---	.51	
M	.0707 Nom		1.80 Nom		4
N	.0354 Nom		.90 Nom		4

NOTES:
1. Metric equivalents (to the nearest .01 mm) are given for general information only and are based upon 1 inch = 25.4 mm.
2. Measured in the zone beyond .250 (6.35 mm) from the seating plane.
3. Measured in the zone .050 (1.27 mm) and .250 (6.35 mm) from the seating plane.
4. When measured in a gaging plane .054 +.001, −.000 (1.37 +.03, −.00 mm) below the seating plane of the transistor maximum diameter leads shall be within .007 (.18 mm) of their true location relative to a maximum width tab. Smaller diameter leads shall fall within the outline of the maximum diameter lead tolerance. Figure 2 is the preferred measured method.
5. The collector shall be electrically connected to the case.
6. Measured from the maximum diameter of the actual device.
7. All 3 leads (see 3.3.1).

* FIGURE 1. Physical dimensions of transistor type 2N706 (TO-18).

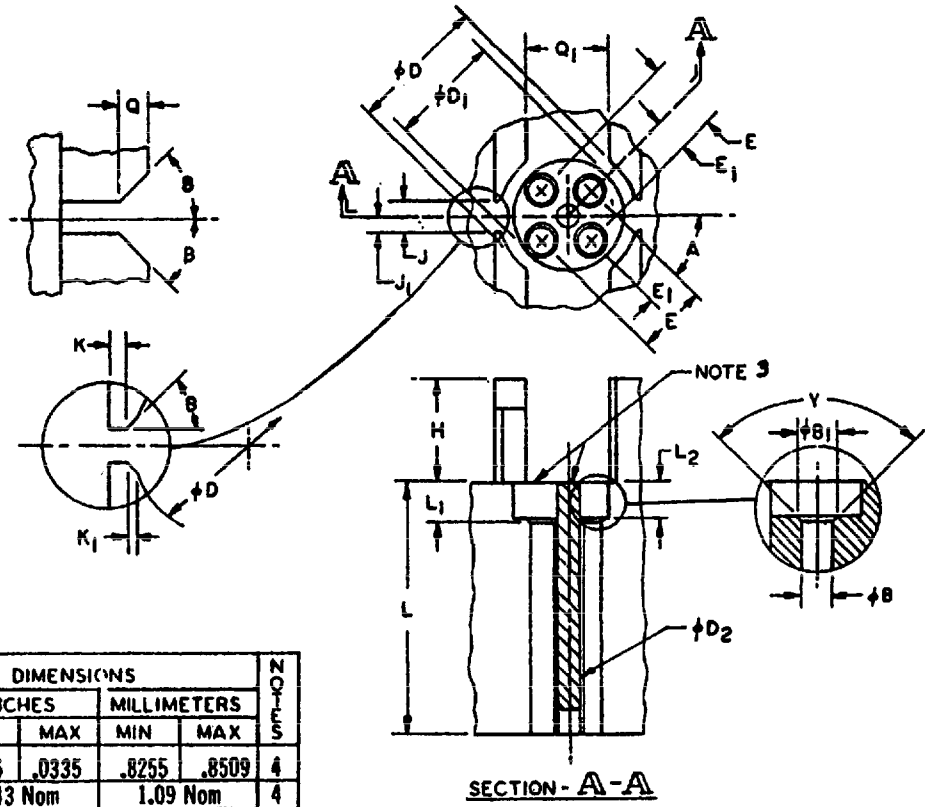

LTR	DIMENSIONS INCHES MIN	INCHES MAX	MILLIMETERS MIN	MILLIMETERS MAX	NOTES
øB	.0325	.0335	.8255	.8509	4
øB1	.043 Nom		1.09 Nom		4
øD	.2310	.2315	5.867	5.880	
øD1	.159	.161	4.04	4.09	
øD2	.040 Nom		1.02 Nom		5
E	.0995	.1005	2.527	2.553	
E1	.0495	.0505	1.257	1.283	
H	.145	.155	3.68	3.94	
J	.0470	.0475	1.194	1.207	
J1	.0235	.0245	.597	.622	
K	.009	.011	.229	.279	
K1	.005 Nom		.127 Nom		
L	.372	.378	9.45	9.60	
L1	.054	.055	1.37	1.40	
L2	.043 Nom		1.09 Nom		
Q	.040 Nom		1.02 Nom		
Q1	.123	.127	3.12	3.23	
A	44.90°	45.10°			
B	45° Nom				
Y	90° Nom				

NOTES:
1. Metric equivalents (to the nearest .01 mm) are given for general information only and are based upon 1 inch = 25.4 mm.
2. The following gaging procedures shall be used: The device being measured shall be inserted until its seating plane is .125±.010 (3.18±.254 mm) from the seating surface of the gage. A force of 8±.5 oz shall then be applied parallel and symmetrical to the device's cylindrical axis. When examined visually after the force application (the force need not be removed) the seating plane of the device shall be seated against the gage. The use of a pin straightener prior to insertion in the gage is permissible. A spacer may be used to obtain the .125 (3.18 mm) distance from the gage seat prior to force application.
3. These surfaces to be parallel and in same plane within ±.001 (.025 mm).
4. Four holes.
5. Pressed in.

* FIGURE 2. Gage for lead and tab location for transistor type 2N706.

TABLE I. Group A inspection

Examination or test	MIL-STD-750 Method	MIL-STD-750 Details	LTPD	Symbol	Limits Min	Limits Max	Unit
Subgroup 1			10				
Visual and mechanical examination	2071			---	---	---	---
Subgroup 2			5				
Breakdown voltage, collector to base	3001	Bias cond. D; I_C = 100 µAdc		BV_{CBO}	25	---	Vdc
Breakdown voltage, collector to emitter	3011	Bias cond. D; I_C = 10 mAdc		BV_{CEO}	15	---	Vdc
Breakdown voltage, emitter to base	3026	Bias cond. D; I_E = 100 µAdc		BV_{EBO}	5.0	---	Vdc
Breakdown voltage, collector to emitter	3011	Bias cond. B; I_C = 50 mAdc; R_{BE} = 10 ohms; t_p = 167 µsec; duty cycle 1%		BV_{CER}	20	---	Vdc
Collector to base cutoff current	3036	Bias cond. D; V_{CB} = 15 Vdc		I_{CBO}	---	0.1	µAdc
Forward-current transfer ratio	3076	V_{CE} = 1.0 Vdc; I_C = 10 mAdc		h_{FE}	30	120	---
Forward-current transfer ratio	3076	V_{CE} = 1.0 Vdc; I_C = 0.1 mAdc		h_{FE}	10	---	---
Forward-current transfer ratio	3076	V_{CE} = 1.0 Vdc; I_C = 1.0 mAdc		h_{FE}	20	---	---
Collector to emitter voltage (saturated)	3071	I_C = 10 mAdc; I_B = 1.0 mAdc		$V_{CE}(sat)$	---	0.5	Vdc
Base-emitter voltage (saturated)	3066	Test cond. A; I_C = 10 mAdc; I_B = 1.0 mAdc		$V_{BE}(sat)$	0.7	0.9	Vdc
Subgroup 3			5				
Magnitude of common-emitter small-signal short-circuit forward-current transfer ratio	3306	V_{CE} = 10 Vdc; I_C = 10 mAdc; f = 100 MHz		$\|h_{fe}\|$	2.0	7.0	---
Open-circuit output capacitance	3236	V_{CB} = 10 Vdc; 100 kHz≤f≤1 MHz		C_{obo}	1.8	6.0	pf
Input capacitance (output open-circuited)	3240	V_{EB} = 0.5 Vdc; I_C = 0; 100 kHz≤f≤1 MHz		C_{ibo}	---	9.0	pf
Subgroup 4			10				
Charge-storage time	---	(see figure 3)		t_s	5.0	35	nsec
Turn-on time	---	(see figure 4)		t_{on}	---	40	nsec
Turn-off time	---	(see figure 4)		t_{off}	---	75	nsec
Subgroup 5			10				
High-temperature operation: Collector to base cutoff current	3036	T_A = +150° C Bias cond. D; V_{CB} = 15 Vdc		I_{CBO}	---	20	µAdc

TABLE I. Group A inspection - Continued

Examination or test	MIL-STD-750		LTPD	Symbol	Limits		Unit
	Method	Details			Min	Max	
Subgroup 5 - Continued							
Low-temperature operation: Forward-current transfer ratio	3076	T_A = -55°C V_{CE} = 10 Vdc; I_C = 10 mAdc		h_{FE}	12	---	---

TABLE II. Group B inspection

Examination or test	MIL-STD-750		LTPD	Symbol	Limits		Unit
	Method	Details			Min	Max	
Subgroup 1			20				
Physical dimensions	2066	(see figure 1)		---	---	---	---
Subgroup 2			10				
Solderability	2026			---	---	---	---
Thermal shock (temperature cycling)	1051	Test cond. C; 10 cycles; exposure time at temp. extremes = 15 minutes (min.)		---	---	---	---
Thermal shock (glass strain)	1056	Test cond. A		---	---	---	---
Moisture resistance	1021			---	---	---	---
End points:							
Collector to base cutoff current	3036	Bias cond. D; V_{CB} = 15 Vdc		I_{CBO}	---	0.1	µAdc
Collector to emitter voltage (saturated)	3071	I_C = 10 mAdc; I_B = 1.0 mAdc		V_{CE}(sat)	---	0.5	Vdc
Base-emitter voltage (saturated)	3066	Test cond. A; I_C = 10 mAdc; I_B = 1.0 mAdc		V_{BE}(sat)	0.7	0.9	Vdc
Subgroup 3			10				
Shock	2016	Nonoperating; 1500 G, 0.5 msec, 5 blows in each orientation: X_1, Y_1, Y_2, and Z_1		---	---	---	---
Vibration, variable frequency	2056	Nonoperating		---	---	---	---
Constant acceleration	2006	20,000 G in each orientation: X_1, Y_1, Y_2, and Z_1		---	---	---	---
End points: (Same as subgroup 2)							
Subgroup 4			20				
Terminal strength (lead fatigue)	2036	Test cond. E		---	---	---	---

TABLE II. Group B inspection - Continued

Examination or test	MIL-STD-750		LTPD	Symbol	Limits		Unit
	Method	Details			Min	Max	
Subgroup 4 - Continued							
End points: Seal (leak-rate)	1071	Test cond. G or H for fine leaks; test cond. A, C, D, or F for gross leaks		---	---	1×10^{-7}	atm cc/sec
Subgroup 5			20				
Salt atmosphere (corrosion)	1041			---	---	---	---
End points: (Same as subgroup 2)							
Subgroup 6			7				
High-temperature life (nonoperating)	1032	T_{stg} = +200° C; time = 340 hours (see 4.3.4)		---	---	---	---
End points: Collector to base cutoff current	3036	Bias cond. D; V_{CB} = 15 Vdc		I_{CBO}	---	0.25	μAdc
Forward-current transfer ratio	3076	V_{CE} = 1.0 Vdc I_C = 10 mAdc		h_{FE}	24	145	---
Subgroup 7			7				
Steady-state operation life	1027	T_A = 25° C V_{CB} = 15 Vdc; P_T = 300 mW; time = 340 hours; (see 4.3.4)		---	---	---	---
End points: (Same as subgroup 6)							

TABLE III. Group C inspection

Examination or test	MIL-STD-750		LTPD	Symbol	Limits		Unit
	Method	Details			Min	Max	
Subgroup 1			10				
Thermal shock (temperature cycling)	1051	Test cond. C; 25 cycles; exposure time at temperature extremes = 15 minutes (min); test to be completed within 72 hours		---	---	---	---
Subgroup 2			15				
Resistance to solvents	---	MIL-STD-202, method 215 (see 4.4.1)		---	---	---	---
Subgroup 3			λ = 10				
High-temperature life (nonoperating)	1031	T_{stg} = +200° C (see 4.3.4)		---	---	---	---
End points: (Same as subgroup 6 of group B)							

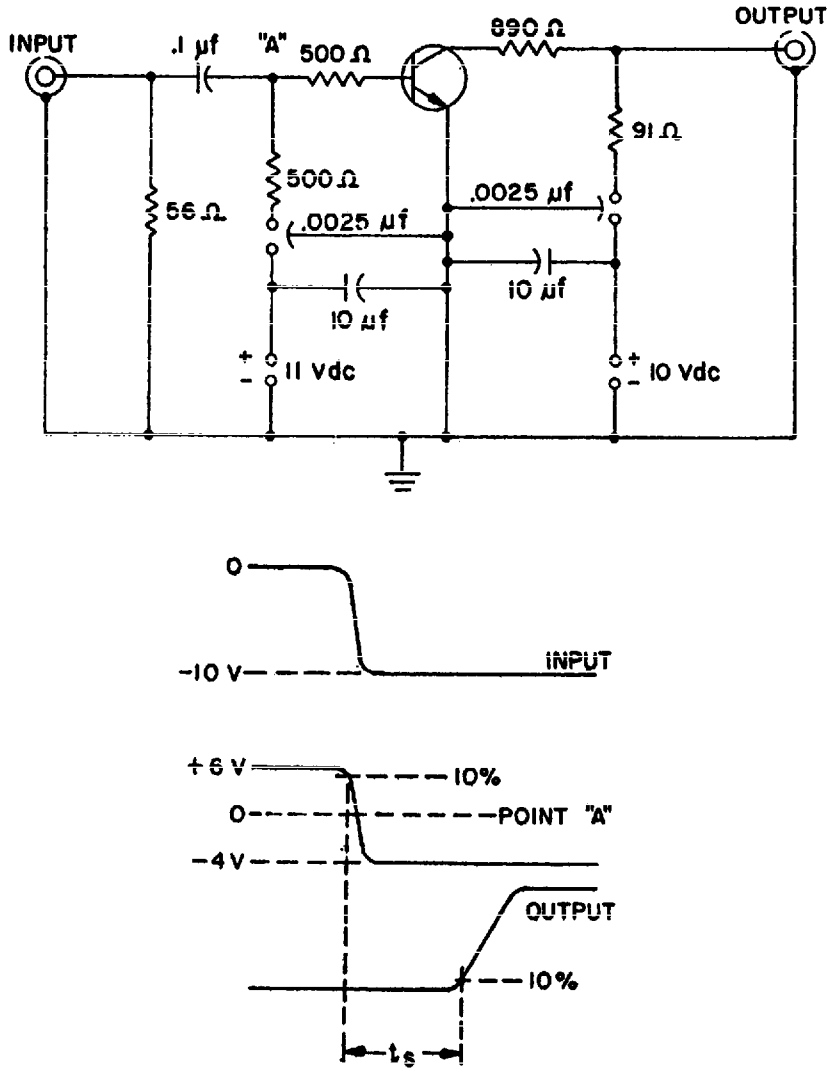

VOLTAGE WAVEFORMS

NOTES:

1. The input waveform is supplied by a pulse generator with the following characteristics:

   Z_{out} = 50 Ω, $t_r \leq$ 1 nsec, PW $\geq$ 300 nsec, duty cycle $\leq$ 2%.

2. Output waveforms are monitored on a sampling oscilloscope with the following characteristics:

   $Z_{in} \geq$ 100 KΩ, $t_r \leq$ 1 nsec.

FIGURE 3. Charge-storage time.

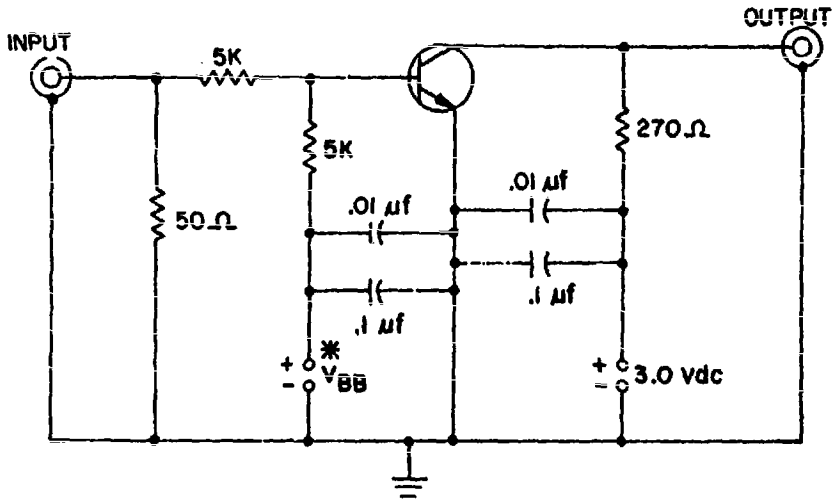

✱ V_{BB} = -4 V_{dc} FOR t ON, +17 V_{dc} FOR t OFF

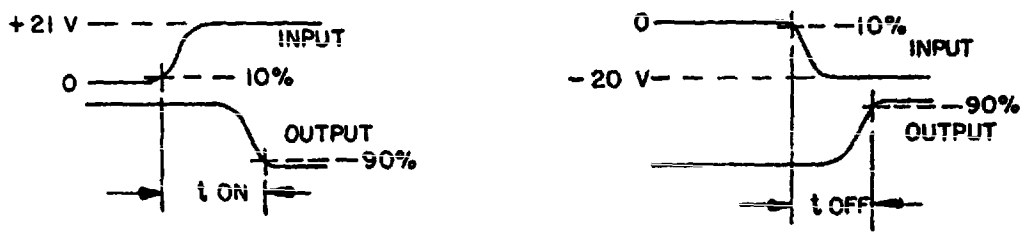

VOLTAGE WAVEFORMS

NOTES:

1. The input waveform is supplied by a pulse generator with the following characteristics:

   Z_{out} = 50 Ω, $t_r \leq$ 1 nsec, PW $\geq$ 300 nsec, duty cycle $\leq$ 2%.

2. Output waveforms are monitored on a sampling oscilloscope with the following characteristics:

   $Z_{in} \geq$ 100 KΩ, $t_r \leq$ 1 nsec.

FIGURE 4. Turn-on and turn-off time test circuit.

TABLE III. Group C inspection - Continued

Examination or test	MIL-STD-750		LTPD	Symbol	Limits		Unit
	Method	Details			Min	Max	
Subgroup 4				$\lambda = 10$			
Steady-state operation life	1026	$T_A = 25°$ C; $V_{CB} = 15$ Vdc; $P_T = 300$ mW (see 4.3.4)		---	---	---	---
End points: (Same as subgroup 6 of group B)							

4.3.4 Group B and group C life-test samples. Samples that have been subjected to group B, 340-hours life-test, may be continued on test to 1,000 hours in order to satisfy group C life-test requirements. These samples shall be predesignated, and shall remain subjected to the group C, 1,000-hour acceptance evaluation after they have passed the group B, 340-hour acceptance criteria. The cumulative total of failures found during 340-hour test and during the subsequent interval up to 1,000 hours shall be computed for 1,000-hour acceptance criteria, see 4.3.3.

4.4 Methods of examination and test. Methods of examination and test shall be as specified in tables I, II, and III, and as follows:

4.4.1 Resistance to solvents. Transistors shall be subjected to tests in accordance with Method 215 of MIL-STD-202. The following details shall apply:

(a) All areas of the transistor body where marking has been applied shall be brushed.
(b) After subjection to the tests, there shall be no evidence of mechanical damage to the device and markings shall have remained legible.

5. PREPARATION FOR DELIVERY

5.1 See MIL-S-19500, section 5.

6. NOTES

6.1 Notes. The notes specified in MIL-S-19500 are applicable to this specification.

6.2 Ordering data. Procurement documents should specify the following:

(a) Lead finish if other than gold-plated (see 3.3.1).
(b) Lead material (see 3.3.1.1).

6.3 Changes from previous issue. Asterisks are not used in this revision to identify changes with respect to the previous issue due to the extensiveness of the changes.

Custodians:
Army - EL
Navy - EC
Air Force - 11

Review activities:
Army - EL, MU, MI
Navy -
Air Force - 11, 17, 85
DSA - ES

User activities:
Army - SM
Navy - MC, AS, OS, SH
Air Force - 19

Preparing activity:
Army - EL

Agent:
DSA - ES

(Project 5961-0152)