MIL-S-19500/123A(EL)
12 December 1966

SUPERSEDING
MIL-S-19500/123(SigC)
1 July 1960

MILITARY SPECIFICATION

SEMICONDUCTOR DEVICE, TRANSISTOR, PNP, GERMANIUM TYPE 2N700A

1. SCOPE

1.1 Scope.- This specification covers the detail requirements for a germanium, PNP, transistor for use as amplifier device(s) in small-signal, VHF, equipment circuits. (See 6.2 herein.)

1.2 Outline and dimensions.- See Figure 1 herein. (TO-72)

1.3 Maximum ratings.- (At T_A = +25°C, unless otherwise specified)

P_T 1/	V_{CBO}	V_{CEO}	V_{EBO}	I_C	T_J	T_{stg}
mW	Vdc	Vdc	Vdc	mAdc	°C	°C
75	25	25	0.3	50	+100	-65to+100

1/ For T_A > +25°C, derate at 1.0 mW/°C.

1.4 Particular electrical characteristics.- (At T_A = +25°C)

	h_{fe} at: f=1kHz V_{CB}=6Vdc I_E = 2mAdc	P.G. at: f=70MHz V_{CB}=6Vdc I_E= 2mAdc	NF at: f=70MHz V_{CB}=6Vdc I_E= 2mAdc	I_{CBO} at: V_{CB}=6Vdc	RE_{hie} at: f=300MHz V_{CB}=6Vdc I_E= 2mAdc	C_{obo} at: f≥100kHz V_{CB}=6Vdc I_E= 2mAdc
	---	db	db	uAdc	ohms	pf
Min	4	22	---	---	---	---
Max	45	---	10	2	100	1.4

FSC-5961

2. APPLICABLE DOCUMENTS

2.1 The following documents, of the issue in effect on date of invitation for bids or request for proposal, form a part of this specification to the extent specified herein:

SPECIFICATIONS

MILITARY

MIL-S-19500	Semiconductor Devices, General Specification For

STANDARDS

MILITARY

MIL-STD-202	Test Methods For Electronic and Electrical Component Parts
MIL-STD-750	Test Methods For Semiconductor Devices

(Copies of specifications, standards, drawings, and publications required by contractors in connection with specific procurement functions should be obtained from the procuring agency or as directed by the contracting officer. Both the title and number or symbol should be stipulated when requesting copies.)

3. REQUIREMENTS

3.1 Requirements.- Requirements for the transistor shall be in accordance with Specification MIL-S-19500 and as otherwise specified herein.

3.2 Abbreviations and symbols.- The abbreviations and symbols used herein are defined in Specification MIL-S-19500, and as follows:

$r_b{}'C_c$	extrinsic base-resistance collector-capacitance product; (collector-base time constant)
$\lvert h_{fe} \rvert$	magnitude of common-emitter small-signal short-circuit transfer ratio

3.3 Design and construction.- The transistor shall be of the design, construction, and physical dimensions specified in Figure 1 herein. (See 3.3.2 and 3.3.3 herein.)

3.3.1 Terminal arrangement.- The terminal arrangement on the transistor shall be as indicated in Figure 1 herein.

3.3.2 Terminal-lead material and finish.- The terminal-lead material and finish shall be gold-plated Kovar. Leads may, additionally, be tin-coated when so specified in contract or order; hereto, where such finished leads are required and provided, it shall not be construed as affecting adversely the Qualified product status of the device, or applicable JAN marking.

3.3.3 Terminal-lead length.- Terminal-lead length(s) other than that specified in Figure 1 may be furnished under contract or order (see 6.3 herein) where the devices covered herein are required directly for particular equipment-curcuit installation. Where such other lead-lengths are required and provided, it shall not be construed as affecting adversely the Qualified-product status of the device, or applicable JAN marking.

3.3.4 Operating position.- The transistor shall be capable of proper operation in any position.

3.4 Performance characteristics.- The transistor performance characteristics shall be as specified in Tables I, II, and III herein.

3.5 Marking.- Except as otherwise specified herein, marking shall be in accordance with Specification MIL-S-19500. If any specification-requirements waiver has been granted, the product-identification marking shall consist of the 'classification' type designation only. (See 4.3.3 herein.)

4. QUALITY ASSURANCE PROVISIONS

4.1 General.- Except as otherwise specified herein, the responsibility for inspection general procedures for acceptance, classification of inspection, and inspection conditions and methods of test shall be in accordance with Specification MIL-S-19500, Quality Assurance Provisions.

4.1.1 Procedure for lots held more than 1 year.- The requirements in Specification MIL-S-19500, paragraph 4.2, applicable to "lots held more than 6 months" shall apply, herewith, only to lots held more than 1 year.

4.2 Qualification and acceptance inspection.- Qualification and Quality Conformance inspection shall be in accordance with Specification MIL-S-19500, Quality Assurance Provisions, and as otherwise specified herein (see 4.2.2 herein). Groups A, B, and C inspection shall consist of the examinations and tests specified in Table I, II and III, respectively, herein. Quality Conformance inspection shall include inspection of Preparation for Delivery (see 5.1 herein).

4.2.1 Specified LTPD for subgroups.- The LTPD specified for a subgroup in Tables I, II, and III herein shall apply for all of the tests, combined, in the subgroup.

4.2.2 Group B-Group C life test samples.- Samples that have been subjected to Group B, 340-hour life test may be continued on test for 1000 hours in order to satisfy Group C life test requirements. These samples shall be predesignated, and shall remain subject to the Group C 1000-hour acceptance evaluation after they have passed the Group B, 340-hour acceptance criteria; hereto the following shall apply:

a. The cumulative total of failures found during 340-hour test and during the subsequent interval up to 1000 hours on these samples shall be computed for 1000-hour acceptance criteria.

b. Where, relative to the different LTPD value established herein for Group C, 1000-hour life test(s), an additional sample quantity is included with the sample quantity per a, above, the total of failures in the overall Group C, 1000-hour acceptance-criteria computation shall be the combination of failures found per a, above, and those failures found per the additional sample quantity subjected to the life (1000-hour) test.

4.2.3 Group C testing.- Unless otherwise specified, Group C tests shall be performed on the initial lot and thereafter on a lot every 6 months. (See Table III herein.) The contractor shall, throughout the course of a contract or order, permit the Government representative to scrutinize all test data and findings covering manufacturer's test program on Group C characteristics and parameters for the product concerned. Upon determination by the Government inspector (in advance of Group C, 6-month, test results) that Group C parameters are not being adequately met, the Government inspector may require lot-by-lot inspection, normally for a minimum of 3 consecutive lots, to be performed for required Group C tests.

4.2.4 Disposition of sample units.- Sample units that have been subjected to Group B, Subgroup 2, 4, and 5 tests shall not be delivered on the contract or order. Sample units that have been subjected to and have passed Group B, Subgroups 1, 3, 6, 7, and 8, and Group C tests (these tests to be considered non-destructive), may be delivered on the contract or order provided that, after Group B and C inspection is terminated, those sample units are subjected to and pass Group A inspection. Defective units from any sample group that may ha passed group inspection shall not be delivered on the contract or order until the defect(s) has been remedied to the satisfaction of the Government.

4.3 Particular examination and test requirements.-

4.3.1 Interval for End-Point test measurements.- All applicable End-Point Test measurements shall be performed, after sample units have been subjected to required physical-mechanical or environmental test(s), in accordance with the following time-delay limitations:

(a) For Qualification inspection: within 24 hours.

(b) For Quality Conformance inspection: within 96 hours.

4.3.2 Mechanical damage resulting from tests.- Except for intentionally deforming, mutilating, or dismembering mechanical-stress tests to which samples are subjected, there shall be no evidence of mechanical damage to any sample unit as a result of any of the Groups A, B, or C tests.

4.3.3 Marking legibility.- Marking shall be legible before and after all tests.

4.3.4 Shock.- The shock testing apparatus shall be capable of providing shock pulses of the specified peak acceleration, waveform, and pulse duration to the body of the device. The acceleration pulse, as determined from the unfiltered output of a transducer with a natural frequency greater than 10,000 cycles per second, shall be a half-sine waveform with an allowable distortion not greater than ±20 percent of the specified peak acceleration. The pulse duration shall be measured between the points at 10 percent of the peak acceleration during rise and at 10 percent of the peak acceleration during decay. Absolute tolerance of the pulse duration shall be ± 30 percent of the specified duration.

Table I. Group A inspection.

Test Method per MIL-STD-750	Examination or test	Conditions	LTPD	Symbol	Limits Min.	Limits Max.	Unit
	Subgroup 1		10				
2071	Visual and mechanical examination	---		---	---	---	---
	Subgroup 2		5				
3001	Collector-base breakdown voltage	Bias Cond. D I_C=100 uAdc		BV_{CBO}	25	---	Vdc
3011	Collector-emitter breakdown voltage	Bias Cond. D I_C=100 uAdc		BV_{CEO}	25	---	Vdc
3026	Emitter-base breakdown voltage	Bias Cond. D I_E=100 uAdc		BV_{EBO}	0.3	1.0	Vdc
3036	Collector-base cutoff current	Bias Cond. D V_{CB} =6 Vdc		I_{CBO}	---	2	uAdc
	Subgroup 3		7				
3206	Small-signal short-circuit forward-current transfer ratio	V_{CB} =6 Vdc I_E =2 mAdc f = 1kHz		h_{fe}	4	45	---
3206	Small-signal short-circuit forward-current transfer ratio	V_{CB} =6 Vdc I_E =5 mAdc f = 1kHz		h_{fe}	---	50	---
3201	Small-signal short-circuit input impedance	V_{CB} =6Vdc I_E = 2mAdc f =1kHz		h_{ib}	---	30	ohms
3236	Output capacitance	V_{CB}= 6Vdc I_E = 0 f ≧ 0.1 ≦ 1MHz Case grounded		C_{obo}	---	1.4	pf

Table I. Group A inspection - (Cont'd).

Test Method per MIL-STD-750	Examination or test	Conditions	LTPD.	Symbol	Limits Min.	Limits Max.	Unit
	Subgroup 4		10				
3306	Magnitude of small-signal short-circuit forward-current transfer ratio	V_{CB}= -6Vdc I_E = 2mAdc f = 100 MHz		$\|h_{fe}\|$	4	8	---
---	Collector-base time constant	V_{CB}= 6Vdc I_E = 2mAdc f = 31.8 MHz Test circuit per Fig.2 herein		$r_b'C_c$	13	27	psec
3246	Noise figure	V_{CB}= 6Vdc : I_E = 2mAdc R_g = 50 ohms f = 70MHz Test circuit per Fig. 3 herein		NF	---	10	db
3256	Small-signal (neutralized) power gain	V_{CB}= 6Vdc I_E = 2mAdc f = 30 MHz Test circuit per Fig. 4 herein		P.G.	26	---	db
3256	Small-signal (neutralized) power gain	V_{CB}= 6Vdc : I_E = 2 mAdc f = 70MHz Test circuit per Fig. 3 herein		P.G.	22	---	db

Table I. Group A inspection - (Cont'd).

Test Method per MIL-STD-750	Examination or test	Conditions	LTPD	Symbol	Limits Min.	Limits Max.	U
	Subgroup 5 1/		15				
2/	High-temperature operation:	$T_A = +85° {}^{+5°}_{-0°}$ C					
3036	Collector-base cutoff current	Bias Cond. D V_{CB} = 6Vdc		I_{CBO}	---	50	uA
2/	Low-temperature operation:	$T_A = -55° {}^{-3°}_{+0°}$ C					
3206	Small-signal short-circuit forward-current transfer ratio	V_{CB} = 6Vdc I_E = 2mAdc f = 1kHz		h_{fe}	2	---	--

1/ For this Subgroup, the sample units subjected to the High-Temperature Operation test shall be permitted to return to and be stabilized at room ambient temperature prior to their being subjected to the Low-Temperature Operation test.

2/ Measurement(s) shall be made after thermal equilibrium has been reached at the temperatu specified.

Table II. Group B inspection.

Test Method per MIL-STD-750	Examination or test 1/	Conditions	LTPD	Symbol	Limits Min.	Limits Max.	Unit
	Subgroup 1		20				
2066	Physical dimensions	---		---	---	---	---
	Subgroup 2		15				
2026	Solderability	Omit aging		---	---	---	---
1051	Temperature cycling	Test Cond. B except $T_{(high)}$= +100°C		---	---	---	---
1056	Thermal shock (glass strain)	Test Cond. A		---	---	---	---
2/	Seal (leak rate)	Test Cond. C, procedure III; Test Cond. A for gross leaks		---	---	10^{-7}	atm cc/sec
1021	Moisture resistance	---		---	---	---	---
	End-Point tests:						
3036	Collector-base cutoff current	Bias Cond. D V_{CB} = 6Vdc		I_{CBO}	---	2	uAdc
3206	Small-signal short-circuit forward-current transfer ratio	V_{CB}= 6Vdc i_E = 2mAdc f =1kHz		h_{fe}	4	45	---

Table II. Group B inspection. - (Cont'd).

Test Method per MIL-STD-750	Examination or test 1/	Conditions	LTPD	Symbol	Limits Min.	Limits Max.	Unit
	Subgroup 3		15				
2016	Shock	3/ Non-operating 1500G 5 blows of 0.5 msec ea. in orientations X1, Y1, Y2, Z1 (total = 20 blows)		---	---	---	---
2046	Vibration fatigue	Non-operating 20 G					
2056	Vibration, variable frequency	---		---	---	---	---
2006	Constant acceleration	20,000G Orientations X1, Y1, Y2, Z1		---	---	---	---
	End-Point tests: Same as for subgroup 2, above						
	Subgroup 4		20				
2036	Terminal strength (lead fatigue)	Test Cond. E		---	---	---	---

Table II. Group B inspection - (Cont'd).

Test Method per MIL-STD-750	Examination or test 1/	Conditions	LTPD	Symbol	Limits Min.	Limits Max.	Unit
	Subgroup 5		20				
1041	Salt atmosphere (corrosion)	---		---	---	---	---
	End-point tests: Same as for Subgroup 2, above						
	Subgroup 6		7				
1031	High-temperature life (non-operating)	T_{stg} = +100°C t = 340 hrs 4/		---	---	---	---
	End-Point tests:						
3036	Collector-base cutoff current	Bias Cond. D V_{CB} = 6Vdc		I_{CBO}	---	4	uAdc
3206	Small-signal short-circuit forward-current transfer ratio	V_{CB} = 6Vdc I_E = 2mAdc f = 1kHz		h_{fe}	3	56	---
	Subgroup 7		7				
1026	Steady state operation life:	T_A = +25°C V_{CB} = 3Vdc I_C = 25 mAdc t = 340 hours 4/		---	---	---	---
	End-point tests: Same as for Subgroup 6 above						

1/ See 4.3.1 herein.

2/ Per Method 112 in Standard MIL-STD-202.

3/ See 4.3.4 herein.

4/ See 4.2.2 herein.

Table III. Group C inspection. 1/

Test Method per MIL-STD-750	Examination or test 2/	Conditions	LTPD	Symbol	Limits Min.	Limits Max.	Unit
	Subgroup 1		15				
3221	Real part of small-signal short-circuit input impedance	V_{CB} = 6Vdc I_E = 2mAdc f = 300 MHz		RE_{hie}	---	100	ohms
	Subgroup 2		15				
3151	Thermal resistance	---		θ_{J-A}	---	1	°C/mW
	Subgroup 3		λ=10				
1031	High-temperature life (non-operating)	T_{stg} = +100°C t = 1000 hrs 3/		---	---	---	---
	End-Point tests:						
3036	Collector-base cutoff current:	Bias Cond. D V_{CB} = 6Vdc		I_{CBO}	---	4	uAdc
3206	Small-signal short-circuit forward-current transfer ratio	V_{CB} = 6Vdc I_E = 2mAdc f = 1kHz		h_{fe}	3	60	---
	Subgroup 4		λ=10				
1026	Steady state operation life:	T_A = +25°C V_{CB} = 3Vdc I_C = 25 mAdc t = 1000 hrs 3/		---	---	---	---
	End-point tests: Same as for Subgroup 3 above						

1/ See 4.2.3 herein. 2/ See 4.3.1 herein. 3/ See 4.2.2 herein.

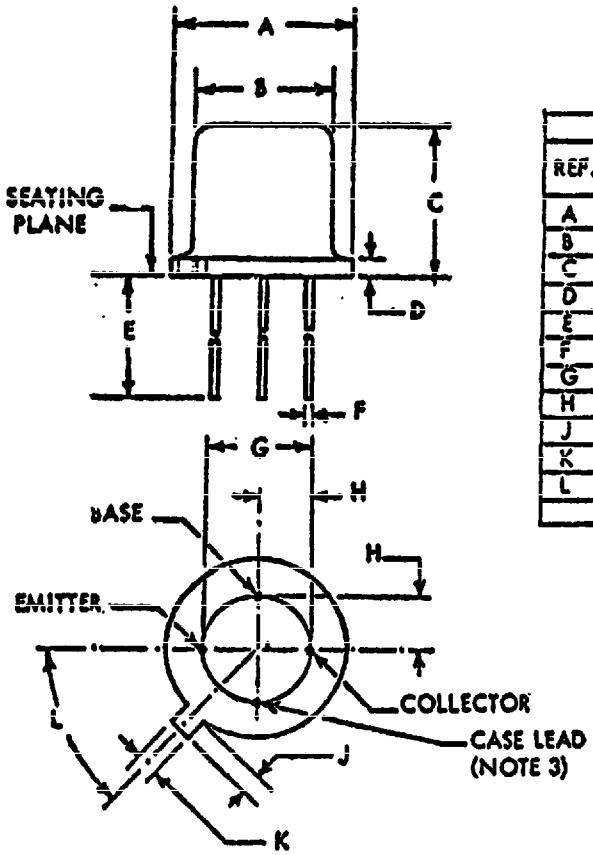

REF.	DIMENSIONS INCHES MIN.	INCHES MAX.	MILLIMETERS MIN.	MILLIMETERS MAX.	NOTES
A	.209	.230	5.31	5.84	
B	.178	.195	4.52	4.95	
C	.170	.210	4.32	5.33	
D		.030		0.76	
E	.500	.570	12.70	14.47	
F	.016	.019	0.41	0.48	1
G	.100		2.54		
H	.050		1.27		2
J	.028	.048	0.71	1.22	
K	.036	.046	0.91	1.17	
L	45°		45°		2

NOTES:

1. The specified lead diameter (4 leads) applies to the zone between .050 and .250 below seating plane. Between .250 from seating plane, and end of lead, a maximum of .021 shall be held.
2. As measured with a suitable gage at a gaging plane $.054 \begin{smallmatrix}+.001\\-.000\end{smallmatrix}$ below seating plane, the lead orientation shall be within .007 of specified locations relative to true orientation of tab (centerline). When gage is not used, measurement shall be made at seating plane.
3. Emitter, Base, and Collector leads electrically insulated from the case. The "Case" lead is electrically connected to the case.

Figure 1. Outline and dimensions.

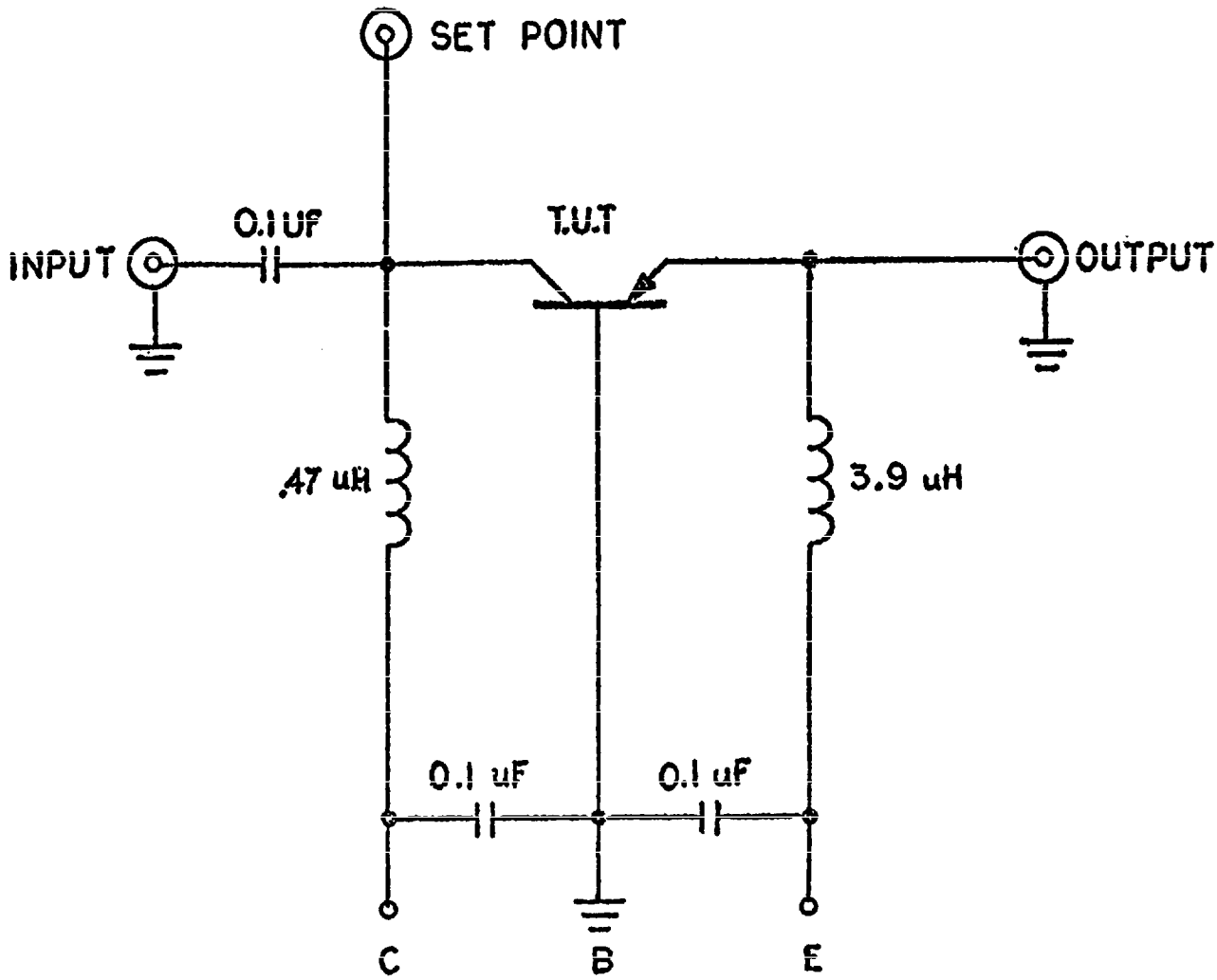

NOTE:
1. E = 0.5V measured at "set point."

Figure 2. $r_b'C_c$ test circuit.

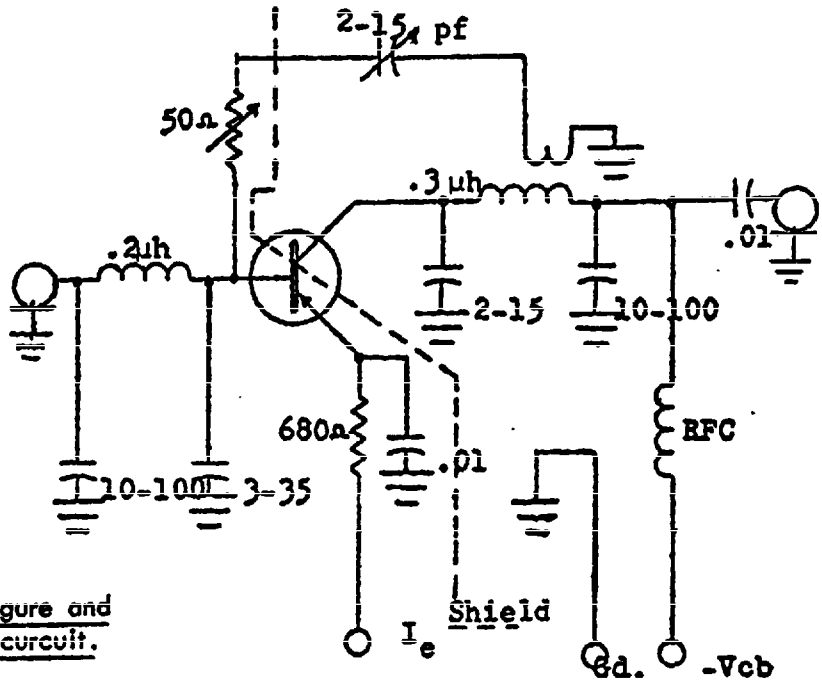

Fig. 3. 70-MHz Noise Figure and Power Gain test curcuit.

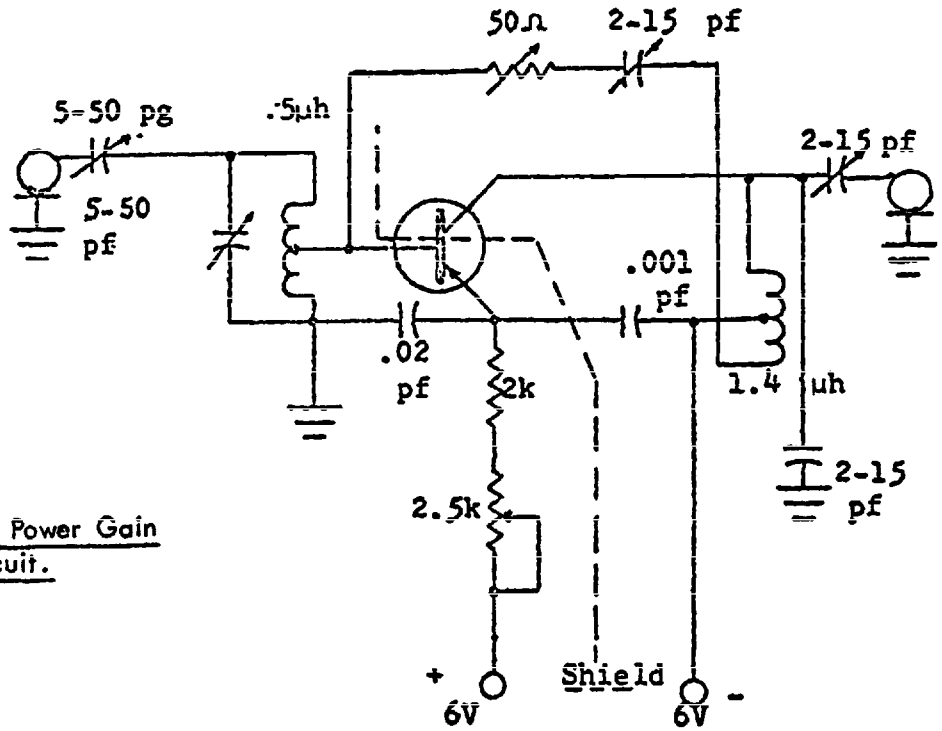

Fig.4. 30-MHz Power Gain test circuit.

5. PREPARATION FOR DELIVERY

5.1 Preparation for delivery.- Preparation for delivery shall be in accordance with Specification MIL-S-19500.

6. NOTES

6.1 Notes.- The notes included in Specification MIL-S-19500, with the following additions or exceptions, are applicable to this specification.

6.2 Application guidance.- The transistors conforming to requirements in this document issue are recommended as ready replacements (having superior-controlled operational characteristics) for the transistors covered by previous issue(s) of this document.

6.3 Ordering data.-

a. Terminal-lead finish.- See 3.3.2 herein.

b. Terminal-lead length.- See 3.3.3 herin.

6.4 Qualification.- With respect to products requiring qualification, awards will be made only for such products as have, prior to the time set for opening of bids, been tested and approved for inclusion in Qualified Products List (QPL)-19500, whether or not such products have actually been so listed by that date. Information pertaining to qualification of products covered by this specification should be requested from the Commanding General, U. S. Army Electronics Command, Fort Monmouth, New Jersey 07703, Attention: AMSEL-PP-EM-2.

6.5 Changes from previous issue.- Asterisks are not used in this revision to identify changes with respect to the previous issue, due to the extensiveness of the changes.

Custodian:
Army-EL

Preparing activity:
Army-EL

Project No. 5961-A085