MIL-S-19500/16E
24 November 1964
SUPERSEDING
MIL-S-19500/16D
27 December 1961

MILITARY SPECIFICATION

TRANSISTOR, NPN, SILICON

TYPES 2N342, 2N342A, AND 2N343

This specification is mandatory for use by all Departments and Agencies of the Department of Defense.

1. SCOPE

1.1 Scope. This specification covers the detail requirements for medium-power, audio-range, silicon, NPN transistors and is in accordance with Specification MIL-S-19500 except as otherwise specified herein.

1.2 Physical dimensions. See figure 1 (TO-11)

1.3 Absolute-maximum ratings:

P_C (watts)	V_{CB} and V_{CE} (Vdc)		I_C	V_{EB}	T_{stg}	T_J
$T_C = 25°C$ 1/	2N342 2N343	2N342A	(mAdc)	(Vdc)	(°C)	(°C)
1.0	60	85	60	1.0	-65 to +150	150

1/ Derate linearly 8 mW/°C for $T_C > 25°C$.

1.4 Primary electrical characteristics.

	h_{fb}		h_{ib}	h_{ob}	h_{rb}	V_{CE}(sat) (Vdc) I_C = 20 mAdc I_B = 3.0 mAdc
	2N342 2N342A	2N343	(ohms)	(umho)	$x10^{-6}$	
Min.	0.900	0.966	---	---	---	---
Max.	0.970	0.989	30	2.0	300	7.0

2. APPLICABLE DOCUMENTS

2.1 The following documents, of the issue in effect on date of invitation for bids or request for proposal, form a part of this specification to the extent specified herein.

SPECIFICATION

Military

MIL-S-19500 - Semiconductor Devices, General Specification for.

STANDARD

Military

MIL-STD-750 - Test Methods for Semiconductor Devices

(Copies of specifications, standards, drawings, and publications required by suppliers in connection with specific procurement functions should be obtained from the procuring activity or as directed by the contracting officer.)

FSC 5960

3. REQUIREMENTS

3.1 General. Requirements shall be in accordance with Specification MIL-S-19500, and as specified herein.

3.2 Abbreviations, symbols, and definitions. The abbreviations, symbols and definitions used here are defined in Specification MIL-S-19500.

3.3 Design and construction. Transistors shall be of the design, construction, and physical dimensions shown on figure 1.

3.4 Performance characteristics. Performance characteristics shall be as specified in tables I, II, and as follows:

3.4.1 Salt atmosphere (corrosion). The transistor shall be examined for evidence of corrosion and legibility of marking before the specified measurements are made (see 4.4.1).

3.5 Marking. The following marking specified in MIL-S-19500 may be omitted from the body of the transistor:

(a) Country of origin.

(b) Manufacturer's identification.

4. QUALITY ASSURANCE PROVISIONS

4.1 Sampling and inspection. Sampling and inspection shall be in accordance with MIL-S-19500, and as specified herein.

4.2 Qualification inspection. Qualification inspection shall consist of the examinations and tests specified in tables I and II.

4.3 Quality conformance inspection. Quality conformance inspection shall consist of group A and B inspections.

4.3.1 Group A inspection. Group A inspection shall consist of the examinations and tests specified in table I.

4.3.2 Group B inspection. Group B inspection shall consist of the examinations and tests specified in table II.

4.4 Methods of examination and test. Methods and examination and test shall be as specified in tables I, II, and as follows:

4.4.1 Salt atmosphere. The marking shall be legible after the test. There shall be no evidence (when examined with no magnification) of flaking or pitting of the finish or corrosion that will interfere with the mechanical or electrical application of the device.

4.4.2 Test measurements shall be made after thermal equilibrium has been reached at the temperature specified.

4.4.3 Inspection conditions. All measurements and tests to be made at $T_A = 25°C$ unless otherwise specified.

4.4.4 Small signal power gain. The transistor shall be operated in the circuit shown, and under the conditions specified, on Figure 3. The power gain shall then be computed as follows:

$$G_{pe} = 10 \log_{10} \left[10(V_o)^2 \right]$$

Table I. Group A inspection.

Examination or test	MIL-STD-750 Method	MIL-STD-750 Details	LTPD	Symbol	Limits Min	Limits Max	Limits Unit
Subgroup 1			10				
Visual and mechanical examination	2071						
Subgroup 2			5				
Breakdown voltage, collector to base	3001	Bias cond. D; I_C = 50 uAdc					
2N342, 2N343				BV_{CBO}	60	---	Vdc
2N342A				BV_{CBO}	85	---	Vdc
Breakdown voltage, collector to emitter	3011	Bias cond. D; I_C = 100 uAdc					
2N342, 2N343				BV_{CEO}	60	---	Vdc
2N342A				BV_{CEO}	85	---	Vdc
Collector to base cutoff current	3036	Bias cond. D; V_{CB} = 30 Vdc		I_{CBO}	---	1.0	uAdc
Emitter to base cutoff current	3061	Bias cond. D; V_{EB} = 1 Vdc		I_{EBO}	---	100	uAdc
Collector to emitter voltage, (saturated)	3071	I_C = 20 mAdc I_B = 3.0 mAdc		V_{CE}(sat)	---	7.0	Vdc
Base to emitter voltage, (saturated)	3066	Test cond. A; I_C = 20 mAdc I_B = 3.0 mAdc		V_{BE}(sat)	---	1.0	Vdc
Small-signal short-circuit input impedance	3201	V_{CB} = 10 Vdc; I_E = -5 mAdc		h_{ib}	---	30	ohms
Small-signal short-circuit forward-current transfer ratio	3206	V_{CB} = 10 Vdc; I_E = -5 mAdc					
2N342, 2N342A				h_{fb}	0.900	0.970	---
2N343				h_{fb}	0.966	0.989	---
Small-signal open-circuit reverse-voltage transfer ratio	3211	V_{CB} = 10 Vdc; I_E = -5 mAdc		h_{rb}	---	300	$x10^{-6}$
Small-signal open-circuit output admittance	3216	V_{CB} = 10 Vdc; I_E = -5 mAdc		h_{ob}	---	2.0	umho
Subgroup 3			10				
High-temperature operation: Collector to base cutoff current	3036	T_A = +150°C Bias cond. D; V_{CB} = 30 Vdc;		I_{CBO}	---	250	uAdc
Small-signal power gain	3256	See figure 3; T_A = 25°C V_{CE} = 28 Vdc; I_C = 20 mAdc		G_{pe}	30	---	db
Small-signal short-circuit forward-current transfer-ratio cutoff frequency	3301	V_{CB} = 20 Vdc; I_E = -1.0 mAdc T_A = 25°C		f_{hfb}	1.0	---	mc

Table II. Group B inspection.

Examination or test	MIL-STD-750		LTPD	Symbol	Limits		
	Method	Details			Min	Max	Unit
Subgroup 1			20				
Physical dimensions	2066				(See figure 1)		
Subgroup 2			10				
Solderability	2026			---	---	---	---
Temperature cycling	1051	Test cond. F; 10 cycles		---	---	---	---
Moisture resistance	1021			---	---	---	---
End points:							
Collector to base cutoff current	3036	Bias cond. D; V_{CB} = 30 Vdc		I_{CBO}	---	2.0	uAdc
Small-signal open-circuit output admittance	3216	V_{CB} = 10 Vdc; I_E = -5 mAdc		h_{ob}	---	2.7	umho
Small-signal short-circuit forward-current transfer ratio	3206	V_{CB} = 10 Vdc; I_E = -5 mAdc					
2N342, 2N342A				h_{fb}	0.88	---	---
2N343				h_{fb}	0.95	---	---
Subgroup 3			10				
Shock	2016	Nonoperating; 500 G for approx. 1 msec.; 5 blows in each orientation X_1, Y_1, Y_2, and Z_1		---	---	---	---
Vibration fatigue	2046	10 G		---	---	---	---
Constant acceleration	2006	20,000 G in each orientation X_1, Y_1, Y_2, and Z_1		---	---	---	---
End points:							
(Same as subgroup 2)							
Subgroup 4 1/			10				
Terminal strength (lead fatigue)	2036	Test cond. E		---	---	---	---
Subgroup 5			10				
Salt atmosphere (corrosion)	1041			---	---	---	---
End points:							
(Same as subgroup 2)							
Subgroup 6			λ = 10				
High temperature life (non-operating)	1031	T_{stg} = +150°C		---	---	---	---
End points:							
(Same as subgroup 2)							

1/ Electrical rejects from the same lot may be used for this test.

Table II. Group B inspection. - Continued

Examination or test	MIL-STD-750		LTPD	Symbol	Limits		
	Method	Details			Min	Max	Unit
Subgroup 7			$\lambda = 10$				
Steady state operation life	1026	$T_C = +25 \pm 3°C$; $V_{CB} = 20$ Vdc $I_E = -50$ mAdc		---	---	---	---
End points:							
(Same as subgroup 2)							

5. PREPARATION FOR DELIVERY

5.1 Preparation for delivery and the quality assurance provisions for preparation for delivery shall conform to Specification MIL-S-19500.

6. NOTES

6.1 Notes. The notes specified in Specification MIL-S-19500 are applicable to this specification.

Custodians:
Army - EL
Navy - SH
Air Force - 11

Review activities:
Army - EL, MU
Navy - SH
Air Force - 11, 17, 85

User activities:
Army - MI, SM
Navy - CG, MC, WP
Air Force - None

Preparing activity:

Navy -SH

(Project 5960-1921)

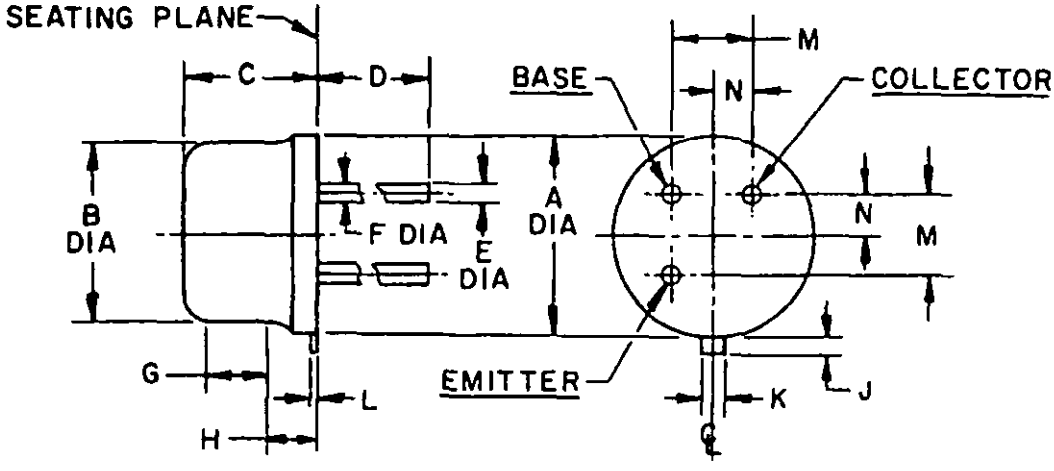

LTR	DIMENSIONS				NOTES
	INCHES		MILLIMETERS		
	MIN	MAX	MIN	MAX	
A	---	.370	---	9.40	
B	.305	.335	7.75	8.51	
C	.360	.390	9.14	9.91	
D	1.500	---	38.10	---	9
E	.016	.021	.41	.53	2,9
F	.016	.019	.41	.48	3,9
G	.200	---	5.08	---	4
H	---	---	---	---	5
J	.029	---	.74	---	8
K	.028	.034	.71	.86	
L	.009	.125	.23	3.18	
M	.1414 Nom		3.59 Nom		6
N	.0707 Nom		1.80 Nom		6

NOTES: (Millimeters are in parentheses)
1. Metric equivalents are shown for general information only and are based upon 1 inch = 25.4 mm.
2. Measured in the zone beyond .250(6.35) from the seating plane.
3. Measured in the zone .050(1.27) and .250(6.35) from the seating plane.
4. Variations on dim B in this zone shall not exceed .010(.25).
5. Outline in this zone is not controlled.
6. When measured in a gaging plane $.054^{+.001}_{-.000}$ $(1.37^{+.03}_{-.00})$ below the seating plane of the transistor max dia leads shall be within .007(.18) of their true location. Smaller dia leads shall fall within the outline of the max dia lead tolerance. Fig 2 preferred measured method.
7. All leads shall be electrically isolated from case.
8. Measured from the maximum diameter of the actual device.
9. All three leads.

Figure 1. Physical dimensions of transistor types 2N342, 2N342A, and 2N343.

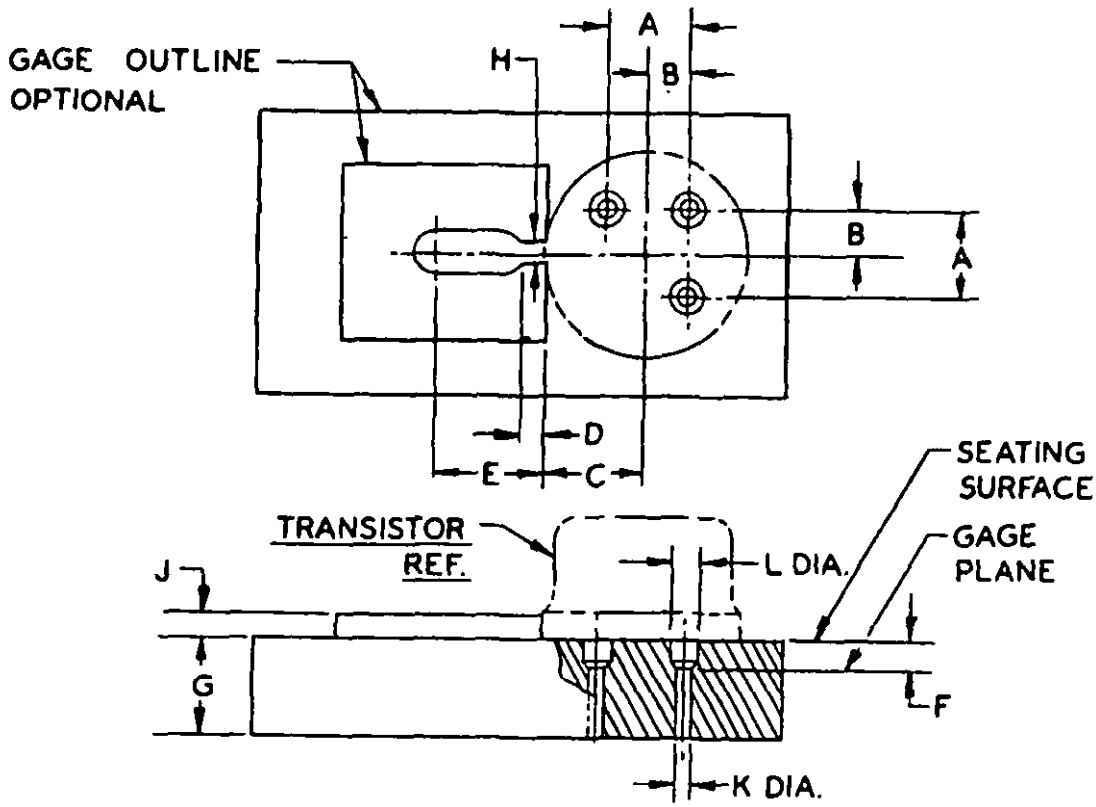

LTR	DIMENSIONS				NOTES
	INCHES		MILLIMETERS		
	MIN	MAX	MIN	MAX	
A	.1409	.1419	3.58	3.60	
B	.0702	.0712	1.78	1.81	
C	.182	.199	4.62	5.05	2
D	.009	.011	.23	.28	
E	.125 Nom		3.18 Nom		
F	.054	.055	1.37	1.40	
G	.372	.378	9.45	9.60	
H	.0350	.0355	.89	.90	
J	.150 Nom		3.81 Nom		
K	.0325	.0335	.83	.85	
L	.0595	.0605	1.51	1.54	

NOTES: (Millimeters are in parentheses)
1. The following gaging procedure shall be used: The use of a pin straightener prior to insertion in the gage is permissible. The device being measured shall be inserted until its seating plane is .125±.010(3.18±.25) from the seating surface of the gage. A spacer may be used to obtain the .125(3.18) distance from the gage seat prior to force application. A force of 8 oz±.5 oz shall then be applied parallel and symmetrical to the device's cylindrical axis. When examined visually after the force application (the force need not be removed) the seating plane of the device shall be seated against the gage.
2. The location of the tab locator, within the limits of dimension C, will be determined by the tab and flange dimension of the device being checked.
3. Metric equivalents are shown for general information only and are based upon 1 inch = 25.4 mm.

Figure 2. Gage for lead and tab location for transistor types 2N342, 2N342A, and 2N343.

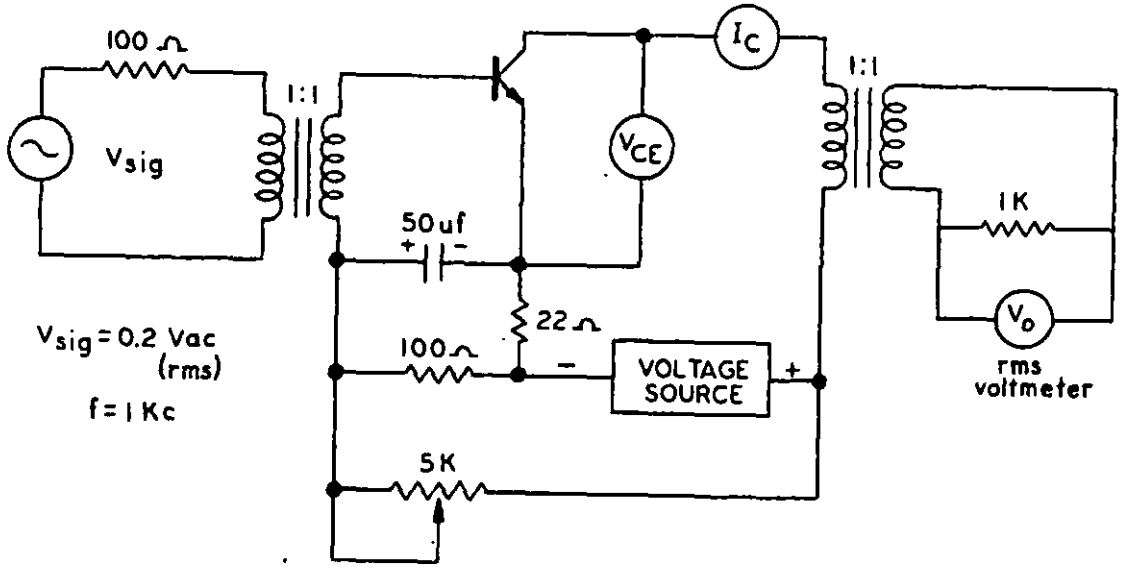

Figure 3. Small signal power gain test circuit.