MIL-S-19500/175C
10 October 1968
SUPERSEDING
MIL-S-19500/175B
2 July 1964
(See 6.3)

MILITARY SPECIFICATION

SEMICONDUCTOR DEVICE, TRANSISTOR, PNP, GERMANIUM, LOW-POWER

TYPES 2N650A, 2N651A, AND 2N652A

This specification is mandatory for use by all Departments and Agencies of the Department of Defense.

1. SCOPE

1.1 Scope. This specification covers the detail requirements for PNP, germanium, low-power transistors.

* 1.2 Physical dimensions. See figure 1 (TO-5).

1.3 Maximum ratings.

P_T 1/ T_A = 25° C	V_{CB}	V_{CE}	V_{EB}	I_C	T_{stg}
mW	Vdc	Vdc	Vdc	mAdc	°C
200	-45	-30	-30	500	-65 to +100

1/ Derate linearly 2.67 mW/° C for $T_A > 25°$ C.

* 1.4 Primary electrical characteristics.

Limits	Types	h_{fe} V_{CE} = -6 Vdc I_E = 1.0 mAdc	h_{ib} V_{CB} = -6 Vdc I_E = 1.0 mAdc	h_{ob} V_{CB} = -6 Vdc I_E = 1.0 mAdc	f_{hfb}	C_{obo} V_{CB} = -6 Vdc I_E = 0 100 kHz ≤ f ≤ 1 MHz
			ohms	µmho	MHz	pf
Min	2N650A	30	27	.15	0.75	---
	2N651A	50	27	.15	1.00	---
	2N652A	100	27	.15	1.25	---
Max	2N650A	70	37	.70	---	25
	2N651A	120	37	.70	---	25
	2N652A	225	37	.70	---	25

2. APPLICABLE DOCUMENTS

2.1 The following documents, of the issue in effect on date of invitation for bids or request for proposal, form a part of the specification to the extent specified herein.

SPECIFICATION

MILITARY

MIL-S-19500 - Semiconductor Devices, General Specification for

STANDARDS

MILITARY

MIL-STD-202 - Test Methods for Electronic and Electrical Component Parts.
MIL-STD-750 - Test Methods for Semiconductor Devices.

(Copies of specifications, standards, drawings, and publications required by suppliers in connection with specific procurement functions should be obtained from the procuring activity or as directed by the contracting officer.)

3. REQUIREMENTS

3.1 General. Requirements shall be in accordance with MIL-S-19500, and as specified herein.

3.2 Abbreviations, symbols, and definitions. The abbreviations, symbols, and definitions used herein are defined in MIL-S-19500.

3.3 Design, construction, and physical dimensions. Transistors shall be of the design, construction, and physical dimensions shown on figure 1.

3.4 Performance characteristics. Performance characteristics shall be as specified in tables I, II, and III.

3.5 Marking. The following marking specified in MIL-S-19500 may be omitted from the body of the transistor at the option of the manufacturer:

(a) Country of origin.
(b) Manufacturer's identification.

4. QUALITY ASSURANCE PROVISIONS

4.1 Sampling and inspection. Sampling and inspection shall be in accordance with MIL-S-19500, and as specified herein.

4.2 Qualification inspection. Qualification inspection shall consist of the examinations and tests specified in tables I, II, and III.

4.3 Quality conformance inspection. Quality conformance inspection shall consist of group A, B, and C inspections. When specified in the contract or order, one copy of the quality conformance inspection data, pertinent to the device inspection lot, shall be supplied with each shipment by the device manufacturer (see 6.2).

4.3.1 Group A inspection. Group A inspection shall consist of the examinations and tests specified in table I.

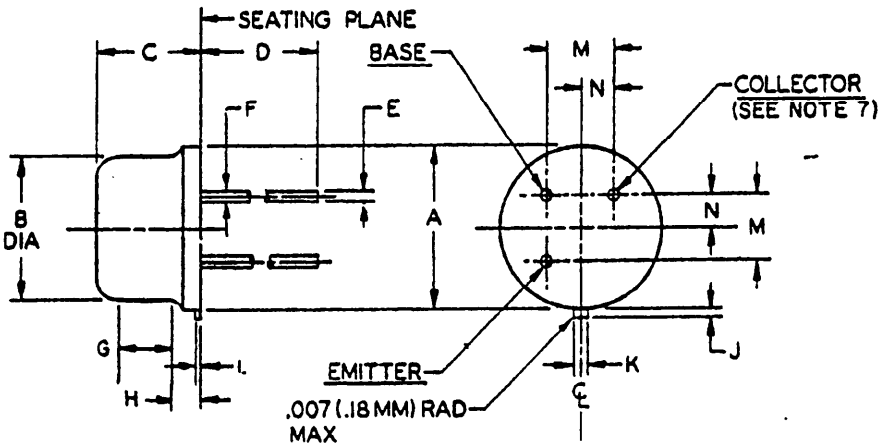

LTR	DIMENSIONS				NOTES
	INCHES		MILLIMETERS		
	MIN	MAX	MIN	MAX	
A	.335	.370	8.51	9.40	
B	.305	.335	7.75	8.51	
C	.240	.260	6.10	6.60	
D	1.500	1.750	38.10	44.45	9
E	.016	.021	.41	.53	2,9
F	.016	.019	.41	.48	3,9
G	.100	---	2.54	---	4
H	---	---	---	---	5
J	.029	.045	.74	1.14	8
K	.028	.034	.71	.86	
L	.009	.125	.23	3.18	
M	.1414 Nom		3.59 Nom		6
N	.0707 Nom		1.80 Nom		6

NOTES:
1. Metric equivalents (to the nearest .01 mm) are given for general information only and are based upon 1 inch = 25.4 mm.
2. Measured in the zone beyond .250 (6.35 mm) from the seating plane.
3. Measured in the zone .050 (1.27 mm) and .250 (6.35 mm) from the seating plane.
4. Variations on dimension B in this zone shall not exceed .010 (.25 mm).
5. Outline in this zone is not controlled.
6. When measured in a gaging plane .054+.001, -.000 (1.37+.03, -.00 mm) below the seating plane of the transistor, maximum diameter leads shall be within .007 (.18 mm) of their true location relative to a maximum width tab. Smaller diameter leads shall fall within the outline of the maximum diameter lead tolerance. Figure 2 shows the preferred measured method.
7. All leads electrically isolated from case.
8. Measured from the maximum diameter of the actual device.
9. All 3 leads.

* FIGURE 1. Physical dimensions of transistor types 2N650A, 2N651A and 2N652A (TO-5).

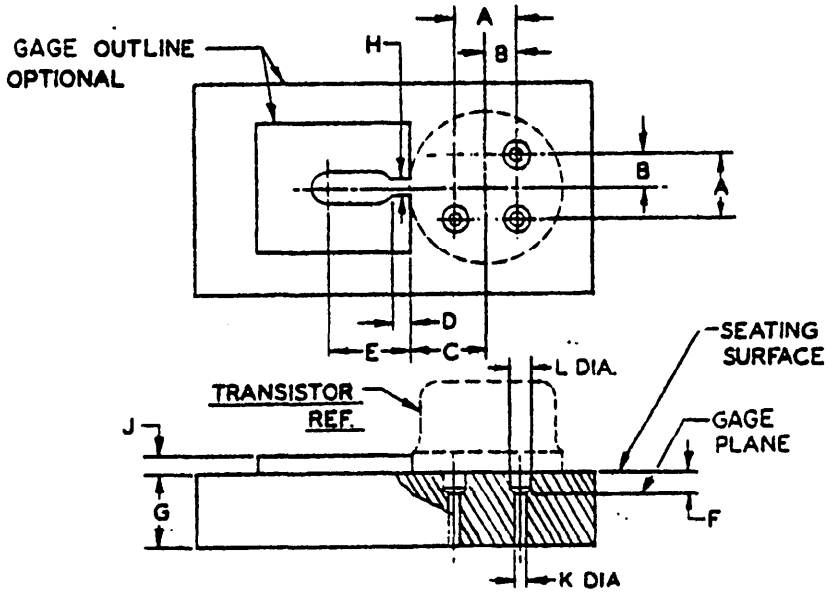

NOTES:

1. The following gaging procedure shall be used: The use of a pin straightener prior to insertion in the gage is permissible. The device being measured shall be inserted until its seating plane is .125±.010 (3.18±.25 mm) from the seating surface of the gage. A spacer may be used to obtain the .125 (3.18 mm) distance from the gage seat prior to force application. A force of 8 oz ±.5 oz shall then be applied parallel and symmetrical to the device's cylindrical axis. When examined visually after the force application (the force need not be removed) the seating plane of the device shall be seated against the gage.
2. The location of the tab locator, within the limits of dimension C, will be determined by the tab and flange dimension of the device being checked.
3. Metric equivalents (to the nearest .01 mm) are given for general information only and are based upon 1 inch = 25.4 mm.

DIMENSIONS				
LTR	INCHES		MILLIMETERS	
	MIN	MAX	MIN	MAX
A	.1409	.1419	3.58	3.60
B	.0702	.0712	1.78	1.81
C	.182	.199	4.62	5.05
D	.009	.011	.23	.28
E	.125 Nom		3.18 Nom	
F	.054	.055	1.37	1.40
G	.372	.378	9.45	9.60
H	.0350	.0355	.89	.90
J	.150 Nom		3.81 Nom	
K	.0325	.0335	.83	.85
L	.0595	.0605	1.51	1.54

FIGURE 2. Gage for lead and tab location for transistor types 2N650A, 2N651A and 2N652A.

4.3.2 Group B inspection. Group B inspection shall consist of the examinations and tests specified in table II.

4.3.3 Group C inspection. Group C inspection shall consist of the examinations and tests specified in table III. This inspection shall be conducted on the initial lot and thereafter every 6 months during production.

4.4 Methods of examination and tests. Methods of examination and test shall be as specified in tables I, II, and III.

TABLE I. Group A inspection

Examination or test	MIL-STD-750		LTPD	Symbol	Limits		Unit
	Method	Details			Min	Max	
Subgroup 1			10				
Visual and mechanical examination	2071			---	---	---	---
* Subgroup 2			5				
Collector to base cutoff current	3036	Bias cond. D; V_{CB} = -30 Vdc		I_{CBO}	---	-10	μAdc
Collector to base cutoff current	3036	Bias cond. D; V_{CB} = -45 Vdc		I_{CBO}	---	-50	μAdc
Floating potential	3020	V_{CB} = -46 Vdc; voltmeter input resistance ≥ 10 megohms		V_{EBF}	---	-1	Vdc
Collector to emitter cutoff current	3041	Bias cond. B; V_{CE} = -30 Vdc; R_{BE} = 10 Kohms		I_{CER}	---	-600	μAdc
Emitter to base cutoff current	3061	Bias cond. D; V_{EB} = -30 Vdc		I_{EBO}	---	-10	μAdc
Collector to emitter voltage (saturated)	3071			V_{CE}(sat)			
2N650A		I_C = -50 mAdc; I_B = -2.5 mAdc			---	-.250	Vdc
2N651A		I_C = -50 mAdc; I_B = -1.67 mAdc			---	-.250	Vdc
2N652A		I_C = -50 mAdc; I_B = -1.25 mAdc			---	-.250	Vdc

TABLE I. Group A inspection - Continued

Examination or test	MIL-STD-750		LTPD	Symbol	Limits		Unit
	Method	Details			Min	Max	
Subgroup 2 - Continued							
Collector to emitter voltage (saturated)	3071			$V_{CE}(sat)$			
2N650A		I_C = -100 mAdc; I_B = -5 mAdc			---	-.500	Vdc
2N651A		I_C = -100 mAdc; I_B = -3.33 mAdc			---	-.500	Vdc
2N652A		I_C = -100 mAdc; I_B = -2.5 mAdc			---	-.500	Vdc
Base emitter voltage (nonsaturated)	3066	Test cond. B; I_C = -10 mAdc; V_{CE} = -1 Vdc		V_{BE}			
2N650A					---	-.270	Vdc
2N651A					---	-.260	Vdc
2N652A					---	-.250	Vdc
* Subgroup 3			5				
Forward-current transfer ratio	3076	V_{CE} = -1 Vdc; I_C = -10 mAdc		h_{FE}			
2N650A					33	90	---
2N651A					45	150	---
2N652A					80	250	---
Forward-current transfer ratio	3076	V_{CE} = -0.5 Vdc; I_C = -100 mAdc		h_{FE}			
2N650A					20	---	---
2N651A					30	---	---
2N652A					40	---	---
Small-signal short-circuit forward-current transfer ratio	3206	V_{CE} = -6 Vdc; I_E = 1.0 mAdc		h_{fe}			
2N650A					30	70	---
2N651A					50	120	---
2N652A					100	225	---
Small-signal short-circuit input impedance	3201	V_{CB} = -6 Vdc; I_E = 1.0 mAdc		h_{ib}			
2N650A					27	37	ohms
2N651A					27	37	ohms
2N652A					27	37	ohms
Small-signal open-circuit output admittance	3216	V_{CB} = -6 Vdc; I_E = 1.0 mAdc		h_{ob}			
2N650A					.15	.70	µmho
2N651A					.15	.70	µmho
2N652A					.15	.70	µmho

TABLE I. Group A inspection -Continued

Examination or test	MIL-STD-750		LTPD	Symbol	Limits		Unit
	Method	Details			Min	Max	
Subgroup 3 - Continued							
Small-signal open-circuit reverse-voltage transfer ratio	3211	V_{CB} = -6 Vdc; I_E = 1.0 mAdc		h_{rb}			
2N650A					1	8	$x10^{-4}$
2N651A					1	10	$x10^{-4}$
2N652A					1	12	$x10^{-4}$
Small-signal short-circuit forward-current transfer-ratio cutoff frequency	3301	V_{CB} = -6 Vdc; I_E = 1.0 mAdc		f_{hfb}			
2N650A					0.75	---	MHz
2N651A					1.00	---	MHz
2N652A					1.25	---	MHz
Open circuit output capacitance	3236	V_{CB} = -6 Vdc; I_E = 0; 100 kHz $\leq f \leq$ 1 MHz		C_{obo}	---	25	pf
Noise figure	3246	V_{CB} = -4.5 Vdc; I_E = 0.5 mAdc; R_g = 1 Kohms		NF	---	15	db
* Subgroup 4			10				
High temperature operation: Collector to base cutoff current	3036	T_A = +71°C Bias cond. D; V_{CB} = -10 Vdc		I_{CBO}	---	-100	µAdc
Low temperature operation: Small-signal short-circuit forward-current transfer ratio	3206	T_A = -55°C V_{CE} = -6 Vdc; I_E = 1.0 mAdc		h_{fe}			
2N650A					15	---	---
2N651A					25	---	---
2N652A					50	---	---

TABLE II. Group B inspection

Examination or test	MIL-STD-750		LTPD	Symbol	Limits		Unit
	Method	Details			Min	Max	
* Subgroup 1			20				
Physical dimensions	2066	(See figure 1)		---	---	---	---
* Subgroup 2			10				
Solderability	2026	-		---	---	---	---
Thermal shock (temperature cycling)	1051	Test cond. B except in step 3; T_A = 100 ± 3°C		---	---	---	---
Thermal shock (glass strain)	1056	Test cond. A		---	---	---	---

TABLE II. Group B inspection - Continued

Examination or test	MIL-STD-750		LTPD	Symbol	Limits		Unit
	Method	Details			Min	Max	
Subgroup 2 - Continued							
Seal (leak-rate)	---	MIL-STD-202, method 112, test cond. C, procedure III; test cond. B for gross leaks		---	---	$1x10^{-7}$	atm cc/sec
Moisture resistance	1021			---	---	---	---
End points:							
Collector to base cutoff current	3036	Bias cond. D; V_{CB} = -30 Vdc		I_{CBO}	---	-10	µAdc
Small-signal short-circuit forward-current transfer ratio	3206	V_{CE} = -6 Vdc; I_E = 1.0 mAdc		h_{fe}			
2N650A					30	70	---
2N651A					50	120	---
2N652A					100	225	---
* Subgroup 3			10				
Shock	2016	Nonoperating; 1,500 G, 0.5 msec, 5 blows in each orientation: X_1, Y_1, Y_2, and Z_1		---	---	---	---
Vibration fatigue	2046	Nonoperating		---	---	---	---
Vibration, variable frequency	2056	Nonoperating		---	---	---	---
Constant acceleration	2006	10,000 G; in each orientation: X_1, Y_1, Y_2, and Z_1		---	---	---	---
End points: (Same as subgroup 2)							
Subgroup 4			20				
Terminal strength (lead fatigue)	2036	Test cond. E		---	---	---	---
Subgroup 5			20				
Salt atmosphere (corrosion)	1041			---	---	---	---
End points: (Same as subgroup 2)							
Subgroup 6			λ = 5				
High temperature life (nonoperating)	1031	T_{stg} = +100°C		---	---	---	---
End points:							
Collector to base cutoff current	3036	Bias cond. D; V_{CB} = -30 Vdc		I_{CBO}	---	-15	µAdc

TABLE II. Group B inspection - Continued

Examination or test	MIL-STD-750		LTPD	Symbol	Limits		Unit
	Method	Details			Min	Max	
Subgroup 6 - Continued							
End points: Continued							
Small-signal short-circuit forward-current transfer ratio	3206	V_{CE} = -6 Vdc; I_E = 1.0 mAdc		h_{fe}			
2N650A					24	84	---
2N651A					40	144	---
2N652A					80	270	---
Subgroup 7			λ = 5				
Steady-state operation life	1026	P_T = 200 mW; V_{CB} = 24 Vdc		---	---	---	---
End points: (Same as for subgroup 6)							

TABLE III. Group C inspection

Examination or test	MIL-STD-750		LTPD	Symbol	Limits		Unit
	Method	Details			Min	Max	
Subgroup 1			20				
Barometric pressure, reduced (altitude operation)	1001	Pressure = 8 mm Hg, normal mounting; time = 60 sec		---	---	---	---
Measurement during test:							
Collector to base cutoff current	3036	Bias cond. D; V_{CB} = -45 Vdc		I_{CBO}	---	-50	μAdc
Thermal resistance	3151			θ_{J-A}	---	0.375	°C/mW

5. PREPARATION FOR DELIVERY

5.1 See MIL-S-19500, section 5.

6. NOTES

6.1 Notes. The notes specified in MIL-S-19500 are applicable to this specification.

6.2 Ordering data. Procurement document should specify:

Inspection data (see 4.3).

6.3 Changes from previous issue. The margins of this specification are marked with an asterisk to indicate where changes (additions, modifications, corrections, deletions) from the previous issue were made. This was done as a convenience only and the Government assumes no liability whatsoever for any inaccuracies in these notations. Bidders and contractors are cautioned to evaluate the requirements of this document based on the entire content irrespective of the marginal notations and relationship to the last previous issue.

Custodians:
Army - EL
Navy - EC
Air Force - 11

Review activities:
Army - EL, MI, MU
Navy - SH
Air Force - 11, 17, 85
DSA - ES

User activities:
Army - SM
Navy - CG, MC, OS, AS
Air Force - 19

Preparing activity:
Navy - EC

(Project 5961-0021-6)