MILITARY SPECIFICATION

SEMICONDUCTOR DEVICE, TRANSISTOR, NPN, SILICON, HIGH-POWER TYPES 2N1722, TX2N1722, 2N1724, AND TX2N1724

This specification is mandatory for use by all Departments and Agencies of the Department of Defense.

1. SCOPE

1.1 Scope. This specification covers the detail requirements for NPN, silicon, high-power transistors. The prefix "TX" is used on devices submitted to and passing the special process-conditioning, testing, and screening as specified in 4.5 through 4.5.9.1.

1.2 Physical dimensions. Type 2N1722, see figure 1 (TO-53).
Type 2N1724, see figure 2 (TO-61).

* 1.3 Maximum ratings.

P_T 1/ $T_A = 25°C$	P_T 2/ $T_C = 100°C$	V_{CBO}	V_{EBO}	V_{CEO}	I_C	T_{op}	T_{stg}	Safe operating area (continuous DC)
W	W	Vdc	Vdc	Vdc	Adc	°C	°C	
3	50	175	10	80	5	+175	-65 to +200	(See figure 5)

1/ Derate linearly at 20 mW/°C for T_A between +25°C and +175°C.
2/ Derate linearly at 666 mW/°C for T_C between +100°C and +175°C.

* 1.4 Primary electrical characteristics.

Limit	θ_{J-C}	V_{BE} $I_C = 2$ Adc $I_B = 200$ mAdc	$V_{CE}(sat)$ $I_C = 2$ Adc $I_B = 200$ mAdc	C_{obo} $V_{CB} = 15$ Vdc $I_E = 0$ 100 kHz $\leq f \leq$ 1 MHz	h_{FE} $V_{CE} = 15$ Vdc $I_C = 2$ Adc	$\lvert h_{fe} \rvert$ $V_{CE} = 15$ Vdc $I_C = 500$ mAdc f = 10 MHz
	°C/W	Vdc	Vdc	pf		
Min	---	---	---	---	30	1
Max	1.5	1.2	0.6	550	90	5

2. APPLICABLE DOCUMENTS

2.1 The following documents, of the issue in effect on date of invitation for bids or request for proposal, form a part of the specification to the extent specified herein.

SPECIFICATION

MILITARY

MIL-S-19500 - Semiconductor Devices, General Specification for.

STANDARDS

MILITARY

MIL-STD-202 - Test Methods for Electronic and Electrical Component Parts.
MIL-STD-750 - Test Methods for Semiconductor Devices.

(Copies of specifications, standards, drawings, and publications required by suppliers in connection with specific procurement functions should be obtained from the procuring activity or as directed by the contracting officer.)

* 2.2 Other publications. The following documents form a part of this specification to the extent specified herein. Unless otherwise indicated, the issue in effect on date of invitation for bids or request for proposal shall apply.

NATIONAL BUREAU OF STANDARDS

Handbook H28 - Screw-Thread Standards for Federal Services.

(Application for copies should be addressed to the Superintendent of Documents, Government Printing Office, Washington, D.C. 20402.)

3. REQUIREMENTS

3.1 General. Requirements shall be in accordance with MIL-S-19500, and as specified herein.

3.2 Abbreviations, symbols, and definitions. The abbreviations, symbols, and definitions used herein are defined in MIL-S-19500, and as follows:

I_{BC} - - - - - - - Forward-biased, base-collector current (dc), emitter open.

3.3 Design, construction, and physical dimensions. Transistors shall be of the design, construction, and physical dimensions shown on figures 1 and 2.

3.4 Performance characteristics. Performance characteristics shall be as specified in tables I, II, and III, and as follows:

3.4.1 Process-conditioning, testing, and screening for "TX" type. Process-conditioning, testing, and screening for the "TX" types shall be as specified in 4.5.

3.5 Marking. The following marking specified in MIL-S-19500 may be omitted from the body of the transistor at the option of the manufacturer:

(a) Country of origin.
(b) Manufacturer's identification.

3.5.1 "TX" marking. Devices in accordance with the "TX" requirements shall include the marking "JANTX" preceding the type designation.

4. QUALITY ASSURANCE PROVISIONS

4.1 Sampling and inspection. Sampling and inspection shall be in accordance with MIL-S-19500, and as specified herein.

4.2 Qualification inspection. Qualification inspection shall consist of the examinations and tests specified in tables I, II, and III.

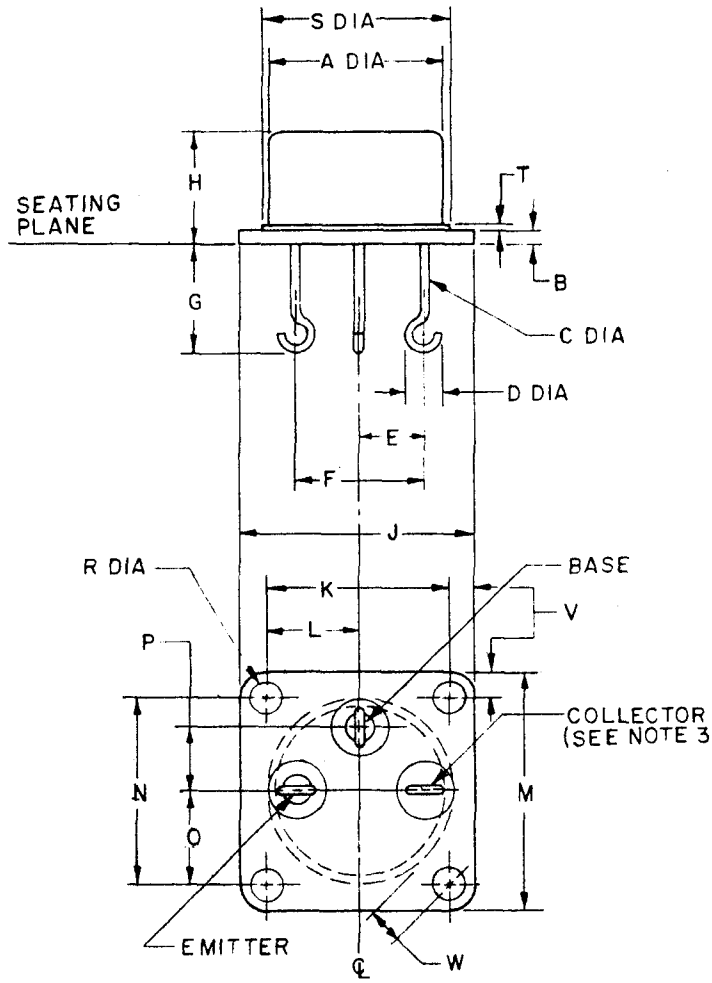

LTR	DIMENSIONS INCHES MIN	INCHES MAX	MILLIMETERS MIN	MILLIMETERS MAX	NOTES
A	.670	.680	17.02	17.27	
B	.040	.055	1.02	1.40	
C	.035	.045	.89	1.14	4
D	.130	.150	3.30	3.81	4
E	.190	.210	4.83	5.33	
F	.385	.415	9.78	10.54	
G	.370	.420	9.40	10.67	4
H	.305	.355	7.75	9.02	
J	.850	.870	21.59	22.10	
K	.670	.690	17.02	17.53	
L	.330	.350	8.38	8.89	
M	.850	.870	21.59	22.10	
N	.670	.690	17.02	17.53	
O	.330	.350	8.38	8.89	
P	.190	.210	4.83	5.33	
R	.096	.106	2.44	2.69	7
S	.765	.785	19.43	19.94	
T	.030	.065	.76	1.65	
V	.075	.105	1.91	2.67	6
W	.075	- -	1.91	- -	5

NOTES:
1. Metric equivalents (to the nearest .01 mm) are given for general information only and are based upon 1 inch = 25.4 mm.
2. Lead spacing measured at seating plane.
3. The collector shall be electrically connected to the case.
4. All three leads.
5. All four locations.
6. All eight locations.
7. All four holes.

FIGURE 1. Physical dimensions of transistor types 2N1722 and TX2N1722 (TO-53).

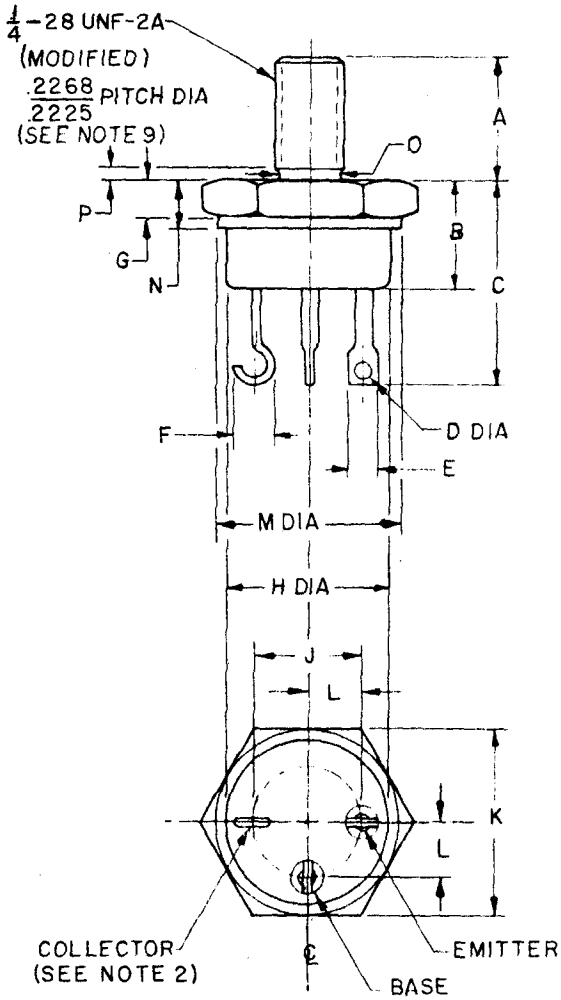

LTR	DIMENSIONS INCHES MIN	INCHES MAX	MILLIMETERS MIN	MILLIMETERS MAX	NOTES
A	.422	.455	10.72	11.56	
B	.325	.460	8.26	11.68	
C	.640	.875	16.26	22.23	6
D	.047	.072	1.19	1.83	7
E	.095	.115	2.41	2.92	7
F	- -	.150	- -	3.81	
G	.090	.150	2.29	3.81	
H	.570	.610	14.48	15.49	
J	.340	.415	8.64	10.54	
K	.667	.687	16.94	17.45	8
L	.170	.213	4.32	5.41	
M	.610	.687	15.49	17.45	
N	- -	.270	- -	6.86	
O	.220	.249	5.59	6.32	
P	- -	.090	- -	2.29	

NOTES:
1. Metric equivalents (to the nearest .01 mm) are given for general information only and are based upon 1 inch = 25.4 mm.
2. The collector shall be electrically connected to the case.
3. Lead spacing measured at seat only.
4. Position of leads in relation to hex is not controlled.
5. Maximum recommended mounting torque: 20 in-lb.
6. All three leads.
7. Two leads.
8. All three locations.
9. Threads in accordance with Handbook H28.

FIGURE 2. Physical dimensions of transistor types 2N1724 and TX2N1724 (TO-61).

4.2.1 Qualification testing. The non-TX types shall be used for qualification testing. (Upon request to the qualifying activity, qualification will be extended to include the "TX" type of the device.)

4.3 Quality conformance inspection. Quality conformance inspection shall consist of group A, B, and C inspections. When specified in the contract or order, one copy of the quality conformance inspection data, pertinent to the device inspection lot, shall be supplied with each shipment by the device manufacturer (see 6.2).

4.3.1 Group A inspection. Group A inspection shall consist of the examinations and tests specified in table I.

4.3.2 Group B inspection. Group B inspection shall consist of the examinations and tests specified in table II.

4.3.3 Group C inspection. Group C inspection shall consist of the examinations and tests specified in table III. This inspection shall be conducted on the initial lot and thereafter every 6 months during production.

4.4 Methods of examination and test. Methods of examination and test shall be as specified in tables I, II, and III, and as follows:

4.4.1 Case-temperature control for $|h_{fe}|$ test. To maintain the case temperature at less than +40°C for this test, the specified DC collector current should be applied for not longer than 10 seconds without employing a heat sink.

4.4.2 Pulse measurements. Conditions for pulse measurement shall be as specified in section 4 of MIL-STD-750.

* 4.4.3 Solderability test. The following particular procedural requirements shall apply for this test:

(a) Immersion depth for both transistors, shall be 0.200 ±0.025 inches.
(b) Dwell time (immersion in the solder bath) shall be 7 ±0.5 seconds.

TABLE I. Group A inspection

Examination or test	MIL-STD-750		LTPD		Symbol	Limits		Unit
	Method	Details	Non TX	TX		Min	Max	
Subgroup 1			10	10				
Visual and mechanical examination	2071				---	---	---	---
Subgroup 2			5	3				
Breakdown voltage, collector to emitter	3011	Bias cond. D; I_C = 200 mAdc pulsed (see 4.4.2)			BV_{CEO}	80	---	Vdc
Breakdown voltage, emitter to base	3026	Bias cond. D; I_E = 10 mAdc			BV_{EBO}	10	---	Vdc
Collector to emitter cutoff current	3041	Bias cond. C; V_{CE} = 60 Vdc			I_{CES}	---	300	μAdc

TABLE I. Group A inspection - Continued

Examination or test	MIL-STD-750		LTPD		Symbol	Limits		Unit
	Method	Details	Non TX	TX		Min	Max	
Subgroup 2 - Continued								
Collector to base cutoff current	3036	Bias cond. D; V_{CB} = 175 Vdc			I_{CBO}	---	5	mAdc
Emitter to base cutoff current	3061	Bias cond. D; V_{EB} = 7 Vdc			I_{EBO}	---	400	μAdc
* Subgroup 3			5	2				
Forward-current transfer ratio	3076	V_{CE} = 15 Vdc; I_C = 2 Adc; pulsed (see 4.4.2)			h_{FE}	30	90	---
Forward-current transfer ratio	3076	V_{CE} = 15 Vdc; I_C = 5 Adc; pulsed (see 4.4.2)			h_{FE}	15	---	---
Forward-current transfer ratio	3076	V_{CE} = 15 Vdc; I_C = 100 mAdc; pulsed (see 4.4.2)			h_{FE}	30	---	---
Collector to emitter voltage (saturated)	3071	I_C = 2 Adc; I_B = 200 mAdc; pulsed (see 4.4.2)			$V_{CE}(sat)$	---	0.6	Vdc
Base emitter voltage (saturated)	3066	Test cond. A; I_C = 2 Adc; I_B = 200 mAdc; pulsed (see 4.4.2)			$V_{BE}(sat)$	---	1.2	Vdc
* Subgroup 4			5	5				
Magnitude of common emitter small-signal short-circuit forward-current transfer ratio	3306	V_{CE} = 15 Vdc; I_C = 500 mAdc; f = 10 MHz; (see 4.4.1)			$\lvert h_{fe} \rvert$	1.0	5	---
Open-circuit output capacitance	3236	V_{CB} = 15 Vdc; I_E = 0; 100 kHz $\leq$ f $\leq$ 1 MHz			C_{obo}	---	550	pf
Subgroup 5			10	10				
High-temperature operation:		T_A = 150°C						
Collector to emitter cutoff current	3041	Bias cond. C; V_{CE} = 60 Vdc			I_{CES}	---	1.5	mAdc
Collector to emitter cutoff current	3041	Bias cond. C; V_{CE} = 120 Vdc			I_{CES}	---	10	mAdc
Low-temperature operation:		T_A = -55°C						
Forward-current transfer ratio	3076	V_{CE} = 15 Vdc; I_C = 2 Adc; pulsed (see 4.4.2)			h_{FE}	18	---	---

TABLE II. Group B inspection

Examination or test	MIL-STD-750		LTPD		Symbol	Limits		Unit
	Method	Details	Non TX	TX		Min	Max	
Subgroup 1			20	20				
Physical dimensions	2066	(See figures 1 and 2.)			---	---	---	---
* Subgroup 2			10	10				
Solderability	2026	(See 4.4.3)			---	---	---	---
Thermal shock (temperature cycling)	1051	Test cond. C			---	---	---	---
Thermal shock (glass strain)	1056	Test cond. B			---	---	---	---
Terminal strength (tension)	2036	Test cond. A; weight = 10 lbs ± 10 oz; time = 15 sec			---	---	---	---
Terminal strength (stud torque) (for 2N1724 only)	2036	Test cond. D_2; torque = 20 in-lb; time = 15 sec			---	---	---	---
Terminal strength (lead torque)	2036	Test cond. D_1; torque = 6 in-oz; time = 15 sec			---	---	---	---
Seal (leak-rate)	---	Method 112 of MIL-STD-202, test cond. C, procedure III; test cond. A for gross leaks			---	---	5×10^{-7}	atm cc/sec
Moisture resistance	1021	Omit initial conditioning			---	---	---	---
End points:								
Breakdown voltage collector to emitter	3011	Bias cond. D; I_C = 200 mAdc; pulsed (see 4.4.2)			BV_{CEO}	80	---	Vdc
Collector to emitter cutoff current	3041	Bias cond. C; V_{CE} = 60 Vdc			I_{CES}	---	300	μAdc
Forward-current transfer ratio	3076	V_{CE} = 15 Vdc; I_C = 2 Adc; pulsed (see 4.4.2)			h_{FE}	30	90	---
* Subgroup 3			10	10				
Shock	2016	Nonoperating; 1500 G, 0.5 msec, 5 blows in each orientation: X_1, Y_1, Y_2, and Z_1			---	---	---	---
Vibration, variable frequency	2056				---	---	---	---
Constant acceleration	2006	5000 G; in each orientation: X_1, Y_1, Y_2, and Z_1			---	---	---	---
End points: (Same as subgroup 2)								

TABLE II. Group B inspection - Continued

Examination or test	MIL-STD-750		LTPD		Symbol	Limits		Unit
	Method	Details	Non TX	TX		Min	Max	
Subgroup 4			20	20				
Salt atmosphere (corrosion)	1041				---	---	---	---
End points: (Same as subgroup 2)								
* Subgroup 5			10	10				
Safe operating area (continuous DC)	See figures 4 and 5	T_C = +100°C; time = 60 sec; $t_r \leq$ 6 sec; $t_f \leq$ 6 sec; 1 cycle			---	---	---	---
Test 1		V_{CE} = 10 Vdc; I_C = 5 Adc						
Test 2		V_{CE} = 80 Vdc; I_C = 250 mAdc; T_C = +145°C						
End points: (Same as subgroup 2)								
* Subgroup 6			10	10				
Unclamped inductive sweep	See figures 6 and 7				---	---	---	---
Test 1		T_A = 25°C; I_C = 5 Adc; L = 2 mH						
Test 2		T_A = 25°C; I_C = 1 Adc; L = 20 mH						
End points: (Same as subgroup 2)								
* Subgroup 7			10	10				
Clamped inductive sweep	See figures 8 and 9	T_A = 25°C; I_C = 5 Adc; L = 20 mH			---	---	---	---
End points: (Same as subgroup 2)								
* Subgroup 8			λ=10	λ=5				
High-temperature life (nonoperating)	1031	T_{stg} = +200°C			---	---	---	---

TABLE II. Group B inspection - Continued

Examination or test	MIL-STD-750		LTPD		Symbol	Limits		Unit
	Method	Details	Non TX	TX		Min	Max	
Subgroup 8 - Continued								
End points: 1/								
Breakdown voltage collector to emitter	3011	Bias cond. D; I_C = 200 mAdc; pulsed (see 4.4.2)			BV_{CEO}	80	---	Vdc
Change in collector to emitter cutoff current	3041	Bias cond. C; V_{CE} = 60 Vdc			ΔI_{CES}	---	2/	---
Change in forward-current transfer ratio	3076	V_{CE} = 15 Vdc; I_C = 2 Adc pulsed (see 4.4.2)			Δh_{FE}	---	+20 -10	% change from initial group A reading
Emitter to base cutoff current	3061	Bias cond. D; V_{EB} = 5 Vdc			I_{EBO}	---	500	μAdc
* Subgroup 9			λ=10	λ=5				
Steady-state operation life	1026	T_C = +100°C; P_C = 50 W; V_{CE} = 40 Vdc			---	---	---	---
End points: (Same as subgroup 8)								

1/ The Δ limits for the I_{CES} and h_{FE} tests apply to the change from original value measured for the sample units during group A inspection.
2/ (See footnote 1/ above.) Where original group A value is less than 50 μAdc, a Δ of 50 μAdc maximum is applicable; for original group A values from 50 μAdc to 300 μAdc, a maximum Δ of 100% of the original value is applicable.

TABLE III. Group C inspection

Examination or test	MIL-STD-750		LTPD		Symbol	Limits		Unit
	Method	Details	Non TX	TX		Min	Max	
Subgroup 1			15	15				
Barometric pressure, reduced (altitude operation)	1001	Pressure = 8 mm Hg, normal mounting; time = 60 sec			---	---	---	---
Measurement during test:								
Collector to base cutoff current	3036	Bias cond. D; V_{CB} = 175 Vdc			I_{CBO}	---	10	mAdc
* Subgroup 2			15	15				
Thermal resistance	3136	$T_1 = T_C$ = 110 ±10°C; $T_2 = T_J$ = 165 +10°C; I_{BC}(measurement) = 50 mAdc			θ_{J-C}	---	1.5	°C/W

4.5 Process-conditioning, testing, and screening for "TX" type. The procedure for process-conditioning, testing, and screening shall be in accordance with 4.5.1 through 4.5.9.1 and figure 3. Process-conditioning shall be conducted on 100 percent of the lot, prior to submission of the lot to the tests specified in tables I, II, and III. (At the option of the manufacturer, the non-TX type may be subjected to process-conditioning and testing.)

* 4.5.1 Quality assurance (lot verification). Quality assurance shall keep lot records for 3 years, minimum, monitor for compliance to the prescribed procedures, and observe that satisfactory manufacturing conditions and records on lots are maintained for these devices. The records shall be available for review by the customer at all times. The quality assurance monitoring shall include, but not be limited to: Process-conditioning, testing, and screening. (The conditioning and screening tests performed as standard-production tests need not be repeated when these are predesignated and acceptable to the Government as being equal to or more severe than specified herein and the relative process-conditioning sequence is maintained.)

4.5.2 High-temperature storage. All devices shall be stored for at least 24 hours at a minimum temperature (T_A) of 200°C.

4.5.3 Thermal shock (temperature cycling). All devices shall be subjected to thermal shock (temperature cycling) in accordance with MIL-STD-750, method 1051, test condition C, except that 10 cycles shall be continuously performed and the time at the temperature extremes shall be 15 minutes, minimum.

* 4.5.4 Reverse bias. All devices shall be subjected to a reverse bias, V_{CB} = 120 Vdc for 48 hours minimum at T_A = +150°C. The transistors shall be cooled to room ambient temperature (+25°C) before removal of the impressed voltage.

* 4.5.5 Acceleration. All devices shall be subjected to acceleration test in accordance with MIL-STD-750, method 2006, with the following exceptions: The test shall be performed one time in the Y_1 orientation only, at a peak level of 5,000 G minimum. The one minute hold-time requirement shall not apply.

4.5.6 Hermetic seal (fine-leak) test. All devices shall be fine-leak tested in accordance with MIL-STD-202, method 112, test condition C, procedure IIIa or IIIb (using the applicable conditions of 4.5.6.1 or 4.5.6.2), except that the gross-leak test shall be as specified in 4.5.6.3.

* 4.5.6.1 Conditions for procedure IIIa. The devices shall be placed in a sealed chamber and pressurized to 50 psig minimum with pure commercial grade helium gas for a minimum of 4 hours. The devices shall then be removed from the chamber and within 30 minutes be subjected to a helium leak detection test. Devices shall be rejected that exhibit a leak rate of 5×10^{-7} cubic centimeter (cc) of helium per second when measured at a differential pressure of one atmosphere. All devices exhibiting this leakage rate or greater shall be removed from the lot.

* 4.5.6.2 Conditions for procedure IIIb. The devices shall be placed in an activation tank, pressurized with Krypton 85 tracer gas in a nitrogen solution, for sufficient time to detect a leak rate of 1×10^{-8} atmospheric cubic centimeters per second (atm cc/sec). Within four hours after subjection to this pressurization, the leak rate of the devices shall be determined on an attribute basis using the general equation shown below. Any device exhibiting a leak rate equal to or greater than 1×10^{-8} atm cc/sec shall be removed from the lot. The general equation for use with radioactive gas leak test equipment is:

$$Q = \frac{R}{SKT(P_e^2 - P_i^2)}$$

where:

Q = leak rate in atm cc/sec.
R = net counting rate of tested part above background in cts/min.
S = specific activity of the test gas mixture in μCi/atm cc.
K = counting efficiency of the system for the given part in cts/min μCi.
P_e = pressure of test gas in activation tank during pressurization in atm abs.
P_i = pressure inside part under test in atm abs.
T = duration of pressurization in test gas mixture in seconds.

* 4.5.6.3 Hermetic seal (gross-leak) test. All devices shall be tested for gross-leaks by immersing in a non-corrosive suitable liquid at approximately 100° C for a minimum of 15 seconds and observed for bubbles. All devices that bubble shall be removed from the lot.

4.5.7 Preburn-in tests. The parameters I_{CES}, h_{FE}, and I_{EBO} of table IV shall be measured and the data recorded for all devices in the lot. All devices shall be handled or identified such that the delta end points can be determined after the burn-in test. All devices which fail to meet these requirements shall be removed from the lot and the quantity removed shall be noted on the lot history.

TABLE IV. Burn-in test measurements

Test	MIL-STD-750		Symbol	Limits		Unit
	Method	Details		Min	Max	
Collector to emitter cutoff current	3041	Bias cond. C; V_{CE} = 60 Vdc	I_{CES}	---	300	μAdc
Forward-current transfer ratio	3076	V_{CE} = 15 Vdc; I_C = 2 Adc; pulsed (see 4.4.2)	h_{FE}	30	90	---
Emitter to base cutoff current	3061	Bias cond. D; V_{EB} = 5 Vdc	I_{EBO}	---	400	μAdc

* 4.5.8 Burn-in test. All devices shall be operated for 168 hours minimum under the following conditions:

T_C = 100° C V_{CB} = 40 Vdc P_T = 50 W

* 4.5.9 Post burn-in tests. The parameters I_{CES}, h_{FE} and I_{EBO} of table IV shall be retested after burn-in and the data recorded for all devices in the lot. The parameters measured shall not have changed during the burn-in test from the initial value by more than the specified amount as follows:

ΔI_{CES} = 100 micro-amperes.
Δh_{FE} = ±15 percent.
ΔI_{EBO} = 100 percent or 100 micro-amperes, whichever is greater.

4.5.9.1 Burn-in test failures (screening). All devices that exceed the delta (Δ) limits of 4.5.9 or the limits of table IV after burn-in, shall be removed from the inspection lot and the quantity removed shall be noted on the lot history. If the quantity removed after burn-in should exceed 10 percent of the number of devices subjected to the burn-in test, then the entire inspection lot shall be unacceptable for the "TX" type.

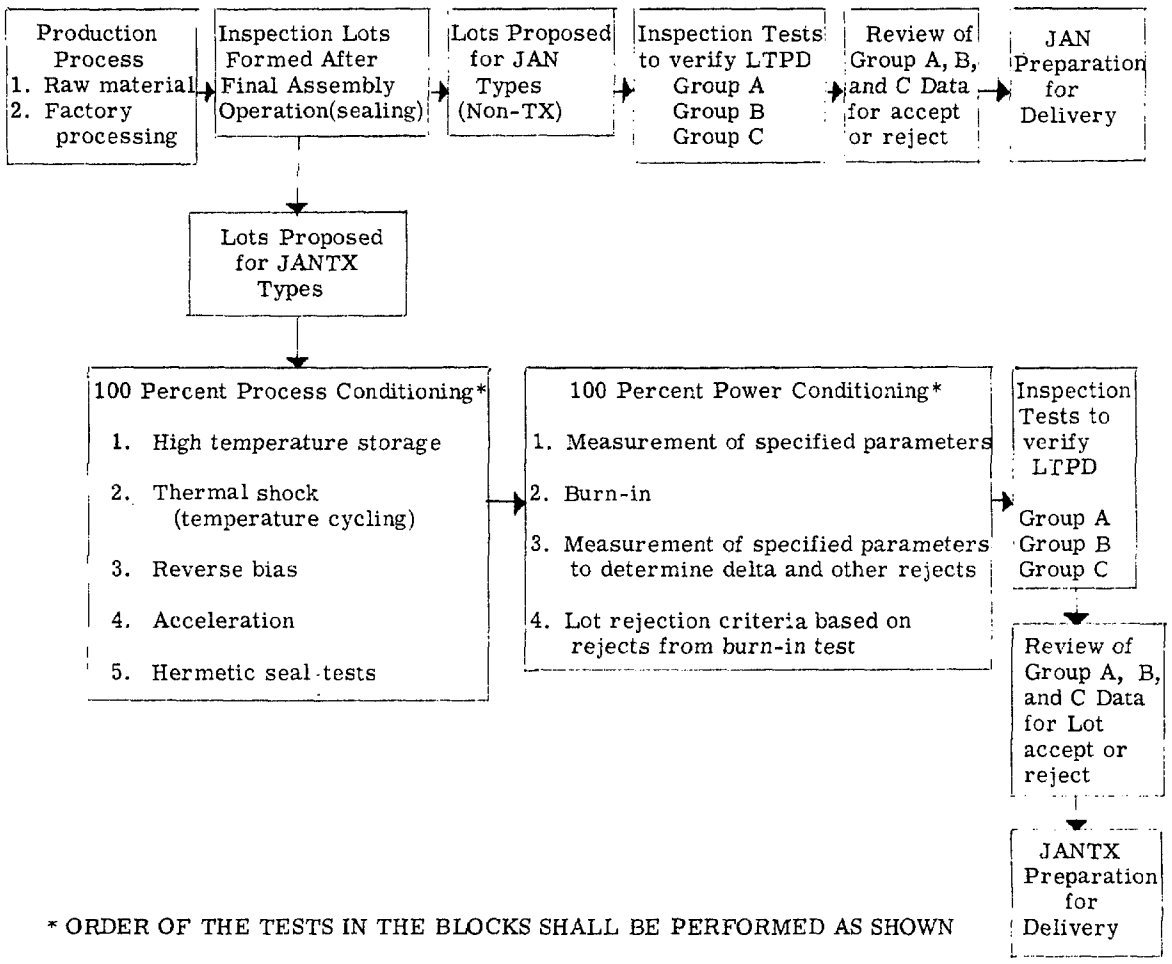

* FIGURE 3. Order of procedure diagram for JAN (Non-TX) and JANTX types.

5. PREPARATION FOR DELIVERY

5.1 See MIL-S-19500, section 5.

6. NOTES

6.1 Notes. The notes specified in MIL-S-19500 are applicable to this specification.

6.2 Ordering data. Inspection data (see 4.3).

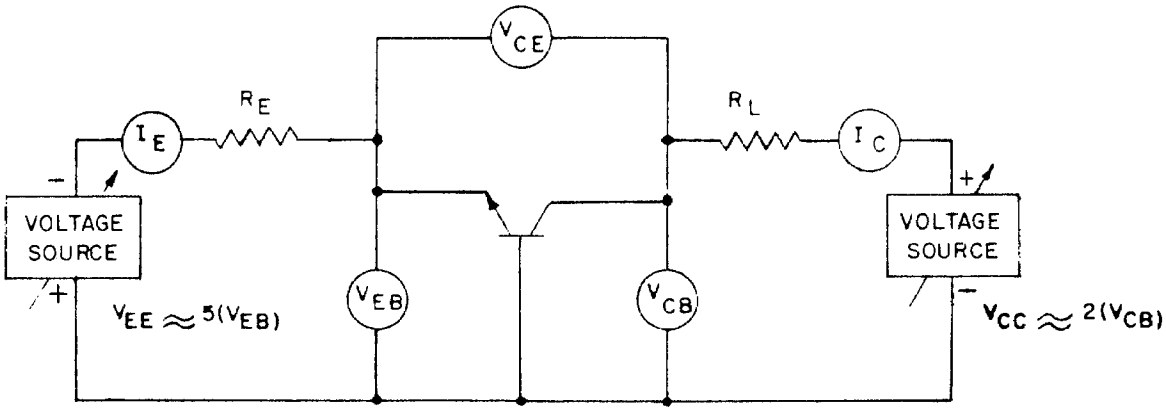

Procedure:

a. Starting with V_{CC} and V_{EE} at a low value, increase V_{CC} to approximately obtain specified V_{CE}. Increase V_{EE} to approximately obtain specified I_C. Increase V_{CC} and subsequently adjust V_{EE} to obtain specified V_{CE} and I_C. Operate the transistor at the specified temperature and for the specified time duration.

b. Decrease V_{CC} to obtain V_{CE} near zero. Turn off V_{EE}. Turn off V_{CC}.

c. The transistor shall be considered a failure if collector current (I_C) varies ±10% during operation, or exceeds the end points.

FIGURE 4. Safe operating area test circuit (continuous DC).

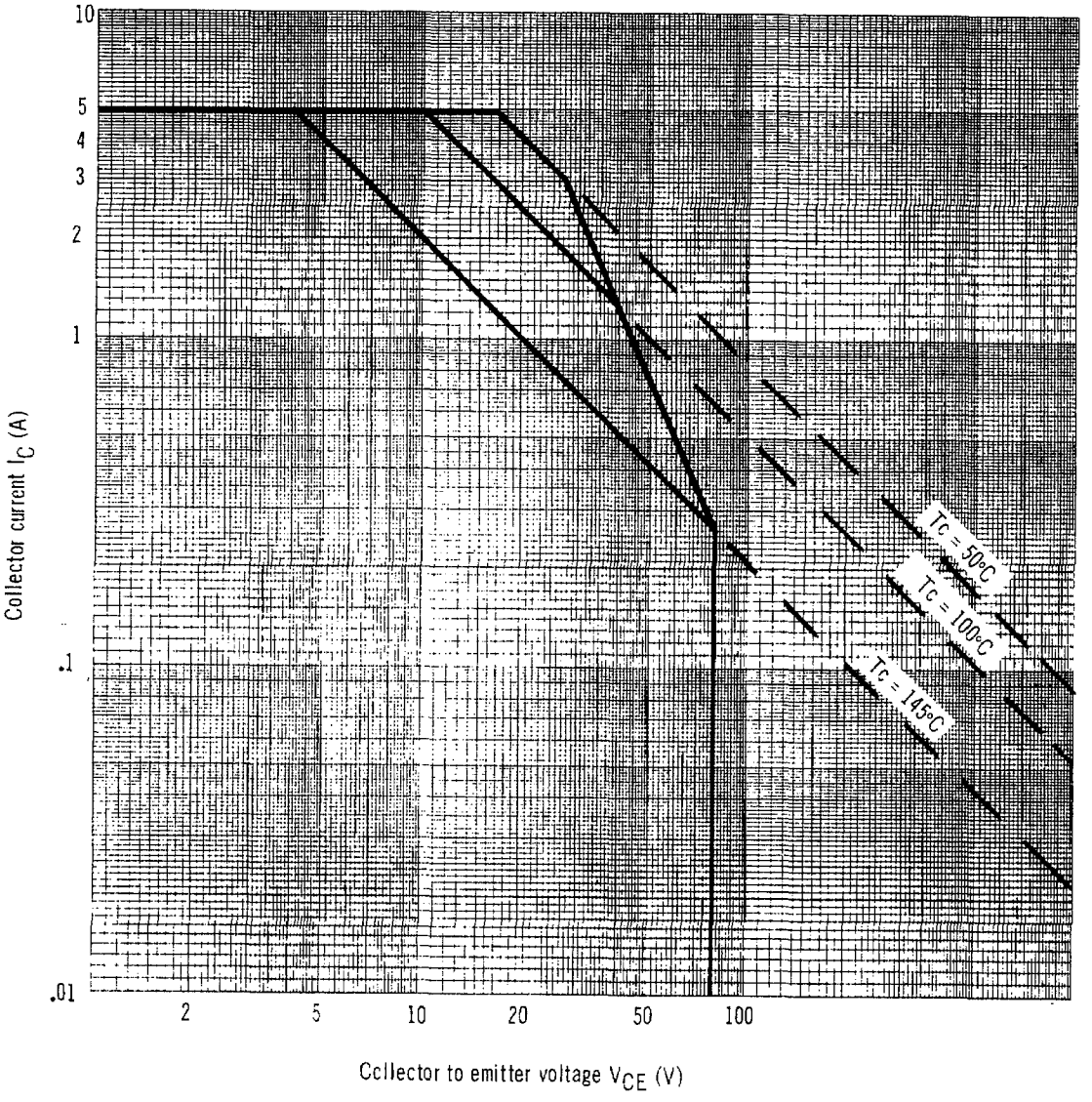

FIGURE 5. Maximum safe operating area graph - Continuous DC.

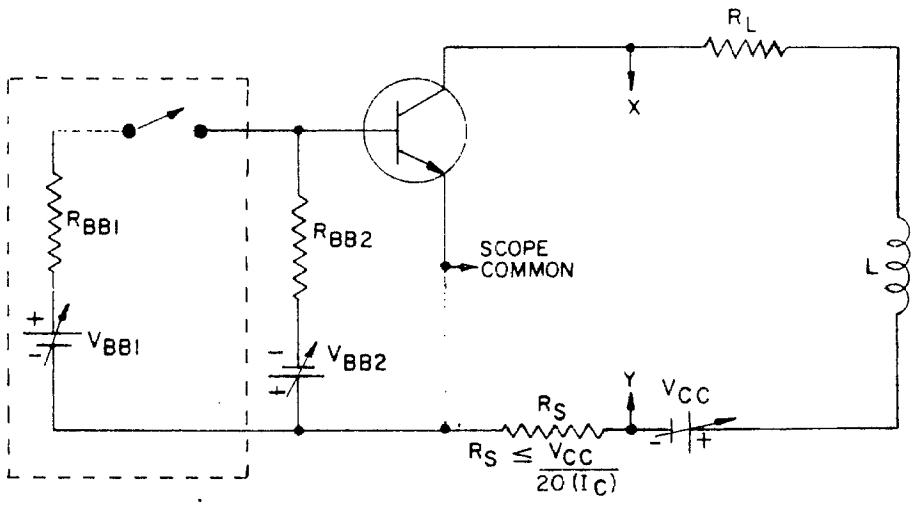

Test No. 1: T_A = 25°C
I_C = 5 Adc
R_{BB1} = 5 ohms
V_{BB1} = 15 Vdc
R_{BB2} = 10 ohms
V_{BB2} = 5 Vdc
R_S = .1 ohm 1% non-inductive
V_{CC} = 18 Vdc
L = 1 mH, .56 ohm (Miller 7870. Two each are used in series, or equivalent).
R_L = 5 ohms

Note: Duty cycle ≤10%.

Test No. 2: T_A = 25°C
I_C = 1 Adc
R_{BB1} = 5 ohms
V_{BB1} = 8 Vdc
R_{BB2} = 10 ohms
V_{BB2} = 5 Vdc
R_S = .1 ohm 1% non-inductive
V_{CC} = 13.5 Vdc
L = 20 mH, .22 ohm (Stancor C-2688, 10 mH, .11 ohm. Two each are used in series, or equivalent).
R_L = 5 ohms

Note: Duty cycle ≤ 10%

Procedure: Starting at a low value, adjust V_{BB2} and V_{CC} to the specified levels. With the duty cycle and repetition rate preset to specified conditions, increase V_{BB1} voltage to achieve the specified I_C; and the output wave form (I_C vs V_{CE}) shall be observed on the scope.

When the transistor is turned off (switched), the observed trace shall be a smooth curve between saturation and cut-off. Any oscillations or inconsistencies on the trace shall be cause for rejection.

FIGURE 6. Unclamped inductive sweep test circuit.

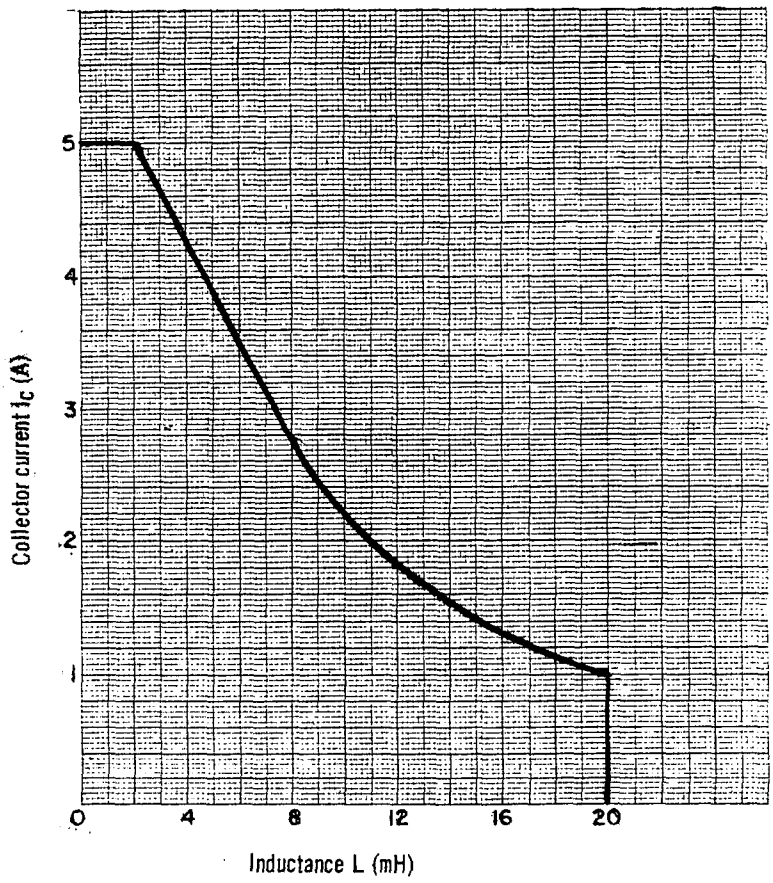

FIGURE 7. Safe operating area for switching between saturation and cutoff - unclamped inductive load.

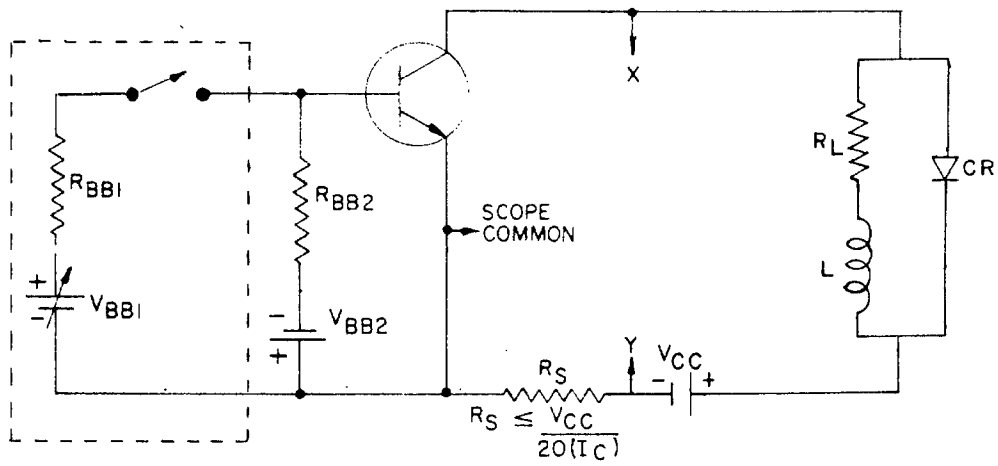

T_A = 25°C
I_C = 5 Adc
R_{BB1} = 5 ohms
V_{BB1} = 15 Vdc
R_{BB2} = 10 ohms
V_{BB2} = 5 Vdc
R_S = .1 ohm, 1% non-inductive
R_L = 35 ohms
C_R = 1N1204
L = 20 mH, .22 ohm (Stancor C-2688, 10 mH, .11 ohm, two each are used in series, or equivalent).
V_{CC} = 175^{+0}_{-5} Vdc

NOTE: Clamp voltage, all types = 175^{+0}_{-5} Vdc.

Procedure: Starting at a low value, adjust V_{BB2} and V_{BB1} to the specified levels. With a 10% duty cycle and 5 ms pulse width preset, increase V_{CC} voltage to achieve the specified I_C; and the output waveform (I_C vs V_{CE}) shall be observed on the scope.

When the transistor is turned off (switched), the observed trace shall be a smooth curve between saturation and cut-off. Any oscillations or inconsistencies on the trace shall be cause for rejection.

FIGURE 8. Clamped inductive sweep test circuit.

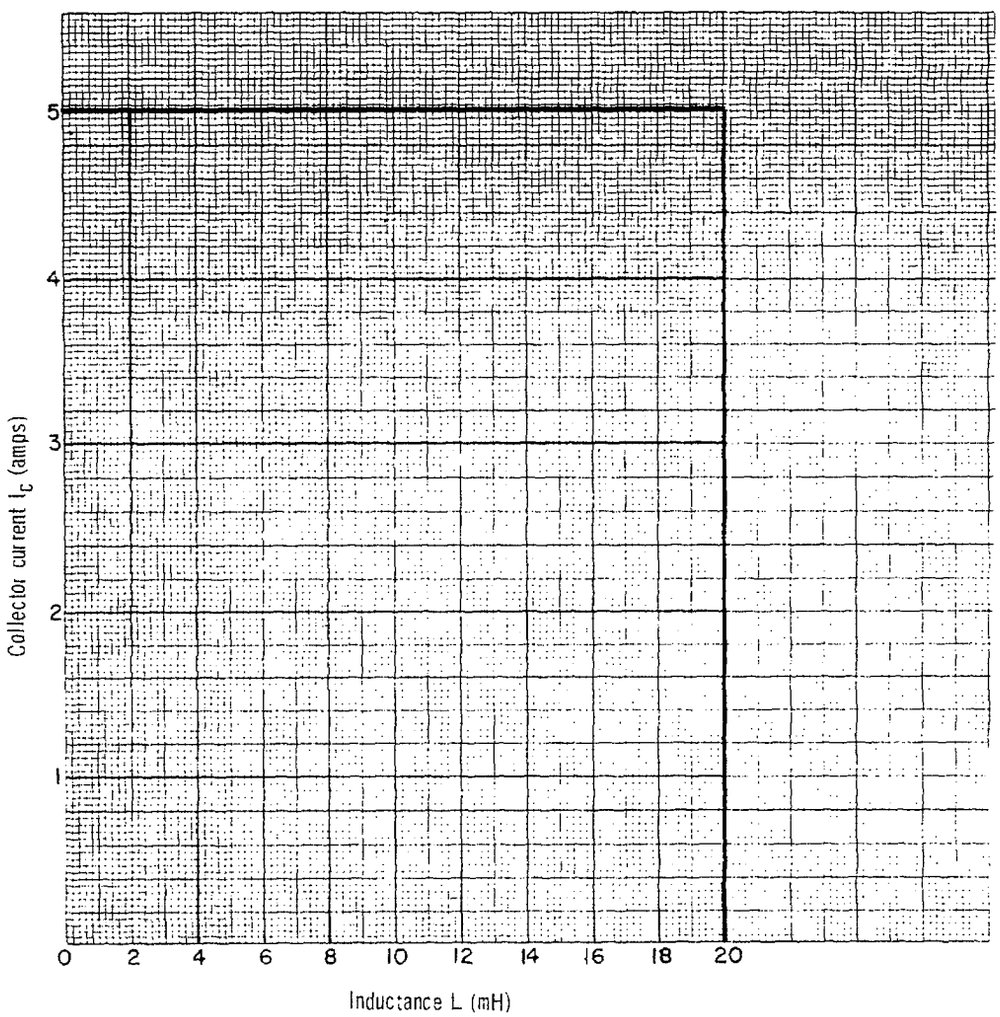

FIGURE 9. Safe operating area for switching between saturation and cutoff - clamped inductive load.

6.3 Changes from previous issue. The margins of this specification are marked with an asterisk to indicate where changes (additions, modifications, corrections, deletions) from the previous issue were made. This was done as a convenience only and the Government assumes no liability whatsoever for any inaccuracies in these notations. Bidders and contractors are cautioned to evaluate the requirements of this document based on the entire content irrespective of the marginal notations and relationship to the last previous issue.

Custodians:
Army - EL
Navy - EC
Air Force - 11

Review activities:
Army - EL, MU, MI
Navy - EC, SH
Air Force - 11, 17, 85
DSA - ES

User activities:
Army - EL, SM
Navy - CG, MC, OS, AS
Air Force - 19

Preparing activity:
Army - EL

(Project 5961-0091-1)

*U.S. GOVERNMENT PRINTING OFFICE: 1969-343-225/916