MIL-S-19500/263A(EL)
15 MAY 1963

SUPERSEDING
MIL-S-19500/263 (EL)
26 FEBRUARY 1963

MILITARY SPECIFICATION

TRANSISTOR, NPN, SILICON, POWER TYPES 2N1714 THROUGH 2N1717

1. SCOPE

1.1 Scope. This specification covers the detail requirements for silicon, NPN, transistors for relatively high-power circuit applications, and having the following particular, differential characterists at $T_A = +25° \pm 3°$ C. (See 3.2 herein.) :

	h_{FE} [1] (at: V_{CE}=5 Vdc I_C=10 mAdc)		h_{FE} [1] (at: V_{CE}=5 Vdc I_C=200 mAdc)		V_{BEF} (at: V_{CE}=60 Vdc)		V_{BEF} (at: V_{CE}=100 Vdc)	
					Vdc		Vdc	
	Min	Max	Min	Max	Min	Max	Min	Max
2N1714	10		20	60		1.0		
2N1715	10		20	60				2.0
2N1716	20		40	120		1.0		
2N1717	20		40	120				2.0

	BV_{CEO} [1] (at: I_C=30 mAdc I_B=0)		I_{CEO} (at: V_{CE}=60 Vdc V_{BE}=0)		I_{CEO} (at: V_{CE}=80 Vdc V_{BE}=0)		I_{CEO} (at: V_{CE}=150 Vdc V_{BE}=0)	
	Vdc		uAdc		uAdc		uAdc	
	Min	Max	Min	Max	Min	Max	Min	Max
2N1714	60			2.0		50		
2N1715	100			2.0				50
2N1716	60			2.0		50		
2N1717	100			2.0				50

[1] Pulsed: 300 usec pulse width: duty cycle ≤ 2.0%.

1.2 Maximum ratings.

P_C [1]	P_C [2]	V_{CB}	I_C	θ_{j-c}	T_j	T_{stg}	Alt.
mW	W	Vdc	Adc	°C/W	°C	°C	ft.
800	10	6.0	0.75	7.5	+175	−65 to +200	100,000

[1] This power dissipation at ambient, free-air temperature of + 25° C. For ambient, free-air temperatures between + 25° C. and + 175° C., derate linearly at rate of 5.33 mW/° C.

[2] This power dissipation at case temperature of + 100° C. For case temperatures between + 100° C. and + 175° C, derate linearly at rate of 134 mW/° C.

FSC 5960

2. APPLICABLE DOCUMENTS

2.1 The following documents, of the issue in effect on date of invitation for bids or request for proposal, form a part of this specification to the extent specified herein:

SPECIFICATIONS

MILITARY

MIL-S-19500 —Semiconductor Devices, General Specification For.

STANDARDS

MILITARY

MIL-STD-750 — Test Methods For Semiconductor Devices.

(Copies of specifications, standards, drawings, and publications required by contractors in connection with specific procurement functions should be obtained from the procuring activity or as directed by the contracting officer. Both the title and number or symbol should be stipulated when requesting copies.)

3. REQUIREMENTS

3.1 **General.** Requirements for the transistors shall be in accordance with MIL-S-19500, and as otherwise specified herein.

3.2 **Abbreviations and Symbols.** The abbreviations and symbols used herein are defined in MIL-S-19500 and as follows:

I_{BC} . . . . . forward biased, base-collector current, dc, emitter open (current flow in forward direction).

P_C . . . . . collector power dissipation.

3.3 **Design and construction.** The transistors shall be of the design, construction, and physical dimensions specified in figure 1 herein.

3.3.1 *Lead arrangement.* The lead arrangement on the transistor shall be as indicated in Figure 1 herein.

3.3.2 *Operating position.* The transistors shall be capable of proper operation in any position.

3.4 **Performance characteristics.** The transistor performance characteristics shall be as specified in tables I, II, and III herein. Except where specifically differentiated for respective transistor types (see 1.1, 1.2, and tables I, II, and III herein), the performance requirements, including characteristics, ratings, and test conditions, apply equally to all transistor types covered herein.

3.5 **Marking.** The transistor shall be marked in accordance with MIL-S-19500 and as follows. When the diminutive size or lack of suitable surface area prevents routine marking, on the device, of all items required by MIL-S-19500, the following items may be omitted in the following preferred order: color-band type identification (if specified for the device), country of origin, manufacturer's identification. Where only a minimum of items can suitably be marked on the device, first consideration shall be given to marking the complete type designation (see 3.5.1 herein), and then to inclusion of the acceptance date and inspection lot identification. However, all required marking shall be placed on the unit package.

3.5.1 *Complete type-designation marking.* Complete type-designation marking of transistors procured on Department of Army contracts, and which have passed Government inspection and comply with all requirements of this specification, shall consist of: "USA-manufacturer's qualification code letters-transistor designation (including any assigned reliability indicator)." The letters JAN or any abbreviation thereof shall not be used. If any specification waiver has been granted, the combination "USA-manufacturer's qualification code letters" shall not be used to complete the type-designation marking.

4. QUALITY ASSURANCE PROVISIONS

4.1 **General.** Except as otherwise specified herein, the responsibility for inspection, general procedures for acceptance, classification of inspection, and inspection conditions and methods of test shall be in accordance with MIL-S-19500, Quality Assurance Provisions.

4.1.1 *Responsibility for inspection.* Unless otherwise specified in the contract or purchase order, the supplier is responsible for the performance of all inspection requirements as specified herein. Except as otherwise specified, the supplier may utilize his own facilities or any commercial laboratory acceptable to the Government. The Government reserves the right to perform any of the inspections set forth in the specification where such inspections are deemed necessary to assure supplies and services conform to prescribed requirements.

4.2 **Qualification and Acceptance Inspection.** Qualification and Acceptance Inspection shall be in accordance with MIL–S–19500, Quality Assurance Provisions, and as otherwise specified herein. Groups A, B, and C Inspection shall consist of the examinations and tests specified in tables I, II, and III, respectively, herein. Acceptance Inspection shall include inspection of preparation for delivery (see 5.1 herein).

4.2.1 *Specified LTPD for subgroups.* The LTPD specified for a subgroup in tables I, II, and III herein shall apply for all of the tests, combined, in the subgroup.

4.2.2 *Disposition of sample units.* Sample units that have been subjected to group B, subgroup 4 test(s) shall not be delivered on the contract or order. Sample units that have been subjected to and have passed group B, subgroups 1, 2, 3, 5, 6, and 7 tests, and group C, subgroups 1 and 2 tests may be delivered on the contract or order provided that, after group B and C inspection is terminated, those sample units are subjected to and pass group A inspection. Defective units from any sample group that may have passed group inspection shall not be delivered on the contract or order until the defect(s) has been remedied to the satisfaction of the Government.

4.3 **Particular examination and test procedures.**

4.3.1 *Pulse conditions for particular tests.* The following tests shall be performed in the necessary circuit, with a pulse width = 300 usec, and duty cycle = 2.0 per cent, applied:

Breakdown voltage, collector-to-emitter
Static forward-current transfer ratio
Base-to-emitter voltage
Saturation voltage, collector-to-emitter

4.3.2 *Breakdown Voltage, Collector-To-Emitter test.* The procedural guidance in (a), below, shall replace the data for this test existing in paragraph 3 of Method 3011 in MIL–STD–750:

(a) The resistor R_1 is a current-limiting resistor and should be of sufficiently high resistance to avoid excessive current flowing through the transistor under test and current meter. The voltage shall be increased with Bias Condition D applied from zero until the specified current is reached. The transistor is acceptable if the V_{CE} applied at the specified current is greater than the specified minimum limit for BV_{CEO}.

(b) Note: Due to "snapback" phenomena associated with these transistors, the refined procedural data in (a) above are intended to insure nonacceptance of transistors that have not gone into breakdown at the specified minimum BV_{CEO} limit (as tested, necessarily, at the specified test-current condition).

4.3.3 *Base-To-Emitter Voltage test.* The specified currents shall be applied to applicable terminals under the conditions specified (see 4.3.1 herein), and the base-to-emitter voltage shall then be measured. (The data in MIL–STD–750, Method 3066, Test Cond. A, may be referred to as a guide for test procedure.)

4.3.4 *Case-temperature control for h_{fe} test.* To maintain the case temperature at less than +40° C for this test, the specified d-c collector current should be applied for not longer than 10 seconds without employing a heat sink.

4.4 **Mechanical damage resulting from tests.** Except for inherently deforming mutilating, or dismembering mechanical-stress tests to which samples are subjected, there

shall be no evidence of mechanical damage to any sample as a result of any of the Group A, B, or C tests.

TABLE I. *Group A inspection*

Test Method per MIL-STD-750	Examination or test	Conditions	LTPD	Symbol	Limits Min.	Limits Max.	Unit
	Subgroup 1		10				
2071	Visual and mechanical examination						
	Subgroup 2		5				
3041	Collector-to-emitter cut-off current.	Test Cond. C. $T_A = +25° \pm 3°$ C. $V_{CE} = 60$ Vdc $V_{EB} = 0$	.....	I_{CES}	.....	2.0	uAdc
3041	Collector-to-emitter cut-off current.	Test Cond. C $T_A = +25° \pm 3°$ C. $V_{EB} = 0$					
	2N1714, 2N1716....	$V_{CE} = 90$ Vdc	.....	I_{CES}	.....	50	uAdc
	2N1715, 2N1717....	$V_{CE} = 150$ Vdc	.....	I_{CES}	.....	50	uAdc
3041	Collector-to-emitter cut-off current.	Test Cond. D $T_A = +25° \pm 3°$ C. $I_B = 0$					
	2N1714, 2N1716....	$V_{CE} = 50$ Vdc	.....	I_{CEO}	.....	50	uAdc
	2N1715, 2N1717....	$V_{CE} = 90$ Vdc	.....	I_{CEO}	.....	50	uAdc
3036	Collector-to-base cutoff current.	Test Cond. D $T_A = +25° \pm 3°$ C. $V_{CB} = 3$ Vdc $I_E = 0$	.....	I_{CBO}	.....	1.0	uAdc
3061	Emitter-to-base cutoff current.	Test Cond. D $T_A = +25° \pm 3°$ C. $V_{EB} = 3$ Vdc $I_C = 0$	.....	I_{EBO}	.....	10	uAdc
3061	Emitter-to-base cutoff current.	Test Cond. D $T_A = +25° \pm 3°$ C. $V_{EB} = 6$ Vdc $I_C = 0$	.....	I_{EBO}	.....	10	uAdc
	Subgroup 3		5				
3011	Breakdown voltage, collector-to-emitter.	[2]; [3] Test Cond. D $I_C = 30$ mAdc $I_B = 0$					
	2N1714, 2N1716....	.....	.....	BV_{CEO}	60	.....	Vdc
	2N1715, 2N1717....	.....	.....	BV_{CEO}	100	.....	Vdc
3020	Floating potential:.....	Voltmeter input resistance ≥ 10 Meg.					
	2N1714, 2N1716....	$V_{CB} = 60$ Vdc	.....	V_{EBF}	.....	1.0	Vdc
	2N1715, 2N1717....	$V_{CB} = 100$ Vdc	.....	V_{EBF}	.....	2.0	Vdc
3076	Static forward-current transfer ratio:	[2] $V_{CE} = 5$ Vdc $I_C = 10$ mAdc					
	2N1714, 2N1715....	.....	.....	h_{FE}	10		
	2N1716, 2N1717....	.....	.....	h_{FE}	20		
3076	Static forward-current transfer ratio:	[2] $V_{CE} = 5$ Vdc $I_C = 200$ mAdc					
	2N1714, 2N1715....	.....	.....	h_{FE}	20	60	
	2N1716, 2N1717....	.....	.....	h_{FE}	40	120	

TABLE I. *Group A inspection—(Cont'd).*

Test Method per MIL-STD-750	Examination or test	Conditions[1]	LTPD	Symbol	Limits Min.	Limits Max.	Unit
[4]	Base-to-emitter voltage...	[2] $I_C = 200$ mAdc $I_B = 20$ mAdc	.....	V_{BE}	.....	1.6	Vdc
3071	Saturation voltage, collector-to-emitter.	[2] $I_C = 200$ mAdc $I_B = 20$ mAdc	.....	$V_{CE}(sat)$	.....	2.0	Vdc
	Subgroup 4		10				
[5]	High-temperature operation:	$T_A = +175° +5° -0°$ C.					
3041	Collector-to-emitter cutoff current.	Test Cond. C $V_{CE} = 60$ Vdc $V_{EB} = 0$	.....	I_{CES}	.....	500	uAdc
[5]	Low-temperature operation:	$T_A = -55° +0° -5°$ C.					
3076	Static forward-current transfer ratio:	[2] $V_{CE} = 5$ Vdc $I_C = 200$ mAdc					
	2N1714, 2N1715 ...	.....	.....	h_{FE}	10		
	2N1716, 2N1717 ...	.....	.....	h_{FE}	20		
	Subgroup 5		10				
3306	Small-signal short-circuit forward-current transfer ratio.	$f = 16$ Mc $V_{CE} = 10$ Vdc $I_C = 100$ mAdc	.....	h_{fe}	1.0		
3236	Output capacitance (open circuit, common base).	[6] $f = 1$ Mc $V_{BC} = 10$ Vdc $I_E = 0$	.....	C_{ob}	.....	50	pf

[1] See 3.4 herein.
[2] See 4.3.1 herein.
[3] See 4.3.2 herein.
[4] See 4.3.3 herein.
[5] Measurement shall be made after thermal equilibrium has been reached at the temperature specified.
[6] See 4.3.4 herein.

TABLE II. *Group B inspection*

Test Method per MIL-STD-750	Examination or test	Conditions[1]	LTPD	Symbol	Limits Min.	Limits Max.	Unit
	Subgroup 1		20				
2066	Physical dimensions						
	Subgroup 2		15				
2026	Solderability						
1051	Temperature cycling. ...	Test Cond. C. 10 cycles					
1056	Thermal Shock (glass strain).	Test Cond. A					
1021	Moisture resistance						
	End-point tests:						
3041	Collector-to-emitter cutoff current.	Test Cond. C. $V_{CE} = 60$ Vdc $V_{KB} = 0$	.....	I_{CES}	.....	4.0	uAdc
3011	Breakdown voltage, collector-to-emitter:	[2]; [3] Test Cond. D $I_C = 30$ mAdc $I_B = 0$					

TABLE II. *Group B inspection—(Cont'd).*

Test Method per MIL-STD-750	Examination or test	Conditions [1]	LTPD	Symbol	Limits Min.	Limits Max.	Unit
	2N1714, 2N1716			BV_{CBO}	60		Vdc
	2N1715, 2N1717			BV_{CBO}	100		Vdc
3076	Static forward-current transfer ratio:	[2] $V_{CE}=5$ Vdc $I_C=200$ mAdc					
	2N1714, 2N1715			h_{FE}	16	72	
	2N1716, 2N1717			h_{FE}	32	144	
	Subgroup 3		15				
2016	Shock	Non-operating G=500 5 blows of 1.0 msec ea. in orientations X1, Y1, Y2, Z1 (total=20 blows).					
2046	Vibration fatigue	Nonoperating G=10					
2056	Vibration, variable frequency.						
2006	Constant acceleration (centrifuge).	G=10,000 Orientations X1, Y1, Y2, Z1					
	End-point tests: Same as for Subgroup 2, above.						
	Subgroup 4		20				
2036	Tension	Test Cond. A Weight=1 lb $^{+3\text{ oz.}}_{-0}$ Duration=30 sec.					
2036	Lead fatigue	Test Cond. E					
	End-point tests: Same as for Subgroup 2, above.						
	Subgroup 5		20				
1041	Salt atmosphere (corrosion).						
	End-point tests: Same as for Subgroup 2, above.						
	Subgroup 6		λ=10				
1031	High-temperature life	$T_{stg}=200°\ ^{+5°}_{-0}$ C.					
	End-point tests: Same as for Subgroup 2, above.						
	Subgroup 7		λ=10				
1026	Steady state operation life.	$T_A=+25°\pm3°$ C. $V_{CB}=40$ Vdc $P_C=0.8$ W					
	End-point tests: Same as for Subgroup 2, above.						

[1] See 3.4 herein.
[2] See 4.3.1 herein.
[3] See 4.3.2 herein.

TABLE III. *Group C inspection* [1]

Test Method per MIL-STD-750	Examination or test	Conditions[2] [3]	LTPD	Symbol	Limits Min.	Limits Max	Unit
	Subgroup 1		15				
3136	Thermal resistance (junction-to-case).	$T_s = T_T = +165° \pm 10$ C. $T_1 = T_C = +110 \pm 10°$ C. $I_{BC} = 50$ mAdc	.....	θ_{J-C}	.....	7.5	°C/W
1001	Barometric pressure, reduced (altitude operation):	Pressure = 8.2 mmHg t = 1 min.					
3041	Collector-to-emitter cutoff current:	Test Cond. C $T_A = +25° \pm 3°$ C. $V_{EB} = 0$					
	2N1714, 2N1716....	$V_{CE} = 90$ Vdc	.....	I_{CES}	.....	100	uAdc
	2N1715, 2N1717....	$V_{CE} = 150$ Vdc	.....	I_{CES}	.....	100	uAdc
	Subgroup 2		15				
3005	Burnout by pulsing.....	$T_C = 100°$ C. Pre-pulse Cond.: $I_{BC} = 0$ $I_B = 0$ Pulse Cond.: $I_{BC} = 750$ mAdc $I_B = 0$ $t_p = 30 \pm 5$ sec for 1 cycle $T_C \leq 100°$ C.					
	End-point tests:						
3076	Static forward-current transfer ratio:	[3] $V_{CE} = 5$ Vdc $I_C = 200$ mAdc					
	2N1714, 2N1715....	.....	.....	h_{FE}	20	60	
	2N1716, 2N1717....	.....	.....	h_{FE}	40	120	

[1] Periodicity for performance of Group C inspection = initial lot, and thereafter on a lot every 90 days or every fifth lot, whichever occurs first.
[2] See 3.4 herein.
[3] See 4.3.1 herein.

5. PREPARATION FOR DELIVERY

5.1 Preparation for delivery. Preparation for delivery shall be in accordance with MIL-S-19500.

6. NOTES

6.1 Notes. The notes included in MIL-S-19500, with the following exceptions, are applicable to this specification.

6.2 Re-evaluation or verification inspection. The LTPD method is exceptionally well suited for inspection at source, since it provides a high degree of assurance (90 per cent confidence) that the lot represented has a proportion defective less than the specified LTPD value. However, the LTPD method is not suitable for inspection performed subsequent to source inspection since it provides, at most, a 10 per cent confidence that the lot represented by a failed sample actually contains a proportion defective in excess of the specified LTPD value. As a result, whenever the quality of a lot is re-evaluated or verified by sampling inspection subsequent to the supplier's satisfactory demonstrations of compliance with the quality requirements, lot disposition should be based on a sampling plan which provides reasonable assurance that any lot rejected contains a proportion

defective greater than the specified LTPD or λ value for any individual subgroup. When deemed necessary, the purchase order should specify the detailed criteria for lot disposition.

6.3 **Qualification.** With respect to products requiring qualification, awards will be made only for such products as have, prior to the time set for opening of bids, been tested and approved for inclusion in Qualified Products List (QPL)-19500, supplement (Army), whether or not such products have actually been so listed by that date. Information pertaining to qualification of products covered by this specification should be requested from the Chief, Standardization Engineering Division, U. S. Army Electronics Materiel Support Agency, Fort Monmouth, N. J. ATT.: SELMS-PSM-3.

Notice: When Government drawings, specifications, or other data are used for any purpose other than in connection with a definitely related Government procurement operation, the United States Government thereby incurs no responsibility nor any obligation whatsoever; and the fact that the Government may have formulated, furnished, or in any way supplied the said drawings, specifications, or other data is not to be regarded by implication or otherwise as in any manner licensing the holder or any other person or corporation, or conveying any right or permission to manufacture, use, or sell any patented invention that may in any way be related thereto.

Custodian:

Army—EL

Preparing activity:

Army—EL

Project No. 5960-A426

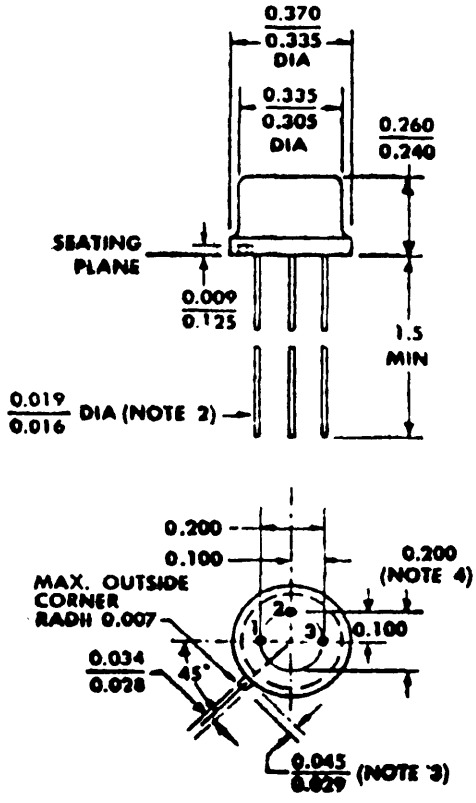

NOTE 1: The collector is electrically connected to the case.

NOTE 2: The specified lead diameter applies in the zone between .050" and .250" from the seating plane. Between .250" and 1.5" a maximum of .021" diameter is held. Outside of these zones the lead diameter is not controlled.

NOTE 3: Measured from maximum diameter of the actual device.

NOTE 4: Leads having maximum diameter (0.019") measured in gauging plane 0.054" + 0.001" - 0.000" below the seating plane of the device shall be within .007" of their true locations relative to a maximum-width tab.

NOTE 5: Electrode 1 - Emitter; Electrode 2 - Base; Electrode 3 - Collector.

FIGURE 1. *Outline and dimensions.*