The documentation and process conversion measures necessary to comply with this revision shall be completed by 4 June 1992

INCH-POUND

MIL-S-19500/380B
4 June 1991
SUPERSEDING
MIL-S-19500/380A(EL)
17 September 1968

MILITARY SPECIFICATION

SEMICONDUCTOR DEVICE, TRANSISTOR, NPN, SILICON, POWER
TYPES 2N4865, 2N5250, 2N5251, JANTX, JANTXV, AND JANS

This specification is approved for use by all Departments and Agencies of the Department of Defense.

1. SCOPE

1.1 Scope. This specification covers the detail requirements for NPN power transistors. Three levels of product assurance are provided for each device type as specified in MIL-S-19500.

1.2 Physical dimensions. See figure 1 (TO-114).

1.3 Maximum ratings.

Type	P_T 1/									
	T_C = +25°C	T_C = +50°C	T_C = +100°C	$R_{\theta JC}$	V_{CBO}	V_{CEO}	V_{EBO}	I_C 2/	$T_{(op)}$ case	T_{STG}
	W	W	W	°C/W	V dc	V dc	V dc	A dc	°C	°C
2N4865	350	300	200	0.5	100	80	10	50	3/	4/
2N5250	350	300	200	0.5	125	100	10	50	3/	4/
2N5251	350	300	200	0.5	180	150	10	50	3/	4/

1/ Linear derating factor = 2.0 W/°C ≤ T_C = +200°C.
2/ Pulsed (see 4.3.1 herein) = 90 A.
3/ Temperature range = -55°C to +200°C.
4/ Temperature range = -65°C to +200°C.

Beneficial comments (recommendations, additions, deletions) and any pertinent data which may be of use in improving this document should be addressed to: Commander, US Army Laboratory Command, ATTN: SLCET-R-S, Fort Monmouth, NJ 07703-5302, by using the Standardization Document Improvement Proposal (DD Form 1426) appearing at the end of this document or by letter.

AMSC N/A FSC 5961

DISTRIBUTION STATEMENT A. Approved for public release; distribution is unlimited.

1.4 Primary electrical characteristics.

Type	h_{FE} 1/								$V_{BE(sat)}$ 1/			
	I_C = 90 A dc V_{CE} = 5 V dc		I_C = 70 A dc V_{CE} = 5 V dc		I_C = 40 A dc V_{CE} = 5 V dc		I_C = 20 A dc V_{CE} = 5 V dc		I_C = 70 A dc I_B = 10 A dc		I_C = 40 A dc I_B = 4 A dc	
	Min	Max	Min	Max	Min	Max	Min	Max	Min	Max	Min	Max
									V dc	V dc	V dc	V dc
2N4865	5.0	---	10	40	15	50	30	90	---	2.5	---	1.8
2N5250	5.0	---	10	40	15	50	30	90	---	2.5	---	1.8
2N5251	5.0	---	10	40	15	50	30	90	---	2.5	---	1.8

Type	V_{CE}(sat) 1/				h_{fe}		t_{on}	t_s	t_f	t_{on}	t_s	t_f
	I_C = 70 A dc I_B = 10 A dc		I_C = 40 A dc I_B = 4 A dc		f = 10 MHz V_{CE} = 10 V dc I_C = 5 A dc		I_C = 70 A dc (see figure 2)			I_C = 40 A dc (see figure 2)		
	Min	Max	Min	Max	Min	Max	Max	Max	Max	Max	Max	Max
	V dc	V dc	V dc	V dc			µs	µs	µs	µs	µs	µs
2N4865		2.0		1.0	1.0	7.0	2.0	1.5	0.5	2.0	1.5	0.5
2N5250		2.0		1.0	1.0	7.0	2.0	1.5	0.5	2.0	1.5	0.5
2N5251		2.0		1.0	1.0	7.0	2.0	1.5	0.5	2.0	1.5	0.5

1/ Pulsed (see 4.3.1) herein.

2. APPLICABLE DOCUMENTS

2.1 Government documents.

2.1.1 Specifications, standards, and handbooks. The following specifications, standards, and handbooks form a part of this document to the extent specified herein. Unless otherwise specified, the issues of these documents are those listed in the issue of the Department of Defense Index of Specifications and Standards (DODISS) and supplement thereto, cited in the solicitation (see 6.2).

SPECIFICATION

MILITARY

MIL-S-19500 - Semiconductor Devices, General Specification for.

STANDARDS

FEDERAL

FED-STD-H28 - Screw Thread Standards for Federal Services.

MILITARY

MIL-STD-750 - Test Methods for Semiconductor Devices.

(Unless otherwise indicated, copies of federal and military specifications, standards, and handbooks are available from the Standardization Documents Order Desk, Building 4D, 700 Robbins Avenue, Philadelphia, PA 19111-5094.)

2.2 Order of precedence. In the event of a conflict between the text of this document and the references cited herein, the text of this document takes precedence. Nothing in this document, however, supersedes applicable laws and regulations unless a specific exemption has been obtained.

3. REQUIREMENTS

3.1 Detail specification. The individual item requirements shall be in accordance with MIL-S-19500 and as specified herein.

3.2 Abbreviations, symbols, and definitions. Abbreviations, symbols, and definitions used herein shall be as specified in MIL-S-19500.

3.3 Design, construction, and physical dimensions. The design, construction, and physical dimensions shall be as specified in MIL-S-19500 and figure 1 herein.

3.3.1 Lead material. Lead material shall be solderable as defined in MIL-S-19500, MIL-STD-750 and herein. Where a choice of lead material or finish is desired, it shall be specified in the contract or purchase order (see 6.2).

3.4 Marking. Marking shall be in accordance with MIL-S-19500, except at the option of the manufacturer, the following markings may be omitted from the body of the device but shall be retained on the initial container:

a. Manufacturer's identification.

b. Country of origin.

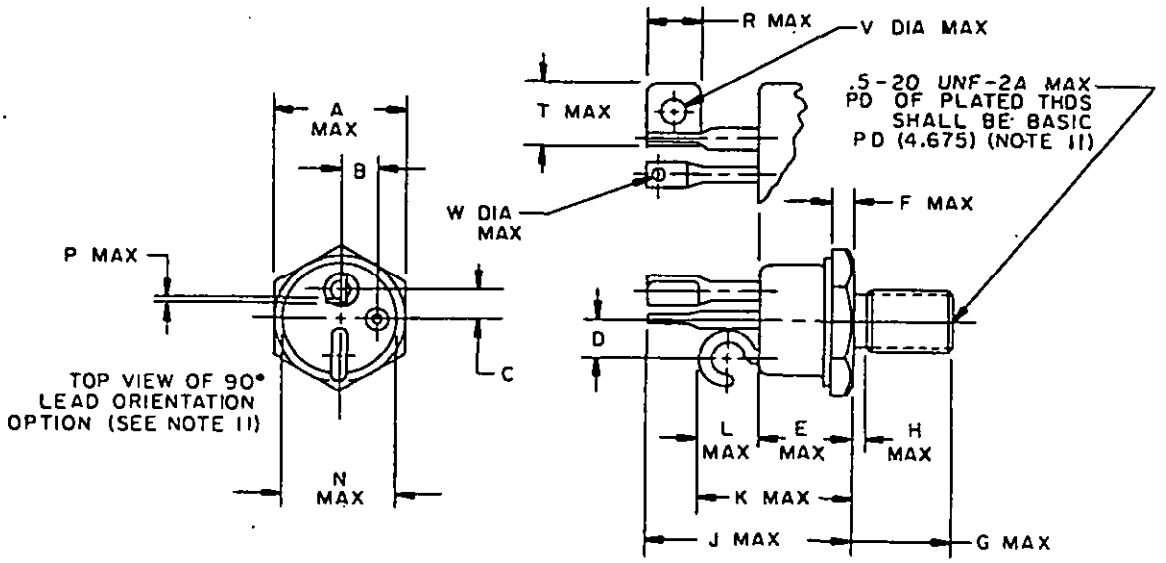

FIGURE 1. Physical dimensions (TO-114).

Dim.	A	B	C	D	E	F	G	H	J
Inch	1.062	.297 .317	.234 .254	.320 .340	.775	.185	.815	.125	1.680
mm	26.98	7.544 8.052	5.944 6.452	8.128 8.636	19.69	4.699	20.70	3.175	42.67
Notes	2	2,8	2	2				7	

Dim.	K	L	M	N	P	R	T	V	W
Inch	1.260	.485	.270	.910	.037	.450	.512	.206	.104
mm	32.00	12.32	6.858	23.11	.940	11.43	13.01	5.232	2.642
Notes									

NOTES:
1. Dimensions are in inches.
2. Metric equivalents are given for general information only.
3. Position of leads with respect to the hexagon is not controlled.
4. The case temperature may be measured anywhere on the seating plane within .125 inch of the stud.
5. The collector is in electrical contact with the case.
6. The collector terminal may be a hook or tab at the option of the manufacturer.
7. For all 3 terminals (except tab if utilized).
8. Maximum unthreaded dimension.
9. Dimension N is measured from center line of hook or outside edge of tab.
10. A 90° angle lead orientation as shown may be used at the option of the manufacturer. All dimensions of the basic outline except M, N, and the 120° lead angle apply to this option.
11. Threads in accordance with FED-STD-H28.

FIGURE 1. Physical dimensions (TO-114) - Continued.

4. QUALITY ASSURANCE PROVISIONS

4.1 Sampling and inspection. Sampling and inspection shall be in accordance with MIL-S-19500 and as specified herein.

4.2 Qualification inspection. Qualification inspection shall be in accordance with MIL-S-19500 and as specified in table IV herein.

4.3 Screening (JANS, JANTXV, and JANTX levels only). Screening shall be in accordance with MIL-S-19500 (table II) and as specified herein. The following measurements shall be made in accordance with table I herein. Devices that exceed the limits of table I herein shall not be acceptable. Thermal response will be done after screen 5 (PIND) (see 4.3.2).

Screen (see table II of MIL-S-19500)	Measurement	
	JANS level	JANTX and JANTXV levels
1/	Thermal response (see 4.3.2)	Thermal response (see 4.3.2)
9	I_{CES}, h_{FE1} test numbers 2 and 4 of table V shall be measured and the data recorded.	Not applicable
11	I_{CES}, h_{FE1} test numbers 2 and 4 of table V shall be retested and the data recorded. ΔI_{CES} = ±100 percent, or 10 µA, whichever is greater. Δh_{FE} = ±20 percent.	I_{CES}, h_{FE1} test numbers 2 and 4 of table V shall be measured and the data recorded.
12	See 4.3.1	See 4.3.1
13	I_{CES} and h_{FE3} of table I shall be retested and the data recorded. ΔI_{CES} = ±100 percent or 10 µA, whichever is greater. Δh_{FE} = ±20 percent.	I_{CES} and h_{FE3} of table I shall be retested and the data recorded. ΔI_{CES} = ±100 percent or 10 µA, whichever is greater. Δh_{FE} = ±20 percent.

1/ This test shall be performed anytime before screen 9 and after screen 5.

4.3.1 Power burn-in. Power burn-in conditions are as follows:

T_J = +187.5°C ±12.5°C
V_{CB} = 25 ±5 V dc
T_A = +30°C ±5°C

NOTE: No heat sink or forced air cooling on the devices shall be permitted.

4.3.2 Thermal response (ΔV_{BE} measurements). The ΔV_{BE} measurements shall be performed in accordance with MIL-STD-750, method 3131. The ΔV_{BE} conditions (I_H and V_H) and maximum limit shall be derived by each vendor. The chosen ΔV_{BE} measurement and conditions for each device in the qualification lot shall be submitted in the qualification report and a thermal response curve shall be plotted. The chosen ΔV_{BE} shall be considered final after the manufacturer has had the opportunity to test five consecutive lots. The following parameter measurements shall apply:

a. I_M measurement (or sense) current - - - - - - - - - - - - - 10 mA.

b. V_{CD} applied or forced voltage (approx. = V_{CE}) - - - - - - - 25 V.

c. I_E applied or forced current (approx. = $I_C \approx I_E$) - - - - - - 6 A.

d. V_H collector-emitter voltage (same as V_{CE}) - - - - - - - - - 25 V.

e. t_H heating or power time - - - - - - - - - - - - - - - - - - 100 ms.

f. t_D delay time = $t_{MD} + t_{SW}$ - - - - - - - - - - - - - - - - - 400 µs.

g. Maximum delta V_{BE} limit - - - - - - - - - - - - - - - - - - 200 mV.

Calculation of θ_{JC} requires K factor calibration as done during qualification, group E.

4.4 Quality conformance inspection. Quality conformance inspection shall be in accordance with MIL-S-19500, and as specified herein.

4.4.1 Group A inspection. Group A inspection shall be conducted in accordance with MIL-S-19500 and table I herein.

4.4.2 Group B inspection. Group B inspection shall be conducted in accordance with the conditions specified for subgroup testing in table IVa (JANS) and table IVb (JAN, JANTX, and JANTXV) of MIL-S-19500, and tables IIa and IIb herein. Electrical measurements (end points) and delta requirements shall be in accordance with the applicable steps of table V herein.

4.4.3 Group C inspection. Group C inspection shall be conducted in accordance with the conditions specified for subgroup testing in table V of MIL-S-19500 and table III herein. Electrical measurements (end points) and delta requirements shall be in accordance with the applicable steps of table V herein.

4.5 Methods of inspection. Methods of inspection and test shall be as specified in the appropriate tables and as follows:

4.5.1 Pulse measurements. Conditions for pulse measurement shall be as specified in section 4 of MIL-STD-750.

4.5.2 Thermal resistance. Thermal resistance measurements shall be conducted in accordance with MIL-STD-750, method 3131. The following details shall apply:

a. I_M measurement - - - - - - - - - - - - - - - - - - 10 mA.

b. V_{CE} measurement voltage - - - - - - - - - - - - - 25 V dc.

c. I_H collector heating current - - - - - - - - - - - 3 A.

d. V_H collector-emitter heating voltage - - - - - - 25 V dc.

e. t_H heating time - - - - - - - - - - - - - - - - - - Steady-state (see MIL-STD-750, method 3131 for definitions).

f. t_{MD} measurement delay time - - - - - - - - - - - - 400 µs.

g. t_{SW} sample window time - - - - - - - - - - - - - - 10 µs maximum.

5. PACKAGING

5.1 Packaging requirements. The requirements for packaging shall be in accordance with MIL-S-19500.

TABLE I. Group A inspection.

Inspection 1/	MIL-STD-750		Symbol	Limits		Unit
	Method	Conditions		Min	Max	
Subgroup 1						
Visual and mechanical examination	2071					
Subgroup 2						
Collector to emitter cutoff current	3041	Bias condition C	I_{CES}			
2N4865		V_{CE} = 80 V dc, V_{BE} = 0			100	µA dc
2N5250		V_{CE} = 100 V dc, V_{BE} = 0			100	µA dc
2N5251		V_{CE} = 150 V dc, V_{BE} = 0			100	µA dc
Forward-current transfer ratio	3076	Pulsed (see 4.5.1) V_{CE} = 5 V dc, I_C = 90 A dc	h_{FE1}	5		
Emitter to base cutoff current	3061	Bias condition D, V_{BE} = 8 V dc, I_C = 0	I_{EBO}		5	µA dc
Collector to base breakdown voltage	3001	Bias condition D, I_C = 100 µA dc, I_B = 0, Pulsed (see 4.5.1)	$V_{BR(CBO)}$			
2N4865				100		V dc
2N5250				125		V dc
2N5251				180		V dc
Collector to emitter breakdown voltage	3011	Bias condition D, I_C = 200 mA dc, I_B = 0, Pulsed (see 4.5.1)	$V_{BR(CEO)}$			
2N4865				80		V dc
2N5250				100		V dc
2N5251				150		V dc
Emitter to base breakdown voltage	3026	Bias condition D, I_E = .1 mA dc	V_{EBO}		10	V dc

See footnote at end of table.

TABLE I. Group A inspection - Continued.

Inspection 1/	MIL-STD-750		Symbol	Limits		Unit
	Method	Conditions		Min	Max	
Subgroup 2 - Continued						
Forward-current transfer ratio	3076	Pulsed (see 4.5.1), V_{CE} = 5 V dc, I_C = 20 A dc	h_{FE2}	30	90	
Forward-current transfer ratio	3076	Pulsed (see 4.5.1), V_{CE} = 5 V dc, I_C = 40 A dc	h_{FE3}	15	50	
Forward-current transfer ratio	3076	Pulsed (see 4.5.1), V_{CE} = 5 V dc, I_C = 70 A dc	h_{FE4}	10	40	
Base to emitter voltage (saturated)	3066	Test condition A, pulsed (see 4.5.1), I_B = 4 A, I_C = 40 A dc	V_{BE}(sat)1		1.8	V dc
Base to emitter voltage (saturated)	3066	Test condition A, pulsed (see 4.5.1), I_B = 10 A, I_C = 70 A dc	V_{BE}(sat)2		2.5	V dc
Collector to emitter voltage (saturated)	3071	Pulsed (see 4.5.1), I_B = 4 A, I_C = 40 A dc	V_{CE}(sat)1		1.0	V dc
Collector to emitter voltage (saturated)	3071	Pulsed (see 4.5.1), I_B = 10 A, I_C = 70 A dc	V_{CE}(sat)2		2.0	V dc
Subgroup 3						
High temperature operation:						
Collector to emitter cutoff current	3041	Bias condition C, T_A = +150°C V_{CE} = 100 V dc, V_{BE} = 0	I_{CES}		500	µA dc
Low temperature operation:						
Forward-current transfer ratio	3076	T_A = -55°C, pulsed (see 4.5.1), V_{CE} = 5 V dc, I_C = 40 A dc	h_{FE5}	10		
Forward-current transfer ratio	3076	T_A = -55°C, pulsed (see 4.5.1), V_{CE} = 5 V dc, I_C = 70 A dc	h_{FE6}	8		

See footnote at end of table.

TABLE I. Group A inspection - Continued.

Inspection 1/	MIL-STD-750		Symbol	Limits		Unit
	Method	Conditions		Min	Max	
Subgroup 4						
Magnitude of common-emitter small-signal short circuit forward-current transfer ratio	3306	V_{CE} = 10 V dc, f = 10 MHz I_C = 5.0 A dc	$\|h_{fe}\|$	1	7	
Turn-on time	3251	Test condition A, I_C = 70 A dc, $I_B(1)$ = 10 A dc, $I_B(2)$= -10 A dc, see figure 2	t_{on}		1.0	µs
Storage time		I_C = 70 A dc, $I_B(1)$ = 10 A dc, $I_B(2)$ = -10 A dc, see figure 2	t_s		0.7	µs
Fall time		I_C = 70 A dc, $I_B(1)$ = 10 A dc, $I_B(2)$ = -10 A dc, see figure 2	t_f		600	ns
Subgroup 5						
Safe operating area (continuous dc)	3005 (3051)	T_C = 100°C Pre-pulsed condition, see figures 2 and 3, V_{CE} = 0, I_C = 0, Pulse condition (see 4.5.1) t = 60 seconds, $t_r \leq$ 6 seconds $t_f \leq$ 6 seconds, 1 cycle				
Test 1 (all types)		V_{CE} = 4.0 V dc, I_C = 50 A dc, P_T = 200 W				
Test 2 - 2N5250 (only)		V_{CE} = 26 V dc, I_C = 7.8 A dc, P_T = 200 W				
Test 2 - 2N5251 (only)		V_{CE} = 37 V dc, I_C = 5.4 A dc, P_T = 200 W				

See footnote at end of table.

TABLE I. Group A inspection - Continued.

Inspection 1/	MIL-STD-750		Symbol	Limits		Unit
	Method	Conditions		Min	Max	
Subgroup 5 - Continued						
Unclamped inductive sweep		T_C = 25°C, I_B = 500 mA dc, I_C = 5 A dc, L = 5 mH, R_B = .1 ohm, see figure 4				
Clamped inductive sweep		T_C = 25°C, I_B = 3 A dc, I_C = 30 A dc, L = 5 mH, R_B = .1 ohm, V_{CE}(clamp) = 150 V, see figure 5				
End points		See table V, steps 1, 2, and 3				
Subgroups 6 and 7						
Not applicable						

1/ For sampling plan, see MIL-S-19500.

TABLE IIa. Group B inspection for JANS devices.

Inspection 1/	MIL-STD-750	
	Method	Conditions
Subgroup 1		
Physical dimensions	2066	See figure 1
Subgroup 2		
Solderability	2026	
Resistance to solvents	1022	
Subgroup 3		
Temperature cycling (air-to-air)	1051	
Hermetic seal	1071	
Fine leak		Test condition G or H, maximum leak rate = 5×10^{-8} atm cm^3/s, except 5×10^{-7} atm cm^3/s for devices with internal cavity > 0.3 cm^3.
Gross leak		Test condition A, C, D, E, J, or K.
Electrical measurements		See table V, steps 1, 2, and 3.
Decap-internal visual (design verification)	2075	
Bond strength	2037	
Die shear	2017	
Subgroup 4		
Intermittent operation life	1037	t_{on} = 3 minutes minimum, t_{off} = 3 minutes minimum, 2,000 cycles, (see 4.3.1).
Electrical measurements		See table V, steps 1, 2, and 3.

See footnote at end of table.

TABLE IIa. Group B inspection for JANS devices - Continued.

Inspection 1/	MIL-STD-750	
	Method	Conditions
Subgroup 5		
Accelerated steady-state operation life	1027	T_J = 275°C (minimum) for 96 hours minimum. Bias conditions as specified.
Electrical measurements		See table V, steps 4 and 5
Bond strength (Al-Au die interconnects only)	2037	
Subgroup 6		
Thermal resistance	3131	See 4.5.2.

1/ For sampling plan, see MIL-S-19500.

TABLE IIb. Group B inspection for JANTX and JANTXV.

Inspection 1/	MIL-STD-750	
	Method	Conditions
Subgroup 1		
Solderability	2026	
Resistance to solvents	1022	
Subgroup 2		
Temperature cycling (air-to-air)	1051	
Hermetic seal	1071	
Fine leak		Test condition G or H, maximum leak rate = 5 x 10^{-8} atm cm^3/s, for devices with internal cavity > 0.3 cm^3.
Gross leak		Test condition A, C, D, E, J, or K.
Electrical measurements		See table V, steps 1, 2, and 3.
Subgroup 3		
Intermittent operation life	1037	t_{on} = 3 minutes minimum, t_{off} = 3 minutes minimum, 2,000 cycles, see 4.3.1.
Electrical measurements		See table V, steps 1, 2, and 3.
Subgroup 4		
Bond strength	2037	
Decap internal visual (design verification)	2075	Visual criteria in accordance with qualified design.
Subgroup 5		
Not applicable		
Subgroup 6		
High temperature (nonoperating)	1032	340 +72, -24 hours.
Electrical measurements		See table V, steps 1, 2, and 3.

1/ For sampling plan, see MIL-S-19500.

TABLE III. Group C inspection.

Inspection 1/	MIL-STD-750	
	Method	Conditions
Subgroup 1		
Physical dimensions	2066	See figure 1.
Subgroup 2		
Thermal shock (glass strain)	1056	Test condition A, except test condition B for devices with power rating of >5 watts at T_c = 25°C.
Terminal strength	2036	As specified.
Hermetic seal	1071	
Fine leak		Test condition G or H, maximum leak rate = 5 x 10^{-8} atm cm^3/s, except 5 x 10^{-7}atm cm^3/s, for devices with internal cavity > 0.3 cm^3.
Gross leak		Test condition A, C, D, E, J, or K.
Moisture resistance	1021	
Electrical measurements		See table V, steps 1, 2, and 3.
Subgroup 3		
Shock	2016	
Vibration, variable frequency	2056	
Constant acceleration	2006	One minute minimum in each orientation, X1, Y1, and Z1 at 20,000 G's minimum, except at 10,000 G's minimum for devices with power rating of ≥ 10 watts at T_c = 25°C.
Electrical measurements		See table V, steps 4 and 5
Subgroup 4		
Salt atmosphere (corrosion)	1041	

See footnote at end of table.

TABLE III. Group C inspection - Continued.

Inspection 1/	MIL-STD-750	
	Method	Conditions
Subgroup 5		
Not applicable		
Subgroup 6		
Intermittent operation life	1037	See 4.3.1. t_{on} = 3 minutes minimum, t_{off} = 3 minutes minimum, 4,000 cycles
Electrical measurements		See table V, steps 1, 2, 3, and 4

1/ For sampling plan, see MIL-S-19500.

TABLE IV. Group E inspection (all quality levels) for qualification only.

Inspection	MIL-STD-750		Qualification conformance inspection
	Method	Conditions	
Subgroup 1			22 devices, c = 1
Thermal shock	1056	0°C to 100°C, 100 cycles	
Hermetic seal	1071		
Electrical measurements		See table V, steps 1, 2, and 3	
Subgroup 2			45 devices, c = 1
Steady-state dc blocking life	1038 or 1049	Condition A; 1,000 hours	
Electrical measurements		See table V, steps 1 and 4	
Subgroup 3			3 devices, c = 1
Destructive physical analysis	2102		
Subgroup 4			22 devices, c = 1
Thermal resistance	3131	$R_{\theta JC}$ = 0.5°C/W maximum	
Subgroup 5			
Not applicable			

TABLE V. Groups A, B, and C electrical end-point inspection measurements.

Step	Inspection	MIL-STD-750		Symbol	Limits		Unit
		Method	Conditions		Min	Max	
1	Emitter to base cutoff current	3061	Bias condition D V_{EB} = 8 V dc, I_C = 0	I_{EBO}		5	µA dc
2	Collector to emitter cutoff current	3041	Bias condition C, V_{BE} = 0	I_{CES}			
	2N4865		V_{CE} = 80 V dc			100	µA dc
	2N5250		V_{CE} = 100 V dc			100	µA dc
	2N5251		V_{CE} = 150 V dc			100	µA dc
3	Forward current transfer ratio	3076	Pulsed (see 4.5.1) V_{CE} = 5 V dc, I_C = 40 A dc	h_{FE3}	15	50	
4	Forward current transfer ratio	3076	Pulsed (see 4.5.1) V_{CE} = 5 V dc, I_C = 90 A dc	h_{FE1}	5		
5	Turn-on time	3251	Test condition A, I_C = 40 A dc $I_B(1)$ = 4 A dc, $I_B(2)$ = -4 A dc, see figure 2	t_{ON}		1.0	µs
	Storage time		I_C = 40 A dc $I_B(1)$ = 4 A dc, $I_B(2)$ = -4 A dc, see figure 2	t_s		0.7	µs
	Fall time		I_C = 40 A dc $I_B(1)$ = 4 A dc, $I_B(2)$ = -4 A dc, see figure 2	t_f		600	ns

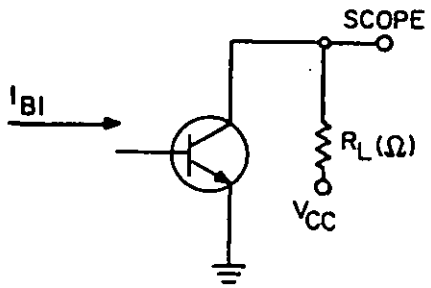

Circuit conditions at I_C = 70 A dc

$10 \leq V_{CC} \leq 25$ V dc

R_L (noninductive) = $\frac{V_{CC} - V_{CE}(sat)}{70}$

where: $V_{CE}(sat)$ = value at
I_C = 70 A, I_B = 10 A
$I_{B1} = -I_{B2}$ = 10 A

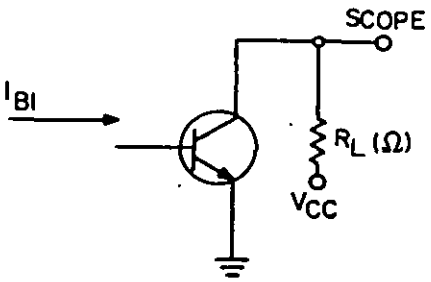

Circuit conditions at I_C = 40 A dc

$10 \leq V_{CC} \leq 25$ V dc

R_L (noninductive) = $\frac{V_{CC} - V_{CE}(sat)}{40}$

where: $V_{CE}(sat)$ = value at
I_C = 40 A, I_B = 4 A
$I_{B1} = -I_{B2}$ = 4 A

FIGURE 2. Pulse response test circuits.

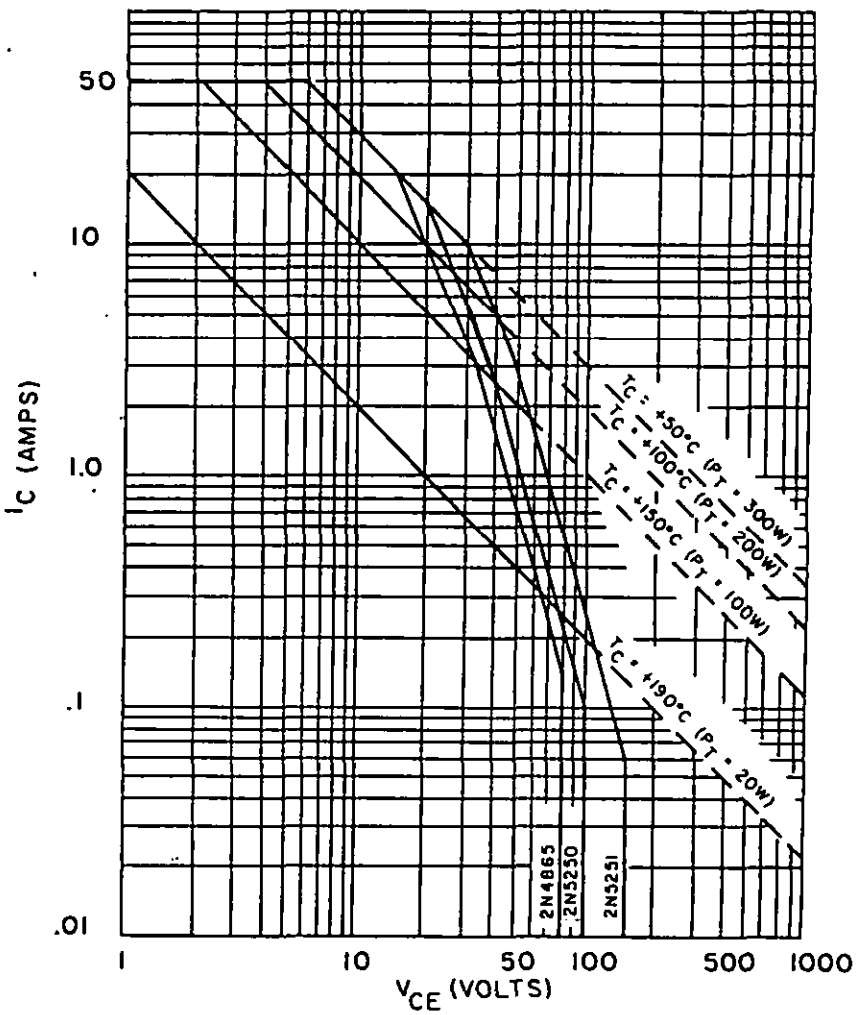

FIGURE 3. Rated safe operating area.

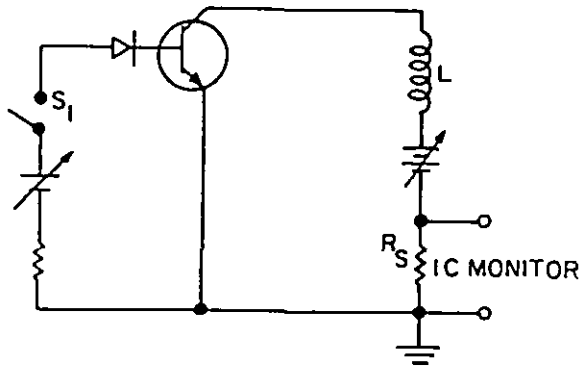

Testing procedure:

1. With switch S_1 closed, apply specified I_B and I_C (at specified T_C conditions).
2. As soon as 1 above is affected and ascertained, open switch S_1. Device fails if, now, second *breakdown occurs.*
3. Perform specified end-point tests.

L = 5 mH, (see figure 5 data)
R_S = 0.1Ω (noninductive, 1.0 percent tolerance, maximum)

FIGURE 4. Unclamped inductive sweep test circuit diagram.

L = 5 mH; Chicago St'd Transf. Corp. Type C = 2689 FIlter Choke, .03Ω, 22.5 A; (or equiv.)

R_S = 0.1Ω, (noninductive, 1.0 percent tolerance, maximum)

Testing procedure:

Same as specified on figure 4 above, except use the following respective

Clamp voltages:

2N4865 = 80 V, +0, -5
2N5250 = 100 V, +0, -5
2N5251 = 150 V, +0, -5

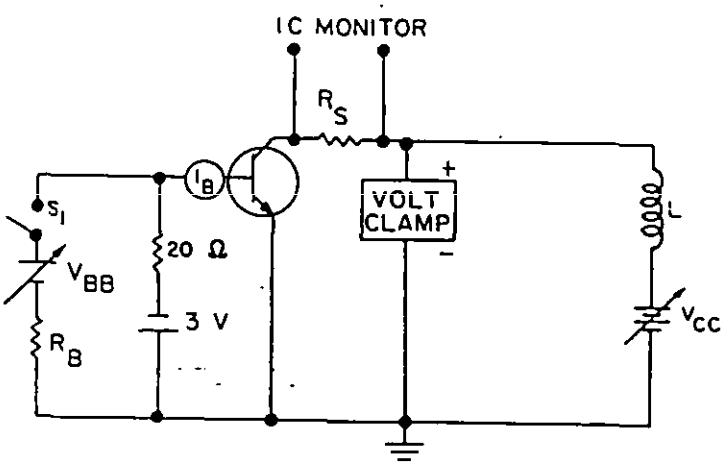

Special note: Device fails if clamp voltage is not reached.

FIGURE 5. Clamped inductive sweep test circuit diagram.

6. NOTES

(This section contains information of a general or explanatory nature that may be helpful, but is not mandatory.)

6.1 Notes. The notes specified in MIL-S-19500 are applicable to this specification.

6.2 Ordering data. Acquisition documents must specify the following:

a. Title, number, and date of the specification.

b. Issue of DODISS to be cited in the solicitation, and if required, the specific issue of individual documents referenced (see 2.1.1).

c. Lead material and finish (see 3.3.1).

6.3 Substitution information. Devices covered by this specification are substitutable for the manufacturer's and user's part number. This information in no way implies that manufacturer's part numbers are suitable as a substitute for the military Part or Identifying Number (PIN).

6.4 JAN substitution. JANTX devices are a direct substitute for JAN devices.

6.5 Changes from previous issue. Asterisks are not used in this revision to identify changes with respect to the previous issue due to the extensiveness of the changes.

CONCLUDING MATERIAL

Custodians:
Army - ER
Navy - EC
Air Force - 17
NASA - NA

Review activity:
Air Force - 85

Preparing activity:
Army - ER

Agent:
DLA - ES

(Project 5961-1222)

STANDARDIZATION DOCUMENT IMPROVEMENT PROPOSAL

INSTRUCTIONS

1. The preparing activity must complete blocks 1, 2, 3, and 8 In block 1, both the document number and revision letter should be given.
2. The submitter of this form must complete blocks 4, 5, 6, and 7.
3. The preparing activity must provide a reply within 30 days from receipt of the form.

NOTE: This form may not be used to request copies of documents, nor to request waivers, or clarification of requirements on current contracts. Comments submitted on this form do not constitute or imply authorization to waive any portion of the referenced document(s) or to amend contractual requirements.

I RECOMMEND A CHANGE:

1. DOCUMENT NUMBER: MIL-S-19500/380B

2. DOCUMENT DATE (YYMMDD): 91 06 04

3. DOCUMENT TITLE: Semiconductor Device, Transitor, NPN, Silicon, Power Types 2N4865, 2N5250 JANTX, JANTXV, and JANS

4. NATURE OF CHANGE (Identify paragraph number and include proposed rewrite, if possible. Attach extra sheets as needed.)

5. REASON FOR RECOMMENDATION

6. SUBMITTER

a. NAME (Last, First, Middle Initial)

b. ORGANIZATION

c. ADDRESS (Include Zip Code)

d. TELEPHONE (Include Area Code)
(1) Commercial
(2) AUTOVON (If applicable)

7. DATE SUBMITTED (YYMMDD)

8. PREPARING ACTIVITY

a. NAME
Commander
LABCOM

b. TELEPHONE (Include Area Code)
(1) Commercial: (908) 544-3441
(2) AUTOVON: 995-3441

c. ADDRESS (Include Zip Code)
ATTN: SLCET-RS
Ft. Monmouth, NJ 07703-5601

IF YOU DO NOT RECEIVE A REPLY WITHIN 45 DAYS, CONTACT:
Defense Quality and Standardization Office
5203 Leesburg Pike, Suite 1403, Falls Church, VA 22041-3466
Telephone (703) 756-2340 AUTOVON 289-2340