MILITARY SPECIFICATION

SEMICONDUCTOR DEVICE, TRANSISTOR, PNP, GERMANIUM, SWITCHING TYPES 2N425, 2N426, 2N427

1. SCOPE

1.1 Scope.- This specification covers the detail requirements for germanium, PNP, transistors for use in low-power, switching applications in compatible equipment circuits. (See 3.4 and 6.2 herein.)

1.2 Outline and dimensions.- See Fig. 1 herein. (TO-5)

1.3 Maximum ratings.- (At T_A = +25°C, unless otherwise specified):

	P_T 1/	V_{CBO}	V_{CEO}	V_{EBO}	I_C	I_{CBO}	I_{CES}	I_{EBO}	T_{stg}
	mW	Vdc	Vdc	Vdc	Adc	uAdc	uAdc	uAdc	°C
2N425	150	-30	-20	-20	400	-3	-25	-3	-65 to +100
2N426	150	-30	-18	-20	400	-3	-25	-3	-65 to +100
2N427	150	-30	-15	-20	400	-3	-25	-3	-65 to +100

1/ For derating data pertinent to T_A > +25°C, see Fig. 2 herein.

1.4 Particular electrical characteristics.- (At T_A = +25°C, unless otherwise specified):

	h_{FE} at: I_C=-1mAdc V_{CE}=-0.25Vdc		V_{BE} at: I_B=-1mAdc V_{CE}=-0.25Vdc		$V_{CE}(sat)$ at: I_B=-10mAdc I_C= 1/		C_{obo} at: f= 2/ V_{CB}=-5Vdc I_E= 0		f_{hfb} at: I_E=-1mAdc V_{CB}=-5Vdc		Switching t_{on} / t_{off} See Table I herein	
	Min	Max	Min	Max	Min	Max	Min	Max	Min	Max	Max	Max
	---	---	Vdc	Vdc	Vdc	Vdc	pf	pf	MHz	MHz	usec	usec
2N425	20	40	---	-0.45	---	-0.25	---	20	2.5	---	1.05	1.25
2N426	30	60	---	-0.45	---	-0.25	---	20	3.0	---	1.05	1.15
2N427	45	90	---	-0.45	---	-0.25	---	20	5.0	---	0.85	1.15

1/ At I_C = -100 mAdc for 2N425, 2N426; at I_C = -150 mAdc for 2N427.

2/ At f ≥ 0.1 ≤ 1.0 MHz.

FSC-5961

2. APPLICABLE DOCUMENTS

2.1 The following documents, of the issue in effect on date of invitation for bids or request for proposal, form a part of this specification to the extent specified herein:

SPECIFICATIONS

MILITARY

MIL-S-19500 Semiconductor Devices, General Specification For

STANDARDS

MILITARY

MIL-STD-202 Test Methods For Electronic and Electrical Component Parts

MIL-STD-750 Test Methods For Semiconductor Devices

(Copies of specifications, standards, drawings, and publications required by contractors in connection with specific procurement functions should be obtained from the procuring agency or as directed by the contracting officer. Both the title and number or symbol should be stipulated when requesting copies.)

3. REQUIREMENTS

3.1 Requirements.- Requirements for the transistors shall be in accordance with Specification MIL-S-19500 and as otherwise specified herein.

3.2 Abbreviations and symbols.- The abbreviations and symbols used herein are defined in Specification MIL-S-19500, and as follows:

t_{off} . . . . . $(t_s + t_f)$

3.3 Design and construction.- The transistor shall be of the design, construction, and physical dimensions specified on Figure 1.

3.3.1 Terminal arrangement.- The terminal arrangement on the transistor shall be as indicated in Figure 1.

3.3.2 Terminal-lead length.- Terminal-lead length(s) other than that specified in Figure 1 may be furnished under contract or order (see 6.3 herein) where the devices covered herein are required directly for particular equipment-circuit installlation. Where such other lead-lengths are required and provided, it shall not be construed as affecting adversely the Qualified-product status of the device, or applicable JAN marking.

3.3.3 Operating position.- The transistor shall be capable of proper operation in any position.

3.4 Performance characteristics.- The transistor performance characteristics shall be as specified in Tables I, II, and III herein. Except where specifically differentiated for respective transistor types (see 1.3, 1.4, and Tables I, II, and III herein), the performance requirements including characteristics, ratings, and test conditions, apply equally to all transistor types covered herein.

3.5 Marking.- Except as otherwise specified herein, marking shall be in accordance with Specification MIL-S-19500. If any specification-requirments waiver has been granted, the product-identification marking shall consist of the "classification" type designation only. The "manufacturer's identification" and "country of origin" may, at option of the manufacturer, be omitted from being marked directly on the semiconductor device covered herein.

4. QUALITY ASSURANCE PROVISIONS

4.1 General.- Except as otherwise specified herein, the responsibility for inspection, general procedures for acceptance, classification of inspection, and inspection conditions and methods of test shall be in accordance with Specification MIL-S-19500, Quality Assurance Provisions.

4.2 Qualification and acceptance inspection.- Qualification and Quality Conformance inspection shall be in accordance with Specification MIL-S-19500, Quality Assurance Provisions, and as otherwise specified herein (see 4.2.2 herein). Groups A, B, and C inspection shall consist of the examinations and tests specified in Tables I, II, and III, respectively, herein. Quality Conformance inspection shall include inspection of Preparation for Delivery (see 5.1 herein).

4.2.1 Specified LTPD for subgroups.- The LTPD specified for a subgroup in Tables I, II, and III herein shall apply for all of the tests, combined, in the subgroup.

4.2.2 Group B-Group C life test samples.- Samples that have been subjected to Group B, 340-hour life test may be continued on test for 1000 hours in order to satisfy Group C life test requirements. These samples shall be predesignated, and shall remain subjected to the Group C 1000 hour evaluation after they have passed the Group B, 340-hour acceptance criteria; hereto, the cumulative total of failures found during 340-hour test and during the subsequent interval up to 1000 hours on these samples shall be computed for 1000-hour acceptance criteria.

4.2.3 Group C testing.- Unless otherwise specified, Group C tests shall be performed on the initial lot and thereafter on a lot every 6 months. (See Table III herein.) The contractor shall, throughout the

course of a contract or order, permit the Government representative to scrutinize all test data and findings covering manufacturer's test program on Group C characteristics and parameters for the product concerned. Upon determination by the Government inspector (in advance of Group C, 6-month, test results) that Group C parameters are not being adequately met, the Governement inspector may require lot-by-lot inspection, normally for a minimum of 3 consective lots, to be performed for required Group C tests.

4.2.4 Disposition of sample units.- Sample units that have been subjected to Group B, Subgroup 2, 4, and 5 tests shall not be delivered on contract or order. Sample units that have been subjected to and have passed Group B, Subgroups 1, 3, 6, and 7 tests and to Group C, Subgroups 1 and 2 tests, (these tests to be considered non-destructive), may be delivered on the contract or order provided that, after Group B and C inspection is terminated, those sample units are subjected to and pass Group A inspection. Defective units from any sample group that may have passed group inspection shall not be delivered on the contract or order until the defect(s) has been remedied to the satisfaction of the Government.

4.3 Particular examination and test requirements.-

4.3.1 Interval for End-Point test measurements.- All applicable End-Point Test measurements shall be performed, after sample units have been subjected to required physical-mechanical or environmental test(s), in accordance with the following time-delay limitations:

(a) For Qualification inspection: within 24 hours.

(b) For Quality Conformance inspection: within 96 hours.

4.3.2 Mechanical damage resulting from tests.- Except for intentionally deforming, mutilating, or dismembering mechanical-stress tests to which samples are subjected, there shall be no evidence of mechanical damage to any sample unit as a result of any of the Group A, B, or C tests.

Table I. Group A inspection.

Test Method Per MIL-STD-750	Examination or test 1/	Conditions	LTPD	Symbol	Limits Min	Limits Max	Unit
	Subgroup 1		10				
2071	Visual and mechanical examination	---		---	---	---	---
	Subgroup 2		7				
3036	Collector-base cutoff current	Bias Cond. D V_{CB}=-1.5 Vdc		I_{CBO}	---	-3	uAdc
3041	Collector-emitter cutoff current:	Bias Cond. C					
	2N425	V_{CE}=-20 Vdc		I_{CES}	---	-25	uAdc
	2N426	V_{CE}=-18 Vdc		I_{CES}	---	-25	uAdc
	2N427	V_{CE}=-15 Vdc		I_{CES}	---	-25	uAdc
3061	Emitter-base cutoff current	Bias Cond. D V_{EB}=-1.5 Vdc		I_{EBO}	---	-3	uAdc
3066	Base-emitter voltage	Test Cond. B I_B=-1.0 mAdc V_{CE}=-0.25 Vdc		V_{BE}	---	-0.45	Vdc
3066	Base-emitter voltage	Test Cond. B I_B=-10 mAdc V_{CE}=-0.35 Vdc		V_{BE}	---	-0.8	Vdc
3001	Collector-base breakdown voltage	Bias Cond. D I_C=-25 uAdc		BV_{CBO}	-30	---	Vdc
3011	Collector-emitter breakdown voltage:	Bias Cond. D I_C=-1.0 mAdc					
	2N425			BV_{CEO}	-20	---	Vdc
	2N426			BV_{CEO}	-18	---	Vdc
	2N427			BV_{CEO}	-15	---	Vdc
3026	Emitter-base breakdown voltage	Bias Cond. D I_E=-25 uAdc		BV_{EBO}	-20	---	Vdc

Table I. Group A inspection.-(Cont'd)

Test Method per MIL-STD-750	Examination or test 1/	Conditions	LTPD	Symbol	Limits Min.	Limits Max.	Unit
	Subgroup 2-(Cont'd)						
3071	Collector-emitter saturation voltage:	I_B=-10mAdc					
	2N425	I_C=-100mAdc		V_{CE}(sat)	---	-0.25	Vdc
	2N426	I_C=-100mAdc		V_{CE}(sat)	---	-0.25	Vdc
	2N427	I_C=-150mAdc		V_{CE}(sat)	---	-0.25	Vdc
	Subgroup 3		7				
3076	Forward-current transfer ratio:	I_C=-1.0mAdc V_{CE}=-0.25Vdc					
	2N425			h_{FE}	20	40	---
	2N426			h_{FE}	30	60	---
	2N427			h_{FE}	45	90	---
3076	Forward-current transfer ratio:	I_C=-10mAdc V_{CE}=-0.35Vdc					
	2N425			h_{FE}	10	---	---
	2N426			h_{FE}	15	---	---
	2N427			h_{FE}	20	---	---
	Subgroup 4		15				
3301	Small-signal short circuit forward-current transfer-ratio cutoff frequency:	V_{CB}=-5Vdc I_E=-1mAdc					
	2N425			f_{hfb}	2.5	---	MHz
	2N426			f_{hfb}	3.0	---	MHz
	2N427			f_{hfb}	5.0	---	MHz
3236	Output capacitance (open circuit)	V_{CB}=-5Vdc I_E=0 f=0.1±1.0MHz		C_{obo}	---	20	pf
3266	Base spreading resistance:	See Fig. 3 herein					
	2N425			r_b	---	120	ohms
	2N426			r_b	---	130	ohms
	2N427			r_b	---	140	ohms

Table I. Group A inspection - (Cont'd).

Test Method Per MIL-STD-750	Examination or test 1/	Conditions	LTPD	Symbol	Limits Min	Limits Max	Unit
	Subgroup 5		15				
3251	Pulse response:	Test Cond. A except test circuits and pulse req'ts per Fig. 4 herein:					
	Turn-on time:						
	2N425	R_B=2 Kohms		t_{on}	---	1.05	usec
	2N426	R_B=3 Kohms		t_{on}	---	1.05	usec
	2N427	R_B=4 Kohms		t_{on}	---	0.85	usec
	Turn-off time:						
	2N425	R_B=2 Kohms		t_{off}	---	1.25	usec
	2N426	R_B=3 Kohms		t_{off}	---	1.15	usec
	2N427	R_B=4 Kohms		t_{off}	---	1.15	usec
	Subgroup 6 2/		15				
3/	High-temperature operation:	T_A=+700$^{+3^\circ}_{-0^\circ}$ C					
3036	Collector-base cutoff current	Bias Cond. D V_{CB}=-1.5 Vdc		I_{CBO}	---	-70	uAdc
3076	Forward-current transfer ratio:	I_C=-1.0 mAdc V_{CE}=-0.25 Vdc					
	2N425			h_{FE}	15	48	---
	2N426			h_{FE}	24	72	---
	2N427			h_{FE}	34	108	---
3/	Low-temperature operation:	T_A=-55$^{\circ}_{+0^\circ}$ C					
3076	Forward-current transfer ratio:	I_C=-1.0 mAdc V_{CE}=-0.25 Vdc					
	2N425			h_{FE}	15	42	---
	2N426			h_{FE}	20	62	---
	2N427			h_{FE}	27	100	---

1/ See 3.4 herein.

2/ For this Subgroup, the sample units subjected to the High-Temperature Operation test shall be permitted to return to and be stabilized at room ambient temperature prior to their being subjected to the Low-Temperature Operation test.

3/ Measurement(s) shall be made after thermal equilibrium has been reached at the temperature specified.

Table II. Group B inspection.

Test Method per MIL-STD-750	Examination or test 1/	Conditions	LTPD	Symbol	Limits Min	Limits Max	Unit
	Subgroup 1		20				
2066	Physical dimensions	---		---	---	---	---
	Subgroup 2		15				
2026	Solderability	Omit aging		---	---	---	---
1051	Temperature cycling	Test Cond. B except T(high)= +100°C		---	---	---	---
1056	Thermal shock (glass strain)	Test Cond. A		---	---	---	---
2/	Seal (leak rate)	Test Cond. C, procedure III; Test Cond. A or B for gross leaks		---	---	10^{-7}	atm/cc/sec
1021	Moisture resistance	---		---	---	---	---
	End-Point tests:						
3036	Collector-base cutoff current:	Bias Cond. C					
	2N425	V_{CE}=-20Vdc		I_{CES}	---	-25	Adc
	2N426	V_{CE}=-18Vdc		I_{CES}	---	-25	uAdc
	2N427	V_{CE}=-15Vdc		I_{CES}	---	-25	uAdc
3076	Forward-current transfer ratio:	I_C=-1.0mAdc V_{CE}=-0.25Vdc					
	2N425			h_{FE}	20	40	---
	2N426			h_{FE}	30	60	---
	2N427			h_{FE}	45	90	---
	Subgroup 3		15				
2016	Shock	Non-operating 1500G 5 blows of 0.5 msec ea. in orientations X1, Y1, Y2, Z1 (total = 20 blows)		---	---	---	---

Table II. Group B inspection.- (Cont'd).

Test Method per MIL-STD-750	Examination or test 1/	Conditions	LTPD	Symbol	Limits Min	Limits Max	Unit
	Subgroup 3-(Cont'd)						
2046	Vibration fatigue	Non-operating		---	---	---	---
2056	Vibration, variable frequency	10G		---	---	---	---
2006	Constant acceleration	20,000G; Orient. X1, Y1, Y2, Z1		---	---	---	---
	End-Point tests:						
	Same as for subgroup 2, above						
	Subgroup 4		20				
2036	Terminal strength (lead fatigue)	Test Cond. E		---	---	---	---
	Subgroup 5		20				
1041	Salt atmosphere (corrosion)	---		---	---	---	---
	End-Point tests: Same as for Subgroup 2, above						
	Subgroup 6		5				
1031	High-temperature life (non-operating)	T_{stg}=+100°C $t \geq$ 340 hrs 3/		---	---	---	---
	End-Point tests:						
3036	Collector-base cutoff current:	Bias Cond. C					
	2N425	V_{CE}=-20Vdc		I_{CES}	---	-50	uAdc
	2N426	V_{CE}=-18Vdc		I_{CES}	---	-50	uAdc
	2N427	V_{CE}=-15Vdc		I_{CES}	---	-50	uAdc
3076	Forward-current transfer ratio:	I_C=-1.0mAdc V_{CE}=-0.25Vdc					
	2N425			h_{FE}	16	48	---
	2N426			h_{FE}	24	72	---
	2N427			h_{FE}	34	108	---

Table II. Group B inspection - (Cont'd).

Test Method per MIL-STD-750	Examination or test 1/	Conditions	LTPD	Symbol	Limits Min	Limits Max	Unit
	Subgroup 7		5				
1026	Steady state operation life	T_A=+25°C V_{CB}=-15Vdc I_C=-10mAdc t = 340 hrs 3/		---	---	---	---
	End-Point tests: Same as for Subgroup 6, above						

1/ See 3.4 and 4.3.1 herein.

2/ Per Method 112 in Standard MIL-STD-202.

3/ See 4.2.2 herein.

Table III. Group C inspection. 1/

Test Method per MIL-STD-750	Examination or test 2/	Conditions	LTPD	Symbol	Limits Min	Limits Max	Unit
	Subgroup 1		λ=7				
1031	High-temperature life (non-operating)	T_{stg}=+100°C t=1000 hrs 3/		---	---	---	---
	End-Point tests:						
3036	Collector-base cutoff current:	Bias Cond. C					
	2N425	V_{CE}=-20Vdc		I_{CES}	---	-50	uAdc
	2N426	V_{CE}=-18Vdc		I_{CES}	---	-50	uAdc
	2N427	V_{CE}=-15Vdc		I_{CES}	---	-50	uAdc
3076	Forward-current transfer ratio:	I_C=-1.0mAdc V_{CE}=-0.25Vdc					
	2N425			h_{FE}	16	48	---
	2N426			h_{FE}	24	72	---
	2N427			h_{FE}	34	108	---
	Subgroup 2		λ=7				
1026	Steady state operation life:	T_A=+25°C V_{CB}=-15Vdc I_C=-10mAdc t = 1000 hrs 3/		---	---	---	---
	End-Point tests: Same as for Subgroup 1 above						

1/ Periodicity: See 4.2.3 herein.

2/ See 3.4 and 4.3.1 herein.

3/ See 4.2.2 herein.

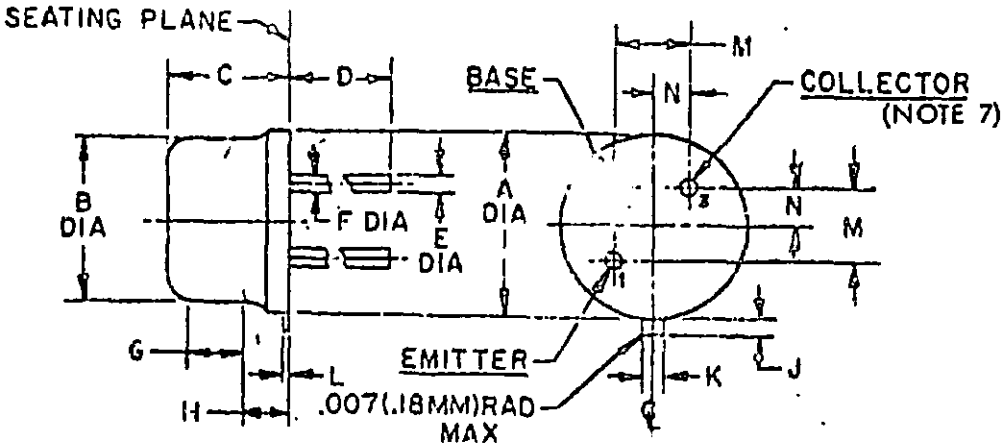

DIMENSIONS					
LTR	INCHES		MILLIM		
	MIN	MAX	MIN	[illegible]	
A	.335	.370	8.51	9.4[illegible]	
B	.305	.335	7.75	8.51	
C	.240	.260	6.10	6.60	
D	1.375	1.625	34.92	41.27	7,9
E	.016	.021	.41	.53	2,9
F	.016	.019	.41	.48	3,9
G	.100	---	2.54	---	4
H	---	---	---	---	5
J	.029	.045	.74	1.14	8
K	.028	.034	.71	.86	
L	.009	.125	.23	3.18	
M	.1414 Nom		3.59 Nom		6
N	.0707 Nom		1.80 Nom		6

NOTES:

1. Metric equivalents (to the nearest .01 mm) are given for general information only and are based upon 1 inch = 25.4 mm.
2. Measured in the zone beyond .250 (6.35 mm) from the seating plane.
3. Measured in the zone .050 (1.27 mm) and .250 (6.35 mm) from the seating plane.
4. Variations on Dim B in this zone shall not exceed .010 (.25 mm).
5. Outline in this zone is not controlled.
6. When measured in a gaging plane .054+.001 (1.37 mm+.03 mm) below the seating plane of the transistor max dia leads shall be within .007 (.18 mm) of their true location relative to a maximum width tab. Smaller dia leads shall fall within the outline of the max dia lead tolerance.
7. All leads electrically isolated from case.
8. Measured from the maximum diameter of the actual device.
9. All 3 leads.

Figure 1. Outline and dimensions.

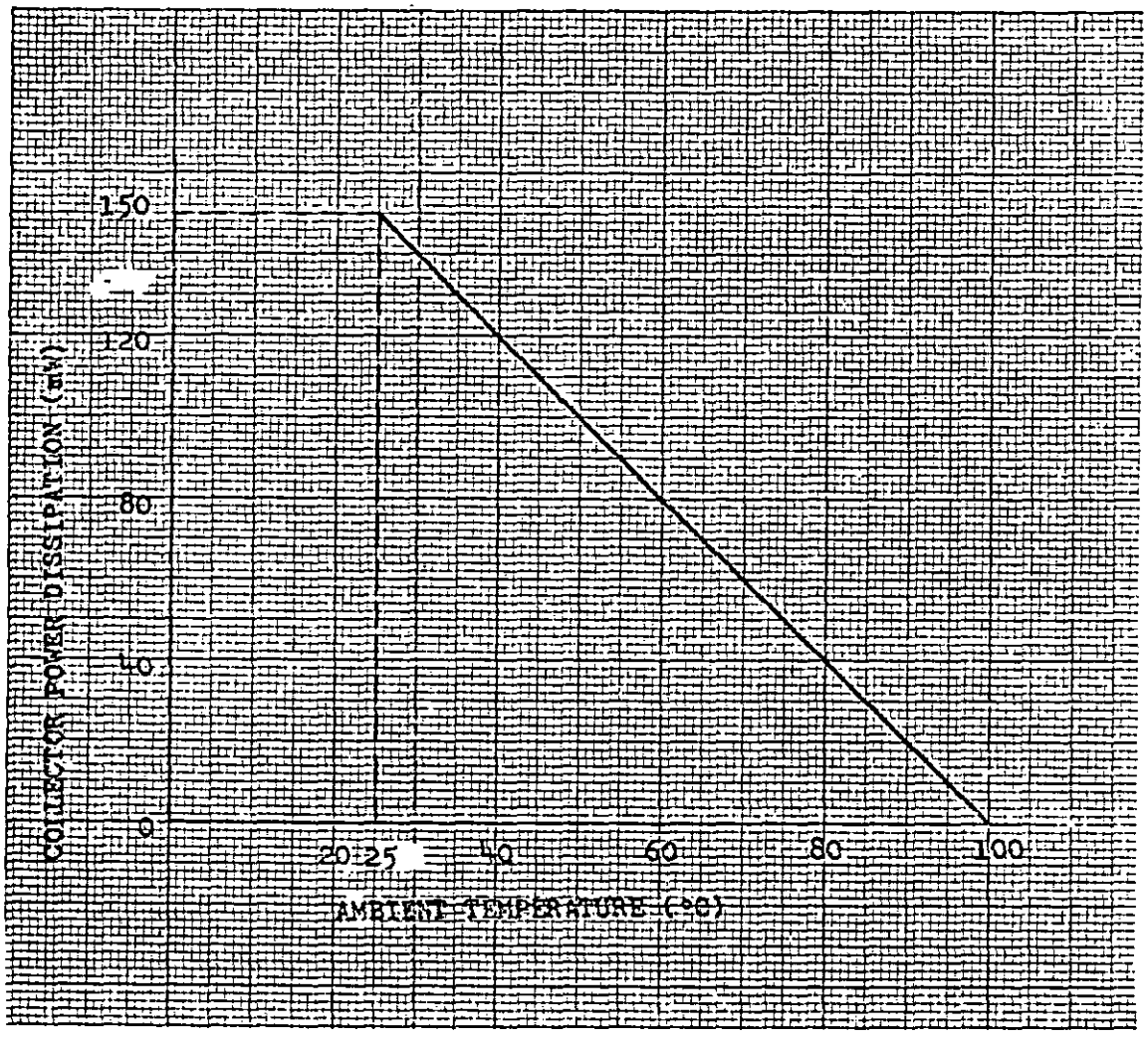

Figure 2. Power Derating nomograph.

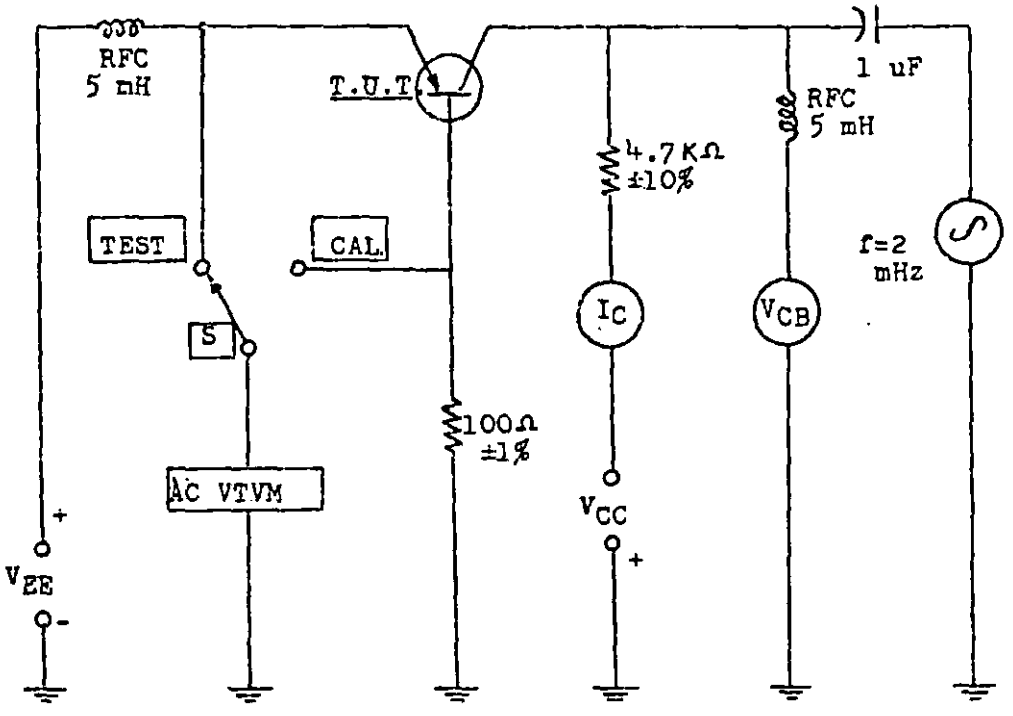

Test-Procedure Guidance Notes:

1. An equivalent circuit acceptable to Gov't inspector may be used.

2. Test computation shall be based upon the following formula:

$$r_b = 100 \times \frac{\text{Reading of AC VTVM with switch S in TEST position}}{\text{Reading of AC VTVM with switch S in CAL. position}} - 100$$

Figure 3. Base Spreading Resistance r_b test circuit.

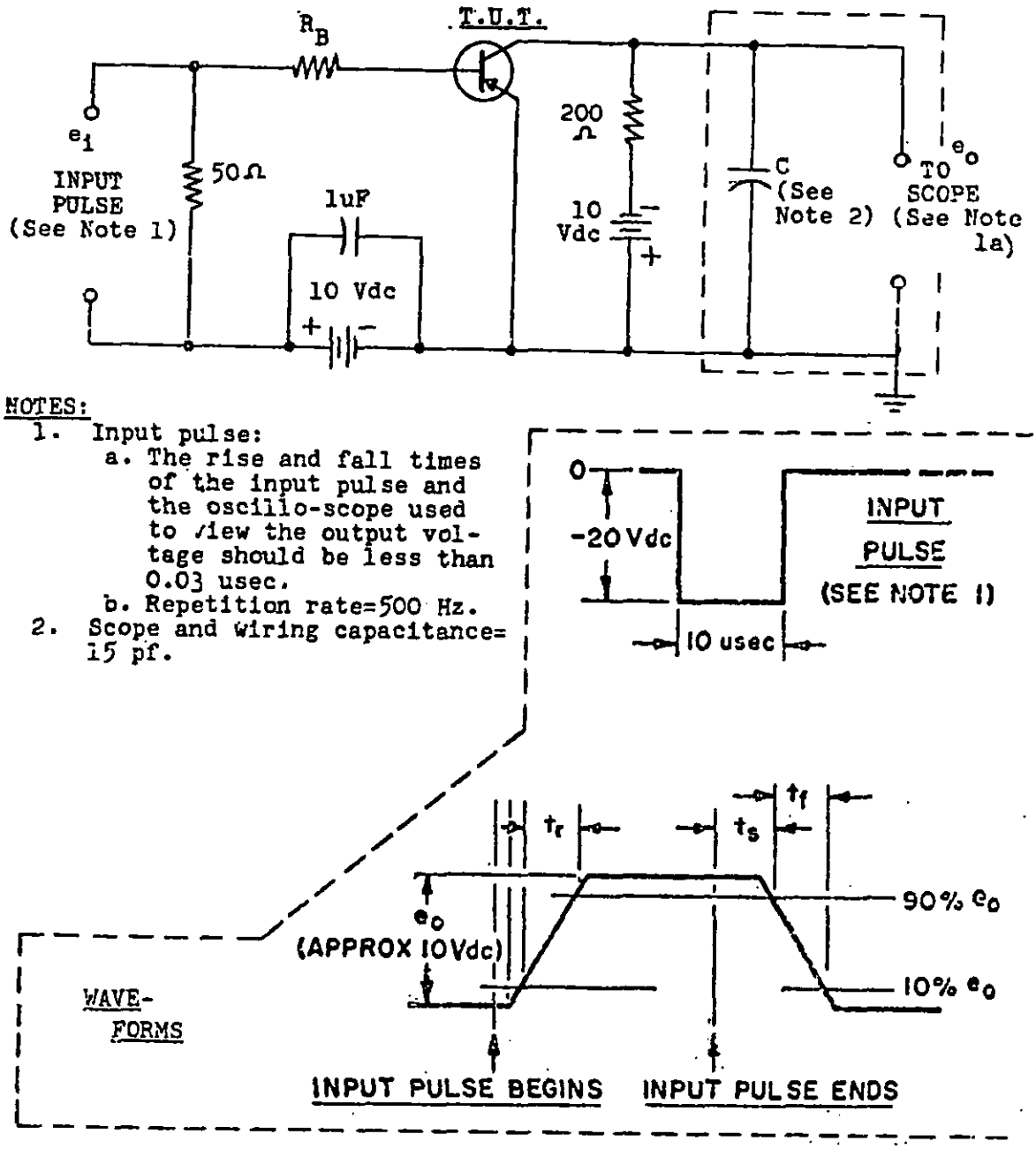

NOTES:

1. Input pulse:
   a. The rise and fall times of the input pulse and the oscillo-scope used to view the output voltage should be less than 0.03 usec.
   b. Repetition rate=500 Hz.
2. Scope and wiring capacitance= 15 pf.

Figure 4. Pulse-Response Test circuit.

5. PREPARATION FOR DELIVERY

5.1 Preparation for delivery.- Preparation for delivery and the inspection of Preparation For Delivery shall be in accordance with Specification MIL-S-19500.

6. NOTES

6.1 Notes.- The notes included in Specification MIL-S-19500, with the following additions or exceptions, are applicable to this specification.

6.2 Application guidance and supersession information.-

(a) The transistors conforming to requirements of this document issue are recommended as ready replacements (having superior-controlled characteristics) for the transistors covered by previous issue(s) of, respectively, this document and the following superseded documents, all as listed below:

MIL-T-19500/41A(Sig C), 26 Jan 1959--Transistor, Type 2N425

MIL-T-19500/42A(Sig C), 26 Jan 1959--Transistor, Type 2N426

MIL-T-19500/43A(Sig C), 26 Jan 1959--Transistor, Type 2N427

(b) To insure proper equipment-circuit application, particular attention should be given to the differential voltage-and-current requirements, ratings, and performance (gain and switching) characteristics pertinent to the individual transistor types covered herein.

6.3 Ordering data.-

(a) Terminal-lead length: See 3.3.2 herein.

6.4 Qualification.- With respect to products requiring qualification, awards will be made only for such products as have, prior to the time set for opening of bids, been tested and approved for inclusion in Qualified Products List (QPL)-19500, whether or not such products have actually been so listed by that date. Information pertaining to qualification of products covered by this specification should be requested from the Commanding General, U. S. Army Electronics Command, Fort Monmouth, New Jersey 07703, Attention: AMSEL-PP-EM-2.

6.5 Revision (document) changes.- Revision-letter symbols are not used in this revision to identify changes with respect to the previous issue, due to the extensiveness of the changes. (See 6.2a supersession information, above.)

Custodian:
Army-EL

Preparing activity:
Army-EL

Project No. 5961-A007

* U. S. GOVERNMENT PRINTING OFFICE-1967: 253-228X1444